UNITED STATES PATENT AND TRADEMARK OFFICE

BEFORE THE PATENT TRIAL AND APPEAL BOARD

APPLE INC.

Petitioner

v.

HAPTIC, INC.

Patent Owner

Case IPR2024-01475
Case IPR2024-01476
U.S. Patent 9,996,738

DECLARATION OF JASON JANÉT
(SUBMITTED WITH PATENT OWNER'S PRELIMINARY RESPONSE)

HAPTIC EX2001

TABLE OF CONTENTS

I. INTRODUCTION 5

II. BACKGROUND AND QUALIFICATIONS 5

III. LEGAL STANDARDS 17

A. Patentability 17

B. Prior Art 22

C. Inherency 22

D. Person of Ordinary Skill In The Art 23

E. Claim Construction 24

IV. BASES FOR OPINIONS 26

V. LEVEL OF ORDINARY SKILL IN THE ART 27

VI. CLAIM CONSTRUCTION 29

VII. OPINIONS ON PATENTABILITY OF THE CHALLENGED CLAIMS 30

A. Asserted Grounds 30

B. Technological Background 31

1. Vibration Detection and Sensor Technology 32

a. Vibration 32

b. Accelerometers and Piezoelectric Transducers 37

c. Accelerometer Mounting 39

2. The ’738 Patent 41

C. Ground 1A 46

1. Independent Claims 1 and 10 46

2. The Asserted References 49

a. Murakoshi 49

b. Stewart 51

3. Whether a POSITA would have considered the challenged claims obvious in view of Ground 1A (Murakoshi-Stewart) 56

a. Whether there was a Motivation to Combine and Reasonable Expectation of Success in Achieving the Claimed Invention 57

b. Analysis of Apple's Arguments and Evidence in Support of the Combination of Murakoshi-Stewart 60

i. Apple's Motivation to Combine Arguments and Evidence 60

ii. Apple's Reasonable Expectation of Success Arguments and Evidence 68

4. Whether Ground 1A Discloses or Suggests All Elements of the Challenged Claims 70

a. Independent Claim Elements [1b-v] and [10b-iv] 70

b. Independent Claim Elements [1e] and [10c] 72

c. Dependent Claims 75

D. Ground 1B 75

E. Ground 1C 75

F. Ground 2A 78

1. The Asserted References 78

a. iFixit 78

b. Li 79

2. Whether a POSITA would have considered the challenged claims obvious in view of Ground 2A (Li-iFixit) 84

a. Whether there was a Motivation to Combine or Reasonable Expectation of Success in Achieving the Claimed Invention 86

i. Whether a POSITA would have understood that Li's gesture detector could be positioned on the iPhone's logic board. 87

ii. Whether a POSITA would have understood that the detector could be indirectly mounted on the iPhone's logic board and successfully implement Li's method. 90

iii. Li's addition of its gesture detector to the iPhone despite the iPhone's existing accelerometer. 91

iv. Apple's inability to implement its "Back Tap" feature on the iPhone 6. 92

b. Analysis of Apple's Arguments and Evidence 95

i. Apple's First and Second Motivations 95

ii. Apple's Third and Sixth Motivations 96

iii. Apple's Fourth Motivation 104

iv. Apple's Fifth Motivation 104

v. Apple's Reasonable Expectation of Success Assertions ... 107

G. Ground 2B 109

VIII. CONCLUSION 110

I. INTRODUCTION

1. My name is Jason Janét. I have been retained as a technical expert by Haptic, Inc. ("Haptic") and asked to provide my objective and unbiased opinions concerning U.S. Patent No. 9,996,738 ("the '738 Patent"). Specifically, I have been asked to provide my opinions on the patentability of the challenged claims of the '738 Patent in view of the grounds advanced in the pending Petitions for *Inter Partes* Review filed by Apple, Inc. (Petitioner or Apple herein) for the '738 Patent (IPR2024-01075, IPR2024-01076), the state of the art at the time of the claimed inventions, and the knowledge of a person of ordinary skill in the art at the time of the claimed inventions.

2. I understand that this declaration will be filed as an exhibit to the Patent Owner's Preliminary Response in each of the referenced IPR proceedings.

II. BACKGROUND AND QUALIFICATIONS

3. In forming the opinions expressed in this Declaration, I have considered and relied upon my education, background, and experience. In addition, I have reviewed and relied upon additional materials in preparation of this Declaration, as described herein. I understand my curriculum vitae is being submitted with this declaration as an exhibit to the Patent Owner's Preliminary Response.

4. I currently serve as a Corporate Director for Applied Research Associates ("ARA"). I previously served ARA as Chief Technology Officer. I have

also held the rank of Adjunct Associate Professor at Duke University and at North Carolina State University. I hold active Top Secret (TS) and Sensitive Compartmentalized Information (SCI) security clearances.

5. I received a Bachelor of Science in Mechanical Engineering from the University of Virginia in 1990; a Master of Integrated Manufacturing Systems from the Integrated Manufacturing Systems Engineering Institute at North Carolina State University in 1994; and a Ph.D. in Electrical and Computer Engineering from North Carolina State University in 1998.

6. Since the 1980s, I have served in multiple capacities while designing, engineering, implementing and supporting automated systems, including integrated sensors, human-machine interfaces, and actuators.

7. In general, I have been active in the intelligent electromechanical systems field for decades. My Master's thesis, entitled Global Motion Planning and Self- Referencing for Autonomous Mobile Robots, leveraged graph theory, feedback and sensors to optimize mobile robot movement through, and perception of, environments. My Ph.D. dissertation, entitled Pattern Analysis, Tracking and Control for Autonomous Vehicles, leveraged multiple mobile robots, sensors, and neural networks to enhance simultaneous localization and mapping (SLAM), as well as the sharing of knowledge between multiple different mobile robots. I have

authored numerous publications and have co-authored a textbook entitled Computational Intelligence.

8. I have designed, built, and marketed robots, automated systems, toys, measuring systems and components thereof, including ground mobile robots, unmanned aerial vehicles ("UAVs"), unattended sensors, automated storage and retrieval systems (ASRS), submersible mobile robots, proof-of-concept extraterrestrial robots, manually manipulated ("twiddled") submersible foils, wall-climbing mobile robots, corner-grip shelving systems, proximity and ranging systems, point-cloud systems, pattern analysis tools, and augmented reality systems.

9. I have taught the following courses: Introduction to Robotics and Automation (Duke and NCSU, 1996-2016); Introduction to Control Theory (Duke and NCSU, 1999-2014); Distributed Real-Time Controls (NCSU, 1994-1998); and a myriad of courses in Mechanical Engineering, Biomedical Engineering, Electrical/Computer Engineering, Industrial Engineering and Systems Engineering. I have also served on several M.S.- and Ph.D.-level graduate student committees and qualifying exams, served on the NCSU IMSEI Board, and participated in curriculum development for undergraduate and graduate-level programs, including the NCSU B.S.- and M.S.-level Mechatronics curricula.

10. I have built, sponsored, and advised multiple champion student teams for international robot competitions including, but not limited to, the National

Aeronautics and Space Administration (NASA)/American Society of Civil Engineers (ASCE) Extra-Terrestrial Robotics Competition, the Defense Advanced Research Projects Agency (DARPA) Grand Challenge, the Association for Uncrewed Vehicle Systems International (AUVSI)/ the Office of Naval Research (ONR) Autonomous Underwater Vehicle Competition, and the European Climbing and Walking Robots (CLAWAR) Wall-Climbing Robot competition.

11. I have initiated multiple unmanned systems projects at both academic and industry levels. Academic UAVs include, but are not limited to, Quadcopters with Hybrid Remote and Autonomous Control, Marsupial UAVs that Deploy and Recover Unmanned Ground Vehicles, and Wall-Climbing UAVs. Additionally, the AngelFish Cross-Domain Submersible UAV, a DARPA anti-submarine warfare (ASW) program that I launched at Teledyne, included a partnership with North Carolina State University. UUVs include, but are not limited to, the MicroHunter-class of very small underwater robots; the PilotFish, Gamera, Artemis and other holonomic robots; submersible crawlers that are used in nuclear reactors, and the little benthic crawler (LBC1) hull inspection system; and the hull bio-inspired underwater grooming (HULLBUG) hull cleaning system. Unmanned ground vehicles include, but are not limited to, the miniature PERRY, wall-climbers, all-terrain and subterranean crawlers. Many of these have employed sensors including inertial measurement units, impact, proximity and ranging.

12. I have supported multiple toy-focused ventures with companies including, but not limited to, Marvel, Hasbro, Twidco, Spin Master, Nottingham-Spirk, IDEO, ARA, and other firms. For Marvel, multiple Spiderman toys were conceived and developed and validated, including the Spiderman Wall-Climbing Car, the Corner-Climbing Spider, and the Inflatable Wall-Climbing Spiderman. For Hasbro, a proprietary corner-gripping technology was employed to place basketball goals in corners. For Twidco, a proprietary flapping foil technology was combined with multiple fish shapes (e.g., shark and clownfish) to enable users to create fishlike motion by "twiddling" a connecting cable from above. For Spin Master and multiple design firms, multiple wall-climbing toys were developed for small wall-climbing robot concepts, including simple radio control vehicles and the "Hangtime 540" Tony Hawk aerial skateboard toy. For ARA, augmented reality systems for indoor and outdoor games were developed.

13. In 1999, while I was employed by Nekton Research ("Nekton"), I captured and managed multiple programs sponsored by the DoD and private-sector companies that focused primarily on AUVs, ROVs, TwiddleFish toys, and indirect-fire projectiles. During my tenure, Nekton entered into a joint venture agreement with the founders of what eventually became known as Parata Systems–a pharmacy automation solutions company, which I supported launching.

14. After leaving Nekton in March 2002, I joined a then New Jersey-based company called Avionic Instruments, Inc. ("Avionic"). While at Avionic, I continued developing and marketing robots and supported engineering related to various design, manufacturing, quality and assembly issues on the core aerospace product lines. Avionic product lines include, but are not limited to, ducted fans, transformer-rectifier units ("TRU"), regulated TRU (RTRU), auxiliary power unit ("APU") control systems, power distribution systems (PDUs), frequency converters, corner clamps, and VRAM attractors/thrusters. Customers included DoD, NASA, Boeing, Sikorsky, Augusta-Westland, Dassault, and Lockheed-Martin. During my tenure at Avionic, I supported multiple initiatives, including our FAA-compliant and MIL-Spec testing and qualification suite which relied on sensors for shock, vibration, temperature, salt, fog, spray radiated emissions, conducted emissions, etc.

15. At Avionic, I was also tasked with ruggedizing, optimizing, and commercializing two emerging proprietary technologies: the "CFG" and "VRAM". The CFG, short for Corner Friction Grip, was a proprietary technology based on non-marring and non-adhesive materials that provided optimal grip patterns on inside and outside corners. CFG formed the basis of a company called "Shelf Works Technologies," which was spun out of Avionic Instruments in 2004, and whose products were sold in Home Depot, Bed Bath and Beyond, Hammacher Schlemmer,

etc. CFG also formed the basis of multiple toys including a miniature basketball goal for Hasbro, and a corner-climbing Spiderman toy for Marvel.

16. The VRAM was a patented method for producing attraction forces between an object and a surface. VRAM is euphemistically referred to as a "tornado in a cup" and generally comprises both cylindrical and toroidal flow patterns that result in vacuum-like regions. The VRAM had several applications, including but not limited to: holding breaching charges and sensors against vertical or inverted surfaces; acting as an attractor for wall and ceiling climbing robots; acting as an attractor for submersible hull-crawling robots; filterless vacuuming (conceptually similar to the Dyson vacuum); and robotic pick-and-place end-effector (conceptually similar to a gripper) to move articles from one location (e.g., a conveyor) to another (e.g., a collator). The VRAM also formed the basis for multiple toys including: a wall-climbing car for Spin Master, IDEO and Nottingham-Spirk; a Spiderman car for Marvel; an inflatable wall-climbing Spiderman for Marvel; and the Tony Hawk Hangtime 540 aerial skateboard for IDEO.

17. My work with the filterless vacuum VRAM prompted me to explore a concept related to pharmacy automation, which ultimately led to a Ferris- wheel concept for rapidly dispensing pills. In mid-2003, my team conceived of two prescription pill counting mechanisms that actually benefited from centrifugal forces and optimally exploited gravity and vacuum: an inner ring with vacuum-based

apertures and an inner-bowl with vacuum-based apertures. The inner-bowl with vacuum-based apertures was deemed most viable, was awarded two U.S. patents, and to this day forms the basis of the RxMedic ADS™ pharmacy robot. The VRAM formed the basis of Vortex HC technologies, many of which have been licensed out to entities including, but not limited to, Teledyne SeaBotix, SeaRobotics, and HDT. Both RxMedic and Vortex HC were officially spun out of Avionic in July 2004, the date Avionic was acquired by Transdigm.

18. In late 2004, soon after Avionic was acquired, I, along with others from Avionic, secured funding to develop an alpha-level multi-dispenser pharmacy robotic system and develop the RxMedic business plan and raise multiple rounds of venture capital. In late 2006, RxMedic (called "APDS" until November 2006) was launched as a stand-alone, sole-focus venture. After the operational launch of RxMedic, I served as General Manager and eventually Chief Technical Officer. Through my roles at RxMedic, I oversaw the development of the RxMedic ADS robot, managed the intellectual property portfolio, coordinated sales and marketing, and provided strategic, fiscal, and operational leadership. The RxMedic ADS is an AS/RS that prepares prescriptions by the storage, retrieval and bundling of bottles/vials, labels, oral solid medications, caps and quality assurance imaging (generally within retail, hospital and mail-order settings). In May 2010, J.M. Smith Corporation acquired RxMedic, and to assist in the change of ownership, I served as

a Director of Robotics until May 2011. During my tenure at RxMedic, under J.M. Smith's ownership, I supported the evaluation, development and integration of a high-volume AS/RS system at the Smith Drug wholesale distribution center in Spartanburg, South Carolina. This AS/RS system comprised a broad spectrum of interoperating robotic systems including mobile, pick-and-place, conveyor, and others.

19. Also in late 2004, after Avionic was acquired, I, along with others from Avionic, secured funding for Vortex HC through DoD contracts and robot sales, to continue developing the VRAM Mobile Robot Platform (VMRP – a wall-climbing robot), the ARTEMIS AUV (a holonomic submersible robot for counter-mine and counter-obstacle operations), the submersible crawler, the nuclear-grade boiler water reactor (BWR) inspection robot, and other robot products centered around the VRAM. Some DoD programs were/are classified, for which I maintained a SECRET clearance at both the personal and facilities level, and served as the facilities security officer (FSO). In late 2006, corresponding to the full launch of RxMedic, Vortex HC technologies were largely licensed to Teledyne SeaBotix, SeaRobotics, and HDT. However, I have continued to support Vortex HC licensees and customers to-date.

20. After the sale and transition of RxMedic I joined Teledyne Technologies in Summer 2011. I served as the Senior Manager for the RTP division of Teledyne Scientific, and supported multiple DoD-sponsored robotic-focused

programs. Some of these programs were/are classified, for which I maintained a personal SECRET clearance.

21. Among these programs were cargo unmanned ground vehicles (CUGV); squad-level autonomous unmanned ground vehicles (UGV); AUVs; UUVs; a cross-domain autonomous vehicle capable of transitioning between air, surface, and underwater-domains; the EXtreme ACcuracy Tasked Ordnance (EXACTO) program for optically tracking and steering bullets to targets; and light detection and ranging (LIDAR) systems for UGVs, as well as the mapping of urban and subterranean environments (along with sister-company Optech); and technologies for AS/RS, industrial automation and inspection systems with/for strategic partner Rockwell Automation (previous owner of what became the Teledyne Scientific & Imaging business unit). These systems employed inertial, shock and contact/vibration sensors.

22. Cross-domain vehicles that were evaluated, designed, and prototyped included, but were not limited to: the AngelFish (later called "EagleRay") cross-domain submersible UAV for anti-submarine warfare, as well as a ball-shaped robot for beach, ground, and surf-zone countermine operations. Sensor design, refinement and signal processing was a major component of each program. Sensors employed include, but are not limited to, proximity sensors; ranging sensors; electro-optical imaging; LIDAR; long-, short- and mid-wave infrared (IR); inertial measurement

units (IMU); optical flow; and radio-frequency (RF). Additionally, control systems were designed, refined and integrated into the aforementioned systems. Most control systems were closed-loop, in that they utilized sensor-based feedback; others were open- loop, where states were estimated with little or no feedback.

23. In late 2013, Avionic, a TransDigm business unit at that point, requested that I return to turn around both a supply-chain issue and the Sikorsky S97 ("S97") Raider/JMR helicopter programs. The S97 Raider was designed to be the fastest, most maneuverable helicopter, due to its coaxial, counter- rotating variable-pitch wings, and an aft-based push-propeller. Avionic also controlled two business units named Acme Aerospace ("Acme") and Aerospace Cooling Solutions ("ACS"). Avionic, Acme and ACS supported the S97 program, which ultimately met milestones and continues to produce multiple successful demonstrations. In 2013, TransDigm expanded my role to include directorship of the Avionic, Acme and ACS revenue and engineering teams, and to report operational and financial status at six-week intervals.

24. Starting in late 2014, as CEO of Delta Five, I led a private-equity backed, hospitality focused venture, coordinating the company's launch and strategic path including an early-stage pivot. Initially focused on back-end robotics, AS/RS and general automation, Delta Five augmented its focus to address the rampant bed bug problem—a top priority for hoteliers—with a novel unattended

sensor and trap, called the Telemetered Pest Monitoring System (TPMS), which is based on computer vision, IoT, and software as a service (SaaS); it has proven capable of scaling to other pests. In addition to the TPMS, Delta Five developed a novel means to mass produce a natural, unscented aggregation pheromone that, in concert with placement and heat, lured invertebrates to the TPMS. After leading Delta Five and serving on its Board for four years, I resigned to join ARA, but continue serving Delta Five as a share-holder and transition agent.

25. In 2018, I joined ARA as CTO. My primary responsibilities include leading the commercialization and technology transition efforts, which require technical, business and corporate development, as well as the procurement of capital and managing matrixed rosters. Core technologies include, but are not limited to, energy, alternative fuels, biotechnology, robotics, autonomous systems, artificial intelligence, machine learning, non-destructive inspection/evaluation, medical devices/systems, augmented reality, situational awareness, diversionary devices, advanced hearing protection, tactical assault kits (TAK), ballistic gear, directed energy weapons, unattended sensors, risk analysis, etc. Many of these systems are based on smartphones (Android and iOS), and utilize various internal and external sensors. I currently hold a Top-Secret security clearance with Sensitive Compartmented Information (TS/SCI).

26. I have no financial interest in Haptic or the ’738 Patent. I am being compensated for my time spent in connection with these proceedings at my standard hourly rate. I am also being reimbursed for reasonable expenses, such as travel expenses. My compensation is not contingent on my opinions, on the outcome of any matter, or on any of the technical positions I explain in this declaration.

III. LEGAL STANDARDS

27. I am not an attorney. For purposes of this Declaration, I have been informed about certain aspects of the law that are relevant to my opinions, as set forth below.

A. Patentability

28. I understand that for an invention claimed in a patent to be valid and patentable, it must be, among other things, new and not obvious in light of what was known and came before it. That which was known or came before the invention claimed is generally referred to as “prior art.”

29. I understand that there are two ways in which prior art may render a patent claim unpatentable. First, the prior art can be shown to “anticipate” the claim. Second, the prior art can show that the claim was obvious to a person of ordinary skill in the field of the invention at the time the invention was made.

30. I understand that, for a patent claim to be “anticipated” by the prior art, each and every element or requirement of the claim must be found, expressly or

inherently, in a single prior art reference. Further, I understand that anticipation requires that the single prior art reference must disclose the elements of the claim arranged or combined in the same way as in the claim.

31. It is my understanding that whether a claimed invention is obvious is a question of law, with underlying factual inquiries that are determined from the perspective of a person of ordinary skill in the art at the time of the claimed invention.

32. It is my understanding that a claimed invention is obvious if the differences between the claimed invention and the prior art are such that the claimed invention as a whole would have been obvious before the effective filing date of the claimed invention to a person having ordinary skill in the art (a "POSITA").

33. It is my understanding that obviousness requires consideration of the following underlying factual inquiries:

- determining the scope and content of the prior art
- ascertaining the differences between the claimed invention and the prior art;
- resolving the level of ordinary skill in the art; and
- evaluating objective evidence or "secondary considerations" of non-obviousness, such as commercial success, long-felt but unresolved needs, failure of others, industry praise, and unexpected results.

34. It is my understanding that a reference must be analogous art to the claimed invention in order to be properly considered for use in an obviousness inquiry. It is my understanding that a reference is analogous art to the claimed invention if:

- The reference is from the same field of endeavor as the claimed invention (even if it addresses a different problem); or
- The reference is reasonably pertinent to the problem faced by the inventor (even if it is not in the same field of endeavor as the claimed invention).

35. It is my understanding that whether a reference is reasonably pertinent turns on how the problem faced by the inventor is reflected, either explicitly or implicitly, in the specification.

36. It is my understanding that the following are exemplary rationales that may support a conclusion of obviousness:

- Combining prior art elements according to known methods to yield predictable results;
- Simple substitution of one known element for another to obtain predictable results;
- Use of known techniques to improve a similar method or product in the same way;
- Applying a known technique to a known method or product ready for

improvement to yield predictable results;

- Obvious to try – choosing from a finite number of identified, predictable solutions, with a reasonable expectation of success;
- Known work in one field of endeavor may prompt variations of it for use in either the same field or a different one based on design incentives or other market forces if the variations are predictable to one of ordinary skill in the art; and
- Some teaching, suggestion, or motivation in the prior art that would have led one of ordinary skill to modify the prior art reference or to combine prior art reference teachings to arrive at the claimed invention.

37. In addition to the above, I understand that a person of ordinary skill in the art may resort to logic, judgment and common sense available to him or her at the time of the invention to find a claim feature obvious, even if the prior art relied on does not explicitly state or teach that feature. I understand that when common sense is relied on to find a feature obvious, the reasoning for that conclusion must be articulated with sufficient clarity.

38. I also understand that a patent claim is not proved obvious merely by demonstrating that each of its elements was, independently, known in the prior art. An obviousness determination requires finding both that a skilled artisan would have been motivated to combine the teachings of the prior art references to achieve the claimed invention, and that the skilled artisan would have had a reasonable

expectation of success in doing so. I understand that it is important to be careful not to allow hindsight reconstruction of references to produce the claimed invention, without any explanation as to how or why the references would be combined to produce the claimed invention.

39. Regarding "objective evidence" or "secondary considerations," I understand that for such evidence to be relevant to the obviousness of a claim, there must be a causal relationship (called a "nexus") between the claim and the evidence. I also understand that such objective evidence may include: commercial success of products covered by the patent claims; long-felt need for the invention; failed attempts by others to solve the problem addressed by the invention; copying of the invention by others in the field; unexpected results achieved by the invention; praise of the invention; the taking of licenses under the patent by others; expressions of surprise by experts and those skilled in the art at the making or use of the invention; and that the patentee proceeded contrary to the accepted wisdom of the prior art.

40. I understand that a person of ordinary skill is also a person of ordinary creativity. I further understand that the obviousness analysis need not seek out precise teachings directed to the specific subject matter of the challenged claim, but instead can take into account "ordinary innovation" that does no more than yield predictable results, which are inferences and creative steps that a person of ordinary skill in the art would be understood to employ.

41. I understand that sometimes it will be necessary to look to interrelated teachings of multiple patents and publications; the effects of demands known to the relevant field or present in the marketplace; and the background knowledge possessed by a person having ordinary skill in the art. I understand that all these issues may be considered to determine whether there was an apparent reason to combine the known elements in the fashion claimed by the patent at issue.

B. Prior Art

42. I understand that for purposes of this proceeding, prior art includes patents and printed publications in or outside the United States before the effective filing date of the claimed invention. I also understand that prior art includes U.S. patents, published U.S. patent applications, and published international applications (pursuant to the Patent Cooperation Treaty) that themselves have an effective filing date before the effective filing date of the claimed invention, as long as they name another inventor.

C. Inherency

43. I understand that if a prior art reference does not expressly set forth a particular claim element, the prior art may still disclose that element if it is "inherent" in its disclosure. To establish inherency, it is my understanding that evidence must make clear that the missing descriptive matter is necessarily present in the thing described in the reference. It is my understanding that inherency may not be

established by probabilities or possibilities. In other words, it is my understanding that the mere fact that a certain thing may result from a given set of circumstances is not sufficient to establish inherency.

44. I understand that under the principles of inherency, if a prior art device, in its normal and usual operation, would necessarily perform a claimed method, then the method will be considered to be anticipated by the prior art device. I also understand that when the prior art device is the same as a device described in the specification for carrying out the claimed method, it can be assumed the device will inherently perform the claimed process.

D. Person of Ordinary Skill In The Art

45. I understand that "a person of ordinary skill in the art" or POSITA is a hypothetical person who is presumed to have known the relevant art at the time of the invention. Such a person would necessarily have the capability of understanding any scientific and engineering principles applicable to the pertinent art.

46. I understand that factors that may be considered in determining the level of ordinary skill in the art include, but are not limited to, the following:

a. the educational level of the inventor;

b. the type of problems encountered in the art;

c. prior art solutions to those problems;

d. the rapidity with which innovations are made;

e. the sophistication of the technology; and

f. the educational level of active workers in the field.

47. I understand that a person of ordinary skill in the art is not a real person, but rather is a hypothetical individual having the qualities reflected by the factors above. This hypothetical person has knowledge of all prior art in the relevant field as if it were arranged on a workshop wall and takes from each reference what it would teach to a person of ordinary skill in the art.

48. I understand that a person of ordinary skill in the art is a person of ordinary creativity, not an automaton. In many cases a person of ordinary skill will be able to fit the teachings of multiple prior art references together like pieces of a puzzle.

49. I understand that a person of ordinary skill in the art can collaborate with one or more other persons of ordinary skill in the art for one or more aspects with which the other person may have superior expertise, experience, and/or knowledge.

E. Claim Construction

50. It is my understanding that claim construction, or the interpretation of the claims of a patent, is ultimately a question of law. I have been informed that

claim terms are generally presumed to carry their ordinary and customary meaning. However, I understand that a patent applicant is his own lexicographer and is entitled to provide alternate definitions of words in common usage, but if the patent applicant uses a term that is in common usage without providing an alternate definition, then that term should generally be understood as having its common meaning.

51. I understand that a person of ordinary skill in the art is deemed to read a claim term not only in the context of the particular claim in which the disputed term appears, but in the context of the entire patent specification and the "file history" of the patent developed during examination by the Patent Office.

52. I understand that the claims, the specification, and the file history are referred to as "intrinsic evidence," and are to be read as a person of ordinary skill in the art at the time of the invention would have done at the time of the alleged invention.

53. In addition to the intrinsic evidence, I understand that the court or tribunal may also consider other relevant evidence, which is called "extrinsic evidence," concerning relevant scientific principles, the meaning of technical terms, and the state of the art. Such evidence includes the testimony of qualified expert witnesses. Although extrinsic evidence may be used to resolve ambiguities that may exist after reviewing the intrinsic evidence, I understand that extrinsic evidence

cannot be used to contradict a claim construction that is clear from the intrinsic evidence.

54. I understand that some claims are independent, and that those independent claims are complete by themselves. Other claims refer to these independent claims, or other dependent claims, and are "dependent" on those claims. The dependent claims include all of the limitations of the claims on which they depend.

55. I understand that an element in a claim may be expressed as a means or step for performing a specified function without the recital of structure, material, or acts in support thereof, and such claim shall be construed to cover the corresponding structure, material, or acts described in the specification and equivalents thereof.

IV. BASES FOR OPINIONS

56. The opinions set forth in this Declaration are my own. In forming the opinions herein, I have considered the exhibits to the Petitions for *Inter Partes Review* filed in the IPR proceedings referenced above, as well as the additional materials cited in this Declaration (including the exhibits to the Patent Owner's Preliminary Response cited herein), and my education, training, and experience.

57. My analysis of the materials relating to this matter is ongoing and I will continue to review any new material that is provided to me. This Declaration represents certain opinions that I have formed to date and the bases for those

opinions. I reserve the right to revise, supplement, and/or amend my opinions based on new information presented to me and on my continuing analysis of the materials cited herein or later provided to me.

V. LEVEL OF ORDINARY SKILL IN THE ART

58. I understand that Apple's expert, Dr. Benjamin Bederson, provides his opinion that a POSITA:

> "would have had a bachelor's degree in computer science, computer engineering, or a related field, and at least two to three years of practical computer programming or engineering experience, including experience developing user interface technologies. Additional graduate education could substitute for years of experience, or significant experience in the field could substitute for formal education. For example, a person with multiple years of experience in building or designing computer-human interfaces might be a POSITA despite not having formal education, because significant experience can substitute for education.
>
> The POSITA described above would be capable of performing various design tasks related to systems that allow humans and computers to interact and would understand the basic structural and software components required to implement a human-computer interface. The POSITA would have at least a basic knowledge of how machines include electronics and circuitry to communicate with one another (for example in a "smarthome"

> device or virtual assistant). For example, this would include capabilities of well-known processors, sensors for input and actuators and displays for output, and how they worked together. From their education and/or experience, a POSITA would have a basic understanding of how to implement software or code including algorithms in a device to use those processors and sensors to receive user inputs of various types and to translate the user inputs into actions of the device."

IPR2024-01475, APPLE-1003 ¶¶ 30-31; IPR2024-01476, APPLE-1003 ¶¶ 30-31.[1]

---

[1] Going forward, for ease of reference, APPLE-1003 filed in IPR2024-01475 will be referred to as "1475-1003" and APPLE-1003 filed in IPR2024-01476 will be referred to as "1476-1003." To the extent there are differences in exhibits between the two petitions that share the same exhibit number, I will include a similar prefix indicating the particular proceeding followed by the exhibit number. If there are no differences in the exhibit and exhibit number between the two petitions, or if an exhibit was included in only one proceeding, I will simply use Apple's designation for the exhibit. Similarly, citations to the different petitions will use "1475-Petition" and "1476-Petition" for the petitions in IPR2024-01475 and IPR2024-01476, respectively. For Grounds 2A and 2B, which are not asserted in IPR2024-01476, I will simply refer to the Petition (in IPR2024-01475) and use Apple's designation for the exhibits in that proceeding.

59. I have not been asked to provide an opinion regarding the appropriate level of skill in the art at this time. I do believe that education and experience in the fields of electrical and mechanical engineering would also serve to qualify one as a POSITA, even using the balance of Dr. Bederson's proposed level of skill. I also believe that specific experience in the use of accelerometers and other types of vibration sensors, including considerations of their mounting design for specific applications, is particularly relevant given the disclosure of the '738 Patent and particular prior art references asserted by Apple (e.g., APPLE-1006, APPLE-1008).

60. My education and experience exceed that of a POSITA as described in Section II above, and qualify me to testify as to the knowledge of a POSITA under any reasonable definition.

61. With these understandings, my testimony herein relates to the knowledge and understanding of a POSITA as of February 13, 2015. I understand this is the "Critical Date" of the inventions applied by Apple and Dr. Bederson, and have been asked to use this date for the purposes of my testimony.

VI. CLAIM CONSTRUCTION

62. I understand that the parties have agreed that several claim terms are "means plus function" claim terms that express claim elements as a means for performing a specified function without the recital of structure, material, or acts in

support thereof, and such claim shall be construed to cover the corresponding structure, material, or acts described in the specification and equivalents thereof.

63. I have considered the parties' differing constructions as set forth in the Petitions. 1475-Petition, 5-9; 1476-Petition, 6-9.

64. In my opinion, it is not necessary to resolve any of the differences in constructions proposed by Apple and Haptic to resolve the issues presented in the Petitions. To the extent I subsequently determine that such differences should be addressed, or am asked to provide an opinion by Haptic, I will carefully consider the intrinsic evidence and any relevant extrinsic evidence and provide my opinion regarding the construction of any relevant terms.

VII. OPINIONS ON PATENTABILITY OF THE CHALLENGED CLAIMS

A. Asserted Grounds

65. I understand that in IPR2024-01475, Petitioner asserts five grounds (1A, 1B, 1C, 2A, 2B), and in IPR2024-01476, Petitioner asserts three grounds (1A, 1B, 1C). 1475-Petition, 10; 1476-Petition, 10.

66. Grounds 1A-1C in both Petitions rely on the combination of Murakoshi (U.S. Patent Application Publication No. 2014/0191963, APPLE-1004) and Stewart (U.S. Patent No. 4,744,249, APPLE-1006). 1475-Petition, 10; 1476-Petition, 10.

67. Grounds 2A-2B in IPR2024-01475 relies on the combination of Li (U.S. Patent Application Publication No. 2015/0123949, APPLE-1008) and iFixit

(referenced by Apple as "iFixit iPhone 6 Teardown Report" in its exhibit list, APPLE-1010). 1475-Petition, iii, 10.

68. I understand that in IPR2024-01475, Ground 1A is asserted to render claims 1-2 and 8-10 obvious; Ground 1B is asserted to render claims 1-2, 4-5, and 8-11 obvious; and Ground 1C is asserted to render claims 1-2, 4-5, and 8-11 obvious. 1475-Petition, 10. In IPR2024-01476, Grounds 1A-1C are all asserted to render claims 3, 6-7, and 12-13 obvious. 1476-Petition, 10.

69. My opinions do not encompass all aspects of the asserted grounds or all challenged claims. To the extent one or both Petitions are granted I may provide additional opinions addressing these, or any other aspects of the asserted grounds and the challenged claims.

B. Technological Background

70. Before addressing the specific grounds asserted by Petitioner, I provide a brief background of the invention and embodiments of the '738 Patent and specific aspects of vibration and sensor technology relevant to issues raised in the Petition.

1. Vibration Detection and Sensor Technology

a. Vibration

71. A physical impact on a surface transmits vibrations in the form of mechanical waves, spanning a range of frequencies. Ex. 2004,[2] 2-3 (showing examples of mechanical waves and explaining that "In general, mechanical waves are waves that require a medium to travel"); *id*. at Ex. 2005 at 1 (explaining that acoustics is a science defined as the "generation, transmission, and reception of energy as vibrational waves in matter" and that "When the molecules of a fluid or solid are displaced from their normal configurations, an internal elastic restoring force arises. It is this elastic restoring force, coupled with the inertia of the system, that enables matter to participate in oscillatory vibrations and thereby generate and transmit acoustic waves"); *id.* at 382 (explaining that sound—a mechanical wave—

---

[2] Ex. 2004 is a series of screenshots of a series of related webpages from the Iowa State University Center for Nondestructive Evaluation, available at www.nde-ed.org/Physics/Waves (with appended webpages from the same publisher explaining its mission and providing website details). The publisher states that the site was original created "in the early 2000's" and was renovated and updated in 2021. Ex. 2004 at 64. Although the site as it exists now was not available as of the Critical Date, the information from the exhibit cited herein is consistent with the knowledge of a POSITA as of the Critical Date.

is transmitted through a solid when it causes the surface to vibrate, which is then transmitted through the structure); Ex. 2006, 22 (explaining that an impact applied to a structure provides a force impulse which causes mechanical waves). When these waves travel through and between materials, they lose energy due to internal properties. Ex. 2004, 20 (explaining that waves are partially reflected and transmitted due to material properties), 23 ("When a wave travels through a medium, its intensity diminishes with distance. … Natural materials … all produce an effect which further weakens the wave", 39 ("Waves are reflected at boundaries …."). This is due to several factors. Internal friction (the resistance to motion of the elements within the material) causes energy loss due to the material's microstructure, which absorbs the vibrations in the form of heat. Ex. 2007 at 421-422 ("As the stress wave propagates … the energy of the propagating wave decreases with increasing path length. The decrease in wave energy is the result of attenuation and divergence, caused by the absorption and scattering of the wave energy. Absorption is the result of converting the stress wave energy into heat, caused by friction as a result of particle movement."); *see also* Ex. 2005 at 234, 238. Scattering, caused by internal inhomogeneities, causes deflection of vibration waves in different directions, diminishing forward energy. Ex. 2007 at 421-422 ("The decrease in wave energy is the result of attenuation and divergence, caused by the absorption and scattering of the wave energy…. Scattering … is a result of wave reflection, refraction,

diffraction, and mode conversion owing to dissimilar materials, microcracks and air voids."); Ex. 2005 at 234 (explaining that acoustic wave energy is lost due to absorption—"the conversion of acoustic energy into thermal energy" and scattering – "the reradiation of the incident acoustic energy out of the incident beam"), 238 (explaining that sound waves can be attenuated by reflection, refraction, absorption, and scattering). This energy loss is called attenuation or damping. Ex. 2004, 23 ("The combined effect of scattering and absorption is called attenuation."), 33 (explaining that a decrease in wave amplitude creates a "dampened wave").

72. Attenuation/damping can reduce a wave's energy to the point where it is no longer detectable, limiting the distance the wave can travel. Ex. 2007 at 421. The farther a wave must travel through a material, and the more discontinuities the wave encounters, the more the wave will be attenuated. *Id.*, 421-422. This is why a room with thicker walls (or walls made of denser materials) is better able to dampen noise than a room with thinner walls. *See, e.g.*, Ex. 2005 at 340.

73. At interfaces between materials (whether different materials, such as air and metal, or between two pieces of the same material), disparities in composition, density, and structure also attenuate or dampen vibrational waves. Ex. 2004, 34 (explaining that when a wave passes through an interface between two materials at an oblique angle, and the materials have different refraction indices, it reflects the wave and changes its direction due to the different velocities of the waves

within the materials, which is due to the material properties); Ex. 2005, 149. This is known as impedance mismatch. Ex. 2004, 39 ("Waves are reflected at boundaries where there is a difference in impedances (Z) of the materials on each side of the boundary. This difference in Z is commonly referred to as the impedance mismatch. The greater the impedance mismatch, the greater the percentage of energy that will be reflected at the interface or boundary between one medium and another."), 52-53 ("the amount of the wave that reflects from a defect is also dependent on the impedance mismatch between the flaw and the surrounding material. A void is generally a better reflector than a metallic inclusion because the impedance mismatch is greater between air and metal than between two metals. Often, the surrounding material has competing reflections. Microstructure grains in metals and the aggregate of concrete are a couple of examples."); Ex. 2007 at 523 (noting "the enormous acoustic impedance mismatch between concrete and air" that "poses a barrier to waves passing this boundary in either direction" and explaining that "On its path into the concrete and then back into the air, most of the emitted energy will be reflected and only a very small fraction of it remains to be measured."). The more discontinuities a wave encounters, the more it will be damped. Ex. 2004, 52-53.

74. Flexible materials (e.g., rubber gaskets, foam noise insulation, cork) were conventionally known to reduce vibrations by absorbing and dissipating energy. *See* Ex. 2005 at 340 (classifying sound absorbers, including porous materials

such as acoustic tiles which "are networks of interconnected pores within which viscous losses convert acoustic energy into heat" and explaining that "The absorptivities increase with increasing material thickness"), 363 (discussing sound insulation); Ex. 2008,[3] 1 (explaining that a gasket can reduce transmission of vibrations and noting that silicone rubber, among other materials, effectively attenuate vibration). This is because of the impedance mismatch created by applying such materials, and because these materials possess high internal friction and porous or irregular structures which cause scattering. Ex. 2005 at 340. Due to these properties, flexible materials were typically employed to isolate or dampen vibrations. Thus, it was not known, or (given that I, unlike the hypothetical POSITA, do not have perfect knowledge of all relevant prior art) certainly not practiced to use different flexibilities between materials, which would have been expected to introduce impedance mismatches and thus attenuate vibrations, to actually reduce damping. If it was known, it was certainly not within the knowledge of one having only ordinary skill in the art.

---

[3] Ex. 2008 is a current blog page from a custom gasket and seal supply company. It is consistent with the knowledge of a POSITA before the Critical Date.

b. Accelerometers and Piezoelectric Transducers

75. Accelerometers are a category of sensor used to measure acceleration, serving two primary purposes. One is detecting orientation or motion of an object, which can be used to infer an object's orientation or trajectory, such as in guided missile navigation or a smartphone's rotation between portrait and landscape mode. *See* Ex. 2010, 1-2. The second is to detect vibrations. Ex. 2011, 1. Generally, detecting vibrations requires high responsiveness to fast oscillations (hundreds to thousands of oscillations per second), as opposed to the slower accelerations relevant to orientation/motion tracking.

76. Generally speaking, accelerometers rely on a proof mass—a small, movable mass suspended within the sensor. When an accelerometer experiences acceleration, the proof mass within it displaces relative to the sensor's housing, and this displacement is used to measure the applied force. However, the specific mechanism to measure this displacement varies between types of accelerometers.

77. MEMS (Micro Electro-Mechanical System) accelerometers, commonly used in consumer devices, typically utilize capacitive sensing. Ex. 2009, 2; Ex. 2010 at 1-2. The proof mass is typically mounted on a flexible beam fixed to the accelerometer housing. Acceleration flexes the beam and displaces the mass itself relative to the housing. This displacement is measured through the change in capacitance between the proof mass and the accelerometer frame, which is used to

determine acceleration. Because they are compact and power-efficient, they were ideal for small, battery-powered devices. Ex. 2009, 1; Ex. 2010, 1.

78. In piezoelectric accelerometers, acceleration causes the proof mass to exert a force on a piezoelectric material. Ex. 2011, 1. Such materials are called transducers because they convert mechanical energy (pressure) to electric energy. The piezoelectric material converts the pressure exerted on it to a proportional electrical signal, which is used to measure acceleration. *Id.*; Ex. 2012, 4; *see also* 1475-1003 ¶ 41; 1475-1003 ¶ 41. While effective, piezoelectric accelerometers typically have a relatively large form factor and higher power requirements than MEMS accelerometers, due in part to the requirement that they contain a substantial proof mass and due to the inclusion of the piezoelectric element. Ex. 2009, 1; Ex. 2013, 1; Ex. 2015,[4] 4-5. This has limited their use in mobile devices. They were commonly used in industrial applications where these constraints are less critical.

79. The piezoelectric transducer that is contained within a piezoelectric accelerometer is not itself an accelerometer. Ex. 2012, 4-5. However, a transducer can be independently used to detect vibration. This is because a piezoelectric

---

[4] Ex. 2015 is a series of screenshots of a current webpage. Except as discussed below, the general information cited here is consistent with the knowledge and understanding of a POSITA before the Critical Date.

transducer deforms or bends in response to vibrational waves. Ex. 2014, 2. This deformation results in an electrical signal proportional to the mechanical force of the wave. Ex. 2011, 1; Ex. 2012, 5; *see also* APPLE-1008, Figs. 6-7.

80. Examples of piezoelectric transducers, piezoelectric accelerometers, and MEMS accelerometers are shown below:

Piezoelectric Transducers	Piezoelectric Accelerometers	MEMS Accelerometers
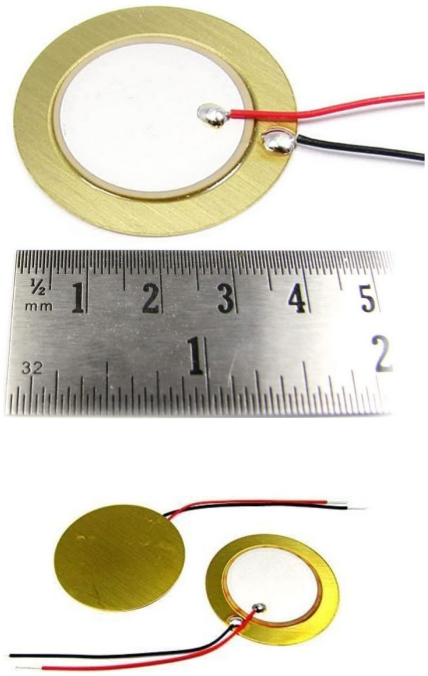		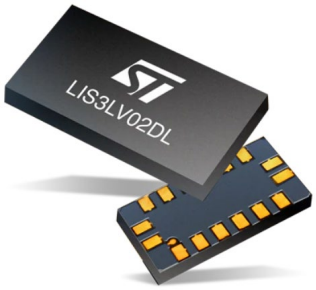

c. Accelerometer Mounting

81. Mounting accelerometers was known to be highly variable and goal-specific. *See, e.g.*, Ex. 2010, 3, Ex. 2011, 2; Ex. 2012, 18-19, 21. In some cases, design objectives required increasing the damping of an accelerometer's mount

relative to its housing and to the underlying surface. Examples include seismic monitoring (where the mounting is designed to filter out waves not attributable to seismic activity), automotive crash testing (where damping prevents sensor overloading), and inertial navigation systems. *See, e.g.*, Ex. 2010, 1.

82. In certain applications, minimizing damping was critical to allow the accelerometer to accurately detect external vibrations. Accelerometers were often rigidly mounted to their surfaces, but not all such mountings were equally effective; the employed method must be tailored to align with the specific design goal and purpose. *See* Ex. 2010, 3, Ex. 2011, 2; Ex. 2012, 18-19, 21; Ex. 2015, 28-29; Ex. 2017, 2, 4. Indeed, well after the Critical Date, one manufacturer recognized the difficulty of mounting MEMS accelerometers for vibration detection applications and developed a proprietary solution (a "mounting cube") to allow the accelerometer to be mounted to the device to the particular machine for which vibration data was required. Ex. 2015, 27-28.

83. For instance, aerospace applications would require relatively lightweight brackets or specialized adhesives to minimize added mass and prevent

operations near modal frequencies. *See* Ex. 2016,[5] 2. In structural monitoring applications, such as for bridges or wind turbines, accelerometer mounts must be encapsulated to protect against environmental factors like dust, water, and corrosion. *See id.*, 1; *See* Ex. 2015, 27. In pedometers, accelerometers detected movement of the entire pedometer by inertially measuring stride accelerations and decelerations, without the need to detect impacts on a particular surface, and the mounting must merely be rigid enough to do so, with further optimizations to rigidity yielding no functional improvement. Some pedometers employed piezoelectric sensors to detect footstep impacts to complement the aforementioned inertial accelerometers.

84. Thus, the goal-specific mountings of accelerometers must address distinct challenges tailored to each application, and the teachings of one mounting objective do not translate to those of another.

2. The ’738 Patent

85. I understand that the invention of the ’738 Patent relates to a control system that detects gestures associated with a mounting surface and generates associated commands to a terminal device. APPLE-1001, 1:37-48. The specification

---

[5] Ex. 2016 is a product brochure for Honeywell accelerometers, dated October 2015. Although after the Critical Date, the general information cited here is consistent with the knowledge and understanding of a POSITA before the Critical Date.

describes embodiments that include a housing that has an engagement means for a mounting surface, the engagement means including an attachment means that attaches the housing to the mounting surface. . *Id.*, 4:42-51. The engagement means also includes a transmission portion connecting the sensor to the housing. *Id.* Due to its placement, the sensor forms an interactive zone aligned with the mounting surface. *Id.*, 4:52-64. The sensor is in a fixed position relative to the engagement means, which allows the sensor to detect a contact interaction with the mounting surface inside the interactive zone. *Id.* A contact interaction—e.g., impact(s)—inside the interactive zone generates data signals of the sensor through the transmission portion of the housing. *Id.*, 4:55-66; 8:48-65. The impacts are translated to the mounting surface for detection by the sensor through the mounting surface as data signals. *Id.*

86. As shown in Figure 4 (below), the housing 20 includes an engagement means 24 for a mounting surface 22. *Id.*, 6:62-7:17. Engagement means 24 comprises an attachment means 26 between the housing 20 to the mounting surface 22. *Id.* The engagement means also comprises a transmission portion 28 connecting the sensor 30 to the housing 20. *Id.*

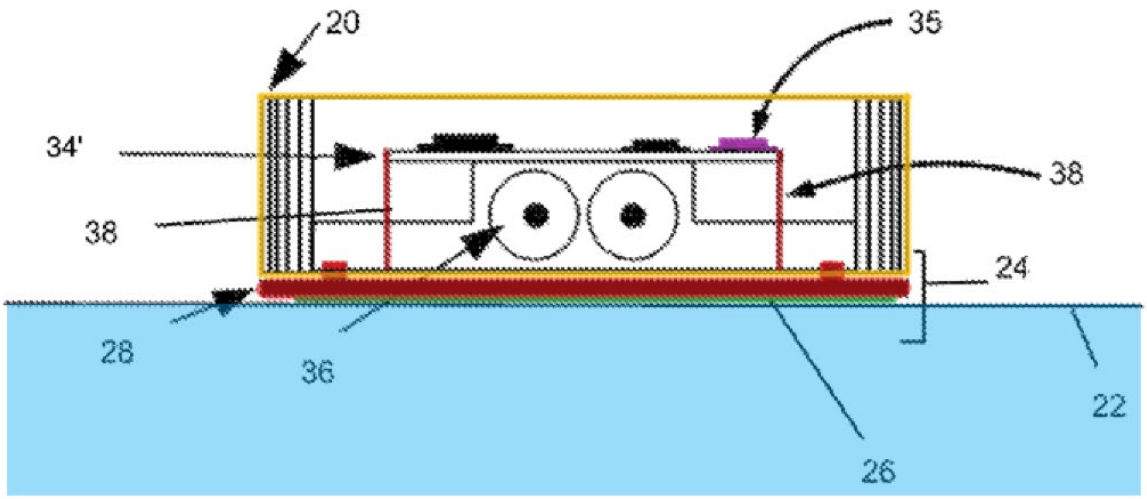

FIG. 4

87. The attachment means 26 can be an adhesive, mechanical fasteners, threaded screws or other components to hold the housing 20 to the mounting surface 22. *Id.* The transmission portion 28 can be comprised of frames and brackets 38 or a spring-loaded portion (not shown) so as to reduce damping. *Id.* It can also be comprised of a rigid material, such as an injection molded frame. *Id.* 8:20-25. In the claimed invention, the transmission portion is comprised of a material with flexibility different than the mounting surface, so as to set a rigid position of the sensor relative to the mounting surface. *Id.*, 12:39-45, 13:50-54. The transmission portion may hold the housing 20 "closer and stronger to the mounting surface 22 so as to reduce damping sound or vibration of contact interaction." *Id.*, 8:31-35.

88. The engagement means 24 attaches the sensor 30 and reduces damping so that sensor 30 more accurately detects vibrations in the mounting surface 22. *Id.*,

8:9-20. The transmission portion 28 carries vibration from the mounting surface 22 to the sensor 30. *Id.*

89. The invention requires a rigid positioning of the sensor relative to the mounting surface through the housing. In part, this rigid positioning allows vibrations of the mounting surface 22 to be transmitted to the sensor 30. *Id.*, 7:9-7:17. The rigid position of the sensor 30 establishes the transmission of the contact interaction to the sensor 30. *Id.*, 7:18-34. Thus, the "stable construction of the housing 20 and the sensor 30 enable the accurate and efficient conversion of the gestures into commands for the terminal device 50." *Id.*

90. In the disclosed invention, the sensor is in a rigid position relative to the engagement means, so that contact interaction is transmitted through the mounting surface to the sensor. *Id.*, 7:48-8:8. This allows vibration through the mounting surface to be "transmitted as efficiently as possible to the sensor 30 through the mounting surface 22 and the engagement means 24." *Id.*

91. The engagement means 24 of the housing 20 is cooperative with the sensor 30 so that "any contact interaction generates data signals of the sensor through the transmission portion 28 of the engagement means 24." *Id.*, 8:9-13. The fixed position of the sensor relative the engagement means, and the rigid positioning of the sensor relative to the mounting surface 22 through housing 20, collectively ensure there is less damping of the contact interaction through the transmission

portion 28. *Id.*, 8:1-9, 8:18-20 The sensor 30 is thus held in position to "prevent flopping and vibrating separate from the mounting surface" so that the sensor 30 maintains the proper relationship to the mounting surface 22. *Id.*, 8:44-47. The specification teaches that the sensor's data signals are expected to have "improved clarity and accuracy" as compared to systems without the relationship of the sensor within the housing relative to the mounting surface. *Id.*, 8:35-39.

92. The claimed sensor is an accelerometer. *Id.*, 12:5-8, 13:39-40. Accelerometers are distinguished from other sensor types, such as piezoelectric sensors and other mechanical sensor types. *Id.*, 9:19-34. For an accelerometer, the data signals are comprised of vibration data of the contact interaction. *Id.*, 9:27-32.

93. As explained above, vibrations from the contact interactions that the system was intended to detect are particularly sensitive to gaps and interfaces in the transmission path that can cause damping. *See* Section VII.B.1. The inventors discovered that a flexibility difference between the transmission portion and mounting surface of the claimed invention counterintuitively resulted in a net reduction in damping, and thus a stronger and clearer data signal. *Id.*, 8:9-47. As previously discussed, this would have been surprising to a POSITA as of the critical date, because introducing an interface between materials having different flexibilities introduces an impedance mismatch, which would have been expected to increase damping of vibrations. *See* Section VII.B.1.

C. Ground 1A

94. Ground 1A in IPR2024-01475 asserts that both independent claims 1 and 10 are obvious (in addition to certain dependent claims). Ground 1A in IPR2024-01476 challenges only dependent claims of both of the independent claims, but still addresses (as is appropriate) the elements of the independent claims that are also part of the challenged dependent claims.

95. Ground 1A in both Petitions relies on the combination of Murakoshi-Stewart. Apple's analysis and Dr. Bederson's testimony appear substantively identical between the Petitions with respect to the elements of the independent claims (1 and 10). Accordingly, my analysis and opinions below address Ground 1A for both Petitions together. To the extent there are any differences with respect to Ground 1A between the two Petitions, I will note it in my discussion.

1. Independent Claims 1 and 10

96. Claim 1 of the '738 Patent is set forth below, using Petitioner's division and designation of the different limitations:

Claim Element	Claim 1
[1pre]	A control system comprising:
[1a]	a housing having an engagement means for a mounting surface;
[1b-i]	a sensor contained within said housing,
[1b-ii]	said sensor forming an interactive zone defined by a range of said sensor,
[1b-iii]	said sensor being comprised of an accelerometer,
[1b-iv]	said interactive zone being aligned with said mounting surface and

Claim Element	Claim 1
	overlaying said mounting surface outside a perimeter of said housing,
[1b-v]	said sensor being in a fixed position relative to said engagement means,
[1b-vi]	wherein a contact interaction associated with said mounting surface within said interactive zone is detected by said sensor as data signals,
[1b-vii]	said contact interaction being comprised of an impact on said mounting surface,
[1b-viii]	said data signals being comprised of vibration data of said contact interaction;
[1c-i]	a server in communication with said sensor,
[1c-ii]	said server being comprised of a routing module,
[1c-iii]	a processing module being connected to said routing module, and
[1c-iv]	an output module connected to said processing module,
[1c-v]	said routing module receiving said data signals from said sensor,
[1c-vi]	said processing module determining a data pattern corresponding to said data signals of said contact interaction and matching said data pattern with a gesture profile, said gesture profile being associated with a command; and
[1d-i]	a terminal device
[1d-ii]	being comprised of a receiving module
[1d-iii]	and means for initiating activity of said terminal device corresponding to said command,
[1d-iv]	said terminal device being in communication with said server,
[1d-v]	said output module transmitting said command to said receiving module,
[1e]	wherein said engagement means of said housing comprises: an attachment means between said housing to said mounting surface; and a transmission portion connecting said sensor to said attachment means of said housing and being comprised of a material with flexibility different than said mounting surface so as to set a rigid position of said sensor relative to said mounting surface, said contact interaction generating said data signals of said sensor through said transmission portion.

97. Claim 10 of the ’738 Patent is set forth below, using Petitioner’s division and designation of the different limitations:

Claim Element	Claim 1
[10pre]	A method of controlling a terminal device, the method comprising the steps of:
[10a]	installing a housing on a mounting surface by an engagement device,
[10b-i]	said housing being comprised of a sensor contained within said housing,
[10b-ii]	said sensor being comprised of an accelerometer,
[10b-iii]	said sensor forming an interactive zone defined by a range of said sensor, said interactive zone being aligned with said mounting surface and overlaying said mounting surface outside a perimeter of said housing,
[10b-iv]	said sensor being in a fixed position relative to said engagement device,
[10c]	wherein said engagement device of said housing comprises: an attachment device between said housing to said mounting surface; and a transmission portion connecting said sensor to said attachment device of said housing and being comprised of a material with flexibility different than said mounting surface so as to set a rigid position of said sensor relative to said mounting surface;
[10d-i]	connecting a server in communication with said sensor,
[10d-ii]	said server being comprised of a routing module,
[10d-iii]	a processing module being connected to said routing module,
[10d-iv]	and an output module connected to said processing module;
[10e-i]	connecting a terminal device in communication with said server,
[10e-ii]	said terminal device being comprised of a receiving module;
[10f]	making a physical impact on said mounting surface so as to generate a contact interaction;
[10g]	detecting said contact interaction as data signals with said sensor, said data signals being comprised of vibration data of said contact interaction, said contact interaction generating said data signals of said sensor through said transmission portion;
[10h]	receiving said data signals from said sensor with said routing module of said server;

Claim Element	Claim 1
[10i]	determining a data pattern corresponding to said data signals of said contact interaction with said processing module;
[10j]	matching said data pattern to a gesture profile with said processing module, said gesture profile being associated with a command;
[10k-i]	transmitting said command to said receiving module of terminal device with said output module of said server,
[10k-ii]	said command corresponding to activity of said terminal device; and
[10l]	performing said activity with said terminal device.

2. The Asserted References

a. Murakoshi

98. Murakoshi describes an apparatus for controlling a user interface of a device. APPLE-1004 [0013]. The apparatus may detect vibrations of a vibratory surface caused by an interaction of an object with the surface. *Id*. Murakoshi discloses that:

> The apparatus 104 may be **coupled to** the vibratory surface 106. In an embodiment, the apparatus 104 may be **fixed on** the vibratory surface 106. For example, a table top may be used as the vibratory surface 106. The apparatus 104 may be **fixed above and/or below** the table top. In another embodiment, the apparatus 104 may be **embedded in** the vibratory surface 106.

Id. [0021]. The apparatus includes a sensor 206, which may be "an accelerometer, a gyroscope, an ultra-sonic sensor, a microphone" or another sensor type capable of detecting vibrations. *Id.* [0025], [0029]. Murakoshi teaches that the sensor may be a

component or integral part of the apparatus, or external to it:

> In an embodiment, the sensor 206 may be an integral part of the apparatus 104. The apparatus 104 may be coupled to the vibratory surface 106 in such a manner that the sensor 206 may be in contact with the vibratory surface 106. In another embodiment, the sensor 206 may be external to the apparatus 104. The sensor 206 may be coupled to and/or embedded in the vibratory surface 106. In an embodiment, the apparatus 104 may be communicatively coupled to the sensor 206 via a wired or wireless communication medium.

Id. [0030].

99. Murakoshi does not specifically explain how its sensor is attached to the apparatus and vibratory surface, beyond the general descriptions of "fixing" and "coupling" referenced above. It contains no disclosure suggesting the teachings of the '738 Patent regarding how the engagement means (including attachment means and transmission portion) functions to attach a housing to a mounting surface so that

the sensor is rigidly positioned[6] relative to the mounting surface through the housing, or that the transmission portion be comprised of a material with flexibility different than the mounting surface to enable the efficient and accurate detection of vibrations from contact interactions.

b. Stewart

100. Stewart is a U.S. Patent titled "Vibrating Accelerometer-Multisensor." It discloses a "vibrating multisensor" having two accelerometers which are "vibrated along straight lines perpendicular to their sensing axes." APPLE-1006, Abstract. Stewart specifically "relates to an inertial instrument," more particularly "multi-axes vibrating accelerometers" "for measuring both the linear acceleration and rate of rotation of a moving body." *Id.*, 1:18-22. As shown in annotated Figures 1-3 below, Stewart attaches its accelerometers to a "three-part bracket assembly" that includes

---

[6] I note that Apple, in discussing the Li-iFixit grounds in IPR2024-01475, states that an accelerometer that does not move is rigid relative to a mounting surface. 1475-Petition, 98-99 ("The accelerometer does not move (i.e., is rigid) relative to the mounting surface."). I agree that this is the plain and ordinary meaning of the term, within common sense limits. A POSITA would expect that even a rigid mounting would allow for some movement (perhaps only at a microscopic scale) relative to the mounting surface due to vibration waves traveling through both the accelerometer and the mounting surface.

fingers (18, 20), beam (19, 21), and lower fingers (30, 32). *Id.*, 5:8-13, 5:30-33. This bracket assembly positions the accelerometers within cavity (16) inside case (14) so that they are suspended between sidebeams (25-28) "to react to and to provide a … measure of acceleration of the supporting structure." *Id.*, 4:64-68, 5:8-9, 5:54-56. "[E]ach combined bracket-and-accelerometer assembly is sandwiched between a pair of spaced-apart flexible sidebeams that include piezoelectric elements bonded thereto for effecting predetermined vibratory sensor motion." *Id.,* 5:15-20. The piezoelectric elements (70, 72, 74, 76) vibrate the accelerometers "at a preselected frequency" to extract measures of linear and Coriolis accelerations from their output signals. *Id.*, 3:27-38. Coriolis acceleration is used to measure of the angular rotation rate. *Id.*, 2:3-10. Coriolis acceleration is typically measured in systems using self-vibrating sensors such as those described in Stewart. Commonly, this involves actively vibrating a mass along a defined axis, subjecting the mass to a rotational motion, and detecting the resulting force or displacement perpendicular to both the axis of vibration and the axis of rotation. This displacement is proportional to the Coriolis acceleration and can be used to calculate the angular velocity of the rotating system. *See id*.

Case 14

Acclerometer 10, 12

Cavity 16

Beam 19, 21

Finger 18, 20

Lower Finger 30,32

Sidebeam 25, 26, 27, 28

Piezoelectric Element 70, 72, 74, 76

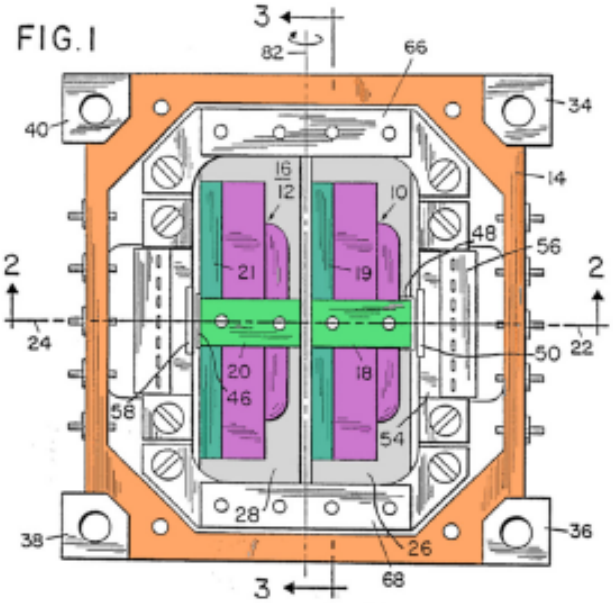

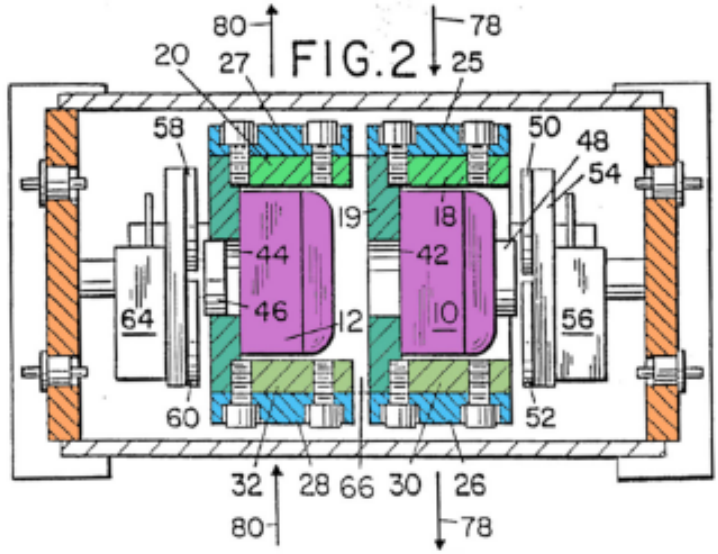

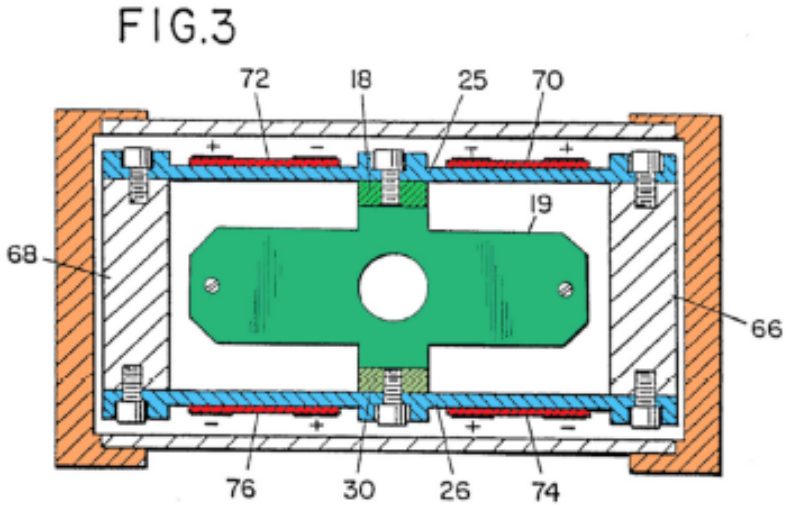

101. By applying positive and negative voltages, the piezoelectric elements deliver upward and downward forces to the sidebeams, forcing the combinations of sidewalls, brackets, and accelerometers upwards and downwards:

> Piezoelectric vibration elements 70, 72, 74, 76 are bonded to the web-like portions of the side beams by adhesives such as epoxy or the like. Metallized contacts are plated in pairs to the piezoelectric elements. Piezoelectric material is deformed predictably and reproducibly in response to positive and negative voltages. For example, by delivering negative and positive voltages to polarized piezoelectric elements shown in FIG. 3, upward forces are delivered to each side beam at its midpoint. By reversing the signs of the voltages, the combinations of sidewalls, brackets and accelerometers are forced downward.

Id., 5:62-6:5. Stewart further explains that

> … [B]y sequencing the polarities of the electrical voltages, the accelerometer 10 and the accelerometer 12 are substantially sinusoidally vibrated in phase opposition at a preselected frequency, preferably the mechanically resonant frequency of the vibrating structure. The amplitude of the sinusoidal velocity of vibration is held constant by the mod driver 86 (FIG. 4).

Id., 6:5-12. This intentional vibrating of the accelerometers produces "measurable acceleration signals proportional to the component of the rate of rotation of the multisensor apparatus" so that the accelerometer output signals contain "measures

of the rate of rotation of the system." *Id.*, 6:23-31.

102. Stewart's mounting system was specifically designed to "suspend[s] [the accelerometers] within the case of the multisensor to minimize any deleterious mechanical feedback between the accelerometer and the case." *Id.*, 7:54-64. A POSITA would have understood that Stewart thus teaches that its flexible mounting system minimizes transmission of external surface vibrations of the supporting structure to the accelerometers so that they do not affect the calibrated sinusoidal vibration at the preselected frequency. *Id.*, 5:62-6:19. Stewart also explains that its accelerometers were not "fixed" in Stewart's casing but only maintained a "mean or average position during vibration." *Id.*, 5:21-25. Therefore, although Stewart positions its accelerometers within its housing, it does not fix them in position but allows them to move to enable oscillations necessary to carry out their intended function in Stewart.

103. A POSITA would have recognized that Stewart describes a sensor using a pair of oscillating accelerometers. These accelerometers utilize a vibrating element or mass, which is oscillated at a specific frequency by a mechanism within the accelerometer. These accelerometers are not used to detect vibration waves in a material, given that their self-generated vibrations would defeat this function, but rather to sense motion. Such accelerometers are used (with other sensors) in certain positioning and navigation systems (commonly called inertial navigation systems).

See, e.g., Ex. 2018 (describing the development of a silicon oscillating accelerometer for use in precision navigation, specifically for use in replacing high-cost "pendulous integrating gyro accelerometers" with the lower cost oscillating accelerometer).

3. Whether a POSITA would have considered the challenged claims obvious in view of Ground 1A (Murakoshi-Stewart)

104. I understand that Apple asserts, for Ground 1A (Murakoshi-Stewart), that a POSITA would have combined the references by attaching Murakoshi's accelerometer within a casing or housing using Stewart's brackets and sidebeams, as well as case mounts to fix the apparatus to the vibratory surface of Murakoshi using fasteners. 1475-Petition, 14-15; 1476-Petition, 14-15. I detail Apple's asserted motivations to combine in Section VII.D.3.b. below. Generally, however, all of Apple's motivations depend on a purported motivation to securely fix or mount the accelerometer and housing using Stewart's brackets and case mounts, and the assertion that such mounting would have been recognized as a suitable option for Murakoshi's apparatus. 1475-Petition, 15-16; 1476-Petition, 15-17.

105. As further explained below, a POSITA would have immediately recognized that Stewart's mounting system (its brackets, sidebeams, case mounts, and fasteners) would not result in "fixing" an accelerometer within its housing to prevent it from moving. This is because Stewart teaches that its mounting system is expressly designed to enable its accelerometers to move relative to its surrounding

casing/housing and the underlying support surface, for the express purpose of limiting external vibrations from affecting the accelerometers. Therefore, this combination would not enable Murakoshi's accelerometer to detect the surface vibrations required by Murakoshi's system/method, but would have actually inhibited such detection. Therefore, a POSITA would not have been motivated to use Stewart's mounting system to achieve the claimed invention.

a. Whether there was a Motivation to Combine and Reasonable Expectation of Success in Achieving the Claimed Invention

106. A POSITA would have recognized that Stewart relates specifically to inertial navigation systems relevant to applications such as guided missiles. *See, e.g.,* Ex. 2018. This is based on the technology described (oscillating accelerometers commonly proposed for use for such applications), as well as the applicant, which was (among other things) an American aerospace and defense contractor acquired by Northrop Grumman in 2001. *See* https://www.britannica.com/money/Litton-Industries-Inc; https://investor.northropgrumman.com/news-releases/news-release-details/northrop-grumman-announces-completion-merger-litton-industries. The prior art referenced in Stewart likewise pertains to various sensors ("rate sensing gyros") developed by aerospace/defense companies. APPLE-1006, 1:60-2:2.

107. Stewart's teaching that its accelerometers are intentionally vibrated at a preselected frequency would have informed a POSITA that its accelerometers use a feedback control system that actively counteracts the inertial force acting on its

suspended inertial mass members. APPLE-1006, 1:23-59, 3:5-15, 3:27-38. A POSITA would have understood that Stewart's accelerometers were not intended to and did not detect external vibration of the support structure, but were intentionally mechanically oscillated at a preselected frequency to create a desired sinusoidal vibration that is used to determine the rate of rotation of the support structure. APPLE-1006, 3:5-15, 4:64-68, 5:62-6:31.

108. Stewart's system was designed to actively generate oscillations of the accelerometers within the sensor's housing. A POSITA would have understood that Stewart's bracket assemblies were not intended to, and did not, rigidly position the accelerometers relative to the casing or the underlying mounting surface on which the case was mounted. Instead, Stewart suspended the accelerometers so they could be vibrated at the desired frequency. The mounting system was specifically intended to enable the accelerometers to move independently of their casing and mounting surface. If the bracket assemblies and other components rigidly positioned Stewart's accelerometers to either the casing or mounting surface, the accelerometers would not be able to properly vibrate as Stewart intended.

109. A POSITA would therefore have understood that, unlike the design of the '738 Patent, Stewart's mounting system was not designed to enable accelerometers to detect vibrations associated with the mounting surface. Rather, its express purpose was to suspend its accelerometers to minimize external vibrations

from the support or mounting surface, so that they would not affect the preselected vibration caused by the piezoelectric elements. APPLE-1006, 7:54-64. This is the opposite of the claimed invention, which requires an accelerometer be connected via a transmission portion that sets a "rigid position of said sensor relative to said mounting surface."

110. Therefore, if Stewart's mounting system were used to attach Murakoshi's accelerometer to its apparatus, a POSITA would have expected that vibrations from Murakoshi's vibratory surface would be damped such that they would not be effectively transmitted to the accelerometer. Therefore, if combined as in Murakoshi-Stewart, the accelerometer would be prevented from effectively detecting vibrations of the vibratory surface. This would render Murakoshi-Stewart inoperable for the intended purpose described in Murakoshi (to "detect one or more vibrations of a vibratory surface caused by an interaction of an object with the vibratory surface" so that its "apparatus may generate one or more vibratory signals in response to the detected one or more vibrations" and "generate a control signal corresponding to the one or more generated vibratory signals to control the user interface of the device"). APPLE-1004 [0013].

111. Because Stewart's mounting system was designed to prevent transmission of vibrations from an external surface to the accelerometers, it would

not have produced the result achieved in the claimed invention in combination with Murakoshi.

b. Analysis of Apple's Arguments and Evidence in Support of the Combination of Murakoshi-Stewart

i. Apple's Motivation to Combine Arguments and Evidence

112. Apple's first motivation to combine is that "Using brackets and fasteners to mount the sensor to the housing and housing to a surface would have been well-known to the POSITA by the Critical Date." 1475-Petition, 15; 1476-Petition, 15. This appears to be an assertion that brackets and fasteners, and using them to mount a sensor to a housing and a housing to a surface, was known. I do not see that this is a motivation to combine Murakoshi and Stewart, but merely an assertion that these components and their use was known. I would not consider this a valid motivation to combine Stewart's mounting system with Murakoshi, because it overlooks the specific teachings of Stewart as well as the well-known fact that mounting components were not considered a "one-size fits all" for accelerometers. As discussed, mounting accelerometers required careful consideration of the design purpose. *See* Section VII.B.1.c.

113. Apple's second motivation to combine is that "A POSITA would have understood that the accelerometer would operate better if fixed within the apparatus to orient the accelerometer within the housing and prevent it from moving within the housing." 1475-Petition, 15; 1476-Petition, 16. However, as discussed, Stewart does

not teach "fixing" its accelerometers as asserted, but rather teaches the opposite. *See* Sections VII.C.2.b. A POSITA attempting to implement Murakoshi's system would therefore not have looked to Stewart's mounting system to "fix" an accelerometer within Murakoshi's apparatus.

114. Petitioner cites to Dr. Bederson's declaration, as well as Murakoshi ([0029]-[0030]) and Stewart (Fig. 1). 1475-Petition, 15; 1476-Petition, 16. As discussed, Murakoshi only generically describes coupling or fixing its accelerometer to the vibratory surface, but does not describe orienting an accelerometer or preventing it from moving within its housing. *See* Section VII.C.2.a. Stewart does not teach "fixing" its accelerometer as previously explained. *See* Section VII.C.2.b. Therefore, these references do not support the alleged motivation.

115. The first cited portion of Dr. Bederson's declaration is to the section entitled "Accelerometer Basics." 1475-1003 ¶¶ 39-43; 1476-1003 ¶¶ 39-43. In this section, Dr. Bederson discusses: general accelerometer availability and operating principles (¶¶ 39-40), differences between piezoelectric and capacitive accelerometers (¶¶ 41-42), and mounting of accelerometers when used to measure vibration (¶ 43). The only portion of this section that appears relevant to the alleged motivation is found in the last paragraph related to mounting. There, Dr. Bederson asserts that "accelerometer performance suffers if the accelerometer housing is not properly mounted to the surface of the object under measurement," and cites

APPLE-1039 (page 1) in support. 1475-1003 ¶ 43; 1476-1003 ¶ 43. While this statement is generally true, "properly mounted" does not equate to "fixed within the apparatus" or "prevent[ing] [the accelerometer] from moving within the housing." Stewart itself suggests proper mounting but does not fix its accelerometers or prevent them from moving, as previously explained. The cited exhibit is an "Accelerometer Installation Guide" for accelerometers from "STI Vibration Monitoring Inc." for that company's accelerometers. APPLE-1039. STI Vibration Monitoring is a provider of vibration monitoring systems for industrial applications, specifically for rotating machinery. *See* https://www.stiweb.com/AboutUs.asp. The cited page explains that (for STI's accelerometers as used in its intended applications), the "mounting location … should be clean and paint free … [and] should be spot-faced to a surface smoothness of 32 micro-inches" because "irregularities in the mounting surface preparation will translate into improper measurements." *Id.*, 1. It also states that "Adhesive or glue mounting provides a secured attachment without extensive machining; however this method will reduce the operational frequency range since the adhesive will act like a shock absorber, this is also known as damping." *Id.* The exhibit recommends "stud mounting" because "[a]ny other mounting method will adversely affect … the usable frequency response range [of the accelerometer]." While all of these statements are no doubt true given STI's accelerometers and specific applications, none of them suggest "fixing" an accelerometer within its

housing to prevent it from moving. In fact, they do not suggest the use of a housing at all, but only directly mounting an accelerometer to the vibratory surface.

116. Dr. Bederson also states that it was well known to mount accelerometers to a surface using a variety of different components. 1475-1003 ¶ 43; 1476-1003 ¶ 43. While true, as discussed for Apple's first motivation to combine, just because these products were known does not suggest their use for Murakoshi's apparatus given that accelerometer mounting was highly dependent on the design purpose.

117. Dr. Bederson next asserts that "accelerometers have a sensing range (i.e., bandwidth) that reduces when the sensor is not solidly and directly attached to the object under measurement." *Id.* This statement also does not support the motivation, which is to fix the accelerometer and prevent it from moving in its housing. He cites again to APPLE-1039 (page 1), discussed above. With regard to sensing range, the page states that "the mounting method has an effect on the operating frequency range" and that "[t]he advertised range is achievable by stud mounting," but does not suggest preventing the accelerometer from moving within its housing. He also cites APPLE-1040 (page 7). That exhibit is an "Application Report" from Texas Instruments regarding the "3-V Accelerometer Featuring TLV2772." APPLE-1040. The accelerometer appears to be a piezoelectric accelerometer. *Id.,* 7 ("[t]he shock sensor contains three piezoelectric sensing

elements"). The cited page references the accelerometer features and specifications, but appears to contain nothing related to accelerometer mounting, and nothing supporting the assertion to fix an accelerometer within its housing to prevent it from moving. *Id.*

118. Finally, Dr. Bederson cites APPLE-1039 (page 7) to support the statement that "vibrations outside the bandwidth are not measured by the accelerometer" and therefore "the sensor should be solidly fixed to the object under measurement." 1475-1003 ¶ 43; 1476-1003 ¶ 43. This page explains the proper use of cabling between the accelerometer and transmitter to reduce "induced noise or line interference," including noise from "Conductive Coupling (Direct Connection)." APPLE-1039, 7. I see nothing on this page that supports the assertion for which it is cited. Certainly, there is nothing suggesting a need to prevent an accelerometer from moving within its housing or fix it within its housing.

119. Thus, nothing in this section of Dr. Bederson's declaration supports the assertion that the accelerometer "would operate better if fixed within the apparatus to orient the accelerometer within the housing and prevent it from moving within the housing." I note that Dr. Bederson himself testifies to the contrary, specifically:

> Accelerometers need to be firmly attached within a casing, for example as Stewart teaches, to operate effectively, because vibrations external to the casing need to be passed through the casing to the accelerometer, and *the accelerometer needs to be*

> *able to move relative to the casing (and relative to the surface the casing is mounted to)* to detect the extent of the vibrations.

1475-1003 ¶ 114; 1476-1003 ¶ 110.

120. In addition to the "Accelerometer Basics" section of Dr. Bederson's declaration, Apple also cites certain paragraphs specific to this motivation to combine. 1475-Petition, 15 (citing APPLE-1003 ¶¶ 117-118); 1476-Petition, 16 (citing APPLE-1003 ¶¶ 113-114). These paragraphs in the two declarations are identical. For convenience, I will refer to them using the paragraph numbers in 1475-1003.

121. Paragraph 117 states that "[a]ccelerometer movement independent of the vibratory surface or device or measurement would result in an improper … measurement." In support, Dr. Bederson cites APPLE-1041 (pages 28-30) and APPLE-1037 (pages 3-4). APPLE-1041 is a series of pages which contain no identifying information. Apple's exhibit list describes it as "Dr. Hisham El-Sherif, Lecture 7: Piezoelectric Transducer slides (2010)," although nothing within the exhibit itself provides this information. The only information on the cited pages (which relate solely to piezoelectric accelerometers) that appears relevant is a statement that the "base of the device is attached to the object whose motion is to be measured." APPLE-1041, 29. APPLE-1037 is a paper entitled "Clinical Applications of Sensors for Human Posture and Movement Analysis: A Review."

The cited pages discuss the use of different types of accelerometers for tracking human posture and movement generally. APPLE-1037, 3-4. Nothing in either of these references supports the primary assertion that there was a motivation to fix the accelerometer within its housing to prevent it from moving.

122. Paragraph 117 also states that an accelerometer's orientation "also determines whether it reports proper measurement values." Even accepting this as true, it too does not support the assertion that there was a motivation to fix an accelerometer within its housing to prevent it from moving. As shown in Stewart, the general orientation of the accelerometers does not change, but they are not fixed or prevented from moving.

123. Paragraph 118 states that "[f]ixing the accelerometer within the housing would prevent the accelerometer from being loose within the housing, moving around and possibly being damaged." However, "fixing" the accelerometer within its housing such that it does not move at all is not the same thing as preventing it from "being loose" and "moving around." Stewart's accelerometers were not rigidly "fixed" within their housing, yet were certainly not allowed to "move around" sufficiently to subject them to damage. Section VII.C.2.b. Again, Dr. Bederson's testimony that "the accelerometer needs to be able to move relative to the casing" also contradicts this assertion. 1475-1003 ¶ 114; 1476-1003 ¶ 110.

124. Paragraph 118 further asserts that Murakoshi's description of its sensor as "integral" to its apparatus "would have motivated a POSITA to investigate ways to fix the accelerometer within the device." But Murakoshi's reference to an "integral part" indicates only that the sensor may be a component part of the apparatus, versus an external component. APPLE-1004 [0030]. Further, even if a POSITA was motivated to make the accelerometer a component part of an apparatus does not itself suggest "fixing" the accelerometer to the apparatus so that it cannot move. Stewart's accelerometers were certainly an "integral" part of their sensor, but were intended to move to perform their design function.

125. Apple's third motivation to combine is that "A POSITA would have been motivated to securely mount the accelerometer and housing using brackets and case mounts (per Stewart) to enable the accelerometer to detect vibrations without interference from housing components."1475-Petition, 15; 1476-Petition, 16. This motivation to combine cannot support the asserted combination because, as discussed, Stewart's accelerometers were not rigidly positioned relative to their mounting surface but instead were suspended by its brackets to prevent external vibrations from interfering with the self-generated vibration of the accelerometers using the multisensor's internal piezoelectric elements. *See* Section VII.C.2.b. The combination would therefore have prevented the accelerometer from detecting vibrations from the vibratory surface. Section VII.C.3.a.

126. Apple's fourth and fifth motivations to combine are similar: "A POSITA would have understood how to couple an apparatus to a surface, per Murakoshi, and been capable of selecting between the possibilities— including selection of 'case mounts' and fasteners, per Stewart" and "A POSITA would have recognized that Stewart's teaching of using brackets is a suitable option that could be used in the context of Murakoshi's apparatus." 1475-Petition, 15-16; 1476-Petition, 16. But a POSITA would not have considered Stewart's mounting system as suitable option. Stewart's mounting system would suspend the accelerometer, resulting in damping of vibrations from the vibratory surface, preventing detection of vibrations. *See* Sections VII.C.2.b., VII.C.3.a. This would prevent Murakoshi-Stewart from performing the design objectives of Murakoshi's system/method. *See id.*

ii. Apple's Reasonable Expectation of Success Arguments and Evidence

127. In the 1475-Petition, Apple states that

> A POSITA would have understood that the combination of known elements according to known methods would have yielded predictable results, as each element performs a similar function combined as it does separately, the combination would have been well within a POSITA's skill, at least because mechanisms for fastening sensors within housings and fastening a sensor housing were well known by the Critical Date. Accordingly, a POSITA

> would have had a reasonable expectation of success in making the combination, for the bulleted reasons explained above, and because the positioning of an accelerometer within a housing and fastening a housing to a surface were well known to a POSITA by the Critical Date.

1475-Petition, 16 (citations omitted). In the 1476-Petition, Apple states that

> A POSITA would have understood that the combination of known elements according to known methods would have yielded predictable results, as each element performs a similar function combined as it does separately, the combination would have been well within a POSITA's skill, and, accordingly, a POSITA would have had a reasonable expectation of success in doing so, for the bulleted reasons explained above, and because the positioning of an accelerometer within a housing and fastening a housing to a surface were well known to a POSITA by the Critical Date.

1476-Petition, 16-17 (citations omitted). While not exactly the same, both assertions are substantively identical.

128. While I agree that a POSITA would have been able to install Stewart's mounting system for an accelerometer in combination with Murakoshi's apparatus, as previously explained this combination would not achieve the features of the clamed invention or accomplish the goals for Murakoshi's system. A POSITA would have recognized that the Murakoshi-Stewart mounting system (from Stewart) would minimize transmission of vibrations in the vibratory surface to the accelerometer,

preventing it from detecting the vibrations necessary to carry out Murakoshi's stated purpose. Thus, there was no reasonable expectation the combination would successfully accomplish Murakoshi's stated purpose or achieve the functionality required by the claimed invention.

4. Whether Ground 1A Discloses or Suggests All Elements of the Challenged Claims

129. I understand that, in order to render a claim unpatentable, a combination of prior art references must disclose or suggest all elements of the claim. I also understand that if a combination does not disclose or suggest all elements of an independent claim, then it does not disclose all elements of any claim that depends from that independent claim.

130. Below, I discuss two elements of the independent claims that in my opinion are not disclosed or suggested by Murakoshi-Stewart. Because this means that the combination cannot render any challenged claim unpatentable, I have not done additional analysis of any of the remaining claim elements. I reserve the right to do so should either of the Petitions be granted.

a. Independent Claim Elements [1b-v] and [10b-iv]

131. These claim elements require the claimed "sensor being in a fixed position relative to said engagement means."

132. Apple asserts that "in Murakoshi-Stewart, an accelerometer, per Murakoshi, is held within the apparatus casing in a fixed position relative to the bracket assembly, fasteners, and case mounts (collectively, engagement means) which position the accelerometer relative to the mounting surface." 1475-Petition, 23; 1476-Petition, 24. Further, Apple asserts that this would "hold the sensor in a fixed position relative to a sensing surface." *Id.*

133. I disagree. If Murakoshi's accelerometer were mounted using the brackets, sidebeams, and fasteners (mounting system) described in Stewart, it would not be held in a fixed position relative to the bracket assembly, fasteners, and case mounts that Apple maps to the engagement means, nor in a fixed position relative to the vibratory surface. This is because, as previously explained, these components were designed to allow Stewart's accelerometers to purposely oscillate at a preselected frequency. APPLE-1006, 3:27-38, 5:15-20, 5:62-6:19; *see* Sections VII.C.2.b., VII.C.3.a. Stewart teaches that the accelerometers positioned using this mounting system were not "fixed" but only maintained a "mean or average position during vibration." *Id.*, 5:21-25. Murakoshi-Stewart would not hold the accelerometer in a fixed position relative to the engagement means, nor would it enable "accurate detection of vibratory signals," (1475-Petition, 23; 1476-Petition, 24), but would instead prevent such detection. *See* Sections VII.C.2.b., VII.C.3.a

b. Independent Claim Elements [1e] and [10c]

134. Claim element 1[e] requires the engagement means to comprise "an attachment means between said housing to said mounting surface; and a transmission portion connecting said sensor to said attachment means of said housing and being comprised of a material with flexibility different than said mounting surface so as to set a rigid position of said sensor relative to said mounting surface, said contact interaction generating said data signals of said sensor through said transmission portion." Claim element [10c] requires the engagement device to comprise "an attachment device between said housing to said mounting surface; and a transmission portion connecting said sensor to said attachment device of said housing and being comprised of a material with flexibility different than said mounting surface so as to set a rigid position of said sensor relative to said mounting surface." Apple analyzes claim 10 by reference to claim 1. 1475-Petition, 37 n.6; 1476-Petition, 52 n.7.

135. Apple maps the "transmission portion" of the engagement means/engagement device to the combination's "teaching of a bracket assembly that connects the sensor to the case mounts and fasteners (attachment means) of the casing, per Stewart." 1475-Petition, 32-33; 1476-Petition, 34. Apple asserts that "Murakoshi-Stewart's bracket assembly and case mounts with mechanical fasteners couple a sensor to the housing and the housing to a mounting surface." 1475-

Petition, 33; 1476-Petition, 34-35. Apple further asserts that a POSITA "would have understood that the brackets and casing described by Stewart hold the sensor rigidly in place relative to the attachment means, and thus also hold the sensor in a rigid position relative to the vibratory surface." 1475-Petition, 33-34; 1476-Petition, 35.

136. First, I note that the claims require the transmission portion be "comprised of a material *with flexibility different than said mounting surface* so as to set a rigid position of said sensor relative to said mounting surface." Apple asserts that "[a] POSITA would have understood that the *composition and structure* of the bracket assembly *would be different than the vibratory surface* … because of differences in material and/or thickness," (1475-Petition, 33; 1476-Petition, 35). However, Apple does not assert that the bracket assembly would have had a flexibility different than the mounting surface, as required by the claims. Even if Apple assumed that the bracket assembly and mounting surface would have different flexibilities, it does not assert this or provide any evidence to that effect. Although Dr. Bederson states that "a POSITA would have recognized that the difference in materials, and, in particular, a difference in the flexibility of the components, would allow for advantageous transmission of vibrations from the mounting surface to the transmission portion and from the transmission portion to the sensor," (1475-1003 ¶ 175; 1476-1003 ¶ 172), he never states that the bracket assembly actually would have had a flexibility different than the mounting surface. Further, his assertion that

a POSITA would have recognized this fact is not supported. I disagree with this assertion as previously explained, because a POSITA would have considered a difference in the flexibility of these components to introduce an impedance mismatch which would have been expected to damp vibrations. *See* Section VII.B.1.

137. Stewart does not mention any flexibility differences itself, or provide any measure of the flexibility of its components. Without evidence or analysis, it is impossible to conclude that these materials could not have had the same flexibility. Thus, Murakoshi-Stewart as asserted by Apple fails to disclose or suggest that the transmission portion is comprised of a flexibility different than the mounting surface.

138. In addition, Murakoshi-Stewart's transmission portion does not "set a rigid position of said sensor relative to said mounting surface." Stewart's three-part bracket assembly (the mapped transmission portion) suspended an accelerometer such that it was able to oscillate/vibrate independently of the casing and mounting surface, and acted to prevent vibrations from the support surface from being transmitted to the accelerometers. *See* Section VII.C.3.b. In the combination, the bracket assembly would not "set a rigid position" of the accelerometer "relative to [the] mounting surface" as the claims require, because this was the opposite purpose for which the bracket assemblies were expressly designed. *Id.* Thus, Murakoshi-Stewart does not teach or suggest that the transmission portion sets a rigid position of the sensor relative to the mounting surface.

c. Dependent Claims

139. Because Murakoshi-Stewart does not disclose or suggest all elements of the independent claims as detailed above, it does not disclose all elements of any dependent claims challenged by Ground 1A in either Petition.

D. Ground 1B

140. Ground 1B consists of the Murakoshi-Stewart apparatus of Ground 1A in combination with Sachs (APPLE-1007, U.S. Patent Application Publication No. 2009/0265671). 1475-Petition, 38-39; 1476-Petition, 56-57. For the same reasons I explained above with regard to Ground 1A, Ground 1B does not render any challenged claim unpatentable. *See* Section VII.C.

E. Ground 1C

141. Ground 1C is the combination of the "Murakoshi-Stewart-Sachs apparatus" of Ground 1B in combination with Orr (APPLE-1005, U.S. Patent Application Publication No. 2015/0348554). 1475-Petition, 45; 1476-Petition, 65. Apple's analysis does not substantively differ from its analysis of Ground 1B (which incorporated Ground 1A), except in the application of Apple's preferred claim construction for certain elements (the "output module" [1c-iv], the "routing module" [1c-v], the "processing module" [1c-vi], and "said output module transmitting said command to said receiving module" [1d-v]). 1475-Petition, 47-65; 1476-Petition, 67-90.

142. Apple also provides a separate analysis for elements [1e] and [10c] pursuant to its constructions. 1475-Petition, 49, 61-64; 1476-Petition, 69, 81-84. However, in the combination Apple asserts that Ground 1C renders this element obvious for the same reasons set forth in Ground 1A—namely, "based on Stewart's teachings of (1) case mounts for use with mechanical fasteners and (2) a bracket assembly." 1475-Petition, 49; 1476-Petition, 69. That is, Apple asserts that "the brackets, support flexures, and casing, per Stewart, hold the sensor rigidly in place relative to the attachment means, and thus also hold the Murakoshi-Stewart-Sachs-Orr sensor in a rigid position relative to the vibratory surface." 1475-Petition, 63; 1476-Petition, 83. Thus, Ground 1C relies on the same accelerometer mounting system described in Stewart as for Ground 1A. As explained for Ground 1A, Stewart's bracket assembly would not hold the combination's accelerometer rigidly in place relative to its housing, the identified attachment means (case mounts), or the mounting surface (vibratory surface). *See* Section VII.C.

143. For Ground 1C, Apple asserts that "a POSITA would have understood that the bracket assembly's composition and structure would have different specifications (e.g., material, thickness, flexibility) than Murakoshi's vibratory surface." 1475-Petition, 63; 1476-Petition, 83. This is slightly different than Apple's assertion for Ground 1A, which stated only that a POSITA would have understood the bracket assembly's composition and structure would be different than the

vibratory surface because of differences "in material and/or thickness." 1475-Petition, 33; 1476-Petition, 35. However, Apple's support for this statement comprise only (a) citations to Murakoshi (paragraphs [0029], [0030], [0023]) (which do not discuss Stewart's bracket structure); and (b) Dr. Bederson's declaration. 1475-Petition, 63; 1476-Petition, 83.

144. The cited paragraphs in Dr. Bederson's declarations are identical. 1475-1003 ¶ 303; 1476-1003 ¶ 339. There, Dr. Bederson cites to Murakoshi for its discussion of the different iterations of the vibratory surface and their composition. 1475-1003 ¶ 303; 1476-1003 ¶ 339. He does not provide any support for his assertion that a POSITA would have understood that the flexibility of Stewart's bracket assembly would have been different than that of Murakoshi's vibratory surface. *See id.* For the same reasons explained above with respect to this element for Ground 1A, the asserted combination of Ground 1C does not disclose or suggest that the transmission portion is comprised of a flexibility different than the mounting surface.

145. However, even if one were to assume there was such a flexibility difference, the Ground 1C combination still relies on Stewart's mounting system as in Ground 1A. Thus, for the reasons provided above for Ground 1A, Ground 1C does not teach or suggest that the transmission portion sets a rigid position of the sensor relative to the mounting surface. *See* Section VII.C.

F. Ground 2A

146. Ground 2A (IPR2024-01475 only) asserts that both independent claims 1 and 10 are obvious (in addition to certain dependent claims). Ground 2A relies on the combination of Li-iFixit. As previously noted, because both Li-iFixit grounds are included only in IPR2024-1475, references to Apple's petition and exhibits are not distinguished from the petition and exhibits in IPR2024-1476.

1. The Asserted References

a. iFixit

147. Apple apparently uses iFixit (APPLE-1010) to identify the iPhone components of Li-iFixit, including the position of its existing accelerometer on the logic board and how the logic board was arranged within the phone. Petition, 71-73. I note that, although iFixit is the asserted basis for Grounds 2A-2B (Petition, iii, 9), Apple does not cite to it in its analyses of this ground but instead cites APPLE-1011 (which Apple's exhibit list describes as "iFixit iPhone 6 Teardown Report, archived by Internet Archive Wayback Machine on September 20, 2014, at https://web.archive.org/web/20140920142624/https://www.ifixit.com/Teardown/iPhone+6+Teardown/29213). To enable discussion of Apple's positions here, I will consider APPLE-1011 to also represent iFixit.

b. Li

148. Li teaches recognizing gestures on a "supplemental" surface of a device—e.g., the back of a phone or aftermarket case—using a "gesture detector." APPLE-1008, Abstract, [0020], [0035], [0041]. Gesture detector 42 is included in the body 26 of a device 20 (smartphone 22), or on a protective case 200, to detect physical gestures (e.g., taps) made on an outer surface. *Id.*, [0019]-[0020], [0041]; Figs. 1-2, 20A.

149. Li explains that the gesture detector is preferably a piezoelectric transducer 70." APPLE-1008 [0023]. At the same time, Li states that "the gesture detector 42 may be any device." *Id.* It should be obvious that a POSITA would not have understood Li to mean "any device," (which, if taken literally, could lead to ludicrous results) but only a sensor capable of carrying out the method disclosed in Li.

150. Li's preferred detector (the piezoelectric transducer) is capable of detecting mechanical and acoustic waves and contactless interactions by means of electrical charges on or in the body of the device. *Id.* [0024]-[0025]. Li explains that "Because the gesture detector 42 responds to physical gestures, the gesture detector 42 may be installed at any position or location on or in the body 26." APPLE-1008 [0027]. Gestures made on the supplemental surface area cause vibrations to "propagate through the body 26 as mechanical and/or acoustical waves." *Id.* [0030].

The detector therefore enables detection of gestures "over any portion of the body 26." *Id.* [0021]. That is, gestures made on the supplemental surface area cause vibrations in the body of the device, and therefore the gesture detector is mounted on or in the body so that it can sense the mechanical waves propagating through the body.

151. The detector is accordingly placed "proximate the supplemental gesture surface area," which may be on the body's outer surface, but it is "preferably adhered to an inner surface" of the body for added protection from physical damage. *Id.* [0035], Fig. 16 (showing detector mounted immediately beneath the surface).

152. Li states that "detector 42 may be disposed anywhere within the electronic device 20." *Id.* [0035]. As with Li's reference to "any device," a POSITA would not have understood that the detector could be mounted anywhere, but only in those locations where it would reliably detect the vibration waves propagated through the body from the gesture surface.

153. This is apparent based on Li's teaching that the gesture detector should be located in areas of the body which "adequately propagate waves or conducts charge." APPLE-1008 [0027]. Li makes this statement in the context of a discussion of an access door to a battery compartment, which Li explains may have a "discontinuous gap" around the door which "may attenuate transmission of waves … thus reducing or nullifying the output signal 52 produced by the gesture detector 42."

Id. Similarly, Li explains that when a protective case is used, the case "may also deaden or insulate the backside 40 from the user's gesture inputs," and therefore the detector should be added to the case surface itself instead of the device body, so that the sensor will "still sense vibration" from gestures made on or near the case. *Id.* [0040]-[0041]; Fig. 20A. In view of these disclosures, a POSITA would have reasonably understood that Li's detector would only reliably function when installed where it could reliably detect vibrations from gesture inputs made on the designated surface (whether the front or back of the device body or the surface of a protective case). APPLE-1008 [0028]. This is consistent with the understanding of a POSITA generally regarding the propagation of vibrations/mechanical waves, which are attenuated due to both distance and material interfaces (due to impedance mismatch). *See* Section VII.B.1.

154. Therefore, when the supplemental gesture surface area is the backside, Li teaches that mounting in a central region on the back enables detection over the area. *Id.* [0027], Fig. 8. When device configuration (such as the "discontinuous gap" discussed above) may attenuate transmission of vibration waves, the detector is disposed away from the source of the issue, near an end region (e.g., away from the gap). *Id.*; Fig. 9. When the supplemental gesture surface area is on the front of the device, the detector is disposed proximate the front of the device. *Id.* [0028]. The detector may "thus be installed at any location of the body 26 to detect the vibration

72 caused by gesture inputs"—that is, the detector may be installed in any location where it would reliably detect vibrations caused by the gestures made on the desired supplemental surface. *Id.*

155. Li specifically suggests installing its detector in an iPhone. APPLE-1008 [0033], Fig. 15. With regard to this embodiment, Li states that the body 26 may have multiple components such as bottom portion 120 and mating central portion 122. *Id.* The body "houses a circuit board 124" and "may have any number of mating components that protect the internal circuit board 124." *Id.* [0034]. Based on this, the circuit (or logic) board was not considered part of the body in Li. Rather, the body surrounds and protects the circuit board.

156. Figure 15 "illustrates the gesture detector 42 integrated into the assembly, proximate the bottom portion 120 of the body 26." *Id.* [0033]. The detector is not mounted on the circuit board, but has "an interface to the circuit board 124, such as a metallic strip or contact pad that conducts signals to/from the circuit board 124" or a "physical cable that plugs into a socket in the circuit board 124." *Id.* This same interface is used when the detector is externally mounted on a protective case. *Id.* [0041]. Based on these disclosures (as well as Li's specific teachings regarding placement of the detector discussed above), a POSITA would not have understood Li to suggest installing the detector on the circuit board. A POSITA would have recognized that the circuit board would not be "proximate" the

supplemental surface such that the detector could adequately detect vibrations from that surface propagating through the body, as explicitly taught by Li. This is also consistent with how a POSITA would have understood Li's preferred embodiment of a piezoelectric transducer would function. As previously discussed (*see* Section VII.B.1.b.), a piezoelectric transducer detects vibration when it is subjected to deformation from mechanical waves. It is this deformation which causes the transducer to generate an electrical signal (via the piezoelectric properties of the material). Thus, based on Li's teachings, a POSITA would have understood that mounting Li's detector on its circuit board to detect vibrations in Li's body contradicts Li's teachings that the mechanical waves generated from gestures made on the body would attenuate due to the distance and impedance mismatches encountered by the waves in traveling from the point of origin, across the body, to the screws holding the circuit board in place, to the circuit board, and through the circuit board (and any intervening components or materials) to the location of the transducer. The compounding effects of the multiple material interfaces and the additional distance the vibration waves would be required to traverse generate a very wide range of uncertainty with regard to the wave attenuation that would occur. It would have been very difficult (if not impossible), and certainly beyond the skill of a POSITA, to predict that such a location would successfully perform Li's method.

157. Li explains that its detector must be adhered or mounted to the body using various methods. These include an adhesive for adhering the detector to the body. APPLE-1008 [0035]. Here, Li explains that "the adhesive may be chosen to minimize attenuation as the vibration 72 travels through the adhesive." *Id.* That is, Li understood that attenuation through the flexible material of the adhesive could damp the vibration waves and prevent the detector from performing its intended function. Li also suggests that the detector may "be mechanically adhered, such as by fastener or weld." *Id.* In all instances, Li teaches that the detector should be directly mounted on the body using an attachment method chosen to minimize attenuation of the vibration signal. Based on Li's disclosure, a POSITA would have recognized that direct mounting to the body was required to carry out Li's method, as an indirect attachment would be expected to attenuate the vibrations propagating through the body, reducing or nullifying the output signal produced by the detector, as expressly taught by Li.APPLE-1008 [0027], [0030]. Again, this is consistent with the understanding of a POSITA regarding the effect of impedance mismatches on transmission of vibrations. *See* Section VII.B.1.

2. Whether a POSITA would have considered the challenged claims obvious in view of Ground 2A (Li-iFixit)

158. I understand that Apple asserts, for Ground 2A (Li-iFixit), that the combination implements "Li's gesture detection methodology" "in an iPhone using

internal components of an iPhone identified in iFixit." Petition, 73-74. The combination "includes an accelerometer mounted on the logic board, which is held in place in the iPhone body by screws, and is used to sense vibrations per Li." *Id.*, 74.

159. I discuss Apple's specific motivations to combine and reasonable expectation of success assertions in Section VII.F.2.b. below. Generally, however, Apple's assertions ignore Li's clear teachings regarding its sensor and its mounting, specifically that Li's detector was required to be directly mounted to the surface from which gestures would be detected (the body), and in a location "proximate" the specific area from which gestures would be detected (e.g., the front or back of the device, or the surface of a protective case) and where the device's configuration would not attenuate the propagation of vibration waves that would inhibit the detector from performing its intended purpose. Apple's positions are premised on the assumption that the iPhone's existing accelerometer, mounted on the logic board, was capable of sensing the vibrations necessary to carry out Li's method. However, I do not find any evidence supporting that assumption in the Petition or supporting exhibits, beyond assertions from Dr. Bederson that are not themselves supported and simply make the same assumption. Overall, it is my opinion that there was no motivation to combine Li and the iPhone 6 (as depicted in iFixit) in the manner suggested by Apple, nor would there have been a reasonable expectation that the

combination would have been capable of successfully implementing Li's method or control system.

a. Whether there was a Motivation to Combine or Reasonable Expectation of Success in Achieving the Claimed Invention

160. Apple's proposed combination of Li-iFixit is based on a simple assumption or syllogism: (a) Li teaches that its detector could sense vibrations from gestures made on a phone's outer surface; (b) the iPhone 6's existing accelerometer could detect vibrations; and therefore (c) the iPhone 6's existing accelerometer would have performed exactly the same as Li's detector. Petition, 73-77. First, it is not clear that the actual accelerometer installed in the iPhone 6 was designed and mounted with the intention of detecting vibrations. I have seen no evidence to that effect. While this is one function of accelerometers generally, it was not the function of all accelerometers as previously discussed. *See* Section VII.B.1. Also as previously discussed, the particular mounting method chosen for an accelerometer depended a great deal on the specific function for which it was installed. *Id.*

161. Even setting aside this issue, the problem with this assumption is that it ignores Li's teachings regarding the specific positioning and mounting of its detector. Merely because the iPhone's existing accelerometer could detect vibrations in the abstract does not suggest to a POSITA that it would do so, such that it could perform Li's gesture detection method, when placed in an entirely different location and with a different mounting—only indirectly attached to the phone body and

located on the phone's logic board. There is nothing in the Petition or supporting evidence that suggests this would have been reasonably expected by a POSITA, with the exception of Dr. Bederson's opinions. However, those opinions do not provide any basis for this conclusion, but merely assume that the existing accelerometer would do so. As discussed below, a POSITA considering Li's teachings would not have reasonably expected such a result.

i. Whether a POSITA would have understood that Li's gesture detector could be positioned on the iPhone's logic board.

162. A POSITA would have understood that Li taught that its gesture detector must be positioned proximate to the desired supplemental gesture surface area. "Proximate" as used in Li with regard to the location of the gesture detector means on or in the body of the phone (or protective case), and at least on the same side of the phone or case as the supplemental gesture surface area. *See* Section VII.F.1.b above; APPLE-1008 [0021], [0027]-[0028], [0040]-[0041]. Even then, Li teaches that the detector would only be expected to properly function when placed on or in the body where gaps, other components, or material interfaces would not be expected to attenuate the vibration waves. APPLE-1008 [0027], [0040]; Section VII.F.1.b. Therefore, a POSITA would have recognized that placement on the logic board would not place the detector "proximate" any of the outer surfaces of the body (the supplemental gesture surface area), because the detector would be isolated from

the body by internal gaps/discontinuities. On the logic board, vibrations that propagated through the body from gestures made on the outer surface would be attenuated because they would be required to travel both through the body, through the screws holding the logic board to the body, then across the logic board, through any intervening components or materials on the logic board, to the location of the existing accelerometer. As shown in the annotated diagram of the iPhone 6 logic board below, this involves—on the logic board alone—traversal of a series of material interfaces (with associated impedance mismatches) created by the various components on the logic board, from the screw locations (indicated with orange arrows) to the accelerometer (purple arrow):

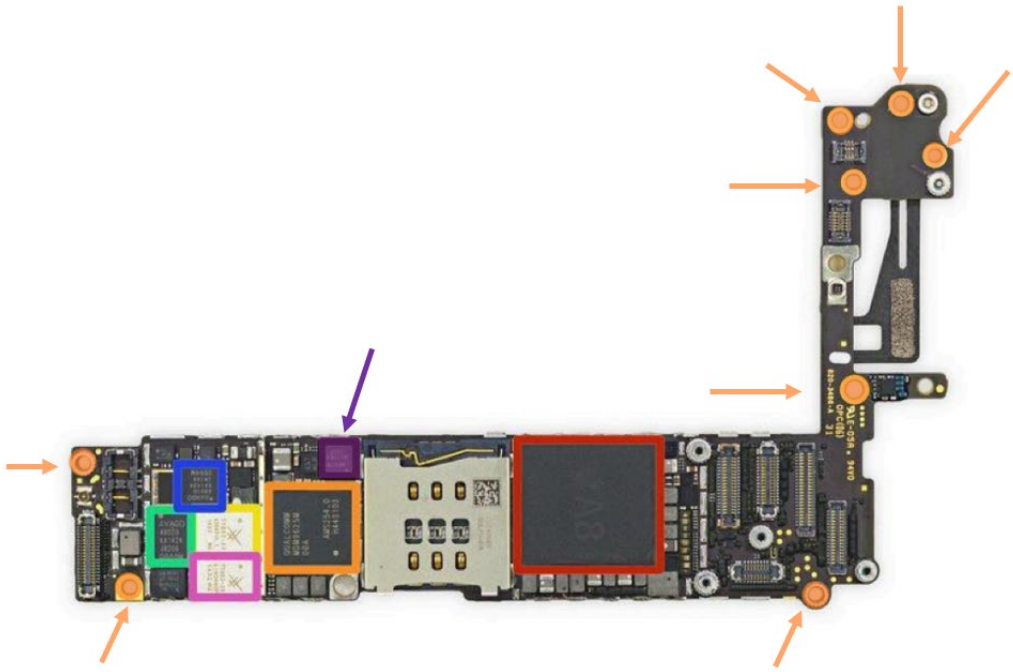

163. Alternatively, the vibration waves would be required to travel directly through the air gap between the accelerometer on the circuit board and the body. While a shorter route, the associated impedance mismatches due to the density differences in the air would have been expected to significantly damp the wave energy. This route would also require the vibration waves to pass through the EMI (electromagnetic interference) shields that cover the logic board and are positioned between the logic board and body. *See* APPLE-1011, 6 ("Step 14 … Up next is the logic board. While it's quite elegantly dressed in is EMI shields, we want to see what lies beneath that as well.").

164. Li teaches that the vibrations would be expected to attenuate due to the discontinuities between the body and the detector, consistent with a POSITA's expectation that impedance mismatches would damp the vibration waves generated from gestures made on the body's outer surface. APPLE-1008 [0027], [0040]; *See* Sections VII.B.1, VII.F.1.b. Both the distance and material interfaces and gaps separating the back surface from the logic board would have been expected to attenuate the vibration waves by the time they reached a detector placed on the logic board, as in the proposed combination.

165. This is why Li integrated its detector in the iPhone "proximate the bottom portion 120 of the body 26." APPLE-1008 [0033]. In this location, a POSITA would have recognized that Li taught the sensor would reliably detect the vibration

waves propagating through the body, as such waves will not have attenuated due to distance, material interfaces, or gaps. APPLE-1008 [0027], [0030], [0040]; *see* Section VII.B.1.

ii. Whether a POSITA would have understood that the detector could be indirectly mounted on the iPhone's logic board and successfully implement Li's method.

166. In addition to a location proximate the targeted supplemental gesture surface area, a POSITA would have understood from Li's disclosure that its method could only be successfully implemented by a detector directly mounted in or on the body. APPLE-1008 [0035]. Li requires direct mounting, which is made more clear due to Li's recognition that even when directly mounting the detector, the precise method chosen should minimize attenuation. *Id.*; Section VII.F.1.b. Accordingly, a POSITA in view of Li would not have reasonably predicted that mounting the detector (whether a piezoelectric transducer or another device, such as the iPhone's existing accelerometer) on the logic board, which is then attached to the body with screws (resulting in only an indirect mounting of the accelerometer to the body), would enable reliable detect vibrations on the body's gesture surface.

167. A POSITA recognized that this positioning would only indirectly connect the detector to the body, increasing the distance the vibration waves would be required to travel through the body to the differing material of the screws, and from the screws to the different material of the logic board, across the logic board,

and finally to the detector. Based on Li, a POSITA would have expected such mounting to cause attenuation of the vibrations such that the detector would not be able to reliably generate an output signal in response to the vibrations, due to the distance, material interfaces, and gaps the mechanical waves would be required to traverse. This is also consistent with the expectation of a POSITA—impedance mismatches would be expected to damp vibrations. *See* Section VII.B.1. Therefore, a POSITA would not have had a reasonable expectation that a detector mounted on the logic board would have been able to successfully detect vibrations generated by contacts on the outer surface of the device.

iii. Li's addition of its gesture detector to the iPhone despite the iPhone's existing accelerometer.

168. Because Li adds a gesture detector to an iPhone (as shown in Figure 15), it strongly suggests to a POSITA that the existing accelerometer positioned on the logic board was considered incapable of performing Li's gesture detection method. If that were not the case, logic suggests that Li would not have added its detector to the iPhone. That is, there would be no reason to add Li's detector if the existing accelerometer was capable of performing the detector's desired function. Therefore, a POSITA reviewing Li would not have reasonably expected or predicted that the existing accelerometer on the logic board could reliably perform Li's method, in addition to the reasons discussed above.

169. Neither Li nor iFixit contain any disclosure that would have supported a POSITA's conclusion that the iPhone's existing accelerometer could perform Li's method. Li never suggests arranging its detector on the logic board such that it is only indirectly connected to the phone body via the attachment between the logic board and the body. Instead, Li teaches that proximate, direct mounting was required to avoid attenuation. A POSITA would have expected, based on Li's teaching and based on the understanding of impedance mismatches discussed above (*see* Section VII.B.1.), that placement on the logic board would prevent the detector from sensing the vibration waves generated on the supplemental surface area.

170. I note that Li does not explicitly criticize using the iPhone's existing accelerometer. However, its statements regarding the preferred embodiment for its detector (a piezoelectric transducer, not an accelerometer), the addition of a detector in addition to the existing accelerometer, and Li's statements regarding detector location and mounting requirements, all inform a POSITA that the iPhone's existing accelerometer would not have been reasonably expected to successfully perform Li's method. *See* Section VII.F.1.b. Therefore, a POSITA would not have been motivated to use the existing accelerometer to carry out Li's method.

iv. Apple's inability to implement its "Back Tap" feature on the iPhone 6.

171. Apple's own materials suggest that the iPhone 6's existing accelerometer could not be used to perform Li's method or to otherwise detect

vibrations from gestures made on the back or outer surface of the device. Apple's CoreMotion is a framework that allows developers to access "motion data" (among other types) from the sensors built into Apple devices such as the iPhone 6. *See* https://developer.apple.com/documentation/coremotion/; Ex. 2019 at 1. Apple's description of CoreMotion has many references to acceleration, attitude/orientation, and rotation that indicate the purpose of the system, of which the accelerometer is a part, is to track the (inertial) motion of the iPhone, not to detect vibrations. *See id.* For example, in the "Getting raw accelerometer events" section of Apple's Core Motion documentation, the specific example given describes accessing the accelerometer data 50 times per second, which is too slow to be useful for reliably detecting mechanical vibrations. Ex. 2020, 3. The maximum possible rate of measuring the accelerometer data appears to vary from device to device, but the lowest maximum value is 100 Hz (100 times per second). *Id.*, 4. This is also too slow to be useful for vibration detection.

172. That this was the understanding of a POSITA prior to the '738 Patent is shown by Apple's inability to use such a feature on the iPhone 6 disclosed in iFixit. This model was the subject of "Bendgate." APPLE-1021 at 1 (explaining that the "iPhone 6s is marginally larger than the iPhone 6 due to its use thicker [sic] 7000 Series [aluminum] enclosure, preventing a recurrence of the 'bendgate' controversy from last year"). "Bendgate" refers to the fact that the body of the iPhone 6 could be

easily bent "just from the pressure of being stored in a trouser pocket" and Apple's denial (and subsequent acknowledgement) that this presented any issues. Ex. 2021 at 1-2. The iPhone 6 could not support the "Back tap" accessibility feature for iPhones, which I understand that Haptic alleges to infringe the '738 Patent. The first iPhone that included the back tap feature was the iPhone 8, which began sales in 2017. One explanation for this failure in the press was the "age of the sensor" (that is, the accelerometer). *See* Ex. 2022, 3 (explaining that "Back tap utilizes the gyroscope and accelerometer sensors to recognize … taps [on the back of the phone]" and that "the feature does work with iPhone 8 and new models … However, models older than the iPhone 8 are not compatible with backtap, due to the age of the sensors.").[7] Even if this is true, it indicates that there was no reasonable expectation of success in using the iPhone 6's existing accelerometer to implement Li's method. However, a POSITA would also have recognized that the flexibility of the iPhone 6 phone body itself would have prevented rigidly positioning the

[7] This article states that "Back tap is not exclusive to newer iPhone models as it does not require special hardware." Ex. 2022, 3. This does not indicate that the existing iPhone 6 accelerometer would have worked (which this article expressly states was not the case), but only that as of the date of the article, Apple was able to retroactively enable Back tap on certain older models (which did not include the iPhone 6).

accelerometer relative to the mounting surface (the flexible phone body) as required by the independent claims.

b. Analysis of Apple's Arguments and Evidence

i. Apple's First and Second Motivations

173. Apple's first and second motivations to combine are similar. Apple first asserts that "A POSITA would have been motivated to look to the components and systems within the iPhone to implement a gesture detection and control system, per Li, because Li illustrates the system using an iPhone and explicitly states that "[t]he electronic device 20 is illustrated as the popular IPHONE." Petition 74-75. Apple also asserts that "A POSITA would have understood from Li that the gesture detection method could be implemented in different electronic devices, including smartphones like the example iPhone that Li provides and would have been motivated to look to references like iFixit to understand the components of an iPhone to implement gesture detection in an iPhone." Petition, 75.

174. I agree with Apple that a POSITA would have been motivated to look at an iPhone to implement Li's gesture detection method, would have understood from Li that its method could be implemented on an iPhone, and that a POSITA would have relied on references like iFixit to understand the components of an iPhone when attempting to implement Li's method. However, I disagree that any of those motivations are a motivation to use the iPhone's existing accelerometer to

implement Li's method. Rather, they are motivations to implement Li's method on the iPhone in the exact manner suggested by Li—installing Li's gesture detector.

175. A POSITA reviewing Li would have understood that the iPhone that Li suggests for use with its system/method already possessed an accelerometer. Apple itself appears to acknowledge this in the Petition. Petition, 75. Further, a POSITA would have been aware that all iPhone models possessed an accelerometer. Ex. 2020, 1 ("All iOS [iPhone Operating System] devices have a three-axis accelerometer."). There is no reason to believe this basic fact was unknown to Li's inventors, who were apparently skilled in the art. Despite this, Li does not suggest that its method could be implemented using the existing accelerometer. Therefore, these asserted motivations do not qualify as motivations to combine Li with the iPhone 6 / iFixit, but only suggest to a POSITA to implement Li's method by adding the additional gesture detector to the iPhone, including positioning and mounting it as Li explicitly instructs.

ii. Apple's Third and Sixth Motivations

176. Apple's third motivation is that "A POSITA would have understood that an accelerometer (e.g., the accelerometer described by iFixit as being present in the iPhone) would have been capable of 'sens[ing] the vibration' and 'generat[ing] the output signal…in response to the vibration' to achieve gesture detection and control methods, per Li." Petition, 75. Apple cites to three pieces of evidence in

support of this assertion: APPLE-1011, 6-7; APPLE-1008, [0023]; APPLE-1003, ¶¶342, 39-43. *Id.*

177. APPLE-1011 at 6-7 notes that the iPhone 6 contains an "InvenSense MP67B 6-axis Gyroscope and Accelerometer Combo" on the logic board. APPLE-1011, 6-7. While this shows that the iPhone 6 did have an accelerometer, it does not support the conclusion that that particular accelerometer was capable of sensing the vibration and generating an output signal in response to the vibration when positioned on the logic board, and not directly mounted in or on the body of the device as Li directed.

178. The next citation is to Li (APPLE-1008) paragraph [0023]. This paragraph states that the gesture detector 42 is "preferably a piezoelectric transducer" that senses vibrations. APPLE-1008 [0023]. This supports the conclusion that Li's preferred sensor (a piezoelectric transducer) was capable of detecting the vibrations required to perform Li's method—when positioned and mounted as taught in Li. *See* Sections VII.F.1.b, VII.F.2.a. However, it does not suggest that the existing accelerometer positioned on the logic board and not directly mounted to the phone body was capable of doing so.

179. As discussed, Li explained that the vibrations generated on its supplemental gesture surface would propagate through the body (or the protective case), and that the detector must be mounted in a position on or in the body such that

it would detect those vibrations, and that the detector's mounting should be directly on the body using a method which minimized attenuation of the vibration waves. *See* Section VII.F.1.b. Neither of these references support the conclusion that a POSITA would have expected the existing accelerometer on the logic board, not directly mounted on or in the body, was capable of adequately detecting vibrations propagating through the body from gestures on the outside surface with the necessary accuracy to carry out Li's method. Further, given that the iPhone already had an accelerometer, Li's teaching to use a separate, directly mounted sensor strongly suggests that the existing accelerometer was not capable of carrying out Li's method. *See* Section VII.F.2.a.iii.

180. Apple next cites to Dr. Bederson's declaration (APPLE-1003, ¶¶342, 39-43). Petition, 75. Paragraph 342 contains the same statement as the Petition ("a POSITA would have understood that an accelerometer is a sensor (e.g., the accelerometer described by iFixit as being present in the iPhone) that is capable of 'sens[ing] the vibration' and 'generat[ing] the output signal…in response to the vibration.'" APPLE-1003 ¶ 342. Dr. Bederson likewise cites to paragraph 23 of Li, discussed above. He also cites to APPLE-1041 (page 27). *Id.* This exhibit, previously discussed, is allegedly a series of slides from a "Dr. Hisham El-Sherif" on piezoelectric transducers. The cited page does not discuss either the iPhone's existing MEMS accelerometer or the piezoelectric transducer in Li, but is a very

high level discussion of piezoelectric accelerometers. APPLE-1041, 27. I do not understand how Dr. Bederson believes this reference supports his assertion, as it contains no suggestion that the iPhone's existing accelerometer (which was certainly not a piezoelectric accelerometer), when positioned on the logic board, was capable of sensing vibrations from gestures on the outside surface.

181. Dr. Bederson further states that "Li describes a variety of sensors that can be used in the gesture detection method, and describes a piezoelectric sensor in particular for detecting the vibrations." APPLE-1003 ¶ 342. He then states that "A POSITA would have been aware that accelerometers are conventionally used to detect vibrations." *Id.* I agree with this statement in general. However, he proceeds to state that a POSITA "would have understood the piezoelectric transducer of Li to be an accelerometer because it senses vibrations (accelerations)." APPLE-1003 ¶ 342. I strongly disagree with this assertion. A POSITA would have understood that an accelerometer detects acceleration, not merely vibration. As previously explained (*see* Section VII.B.1.b.), generally all accelerometers require a proof mass,[8] and a piezoelectric transducer does not contain a proof mass and is not capable of detecting

[8] I am aware of some experimental accelerometer designs that did not require a proof mass, but to my knowledge they were not in commercial use as of the Critical Date (or today). None of them were piezoelectric transducers.

acceleration alone. A piezoelectric transducer is only one component of a piezoelectric accelerometer. No POSITA could have reasonably understood Li's transducer to be an accelerometer by itself. Nor would a POSITA have believed that a piezoelectric accelerometer (versus a transducer alone) could be used in an iPhone given their prohibitively large form factor and high power requirements. *See* Section VII.B.1.b.

182. Apparently, Dr. Bederson and Apple assert that merely because the existing accelerometer had the capability to detect vibrations in the abstract, it could detect whatever vibrations necessary to carry out Li's method no matter where it is located or how it is mounted. I find this unreasonable. As should be apparent, the mere fact that accelerometers were known to detect vibrations generally does not provide any reason to believe the iPhone 6's existing accelerometer would predictably work to detect gestures made on the back surface of the phone when positioned and mounted on the logic board. Unlike Li's detector, the existing accelerometer was not directly mounted to the body proximate the back surface. Therefore, based on Li's disclosure that the detector should be placed where vibration signals will not be attenuated (due, e.g., to "discontinuous gap[s]") and only where the body would be ensured to "adequately propagate waves," (APPLE-1008 [0027], [0035]), a POSITA would not have considered it reasonable to expect

the existing accelerometer would successfully carry out Li's method. *See* Section VII.F.2.a.

183. The next cited portion of Dr. Bederson's declaration is the "Accelerometer Basics" section (¶¶ 39-43). Petition, 75. Dr. Bederson also cites this section in paragraph 342 of his declaration. APPLE-1003 ¶ 342. I have previously detailed what this section covers and supports. *See* Section VII.C.3.b.i. This section contains nothing which suggests that the iPhone's existing accelerometer would have been considered capable of adequately sensing the vibrations caused by gestures on the phone's back surface when mounted on the iPhone's logic board.

184. Apple's sixth motivation is that "A POSITA would have understood that using the hardware in the iPhone, per iFixit, to implement a gesture detection system, per Li, does not require any additional component to be added to the device to detect vibrations." Petition, 76. This motivation requires as its underlying basis the third motivation—that the existing accelerometer would have actually been capable of performing Li's method. If it could not, then of course an additional component would be required. Therefore, it merely states the third motivation in another way, without explicitly stating the underlying assumption. Here, Apple cites again to Dr. Bederson's declaration (APPLE-1003 ¶ 346).

185. Dr. Bederson's cited testimony states:

> Sixth, a POSITA would have been motivated to incorporate

iFixit's teaching of an accelerometer mounted on a circuit board being held within the phone with screws in the context of Li *because the accelerometer shown in iFixit is already present on the phone's logic board and does not require an additional component to be added* to the device. APPLE-1008, [0033], Fig. 15; APPLE- 1011, 6-7. As described above, a POSITA would have looked to iFixit as a reference showing the actual internal components of the iPhone. APPLE-1011, 1. Using the existing accelerometer to detect vibrations as Li teaches *would have been a simpler solution that* [sic] *positioning an additional sensor* within an iPhone *or connecting an additional sensor* positioned on an outer surface to the iPhone's logic board. APPLE-1008, [0033], Fig. 15; APPLE-1011, 6-7. Using the existing accelerometer *requires no changes to the existing structures and internal layout* of the iPhone and would have been implemented by a POSITA using code rather than any additional hardware in the iPhone. Additionally, *using a component already within the iPhone* for detecting vibrations would decrease cost of implementing a system, as in Li, compared to adding an additional sensor to commercial smartphones. Because the gesture detection system is implemented simply through code controlling existing hardware (e.g., the iPhone's accelerometer) *no additional components need to be purchased and installed*. If the system required an additional component, the component would likely have a not insignificant cost associated with the design of a component that could be fit into the tight packaging of the iPhone body. *Using the existing accelerometer* avoids this potential cost.

APPLE-1003 ¶ 346 (italics added). Each of these italicized statements presume that the existing iPhone 6 accelerometer was capable of successfully implementing Li's system. In support, Dr. Bederson cites only to Li (APPLE-1008, [0033], Fig. 15) and APPLE-1011 (6-7). Paragraph 33 of Li merely details how Li suggests implementing its method in an iPhone—using an additional gesture detector, not the existing accelerometer. APPLE-1008 [0033]. APPLE-1011 merely details the existence of the iPhone 6's accelerometer. APPLE-1011, 1, 6-7. I find nothing in either that supports the conclusion that the existing accelerometer would have been reasonably expected to successfully implement Li's teachings. *See* Sections VII.F.1., VII.F.2.a.

186. Nothing in either of Apple's third or sixth motivations supports the contention that a POSITA would have been motivated to use the iPhone's existing accelerometer to carry out Li's method. A POSITA with full knowledge of Li's teachings and iFixit, would not have been motivated to use the existing accelerometer, based on Li's teaching that an additional sensor was required in an iPhone and based on Li's teaching that the additional sensor should be directly mounted in or on the body, proximate the location from which gestures will be detected. *See* Section VII.F.2.a. The iPhone's existing accelerometer was further removed from the supplemental surface area than Li's sensor, and only indirectly mounted to that surface via its placement on the logic board. *Id.*

iii. Apple's Fourth Motivation

187. Apple's fourth motivation is that "A POSITA would have understood that using an iPhone's existing accelerometer and other hardware in the Li-iFixit combination would minimize the phone's thickness as compared to adding additional components to the phone." Petition, 75 (citing APPLE-1003 ¶ 343).

188. As an initial matter, I find nothing in Li that suggests that inclusion of its additional sensor will affect the iPhone's form factor. APPLE-1008 [0033]-[0034], Fig. 15. More importantly, however, this alleged motivation strongly suggests that the existing accelerometer was not capable of performing Li's method. That is, given the lack of space, Li's teaching to add another sensor despite these space constraints indicates that the existing accelerometer could not detect the vibrations on the outer surface required to perform Li's method.

iv. Apple's Fifth Motivation

189. Apple's fifth motivation is that "A POSITA would have understood that using the existing accelerometer in the iPhone to detect vibrations achieves Li's requirements for the gesture detection method, including a sensor interfacing with a logic board and located close to the iPhone's back to detect taps and gestures on a back surface." Petition, 76. Apple again cites to Li (APPLE-1008 [0033], Fig. 15), APPLE-1011 (6-7) and Dr. Bederson's declaration (APPLE-1003 ¶¶ 344-345). *Id.*

190. Dr. Bederson's opinions here—that "A POSITA would have understood that a gesture sensor can be positioned within a phone, but that existing sensors within a smartphone, such as an iPhone, may also be used to detect vibrations for use in Li's gesture detection method," (APPLE-1003 ¶ 344) and that "a POSITA would have been motivated to make use of the existing accelerometer within the iPhone, and would have understood that the existing accelerometer described by iFixit would operate to detect vibrations just as Li teaches" (*id.* ¶ 345) do not state that the existing accelerometer would have been expected to work when positioned on the logic board, but only that the accelerometer would be expected to detect vibrations in the abstract. As discussed for Apple's third and sixth motivations, there is nothing in Li or iFixit that support the conclusion that the existing accelerometer would have reasonably been expected to successfully carry out Li's method.

191. Dr. Bederson also testifies that "A POSITA would have understood that the existing accelerometer within the iPhone, located on the logic board, would have met the requirements for positioning of the sensor that Li describes, and thus would have been able to sense vibrations on the body of the phone in the gesture detection method, per Li." APPLE-1003 ¶ 345. The only support for this is a citation to the same paragraph of Li discussed above, which merely details Li's teaching of how to add its additional gesture detector to the iPhone. *Id.*; APPLE-1008 [0033]. There is nothing in Li that suggests that the existing accelerometer would have reasonably

been expected to successfully form Li's method. Dr. Bederson's opinions that the existing accelerometer would have been able to do so are, therefore, without support.

192. I note that Dr. Bederson apparently understands Li to require merely that the detector "be located close to the back of the iPhone" and that this is met by the existing accelerometer. *Bederson* ¶ 344. However, this ignores Li's clear teachings regarding positioning of its detector proximate to the specific gesture surface—attached directly to the body at the front or back (depending on which is the supplemental surface)—as well as Li's guidance that the vibrations propagate through the body and may be attenuated by discontinuities or gaps. *See* Section VII.F.1.b. These disclosures in Li indicate that its detector was required to be more than merely located "close to the back of the iPhone," but was instead required to be positioned in or on the body of the phone, in a position where the device configuration would not inhibit vibration detection, and directly mounted in a manner that minimized attenuation. *See* Sections VII.F.2.b., VII.F.2.a.

193. As previously discussed, a POSITA would have expected that positioning an accelerometer on the logic board, where it is only indirectly connected to the phone body via screws, and where any vibration waves would necessarily be required to traverse the different material interfaces between the source of the gesture and the detector, would not have predictably or successfully implemented Li's method or system. Section VII.F.2.a.

v. Apple's Reasonable Expectation of Success Assertions

194. Apple finally asserts that:

> A POSITA would have understood that the combination of known elements according to known methods would have yielded predictable results, as each element performs a similar function combined as it does separately, the combination would have been well within a POSITA's skill at least because iFixit describes locations of components within the iPhone already described by Li as part of a gesture detection method. APPLE-1003, ¶¶347, 39-43. Accordingly, a POSITA would have had a reasonable expectation of success in doing so for the reasons explained above.

Petition 76-77. I understand that the question that must be answered is whether a POSITA would have reasonably expected each element to perform a similar function combined as it does separately (thereby generating predictable results).

195. Apple's evidence in support of this position is that iFixit describes the locations of components within an iPhone, which already includes an accelerometer. Petition, 76. However, merely because the iPhone possessed an existing accelerometer does not suggest that a POSITA would have expected the combination to successfully yield a workable implementation of Li's system. As discussed above, a POSITA would not have done so based on Li's teachings regarding the positioning and mounting of its detector. *See* Section VII.F.2.a.

196. The cited paragraphs of Dr. Bederson's declaration include the "Accelerometer Basics" section, which as previously discussed does not support the conclusion that the existing accelerometer would have reasonably been expected to succeed. Section VII.F.2.b.ii.

197. Apple also cites to paragraph 347 of Dr. Bederson's declaration. There, Dr. Bederson testifies that:

> It would have been obvious to a POSITA that the gesture detection methodology described by Li would have been implemented in an iPhone with the structures depicted in iFixit based on Li's suggestion to use an iPhone and the similar disclosures of smartphone structures for detecting vibrations in the two references. *Each element in the combination performs a similar function as it does separately*. A POSITA would have understood that implementing Li's gesture detection method in the iPhone does not require any extraordinary use of the accelerometer – *just the typical accelerometer function of detecting vibrations*…. A POSITA would have further had a reasonable expectation of success in implementing Li's gesture detection method using the accelerometer of an iPhone per iFixit based on Li's suggestion to do so (APPLE-1008, Fig. 15, [0033]) and based on a POSITA's understanding of the basic functions of accelerometers. *Supra* §VI.B.3 [Accelerometer Basics Section].

APPLE-1003 ¶ 347 (italics added). I note that in this testimony, as shown by the italicized portions, Dr. Bederson again simply assumes that because an

accelerometer could detect vibrations in the abstract, that the existing accelerometer would perform that function successfully in the combination. But that is the question that must be answered—would a POSITA have reasonably expected the iPhone 6's existing accelerometer it to do so? As discussed previously, there is nothing indicating that the existing accelerometer was installed for the purpose of detecting vibration, but rather only to detect motion. *See* Section VII.F.2.a. Further, based on Li's teachings and the understanding of a POSITA, a POSITA would not have reasonably expected the existing accelerometer to detect the vibrations required to perform Li's method. *See* Sections VII.F.1.-VII.F.2.a.

198. Dr. Bederson's opinions are also apparently based on his understanding that Li suggests using the existing accelerometer, as he states that "A POSITA would have further had a reasonable expectation of success in implementing Li's gesture detection method using the accelerometer of an iPhone per iFixit based on Li's suggestion to do so." APPLE-1003 ¶ 347. However, Li never suggests using the existing accelerometer but instead strongly suggests that the existing accelerometer could not carry out its method, requiring the additional detector. *See* Section VII.F.2.a.iii.

G. Ground 2B

199. Ground 2B consists of the Li-iFixit apparatus of Ground 2A in combination with Sachs. Petition, 103. Apple's application of the ground only

analyzes the elements of dependent claims 4, 5, and 11, and does not separately list the independent claim elements that are part of each of these claims. *Id.*, 105-106. Therefore, I understand that Ground 2B relies on Ground 2A for those elements. Thus, Ground 2B fails to render any claim unpatentable for the same reasons I explained above for Ground 2A. *See* Section VII.F.

VIII. CONCLUSION

200. I declare that all statements made herein of my knowledge are true, and that all statements made on information and belief are believed to be true, and that these statements were made with the knowledge that willful false statements and the like so made are punishable by fine or imprisonment, or both, under Section 1001 of Title 18 of the United States Code. I further declare under penalty of perjury under the laws of the United States of America that the foregoing is true and correct.

Dated: January 10, 2024

Jason Janét