University of Ljubljana
Faculty for mathematics and physics
Department of physics

Seminar

MEMS ACCELEROMETERS

Author: Matej Andrejašič

Mentor: doc. dr. Igor Poberaj

Marec 2008

Abstract:

MEMS accelerometers are one of the simplest but also most applicable micro-electromechanical systems. They became indispensable in automobile industry, computer and audio-video technology. This seminar presents MEMS technology as a highly developing industry. Special attention is given to the capacitor accelerometers, how do they work and their applications. The seminar closes with quite extensively described MEMS fabrication.

1 Introduction

An accelerometer is an electromechanical device that measures acceleration forces. These forces may be static, like the constant force of gravity pulling at our feet, or they could be dynamic - caused by moving or vibrating the accelerometer. There are many types of accelerometers developed and reported in the literature. The vast majority is based on piezoelectric crystals, but they are too big and to clumsy. People tried to develop something smaller, that could increase applicability and started searching in the field of microelectronics. They developed MEMS (micro electromechanical systems) accelerometers.

The first micro machined accelerometer was designed in 1979 at Stanford University, but it took over 15 years before such devices became accepted mainstream products for large volume applications [1]. In the 1990s MEMS accelerometers revolutionised the automotive-airbag-system industry. Since then they have enabled unique features and applications ranging from hard-disk protection on laptops to game controllers. More recently, the same sensor-core technology has become available in fully integrated, full-featured devices suitable for industrial applications [2].

Micro machined accelerometers are a highly enabling technology with a huge commercial potential. They provide lower power, compact and robust sensing. Multiple sensors are often combined to provide multi-axis sensing and more accurate data [3].

2 MEMS technology

What could link an inkjet printer head, a video projector DLP system, a disposable bio-analysis chip and an airbag crash sensor - yes, they are all MEMS, but what is MEMS? Micro Electro Mechanical Systems or MEMS is a term coined around 1989 by Prof. R. Howe [2] and others to describe an emerging research field, where mechanical elements, like cantilevers or membranes, had been manufactured at a scale more akin to microelectronics circuit than to lathe machining.

It appears that these devices share the presence of features below $100\mu m$ that are not machined using standard machining but using other techniques globally called micro-fabrication technology. Of course, this simple definition would also include microelectronics, but there is a characteristic that electronic circuits do not share with MEMS. While electronic circuits are inherently solid and compact structures, MEMS have holes, cavity, channels, cantilevers, membranes, etc, and, in some way, imitate 'mechanical' parts. The emphasis on MEMS based on silicon is clearly a result of the vast knowledge on silicon material and on silicon based microfabrication gained by decades of research in microelectronics. And again, even when MEMS are based on silicon, microelectronics process needs to be adapted to cater for thicker layer deposition, deeper etching and to introduce special steps to free the mechanical structures. MEMS needs a completely different set of mind, where next to electronics, mechanical and material knowledge plays a fundamental role. Then, many more MEMS are not based on silicon and can be manufactured in polymer, in glass, in quartz or even in metals...[2].

The development of a MEMS component has a cost that should not be misevaluated and the technology has the possibility to bring unique benefits. The reasons that prompt the use of MEMS technology are for example miniaturization of existing devices, development of new de-

vices based on principles that do not work at larger scale, development of new tools to interact with the micro-world. Miniaturization reduces cost by decreasing material consumption. It also increases applicability by reducing mass and size allowing to place the MEMS in places where a traditional system doesn't fit. A typical example is brought by the accelerometer developed as a replacement for traditional airbag triggering sensor also used in digital cameras to help stabilize the image or even in the contact-less game controller integrated in the latest handphones. Another advantage that MEMS can bring relates with the system integration. Instead of having a series of external components (sensor, inductor...) connected by wire or soldered to a printed circuit board, the MEMS on silicon can be integrated directly with the electronics [2]. These so called smart integrated MEMS already include data acquisition, filtering, data storage, communication, interfacing and networking [4]. As we see, MEMS technology not only makes the things smaller but often makes them better.

The MEMS component currently on the market can be broadly divided in six categories (Table 2.1), where next to the well-known pressure and inertia sensors produced by different manufacturer like Motorola, Analog Devices, Sensonor or Delphi we have many other products. The micro-fluidic application are best known for the inkjet printer head popularized by Hewlett

Product category	**Examples**
Pressure sensor	Manifold pressure (MAP), tire pressure, blood pressure.. .
Inertia sensor	Accelerometer, gyroscope, crash sensor...
Microfluidics / bioMEMS	Inkjet printer nozzle, micro-bio-analysis systems, DNA chips...
Optical MEMS / MOEMS	Micro-mirror array for projection (DLP), micro-grating array for projection (GLV), optical fibre switch, adaptive optics...
RF MEMS	High Q-inductor, switches, antenna, filter.. .
Others	Relays, microphone, data storage, toys...

Table 2.1; MEMS products examples. The MEMS component currently on the market can be broadly divided in six categories [2].

Packard, but they also include the growing bioMEMS market with micro analysis system like the capillary electrophoresis system from Agilent or the DNA chips. Optical MEMS (MOEMS) includes the component for the fibre optic telecommunication like the switch based on a moving mirror produced by Sercalo. Moreover MOEMS deals with the now rather successful optical projection system that is competing with the LCD (liquid crystal display) projector. RF (radio frequency) MEMS is also emerging as viable MEMS market. Next to passive components like high-Q inductors produced on the IC surface to replace the hybridized component as proposed by company MEMSCAP we find RF switches and soon micromechanical filters. But the list does not end here and we can find micromachined relays (MMR) produced for example by Omron, HDD (hard disk drive) read/write head and actuator or even toys, like the autonomous micro-robot EMRoS produced by EPSON [2].

3 MEMS accelerometers

3.1 The basics

There are many different ways to make an accelerometer. Some accelerometers use the piezoelectric effect - they contain microscopic crystal structures that get stressed by accelerative forces, which causes a voltage to be generated. Another way to do it is by sensing changes in capacitance [3]. This seminar is focused on the latter.

Capacitive interfaces have several attractive features. In most micromachining technologies no or minimal additional processing is needed. Capacitors can operate both as sensors and actuators. They have excellent sensitivity and the transduction mechanism is intrinsically insensitive to temperature. Capacitive sensing is independent of the base material and relies on the variation of capacitance when the geometry of a capacitor is changing. Neglecting the fringing effect near the edges, the parallel-plate capacitance is [4]:

$$C_0 = \epsilon_0 \epsilon \frac{A}{d} = \epsilon_A \frac{1}{d}, \tag{1}$$

where $\epsilon_A = \epsilon_0 \epsilon A$ and A is the area of the electrodes, d the distance between them and ϵ the permittivity of the material separating them. A change in any of these parameters will be measured as a change of capacitance and variation of each of the three variables has been used in MEMS sensing. For example, whereas chemical or humidity sensor may be based on a change of ϵ, accelerometers have been based on a change in d or in A. If the dielectric in the capacitor is air, capacitive sensing is essentially independent of temperature but contrary to piezoresitivity, capacitive sensing requires complex readout electronics. Still the sensitivity of the method can be very large and, for example, Analog Device used for his range of accelerometer a comb capacitor having a suspended electrode with varying gap. Measurement showed that the integrated electronics circuit could resolve a change of the gap distance of only $20pm$, a mere $1/5$th of the silicon inter-atomic distance [2].

Typical MEMS accelerometer is composed of movable proof mass with plates that is attached through a mechanical suspension system to a reference frame, as shown in Figure 3.1. Movable plates and fixed outer plates represent capacitors. The deflection of proof mass is measured using the capacitance difference [4]. The free-space (air) capacitances between the movable plate and two stationary outer plates C_1 and C_2 are functions of the corresponding displacements x_1 and x_2:

$$C_1 = \epsilon_A \frac{1}{x_1} = \epsilon_A \frac{1}{d+x} = C_0 - \Delta C, \qquad C_2 = \epsilon_A \frac{1}{x_2} = \epsilon_A \frac{1}{d-x} = C_0 + \Delta C. \tag{2}$$

If the acceleration is zero, the capacitances C_1 and C_2 are equal because $x_1 = x_2$. The proof mass displacement x results due to acceleration. If $x \neq 0$, the capacitance difference is found to be

$$C_2 - C_1 = 2\Delta C = 2\epsilon_A \frac{x}{d^2 - x^2}. \tag{3}$$

Measuring ΔC, one finds the displacement x by solving the nonlinear algebraic equation

$$\Delta C x^2 + \epsilon_A x - \Delta C d^2 = 0. \tag{4}$$

This equation can be simplified. For small displacements, the term $\Delta C x^2$ is negligible. Thus, $\Delta C x^2$ can be omitted. Then, from

$$x \approx \frac{d^2}{\epsilon_A} \Delta C = d \frac{\Delta C}{C_0} \tag{5}$$

one concludes that the displacement is approximately proportional to the capacitance difference ΔC [4].

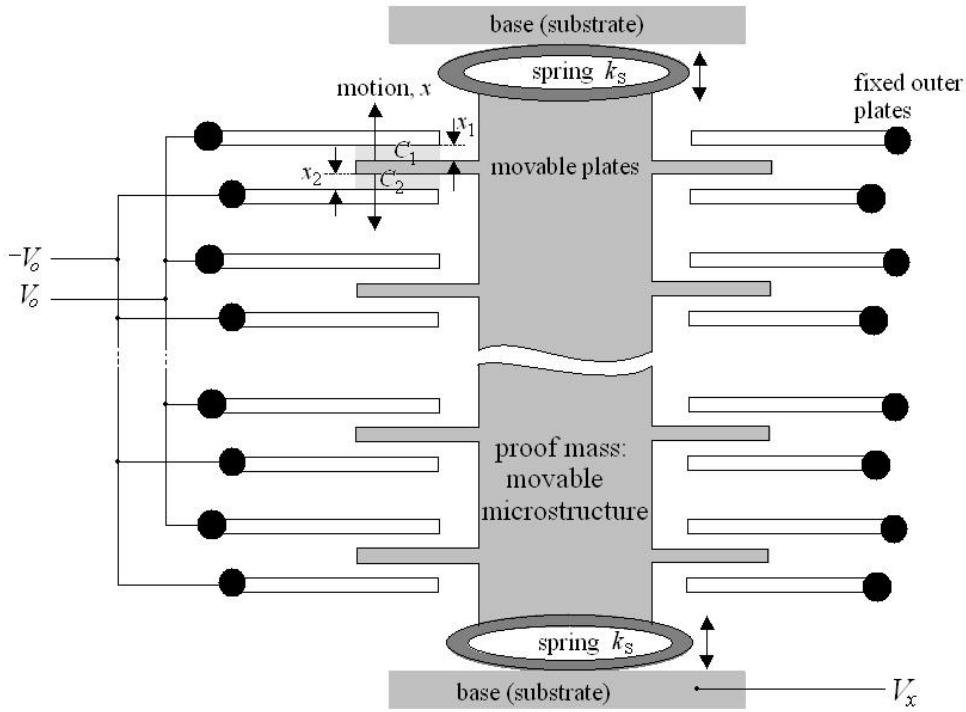

Figure 3.1; Accelerometer structure. Proof mass is attached through springs (k_S: spring constant) at substrate. It can move only up and down. Movable and fixed plates construct capacitors [4].

As one can see in the Figure 3.1, every sensor has a lot of capacitor sets. All upper capacitors are wired parallel for an overall capacitance C_1 and like wise all lower ones for overall capacitance C_2, otherwise capacitance difference would be negligible to detect. Equation 5 now doesn't hold true just for one pair of capacitors, but for all system. Let's see now how does a simplified electric circuit, that measures capacitance change, look like (Figure 3.2). As an example we will describe Analog Devices accelerometer ADXL05 [5], that has 46 pairs of capacitors. Sensor's fixed plates are driven by 1MHz square waves with voltage amplitude V_0 coming out of oscillator. Phases of the square waves that drives upper and lower fixed plates differs for $180°$. One can picture to himself this hole system as a simple voltage divider whose output goes forward through buffer and demodulator. First of all we are interested in voltage output V_x, that is actually the voltage of the proof mass. It holds true that

$$(V_x + V_0)C_1 + (V_x - V_0)C_2 = 0 \tag{6}$$

and if we use Equations 2 and 5 we get for voltage output

$$V_x = V_0 \frac{C_2 - C_1}{C_2 + C_1} = \frac{x}{d} V_0. \tag{7}$$

V_x is square wave with the right amplitude proportional to acceleration. We also can't just simply use this output signal, because it is weak and noisy [6]. When there is no acceleration ($a_1 = 0$), the proof mass doesn't move, and therefore, the voltage output is zero. If we accelerate the sensor ($a_1 > 0$), the voltage output V_x changes proportional to alternating voltage input V_0 (Equation 7). To avoid signal attenuation, we read V_x with voltage follower (buffer), therefore signal V_y is actually V_x multiplied by 1. If we inverse the acceleration ($a_1 < 0$), signals V_x and V_y get negative sign. Demodulator then gives us the sign of the acceleration, because it multiplies the input signal V_y with the square waves V_0 coming from oscillator. Now we finally have voltage output V_{out} with the right sign of acceleration and the right amplitude.

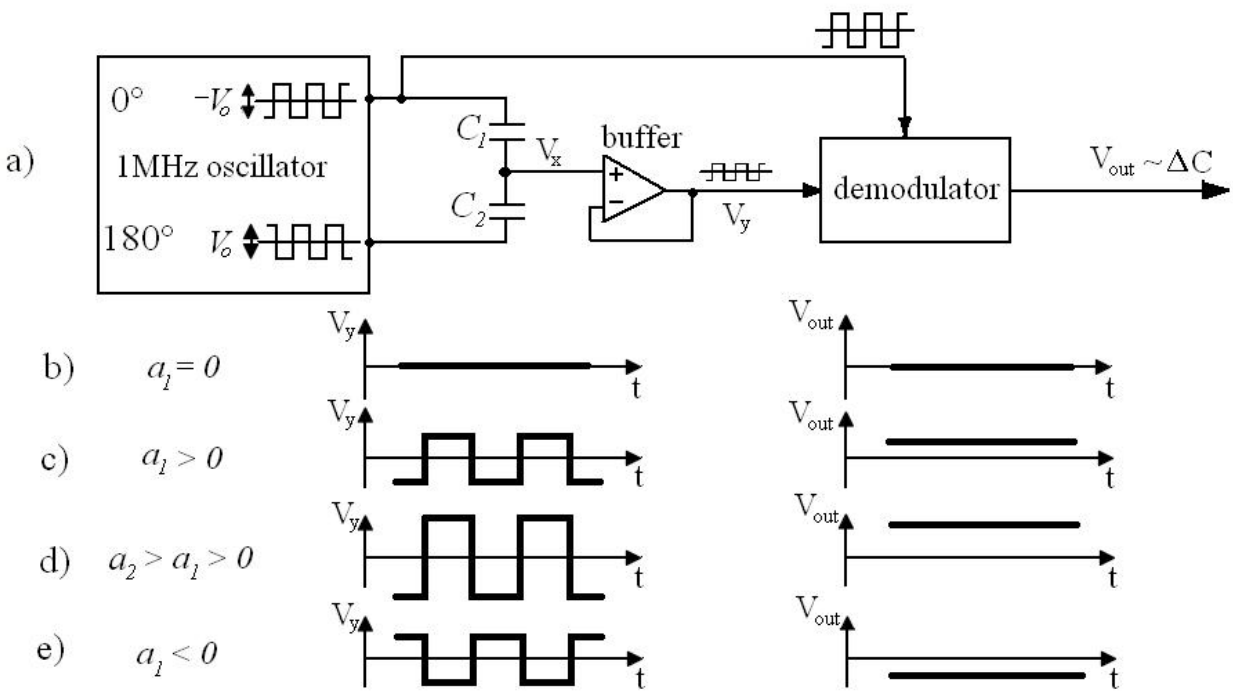

Figure 3.2; a) Electric circuit that measures acceleration through capacitor changes. b) If acceleration is zero, voltage output is also zero. c)→ e) When acceleration isn't zero, we get with the voltage follower square wave with the right amplitude and after demodulator voltage output V_{out} with the right amplitude and the right sign [5,6,7].

For an ideal spring, according to Hook's law, the spring exhibit a restoring force F_S which is proportional to the displacement x. Thus, $F_S = k_S x$, where k_S is the spring constant. From Newton's second law of motion, neglecting the air friction (which is negligibly small), the following differential equation results $ma = md^2x/dt^2 = k_S x$ [4]. Thus, the acceleration, as a function of the displacement, is

$$a = \frac{k_S}{m} x. \tag{8}$$

Then, making use of Equation 7, the acceleration is found to be proportional to voltage output

$$a = \frac{k_S d}{m V_0} V_x. \tag{9}$$

There are some interesting facts and numbers we can state. The mass of the proof mass mentioned above is approximately $0.1\mu g$, the smallest detectable capacitance change is $\approx 20aF$ and gaps between capacitor plates are approximately $1.3\mu m$ [8].

This was the simplest example of one axis accelerometer. It's capacitance changes due to changes of distance d between capacitor plates (Equation 1). If one includes sets of capacitors turned in perpendicular directions, one can get two axis or even three axis accelerometer (Figure 3.3).

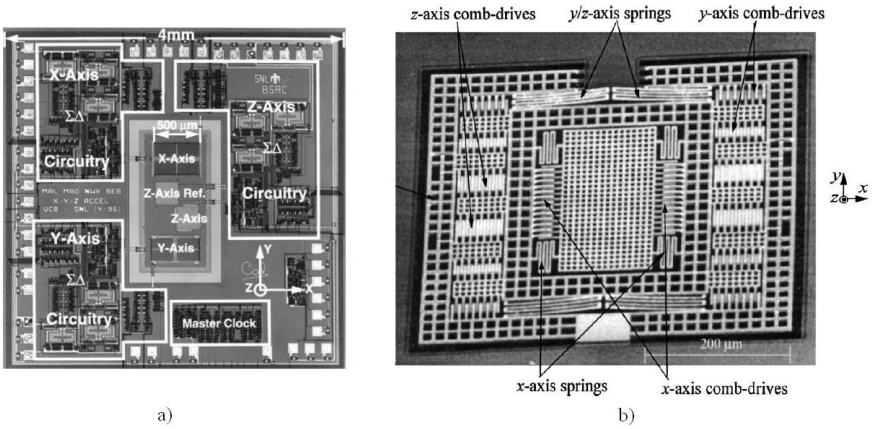

Figure 3.3; a) 3D accelerometer structure. It has three different sensors for x-/y-/z-axis acceleration and three different electronic circuitry for each axis [9]. b) 3D accelerometer structure without electronics. All three sensors are linked with the same proof mass [4].

In the last few years scientists came up with some new ideas that can be used at MEMS accelerometers. Dr. Richard Waters (Space and Naval Warfare Systems Center San Diego - SPAWAR) was able to envision an accelerometer based on Fabry-Perot interferometer technology that could offer equal or greater performance at a lower cost than those currently in use. "In fact, it was a device that achieved world-record sensitivity right out of the box," said Brad Chisum, formerly of SPAWAR [10].

Let's see some of the important parameters accelerometer have. First and foremost, one must choose between an accelerometer with analog output or digital output. Then there is number of axis and measurement range. A $\pm 1.5g$ accelerometer will be more than enough for gravity measurements, $\pm 2g$ to measure the motion of a car and at least $\pm 5g$ or more for a project that experiences very sudden starts or stops. Then we have sensitivity and bandwidth. Bandwidth is the frequency we use to measure changes in acceleration. Frequency of the oscillator has to be a lot bigger than bandwidth frequency, because electronic circuit must read changes in capacitance faster than acceleration changes and demodulator needs a certain number of cycles before it calculates output [5,7].

Since MEMS accelerometers are used in many systems, noise characteristics of these devices are also very important. Analog Devices ADXL05 has voltage noise density typically around $500\mu g/\sqrt{Hz}$, newer ADXL202E $200\mu g/\sqrt{Hz}$ [5,7]. Like we see from the unit, voltage noise changes with inverse square root of the bandwidth. Faster we have to read accelerometer changes (vibration in compare with car driving), worse accuracy we get. The noise characteristics will influence the performance of the accelerometers especially when operating at lower g conditions, since there is smaller output signal. One can conclude that there are three primary

noise sources in a typical MEMS accelerometer measurement: from the mechanical vibration of the springs, from the signal conditioning circuitry and from the measurement system itself. If one measure the noise characteristics of analog device MEMS accelerometer (Analog Devices ADXL190) operating at $0g$, $+1g$ and $-1g$ (Figure 3.3), one can conclude from the results that MEMS accelerometer noise sources have $1/f$ -type noise characteristics at low frequencies and white Gaussian noise at high frequencies. The magnitude of the noise PSD (power spectrum density) at $\pm 1g$ are slightly higher than the magnitude of noise PSD at $0g$. One can conclude that the additional magnitude is caused by the mechanical vibration of the springs when the device are at $\pm 1g$ [11].

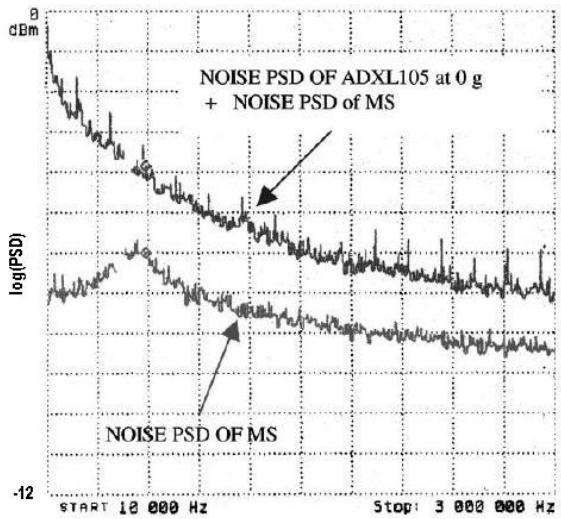

Figure 3.3; Figure shows the noise characteristics of MEMS accelerometer Analog Devices ADXL190 operating at $0g$. The total noise power spectral density (PSD) of the accelerometer being measured is plotted together with the noise PSD of the measurement system (MS) [11].

3.2 Applications

Accelerometers are being incorporated into more and more personal electronic devices such as media players and gaming devices. In particular, more and more smartphones (such as Apple's iPhone and the Nokia N95) are incorporating accelerometers for step counters, user interface control, and switching between portrait and landscape modes. They use accelerometers as a tilt sensor for tagging the orientation to photos taken with the built-in camera. The Nokia 5500 sport features a 3D accelerometer that can be used for tap gestures, for example to change to next song by tapping through clothing when the device is in a pocket. Camcorders use accelerometers for image stabilization. Still cameras use accelerometers for anti-blur capturing. Some digital cameras, such as Canon's PowerShot and Ixus range contain accelerometers to determine the orientation of the photo being taken and also for rotating the current picture when viewing [12].

Accelerometers are also being used in new contactless game controller or mouse. IBM and Apple have recently started using accelerometers in their laptops to protect hard drives from damage. If you accidentally drop the laptop, the accelerometer detects the sudden freefall, and

switches the hard drive off so the heads don't crash on the platters [2].

In a similar fashion, high g accelerometers are the industry standard way of detecting car crashes and deploying airbags at just the right time. They are used to detect the rapid negative acceleration of the vehicle to determine when a collision has occurred. They also have a built-in self-test feature, where a micro-actuator will simulate the effect of deceleration and allow checking the integrity of the system every time you start up the engine. Recently the gyroscopes (they rely on a mechanical structure that is driven into resonance and excites a secondary oscillation in either the same structure or in a second one, due to the Coriolis force [13]) made their apparition for anti-skidding system and also for navigation unit. The widespread use of accelerometers in the automotive industry has pushed their cost down dramatically [2, 14].

Accelerometers have also found real-time applications in controlling and monitoring military and aerospace systems. Smart weapon systems (direct and indirect fire; aviation-launched and ship-launched missiles, rockets, projectiles and sub munitions) are among these applications [14]. Some MEMS sensors have already been used in satellite. The development of micro (less than 100kg) and nano (about 10kg) satellites is bringing the mass and volume advantage of MEMS to good use [2].

4 MEMS fabrication

Micro-fabrication is the set of technologies used to manufacture structures with micrometric features. This task can unfortunately not rely on the traditional fabrication techniques such as milling, drilling, turning, forging and casting because of the scale. The fabrication techniques had thus to come from another source. As MEMS devices have about the same feature size as integrated circuits (IC), MEMS fabrication technology quickly took inspiration from microelectronics. Techniques like photolithography, thin film deposition by chemical vapor deposition (CVD) or physical vapor deposition (PVD), thin film growth by oxidation and epitaxy, doping by ion implantation or diffusion, wet etching, dry etching, etc have all been adopted by the MEMS technologists. Moreover, MEMS also grounded many unique fabrication techniques that we will describe in this seminar like bulk micromachining, surface micromachining, deep reactive ion etching (DRIE), etc [2].

In general, MEMS fabrication tries to use batch process to benefit from the same economy of scale that is so successful in reducing the cost of ICs. As such, a typical fabrication process starts with a wafer (silicon, polymer, glass...) that may play an active role in the final device or may only be a substrate on which the MEMS is built. This wafer is processed in a succession of processes (Table 4.1) that add, modify or remove materials along precise patterns [2].

Additive process	**Modifying process**	**Substractive process**
Evaporation	Oxydation	Wet etching
Sputtering	Doping	Dry etching
CVD	Annealing	Sacrificial etching
Spin-coating	UV exposure	Development
...	...	...

Table 4.1; Process classification [2]. We will explain some of them in this seminar.

The problem of patterning a material (or making layout) is generally split in two distinct steps: first, deposition and patterning of a surrogate layer that can be easily modified locally. In the most common process called photo-patterning, the surrogate layer used is a special polymer (called a photoresist) which is sensitive to UV-photon action (Figure 4.1).

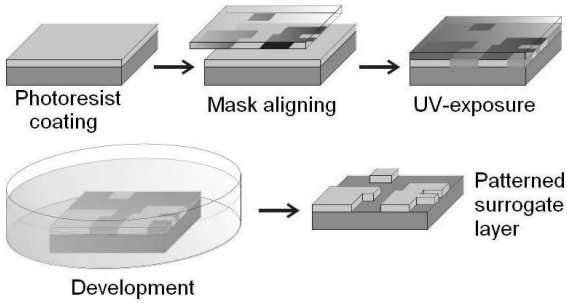

Figure 4.1; Photo-patterning. The photoresist is first coated on the substrate as a thin-film. Then it is exposed to UV radiation through a mask. The mask has clear and opaque regions according to the desired pattern, the clear regions allowing the photoresist to be exposed to UV radiation and modifying it locally. After development the surrogate layer patterned over the whole surface of the wafer can be used for pattern transfer [2].

Now we have to transfer the pattern to the material of interest. There are two main techniques that can be used to transfer the pattern: lithography and lift-off (Figure 4.2). Combination of photo-patterning and lithography is known as photolithography and is nowadays the most common techniques for micro-fabrication, lying at the roots of the IC revolution [2].

This is how the basics of MEMS or at least patterned wafers, that will be used in further process, are made. Technologically very important and also quite expensive step in process is packaging. It can present even more than 50% of final product cost [2]. Lets now look in detail at some materials and some processes or techniques that can be used during MEMS process. We already mentioned some above.

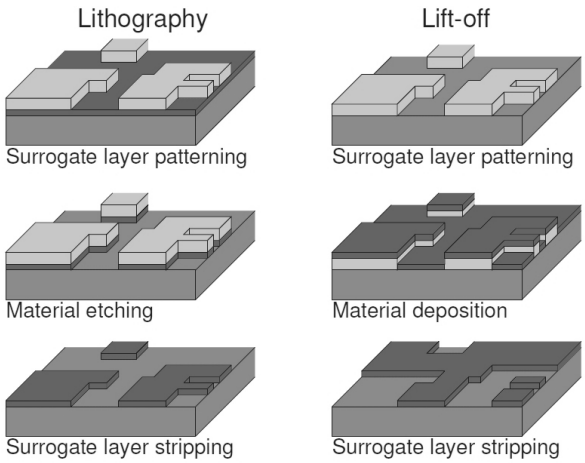

Figure 4.2; Pattern transfer by lithography and lift-off. In lithography the patterned layer allows exposing locally the underlying material. The exposed material is then etched physically or chemically before we finally remove the protective layer. For lift-off, we deposit the material on top of the patterned layer. Complete removal of this layer (called a sacrificial layer) leaves the material only in the open regions of the pattern [2].

4.1 The MEMS materials

The choice of a good material for MEMS application is no more based like in microelectronics on carrier mobility, but on more mechanical aspect: small or controllable internal stress, low processing temperature, compatibility with other materials, possibility to obtain thick layer, patterning possibilities...[2].

From microelectronics' root MEMS has retained the predominant use of silicon and its compounds, silicon (di)oxide (SiO_2) and silicon nitride (Si_x N_y). It is an excellent mechanical material. Silicon is almost as strong but lighter than steel, has large critical stress and no elasticity limit at room temperature as it is a perfect crystal ensuring that it will recover from large strain. Unfortunately it is brittle and this may pose problem in handling wafer, but it is rarely a source of failure for MEMS components. For sensing application silicon has a large piezoresistive coefficient, and for optical MEMS it is transparent at the common telecommunication wavelengths. Silicon nitride is even stronger than silicon and can be deposited in thin layer with an excellent control of stress to produce $1\mu m$ thick membrane of several cm^2. There is also silicon carbide (SiC) in use. SiC has unique thermal properties (albeit not yet on par with diamond) and has been used in high temperature sensor [2].

But silicon and its derivative are not the only choice for MEMS, many other materials are also used because they posses some unique properties. For example, quartz crystal (strong piezoelectric effect), glass (forms tight bond with silicon, bio-compatibility), polymers (biodegradability and bioabsorbability, versatility, thermoplastic property), metals (conductivity, ability to be grown in thin-films),...[2].

4.2 Bulk micromachining

Bulk micromachining refers to the formation of micro structures by removal of materials from bulk substrates. We said that bulk substrate in wafer form can be silicon, glass, quartz, crystalline Ge, SiC, GaAs, GaP or InP. The methods commonly used to remove excess material are wet and dry etching, allowing varying degree of control on the profile of the final structure [2].

4.2.1 Isotropic and anisotropic wet etching

Wet etching is obtained by immersing the material in a chemical bath that dissolves the surfaces not covered by a protective layer. The main advantages of the technique are that it can be quick, uniform, very selective and cheap. The etching rate and the resulting profile depend on the material, the chemical, the temperature of the bath, the presence of agitation, and the etch stop technique used if any. We have isotropic and anisotropic etching. Isotropic etching happens when the chemical etches the bulk material at the same rate in all directions, while anisotropic etching happens when different etching rate exists along different directions [2].

For substrates made of homogeneous and amorphous material, like glass, isotropic wet etching is usually observed. However, for crystalline materials, e.g. silicon, the etching is either isotropic or anisotropic, depending on the type of chemical used. In general, isotropic etchers are acids, while anisotropic etchers are alkaline bases. Figure 4.3 compares isotropic and anisotropic wet etching of silicon. The top-left inset shows isotropic etching of silicon when

the bath is agitated ensuring that fresh chemical constantly reaches the bottom of the trench and resulting in a truly isotropic etch. Isotropic wet etching is used for thin layer or when the rounded profile is interesting, to obtain channels for fluids for example. For silicon, the etcher can be HNA, which is a mixture of hydrofluoric acid (HF), nitric acid (HNO_3), and acetic acid (CH_3COOH). The isotropic etching rate for silicon can reach $80\mu m/min$. Etching under the mask edge is unavoidable with isotropic wet etching [2].

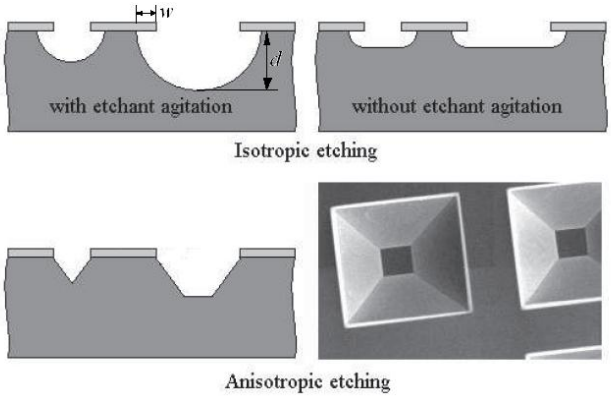

Figure 4.3; It is impossible to obtain etching in only one direction. This is commonly quantified by estimating the overetch (w/d), that is the lateral etch with respect to the vertical etch. This parameter may range between 1 for isotropic etching to about 0.01 for very anisotropic etch [2].

To achieve anisotropic etching of silicon we usually need the right choice of chemicals. The most common are potassium hydroxide (KOH), tetramethyl ammonium hydroxide (TMAH) and ethylene diamine pyrocatechol (EDP). The etching anisotropy has its roots in the different etch rates appearing for different crystal planes because they have different density of electrons. Experiments with etching of silicon have shown that some planes act as etch stoppers as etching rates along directions perpendicular to these planes are substantially lower than about other directions. So we can get trapezoid-like cavity, almost vertical walls... Etch velocity range between $1\mu m/min$ to only $2.5nm/min$ in different crystal planes [2]. With different combinations of wafer orientations and mask patterns, very sophisticated structures such as cavities, grooves, cantilevers, through holes and bridges can be fabricated. The chemical used during anisotropic etching are usually strong alkaline bases and requires a hard masking material that can withstand the solution without decomposing or peeling. In general a non-organic thin-film is used, for example, silicon oxide mask is commonly used with TMAH, while silicon nitride is generally used with KOH [2].

4.2.2 Dry etching

Dry etching is a series of methods where the solid substrate surface is etched by gaseous species. The etching can be conducted physically by ion bombardment (ion etching or sputtering and ion-beam milling), chemically through a chemical reaction occurring at the solid surface (plasma etching or radical etching), or by mechanisms combining both physical and chemical effects (reactive ion etching or RIE). Usually the etching is more anisotropic and vertical when the etching is more physical, while it is more selective and isotropic when it is more

chemical. Most of these methods are used in microelectronics but MEMS necessitates deeper etching ($> 5\mu m$) [2].

Typical values for aspect ratio for features (Figure 4.4) range between 1 (isotropic etch) and 50, for very anisotropic etching like the DRIE process [2].

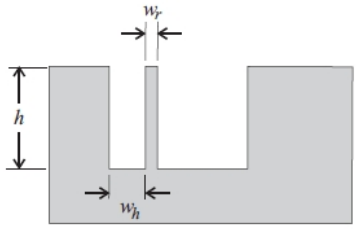

Figure 4.4; We usually define an aspect ratio for features (h/w_r) and for holes (h/w_h). Most technologies give better results with features than with holes - but generally with only a small difference [2].

To improve the aspect ratio of the etching, several techniques have been developed, usually trying to increase the anisotropy by protecting the sidewalls during etching. For example we can continuously deposit polymer on the sidewall during the etch or even better, by alternate steps of etching, grow oxide layer on the sidewall [2].

4.2.3 Wafer bonding

Wafer bonding is an assembly technique where two or more precisely aligned wafers are bonded together. This method is at the frontier between a fabrication method and a packaging method and belong both to front-end and back-end process. Wafer bonding has the potential to simplify fabrication method because structures can be patterned on two or more wafers and after bonding they will be part of the same device, without the need for complex multi-layer fabrication process. Of course epoxy bonding can be used to bond wafers together but much better MEMS techniques do exist. The most commonly used MEMS bonding methods is probably anodic bonding which is mainly used to bond silicon wafers with glass wafers. The technique work by applying a high voltage to the stacked wafers that induce migration of ion from glass to silicon, allowing a strong field assisted bond to form. This technique is commonly used to fabricate sensors allowing for example to obtain cavities with controlled pressure for pressure sensor. At the same time, the glass wafer provides wafer level packaging, protecting sensitive parts before back-end process [2].

4.3 Surface micromachining

Unlike bulk micromachining in which microstructures are formed by etching into the bulk substrate, surface micromachining builds up structures by adding materials, layer by layer, on the surface of the substrate. The thin film layers are typically $15\mu m$ thick [2], some acting as structural layer and others as sacrificial layer. Dry etching is usually used to define the shape of the structure and supporting layers, and a final wet etching step releases them from the substrate by removing the supporting sacrificial layer. A typical surface micromachining process sequence to build a micro bridge is shown in Figure 4.5.

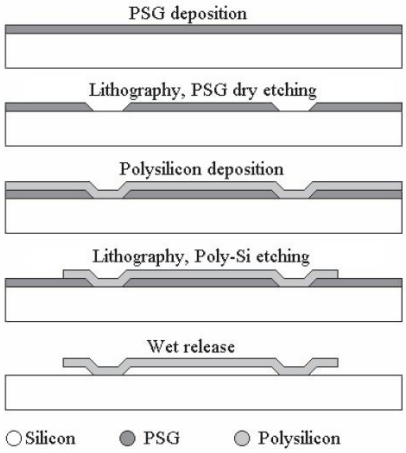

Figure 4.5; Basic process sequence of surface micromachining. Phosphosilicate glass (PSG) is first deposited and patterned to form the sacrificial layer. Then a structural layer of polysilicon is added and also patterned. Finally, the PSG sacrificial layer is etched away and the polysilicon bridge is released [2].

4.3.1 Thin-film fabrication

Common thin-film fabrication techniques are the same as those used in microelectronics fabrication like oxidation (in dry or in wet oxygen), chemical vapor deposition (CVD) at atmospheric (APCVD) or more often at low pressure (LPCVD), sputtering, e-beam or thermal evaporation, spin-coating...[2] The choice of the thin-film and its fabrication method is dictated by many different considerations, as the temperature, the magnitude of the residual stress in the thin-film (too much stress cause layer cracking), the conformality of the thin-film (how the thin-film follows the profile of the substrate as shown in Figure 4.6), the roughness of the thin-film, the existence of pinholes, the uniformity of the thin-film, the speed of fabrication... For surface micromachining we also need to consider an additional condition: the compatibility between sacrificial and structural layers (Table 4.2)[2].

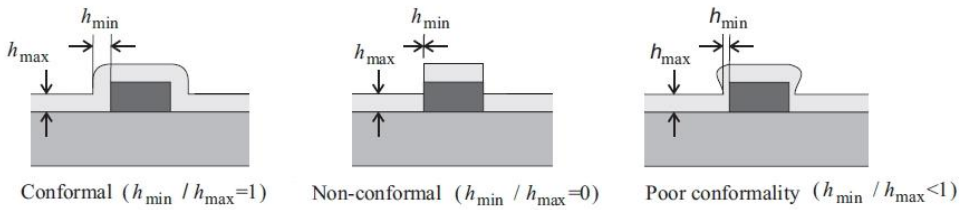

Figure4.6; Conformality of layer deposited over a ridge [2].

As a large variety of materials such as polysilicon, oxide, nitride, PSG, metals, diamond, SiC and GaAs can be deposited as thin film and many layers can be stacked, surface micromachining can build very complicated micro structures.

4.4 DRIE micromachining

Deep reactive ion etching (DRIE) micromachining shares features both from surface and bulk micromachining. DRIE uses high-density plasma to produce long vertical walls, by applying

Structural material	Sacrificial material	Etcher
Polysilicon	Oxide(PSG, LTO, etc)	Buffered HF
Si_3N_4	Poly-Si	KOH
SiO_2	Poly-Si	EDP/TMAH
Aluminum	Photoresist	Acetone/O_2 plasma
Polyimide	Cu	Ferric chloride
Ti	Au	Ammonium iodide
SiO_2, Si_3N_4, metal	Poly-Si	XeF_2

Table 4.2; Combination of materials and etcher for surface micromachining. The selection of a suitable sacrificial material depends on the structural material and particularly on the availability of an etching method that can selectively etch the sacrificial material without significantly etching the structural materials or the substrate. A few common combinations of structural material and etching method are shown in this table, but the list is endless [2].

anisotropic etching through a two phase sequence composed of etching and protective layer deposition. With DRIE we can build much more complex structures. Figure 4.7 shows a simplified process on silicon-on-oxide (SOI) wafer using (DRIE), a special MEMS dry etch technique allowing large etching depth with very vertical side walls. This simple, yet powerful, technique needs only one mask to obtain working devices, and it is understandably used in commercial products.

Other methods exist where no material is removed but this time molded to achieve the desired pattern. LIGA, a German acronym for lithography, electroforming, and molding is the mother of these methods. LIGA makes very high aspect ratio 3-D microstructures with non-silicon materials such as metal, plastic or ceramics using replication or molding [2].

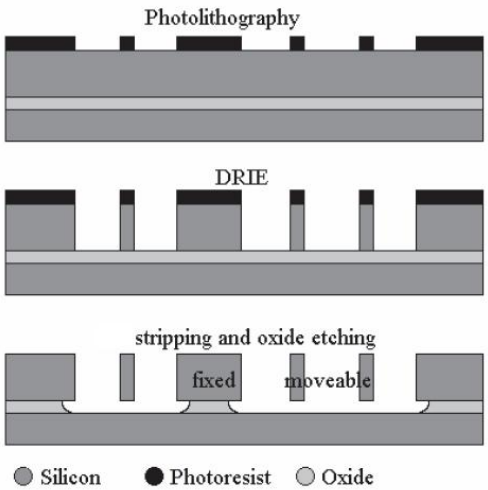

Figure 4.7; Bulk micromachining of SOI wafer by DRIE. The SOI wafers has thickness between 10 and $200\mu m$. After photolithography, the wafer is etched with DRIE to form high aspect ratio silicon structures. The buried silicon dioxide acts as an effective etching stop. Stripping off the protective photoresist and then etching the sacrificial layer of the oxide to release the microstruc- ture finish the device [2].

5 Conclusion

Although some products like pressure sensors have been produced for 30 years, MEMS industry in many aspects is still a young industry. MEMS will undoubtedly invade more and more consumer products. Size of MEMS is getting smaller, frequency response and sense range are getting wider. MEMS are more and more reliable and their sensitivity better every day. Prices of MEMS accelerometers and other MEMS devices aren't excessive, but they still have to drop a lot if we want to expand massive consumption. Standardization of production, testing and packaging MEMS would certainly do a big part at it. The relatively long and expensive development cycle for a MEMS component is a hurdle that needs to be lowered and also less expensive micro-fabrication method than photolithography has to be pursued.

We can be sure that the future for MEMS is bright. At least because, as R. Feynman stated boldly in his famous 1959 talk, which inspired some of the MEMS pioneers, because, indeed, "There's plenty of room at the bottom!" [2].

References

[1] I. Lee, G. H. Yoon, J. Park, S. Seok, K. Chun, K. Lee, *Development and analysis of the vertical capacitive accelerometer*, Sensors and Actuators A 119 (2005) 8-18

[2] F. Chollet, H. Liu, *A (not so) short introduction to MEMS* (http://memscyclopedia.org/introMEMS.html (18.2.2008))

[3] S. Beeby, G. Ensell, M. Kraft, N.White, *MEMS mechanical sensors* (Artech house inc., USA, 2004)

[4] S. E. Lyshevski, *Mems and Nems: systems, devices and structures* (CRC Press LLC, USA, 2002)

[5] http://www.analog.com/UploadedFiles/Obsolete_Data_Sheets/66309706ADXL05.pdf (10.3.2008)

[6] B. E. Boser, "Electronics for micromachined inertial sensors," in Transducers Dig. of Tech. Papers, pp. 1169-1172, June 1997.

[7] http://www.analog.com/en/prod/0,,764_800_ADXL202%2C00.html (10.3.2008)

[8] http://www.analog.com/en/content/0,2886,764%255F800%255F122115%255F0,00.html (14.2.2008)

[9] C. T. Leondes, *Mems/Nems Handbook techniques and applications, Volume 4: Sensors and actuators* (Springer, USA, 2006)

[10] http://rfdesign.com/military_defense_electronics/news/accelerometer_proves_accurate_0509/ (14.2.2008)

[11] F. Mohn-Yasin, C. E. Korman, D. J. Nagel, *Measurement of noise characteristics of MEMS accelerometers* Solid-State Electronics 47 (2003) 357-360

[12] http://en.wikipedia.org/wiki/Accelerometer (14.2.2008)

[13] S. Beeby, G. Ensell, M. Kraft, N.White, *MEMS mechanical sensors* (Artech house inc., USA, 2004)

[14] http://www.sensorsmag.com/articles/0399/0399_44/main.shtml (14.2.2008)