e-book

An Engineer's Guide to Current Sensing

A collection of technical content on current sensing designs

Texas Instruments

TI.com/technologies/current-sensing-solutions.html

DELL/HP/LENOVO EXHIBIT 1015
Page 1

Table of contents

Introduction 3

1. Current sense amplifier overview

Introduction to Current Sense Amplifiers 4

Integrating the Current Sensing Signal Path 6

Integrated, Current Sensing Analog-to-Digital Converter 8

Integrating the Current Sensing Resistor 11

Common uses for Multi-Channel Current Monitoring 13

2. Out-of-range current measurements with current-sense amplifiers

Measuring Current to Detect Out-of-Range Conditions 15

Monitoring Current for Multiple Out-of-Range Conditions 17

High-Side Motor Current Monitoring for Overcurrent Protection 19

3. Current sense amplifier application examples

Shunt-Based Current-Sensing Solutions for BMS Applications in HEVS and EVS 21

12-V Battery Monitoring in an Automotive Module 23

Simplify Voltage and Current Measurement in Battery Test Equipment 25

Current Sensing Applications in Communication Infrastructure Equpiment 28

Safety and Protection for Discrete Digital Outputs in a PLC System using Current Sense Amplifiers 30

Current Sensing in High-Power USB Type-C® Applications 32

4. Current sense amplifiers in switching systems

Low-Drift, Precision, In-Line Motor Current Measurements with PWM Rejection 35

High-Side Drive, High-Side Solenoid Monitor with PWM Rejection 38

Current Mode Control in Switching Power Systems 40

Switching Power Supply Current Measurements 42

Increase Measurement Accuracy using High-Speed Amplifiers for Low-Side Shunt Current Monitoring 44

5. Extending common-mode range and isolated current measurements

Extending Beyond the Max Common-Mode Range of Discrete Current-Sense Amplifiers 46

Interfacing a Differential-Output (Isolated) Amp to a Single-Ended Input ADC 48

Low-Drift, Precision, In-Line Isolated Magnetic Motor Current Measurements 50

6. Current Sensing in Mobile Robots

7. Current Sensing in Collaborative and Industrial Robotic Arms

8. How to optimize PoE systems using discrete current sensing

Additional resources 52

DELL/HP/LENOVO EXHIBIT 1015
Page 2

Introduction

Designers have many options when addressing the challenges associated with designing an accurate current-measurement circuit for cost-optimized applications. Approaches range from using general-purpose operational amplifiers to analog-to-digital converters, whether stand-alone or embedded in a microcontroller. This expansive variety of approaches provides flexibility for designers of current sensing applications – allowing them specifically to address their unique design challenges.

This e-book was created to further simplify the current sensing design process by helping you quickly and efficiently narrow down the list of potential devices that align best with your particular system's requirements. The current sensing information featured in this e-book address specific applications, focusing on identifying the most optimized device to best serve the challenges faced in that particular application and offer alternative solutions that may be beneficial for other circuit optimizations.

Although this e-book is not an exhaustive collection of current-sensing challenges, it does address many of the more common and challenging functional circuits seen today. If you have any questions about the topics covered here or any other current-sensing questions, submit them to the **TI E2E™ design support forums Amplifiers forum**.

Authors:
Scott Hill
Dennis Hudgins
Kurt Eckles
Mubina Toa
Zhao Tang
Guang Zhou
Dan Harmon
Peter Iliya
Kevin Zhang
Maka Luo
Raphael Puzio
Ben Damkroger
Kyle Stone
Arjun Prakash
Leaphar Castro
Steven Loveless
Tom Hendrick

DELL/HP/LENOVO EXHIBIT 1015
Page 3

Product Overview

Introduction to Current Sense Amplifiers

Introduction

What are Current Sense Amplifiers?

Current sense amplifiers, also called current shunt monitors, are specialized differential amplifiers with a precisely matched resistive gain network with the following characteristics:

- Designed to monitor the current flow by measuring the voltage drop across a sense element, typically a shunt resistor.
- Tend to be easier to use, more precise, and less prone to noise.
- Support currents from 10s of µA to 100s of A.
- Natively-support common-mode voltages from –16 to +80 V and with additional circuitry up to 100s of volts.

System Benefits Addressed by Using Current Sense Amplifiers

- Real-time overcurrent protection
- Current and power monitoring for system optimization
- Current measurement for closed-loop feedback

Key Parameters

Common Mode Range This specification defines the DC voltage range at the input of an amplifier with respect to ground. Current sense amplifiers are typically designed to support common-mode voltages well beyond the chip supply voltage. For example, the INA240 is capable of supporting a common-mode voltage between –4 V to +80 V while running on a supply as low as 2.7 V.

Offset Voltage This is a differential DC error at the input of the amplifier. Historically, to reduce the impact of amplifiers with high offsets, larger value shunt resistors were used to increase the measured voltage drop. Today, TI is able to offer current sense amplifiers with offsets as low as 10 µV, enabling higher-precision measurements at low currents and allowing the use of smaller value shunt resistors for improved system efficiency.

Gain Current sense amplifiers come with various gain options that have robust performance over temperature and process variations by integrating a precisely-matched resistive gain network. The gain options for fixed gain amplifiers vary from 0.125 V/V to 1000 V/V with gain errors as low as 0.01%.

Temperature Stability Current sense amplifiers integrate the amplifier along with all the gain-setting resistors which enables small and unified temperature drift. This allows for robust current measurements across the whole specified temperature range. The achieved temperature stability is one of the key advantages current sense amplifiers have over discrete implementations.

Analog Output

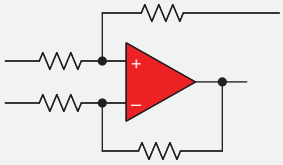

Integrates the full analog signal processing and provides a voltage or current output.

Digital Output

Integrates the full signal conditioning path and utilizes a standard two-wire digital interface.

Comparator Output

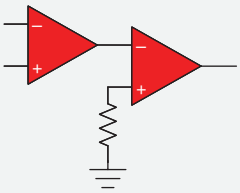

Provides a simple ALERT signal when the load current exceeds a threshold.

Integrated Shunt

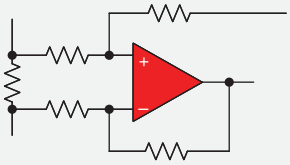

Offers a low-drift, precision-integrated sense element.

DELL/HP/LENOVO EXHIBIT 1015
Page 4

Copyright © 2022 Texas Instruments Incorporated

Key Design Considerations

High-Side Measurements

Sensing between supply bus and load.

System Advantages:

- Able to detect load short to ground
- Current is monitored directly from the source
- High immunity to ground disturbance

System Challenges:

- High bus voltage limits the availability of high input common-mode voltage devices

Advantages Over Discrete Current Sense Circuit:

- Integrated gain resistors provide excellent matching to enable higher performance
- Reduction in board space requirements
- Unique input architecture allows for the common-mode voltage to greatly exceed the device supply voltage

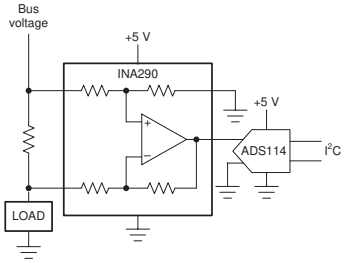

Low-Side Measurements

Sensing between the load and ground.

System Advantages:

- Simple to implement and low-cost solution
- Wide range of available options

System Challenges:

- Difficult to detect load short to ground
- System ground disturbance by the shunt resistor

Advantages Over Discrete Current Sense Circuit:

- Integrated gain resistors provide excellent matching enable higher performance
- Reduction in board space requirements
- Sense a true differential measurement across the shunt resistor
- Lower V_{OFFSET} saves system power by enabling the use of smaller value shunt resistors to achieve the same error level

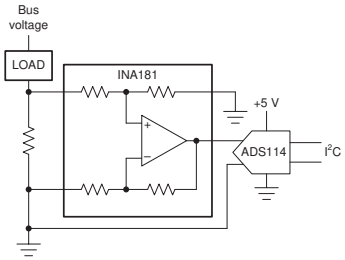

In-line Measurements

Sense current in-line to the load.

System Advantages:

- True phase current at all times reduces phase-to-phase errors
- Best current feedback for greatest accuracy

System Challenges:

- PWM common-mode voltage seen by amplifier
- High common-mode voltage combined with high dV/dT poses steep challenge to many amplifiers

INA240 Advantages Over Discrete Current-Sense Circuit:

- Enhanced PWM rejection provides high levels of suppression for large common-mode transients (dV/dT) in systems that use PWM signals

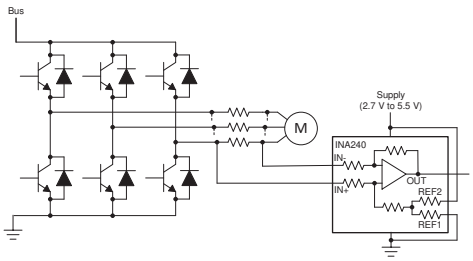

DELL/HP/LENOVO EXHIBIT 1015
Page 5

Copyright © 2022 Texas Instruments Incorporated

Application Brief

Integrating the Current Sensing Signal Path

Scott Hill *Current Sensing Products*

Current measurements are used in electronic systems to provide feedback verifying operation is within acceptable margins and to detect potential fault conditions. Analyzing a system's current level can diagnose unintended or unexpected operating modes allowing for adjustments to be made to improve reliability or to protect the system components from damage.

Current is a signal that is difficult to measure directly. However, there are several measurement methods that are capable of measuring the effect of flowing current. Current passing through a wire produces a magnetic field that can be detected by magnetic sensors (hall-effect and fluxgate for example). Current measurements can also be made by measuring the voltage developed across a resistor as current passes through. This type of resistor is called a current sensing, or shunt, resistor.

For current ranges reaching up to 100 amps on voltage rails below 100 volts, measuring current with shunt resistors are typically preferred. The shunt resistor approach commonly provides a physically smaller, more accurate and temperature stable measurement compared to a magnetic solution.

For the system's current information to be evaluated and analyzed, it must be digitized and sent to the system controller. There are many methods for measuring and converting the signal developed across the shunt resistor. The most common approach involves using an analog front-end to convert the current sensing resistor's differential signal to a single-ended signal. This single-ended signal is then connected to an analog to digital converter (ADC) that is connected to a microcontroller. Figure 1 illustrates the current sensing signal chain.

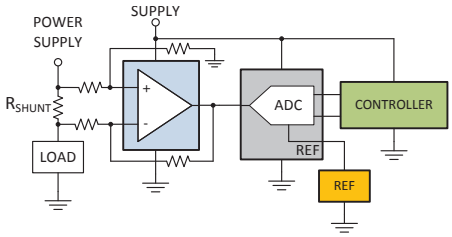

Figure 1. Current Sensing Signal Path

To optimize the current sensing signal chain, the shunt resistor value and amplifier gain must be appropriately selected for the current range and full-scale input range of the ADC. The selection of the shunt resistor is based on a compromise between measurement accuracy and power dissipation across the shunt resistor. A large value resistor will develop a larger differential voltage as the current passes through. The measurement errors will be smaller due to the fixed amplifier offset voltage. However, the larger signal creates a larger power dissipation across the shunt resistor (P = I2R). A smaller shunt resistor develops a smaller drop across the shunt resistor reducing the power dissipation requirements but also increases the measurement errors as the amplifier's fixed offset errors become a larger percentage of the signal.

The amplifier gain is selected to ensure that the amplifier's output signal will not exceed the ADCs full-scale input range at the full-scale input current level.

The INA210 is a dedicated current sense amplifier that integrates the external gain setting resistors as shown in Figure 2. Bringing these gain resistors internal to the device allows for increased matching and temperature drift stability compared to typical external gain setting resistors. Space saving QFN packages significantly reduce the board space requirements of an operational amplifier and external gain resistors. Current sense amplifiers are commonly available in multiple fixed gain levels to better optimize the pairing with shunt resistor values based on the input current and ADC full-scale input ranges.

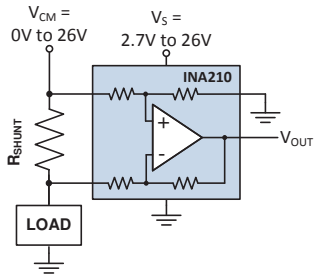

Figure 2. INA210: Current Sensing Amplifier

DELL/HP/LENOVO EXHIBIT 1015
Page 6

Copyright © 2021 Texas Instruments Incorporated

Figure 1 shows the operational amplifier measuring the differential voltage developed across the shunt resistor and sending the amplified signal to the single ended ADC. A fully differential input ADC can monitor the differential voltage directly across the shunt resistor. One drawback to using a typical ADC is reduced input range used. The signal developed across a shunt resistor will be small to limit the power dissipation requirements of this component. Lower ADC resolutions will also impact the small signal measurement accuracy.

The ADC reference will also be an additional error source that must be evaluated in this signal path. A typical ADC will feature an input range that is based on the converter's reference voltage. The actual reference voltage range varies from device to device but is typically in the 2 V to 5 V range. The LSB (least significant bit) is based on the full-scale range and resolution of the converter. For example, a 16-bit converter with a full-scale input range of 2.5 V, the LSB value is roughly 38 µV.

The INA226 is a specialized ADC designed specifically for bi-directional current sensing applications. Unlike typical ADCs, this 16-bit converter features a full-scale input range of +/- 80 mV eliminating the need to amplify the input signal to maximize the ADC's full-scale input range. The INA226 is able to accurately measure small shunt voltages based on the device's maximum input offset voltage of 10 µV and an LSB size of 2.5 µV. The INA226 provides 15 times more resolution than the equivalent standard 16-bit ADC with a full-scale input range of 2.5 V. The specialization of the INA226 makes this device ideal for directly monitoring the voltage drop across the current sensing resistor as shown in Figure 3.

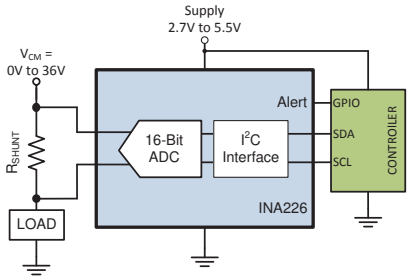

Figure 3. Digital Current/Power Monitor

In addition to the ability to directly measure voltage developed across the shunt resistor as current passes through, the INA226 can also measure the common-mode voltage. The INA226 has an input multiplexer allowing the ADC input circuitry to switch between the differential shunt voltage measurement and the single-ended bus voltage measurement.

The current sensing resistor value present in the system can be programmed into a configuration register on the INA226. Based on this current sensing resistor value and the measured shunt voltage, on-chip calculations convert of the shunt voltage back to current and can provide a direct readout of the corresponding power level of the system. Performing these calculations on-chip reduces processor resources that would normally be required to convert this information.

Alternate Device Recommendations

For applications with lower performance requirements, using the INA199 still takes advantage of the benefits of the dedicated current sense amplifier. For applications implementing over-current detection, the INA301 features an integrated comparator to allow for on-chip over-current detection as fast as 1µs. For applications with lower performance requirements, using the INA219 is able to take advantage of the specialized current sensing ADC.

Table 1. Alternative Device Recommendations

Device	Optimized Parameter	Performance Trade-Off
INA199	Lower Cost	Higher V_{OS} and Gain Error
INA301	Signal Bandwidth, On-Board Comparator	Larger Package: MSOP-8
INA219	Smaller Package Digital Monitor, Lower Cost	Higher V_{OS} and Gain Error
INA190	More Accurate	N/A

Table 2. Related TI Application Briefs

SBOA162	Measuring Current To Detect Out-of-Range Conditions
SBOA165	Precision Current Measurement On High Voltage Power Rail
SBOA160	High Precision, Low-Drift In-Line Motor Current Measurements
SBOA161	Low-Drift, Low-Side Current Measurements for Three-Phase Systems

DELL/HP/LENOVO EXHIBIT 1015
Page 7

Copyright © 2021 Texas Instruments Incorporated

Application Brief

Integrated, Current Sensing Analog-to-Digital Converter

Scott Hill *Current Sensing Products*

The signal chain path for measuring current is typically consistent from system to system. Whether current is measured in a computer, automobile or motor, the common functional blocks used are found in nearly all equipment.

The interface to a real world element such as light, temperature or current in this case, requires a sensor to convert the signal to a proportional value (voltage or current) that can be more easily measured. There are a several sensors that use magnetic field sensing for detecting the effects of current flow. These can be very effective for detecting very large currents or when isolated measurements are required. The most common sensor for measuring current is a current sensing, or shunt, resistor. Placing this component in series with the current being measured develops a proportional differential voltage as the current passes through the resistor.

The remaining blocks in the signal path are selected based on how this measured current information is to be used by the system. There are several blocks that are common and found in most applications as shown in Figure 1. These blocks consist of an analog front end (AFE) to amplify a small signal from the sensor, an analog-to-digital converter (ADC) to digitize the amplified signal from the sensor, and a processor to allow for the sensor information to be analyzed so the system can respond accordingly to the measured current level.

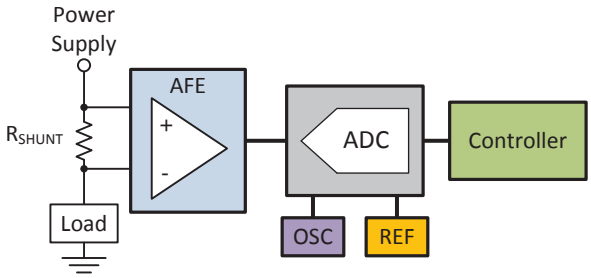

Figure 1. Current Sensing Signal Chain

One requirement for the AFE is allow for direct interface to the differential signal developed across the sense resistor. A single-ended output for the AFE simplifies the interface to the following ADC. Operational amplifiers in differential amplifier configurations are common for this functional requirement. Dedicated current sense amplifiers, INA210 for example, feature integrated gain setting components and are designed specifically for this type of application. The INA210 has the capability to accurately measure very small signals reducing the power dissipation requirement of the sensing resistor.

The next signal chain block is the ADC which is present to digitize the amplified sensor signal. This device can require additional external components (reference, oscillator) for more precise measurement capability. Similarly to the AFE, there are various options available for the ADC block. Stand-alone converters with the onboard references and oscillators are available as well as processors featuring onboard ADC channels.

Both integrated and discrete ADC blocks have their benefits as well as limitations. Fewer components on the board is one obvious advantage with the ADC being integrated into the processor. Existing instruction sets for the onboard ADC channels further reduces the requirement for additional software to be written to support a stand-alone ADC. However, silicon process nodes for digital controllers frequently are less optimized for precision analog, limiting the performance capability of the onboard converter. Discrete analog-to-digital converters have an advantage of allowing device selection based on optimized performance attributes such as resolution, noise or conversion speed.

A variation in this signal chain is to use an ADC to measure directly across the current sensing resistor eliminating the current sense amplifier entirely. A standard converter would have challenges in replacing the AFE and measuring the shunt voltage directly. One challenge is the large full-scale range of the ADC. Without the amplification of the sense resistor's voltage drop, either the full-range of the ADC cannot be fully utilized or a larger voltage drop will be needed across the resistor. A large voltage drop will result in a larger power dissipation across the sensing resistor. There are ADCs available with modified input ranges designed for measuring smaller signals directly which can allow for direct measurement of shunt voltages.

DELL/HP/LENOVO EXHIBIT 1015
Page 8

Copyright © 2021 Texas Instruments Incorporated

An internal programmable gain amplifier (PGA) is typically integrated in these devices to leverage the full-scale range of the ADC.

A limitation these small signal converters have is their limited common-mode input voltage range. These ADCs have input voltage ranges that are limited by their supply voltage which typically range from 3 V to 5.5 V based on the core processor voltage being supported. The INA226, shown in Figure 2, is a current sensing specific analog-to-digital converter that solves this common-mode limitation. This device features a 16-bit delta-sigma core and can monitor small differential shunt voltages on common-mode voltage rails as high as 36 V while being powered off a supply voltage that can range from 2.7 V to 5.5 V.

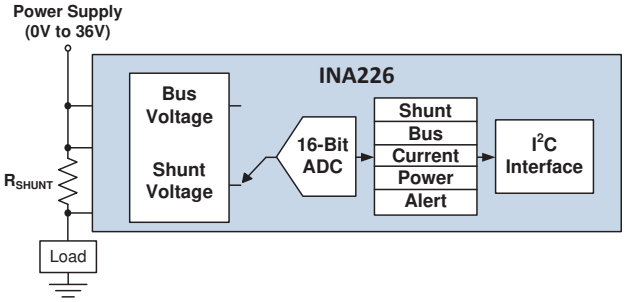

Figure 2. INA226, Precision Current, Voltage, Power Sensing ADC

Similar to the ADCs with modified small input range capability, the INA226 has a full-scale input range of about 80 mV enabling the device to measure directly across the current sensing resistor. The INA226 has the ability to very accurately resolve small current variations with an LSB step size of 2.5 µV and a maximum input offset voltage of 10 µV. A 0.1-µV/°C offset drift ensures the measurement accuracy remains high with only an additional 12.5 µV of offset induced at temperatures as high as 125°C. A 0.1% maximum gain error also enables the measurement accuracy to remain high at the full-scale signal levels as well.

While the INA226 is able to accurately measure small shunt voltages this component has been designed with additional functionality useful for current sensing applications. This device features an internal register that is user-programmable with the specific value of the current sensing resistor that is present on the PCB. Having the value of the current sensing resistor allows the INA226 to directly convert the shunt voltage measured every conversion to the corresponding current value and stores this to an additional output register. The INA226 also features an internal multiplexer allowing the device to switch from a differential input measurement to a single ended voltage configuration to allow for measurement of the common-mode voltage directly. The voltage measurement, along with the previously measured shunt voltage and corresponding current calculation, allows the device the capability of computing power. The device stores this power calculation and provides this value along with the shunt voltage, current and common-mode voltage information to the processor over the two-wire serial bus.

In addition to the on-chip calculations of current and power, the INA226 features a programmable alert register that allows the device to compare each conversion value to a defined limit to determine if an out-of-range condition has occurred. This alert monitor can be configured to measure out-of-range conditions such as overcurrent, overvoltage, or overpower. The device also includes programmable signal averaging to further improve measurement accuracy.

The INA226 is optimized to support precision current measurements. The additional features included in this device provide the capability of supporting the signal management and monitoring needed in this current measurement function reducing the burden on the system processor.

DELL/HP/LENOVO EXHIBIT 1015
Page 9

Copyright © 2021 Texas Instruments Incorporated

Alternate Device Recommendations

For applications with lower performance requirements, using the INA234 still leverages the benefits of the dedicated current sensing analog-to-digital converter. For additional precision measurement capability where currents being measured are less than 15 A, the INA260 provides similar functionality to the INA226 while also featuring a precision 2-mΩ integrated current sensing resistor inside the package. For applications requiring significantly higher common-mode voltage capability, the AMC1305 provides onboard isolation and is capable of supporting working voltages as high as 1.5 kV DC and handling peak transients as high as 7 kV. For applications with lower performance requirements for the AFE, use the INA210 to take advantage of the benefits of a dedicated current sense amplifier.

Table 1. Alternative Device Recommendations

Device	Optimized Parameters	Performance Trade-Off
INA234	Lower Cost	Higher V_{OS} & Gain Error, Lower V_{CM} Range
INA260	Lower System Level Gain Error & Offset	Larger Package: TSSOP-16
AMC1305	Isolated Measurement, Higher Signal Bandwidth	Higher Cost, Higher V_{OS} & Gain Error
INA210	Lower Cost	Higher V_{OS} & Gain Error

Table 2. Adjacent Tech Notes

SBOA162	Measuring Current To Detect Out-of-Range Conditions
SBOA165	Precision Current Measurement On High Voltage Power Rail
SBOA167	Integrating The Current Sensing Signal Path
SBOA170	Integrating the Current Sensing Resistor

DELL/HP/LENOVO EXHIBIT 1015
Page 10

Copyright © 2021 Texas Instruments Incorporated

Application Brief

Integrating the Current Sensing Resistor

Scott Hill, Current Sensing Products

Current is one of the most common signals used for evaluating and diagnosing the operational effectiveness of an electronic system. However, measuring this signal directly is very challenging. Instead, many types of sensors are used to measure the proportional effects that occur due to current flowing throughout the system.

The most common sensing element used for detecting current flowing in a system is a resistor. Placing a resistor, called a shunt, in series with the current path develops a differential voltage across the resistor as current passes through it.

One common signal chain configuration for monitoring a current signal involves an analog front-end (AFE), an analog to digital converter (ADC), and a system controller as shown in Figure 1. An AFE, such as an operational amplifier or dedicated current sense amplifier, converts the small differential voltage developed across the shunt resistor to a larger output voltage that the ADC can digitize before sending the information to a controller. The system controller uses the current information to optimize the system's operational performance or reduce functionality in the event of an out-of-range condition to prevent potential damaging conditions from occurring.

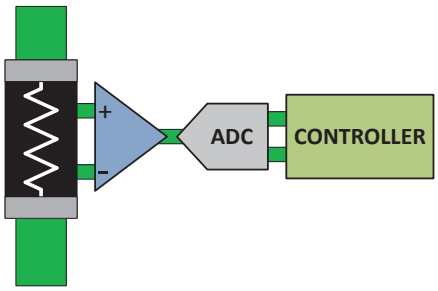

Figure 1. Current Sensing Signal Chain

The proper resistance value selection is critical in optimizing the signal chain path. The resistance value and corresponding voltage developed across the shunt results in a system power loss. To limit the power loss, it is preferred to minimize the shunt resistance. The resistor value is directly proportional to the signal developed and sent to the current sensing amplifier.

Amplifiers have fixed inherent errors associated with them, input offset voltage for example, that impact the measurement accuracy. As the input signal increases, the influence of these internal errors on the total measurement accuracy decreases. When the input signal decreases the corresponding measurement error is a higher . This relationship between the signal level and the acceptable measurement accuracy provides general lower limits for the current sensing resistor selection. The upper limit value for the current sensing resistor should be limited based on an application's acceptable power loss for this component.

One benefit of using resistors for current measurement is the availability of accurate components that provide both high precision and temperature stable measurements. Precision current sensing amplifiers are available featuring measurement capabilities optimized for interfacing with very small signals to accommodate small value resistors and low power losses.

There are two trends for resistors as the ohmic value decreases into the single digit milliohm level and below. One trend for this segment of resistors is the reduced package availability and resistor value combinations. The other trend is the increased cost for precision and low temperature coefficient components. Pairing a low ohmic, low temperature coefficient current sensing resistors with precision tolerance levels (~0.1%) result in solution costs in the several dollar range without including the cost associated with the precision amplifier.

A component such as the INA250, shown in Figure 2, helps reduce the challenges of selecting these increased accuracy, higher cost resistors for applications needing precise and temperature stable measurements. This device pairs a precision, zero-drift, voltage output current sense amplifier with a 2mΩ integrated current sensing resistor with a 0.1% maximum tolerance and a temperature drift of 15ppm/°C over the device's entire temperature range of -40°C to +125°C. This device can accommodate continuous currents flowing through the on-board resistor of up to 15A.

DELL/HP/LENOVO EXHIBIT 1015
Page 11

Copyright © 2022 Texas Instruments Incorporated

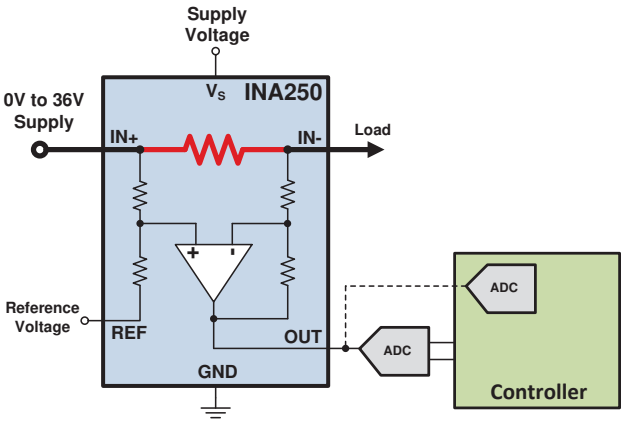

Figure 2. Integrating The Current Sensing Resistor

In addition to the integrated precision resistor inside this device, the INA250 also addresses one of the most common issues associated with implementing a current sensing solution. A low-ohmic shunt resistor is used to reduce the current sensing power dissipation. A challenge in accommodating this low resistance value is the potential impact of parasitic resistance on the PCB. Parasitic resistance in series with the shunt resistor can cause additional measurement errors as current flows through the resistance to create the shunt voltage. The most common source for these measurement errors is poor layout techniques. A Kelvin connection, also known as a four terminal connection or a force-sense, is required to ensure that minimal additional resistance is present to alter the differential voltage developed between the amplifier's input pins. There are PCB layout techniques to reduce the effect of parasitic resistance, however, this concern is removed with the INA250.

For applications that require measuring current in a high dv/dt common mode transients like motor control and solenoid control, the INA253 is specifically design to reject PWM signals with a settling time of <10µs.

As previously described, the typical current sensing signal chain path includes the current sensing resistor, the analog front-end, ADC and system controller. The INA250 combines the shunt resistor and the current sensing amplifier. The INA260 combines the current sensing resistor, measurement front-end and the ADC into one single device.

Figure 3 shows the INA260 featuring the same precision, integrated sensing resistor, pairing it with a 16-bit, precision ADC optimized for current sensing applications. This combination provides an even higher performance measurement capability than the INA250 resulting in a maximum measurement gain error of 0.5% over the entire temperature range and a maximum input offset current of 5mA.

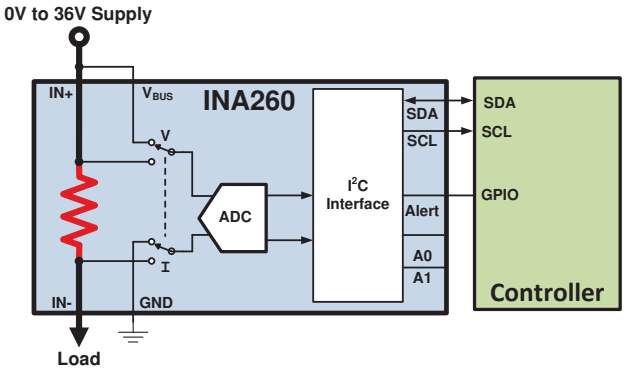

Figure 3. Integrated Signal Path

Pairing the precision, low-drift current sensing with these precision current sensing devices provides measurement solutions that are challenging to accomplish using discrete amplifier and resistor combinations. There are few catalog current sensing resistors available that are capable of enabling the combination of precision and temperature stable measurements but achieving this level of accuracy in a solution size comparable to TSSOP-16 packaged integrated solutions doesn't exist.

Alternate Device Recommendations

For additional design flexibility, many stand-alone current sensing amplifiers and digital power monitors are also available. For lower performance applications with higher current requirements than the integrated solutions support, use the INA210 stand-alone current sensing amplifier. For applications requiring a stand-alone digital power monitor, use the INA226. For applications implementing over-current detection, the INA301 features an integrated comparator for on-chip over-current detection as fast as 1µs.

Table 1. Alternative Device Recommendations

Device	Optimized Parameter	Performance Trade-Off
INA210	35µV V_{OS}, Package: SC70-6, QFN-10	No on-boad current sensing resistor
INA226	10µV V_{OS}, Package: MSOP-10	No on-boad current sensing resistor
INA301	Signal Bandwidth, On-Board Comparator	No on-boad current sensing resistor

Related Documentation

1. *Integrated-Resistor Current Sensors Simplify PCB Design*
2. *Precision Current Measurements on High-Voltage Power Supply Rails*
3. *Integrating the Current Sensing Signal Path*
4. *Precision, Low-Side Current Measurement*

DELL/HP/LENOVO EXHIBIT 1015
Page 12

Copyright © 2022 Texas Instruments Incorporated

Application Brief

Common Uses for Multi-Channel Current Monitoring

Dennis Hudgins, Current Sensing Products

As the need for system intelligence and power efficiency continues to grow, the need for better monitoring of critical system currents is increasingly paramount. In the past this may have been done with multiple operational amplifiers configured as difference amplifiers or multiple current sense amplifiers distributed within the system. As the number of current monitor channels increases so does the amount of external components needed to realize a solution. The added components increase the design complexity and solution size, and can degrade the overall current sensing accuracy.

For example, consider the case where two currents need to be measured as shown in Figure 1.

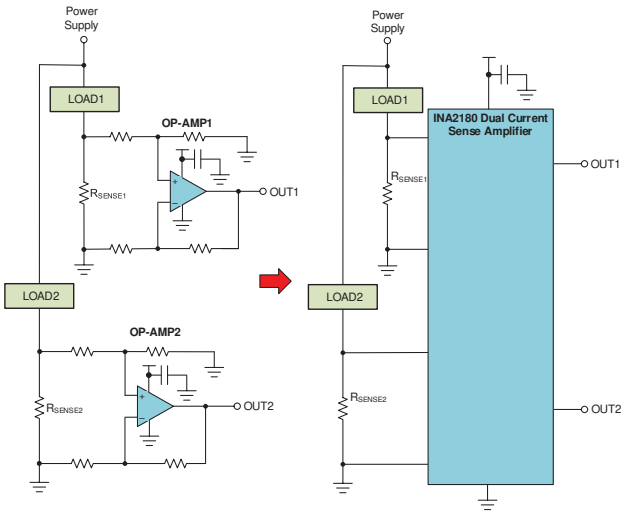

Figure 1. Discrete vs. Integrated Current Sensing Solutions

In this case, the operational amplifier-based solution requires 8 resistors to set the gain, 2 bypass capacitors and 2 current sense resistors. The same circuit implemented with an INA2180 only requires the 2 current sense resistors and a single bypass capacitor. Since the integrated gain-set resistors are well matched, the accuracy of the INA2180 solution is much better than what can be achieved in a cost effective discrete implementation. The integrated gain-set resistors permit higher accuracy monitoring or allow use of a cheaper wider tolerance current sense resistor. The INA2180, INA2181, and INA2290 devices are also more flexible in that they can monitor voltage drops across resistors that have voltages greater than the supply voltage.

In addition to simplifying the design process and reducing the number of external components, having multiple current monitoring devices in a single package facilities several common application solutions.

For example, consider the application shown in Figure 2, where the total current drawn by the memory and processor is monitored by an external ADC.

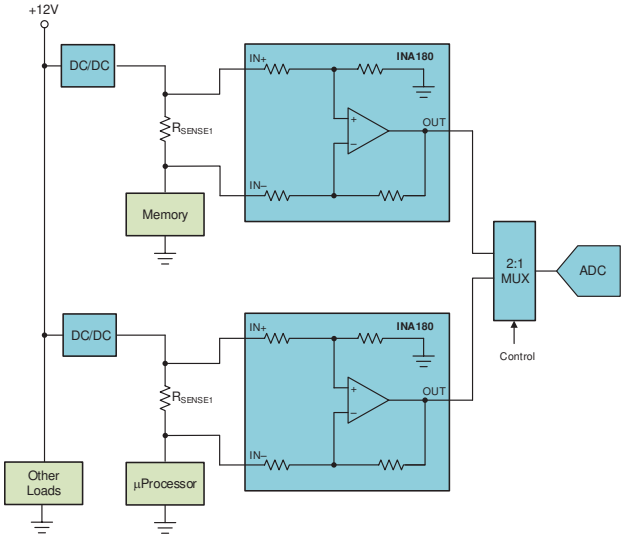

Figure 2. Monitoring Total Current in Two Supply Rails

One approach would be to monitor both the CPU and memory current, multiplex the current to an ADC and then and add the resulting values together in a microprocessor. This approach requires some mathematical processing as well as an ADC to continually sample outputs at a fast enough rate to be effective. A better approach would be to use the REF pin of the INA2181 to add the current drawn by the memory to the current drawn by the CPU. This can be done by connecting the output of channel 1 that monitors the memory current to the REF2 pin as shown in Figure 3.

DELL/HP/LENOVO EXHIBIT 1015
Page 13

Copyright © 2021 Texas Instruments Incorporated

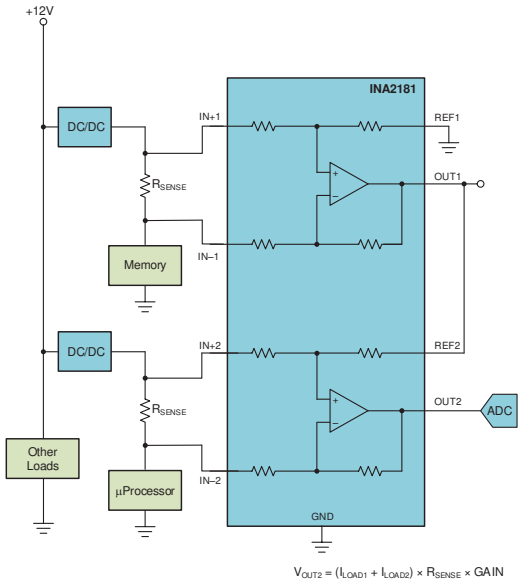

Figure 3. Analog Current Summing With INA2181

The channel 2 output will be the amplified sum of the currents from the CPU and memory. The current from the memory and the current from the total can be monitored when desired by an ADC. However, since the channel 2 output is an analog signal, a comparator with an appropriately set reference can be used to interrupt the system when an over current condition occurs. For this circuit to function properly the values of the two sense resistors must be the same.

Another convenient use for multi-channel current monitors is to detect unexpected leakage paths. These leakage paths could be caused by unintended shorts to ground or some other potential not in the current measurement path. One technique to detect leakage current paths is to monitor all current going into and coming out of a circuit. As long as there are no unexpected leakage paths, the current into the load must equal the current coming out. To detect leakage currents all current in and out of a circuit should be monitored. If the currents in and out are equal, no unexpected current leakage path will be detected. Use of the dual current monitor provides a simple technique to detect leakage current paths without the need for multiple devices or the need to externally add or subtract currents. The circuit shown in Figure 4, uses the INA2181 to monitor the current into and out of a load.

By reversing the polarity of the resistor connections of the second amplifier and connecting the output of the first amplifier to the second amplifier, the current going in to the load is subtracted from the current going out.

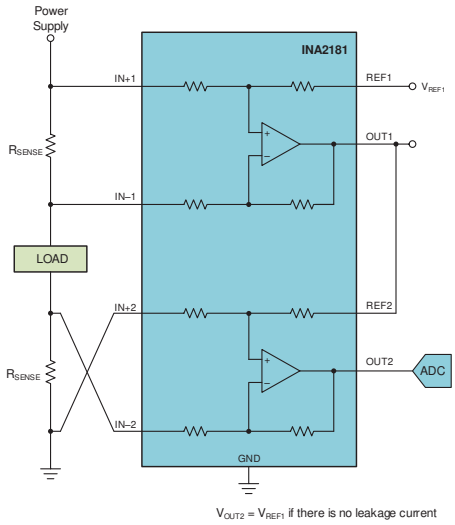

Figure 4. Current Subtraction Using the INA2181, for Leakage Current Detection

If the voltage at OUT2 is equal to the applied reference voltage then no leakage path exists. If V_{OUT2} is higher than the applied reference voltage then there is unexpected current leaving the load. Likewise if V_{OUT2} is below the reference voltage then unexpected leakage current is entering the load. As before, for this circuit to function properly the values of the current sense resistors must be the same.

Texas Instruments offers several solutions for multichannel current monitoring. To monitor 4 channels the INA4180, INA4181, and INA4290 devices are available with an analog voltage output. The INA3221 provides the ability to accurately measure both system current and bus voltages for up to 3 independent channels. The values of the currents and voltages are reported through an I^2C interface.

Table 1. Alternative Device Recommendations

DEVICE	OPTIMIZED PARAMETERS	PERFORMANCE TRADE-OFF
INA4180	4-channel analog current monitor	Unidirectional Measurement
INA4181	Bidirectional 4-channel current monitor	Larger package
INA3221	3-channel digital current/ voltage monitor	No analog output
INA2290	2-channel, 120-V analog current monitor	Unidirectional Measurement
INA4290	4-channel, 120-V analog current monitor	Unidirectional Measurement

Table 2. Adjacent Tech Notes

LITNUMBER	TITLE
SBOA162	Measuring Current To Detect Out-of-Range Conditions
SBOA169	Precision, Low-Side Current Measurement
SBOA190	Low-Side Current Sense Circuit Integration

DELL/HP/LENOVO EXHIBIT 1015
Page 14

Copyright © 2021 Texas Instruments Incorporated

Application Brief

Measuring Current To Detect Out-of-Range Conditions

Scott Hill, Current Sensing Products

The amount of current flowing throughout a system provides insight in determining how effectively the system is operating. A basic insight into the system's operation is a comparison between the current being pulled from a power supply and a pre-defined target range for that particular operating condition. Current levels exceeding the expected current level indicate that an element in the system is consuming more power than expected. Likewise, if the current is lower than expected it may indicate some part of the system is not powered correctly or possibly disconnected.

There are multiple methods available to diagnose fault conditions in a system depending on how the out-of-range indication is intended to be used. One method is to monitor an entire system's current consumption to identify potentially damaging excursions for the power supply. In this case, measurement accuracy is typically not critical and requires a simple alert to indicate an out-of-range condition.

Fuses are commonly used for short-circuit protection preventing damaging levels of current from flowing in the system. In an out-of-range event the fuse will blow and break the circuit path. The fuse must be replaced for the system to operate correctly again. In worst case situations the system requires delivery to a repair facility if the fuse is not easily accessible.

There is a time-current dependency that limits the effectiveness of a fuse in responding to a specific current threshold. An example time-current response of a fuse is shown in Figure 1.

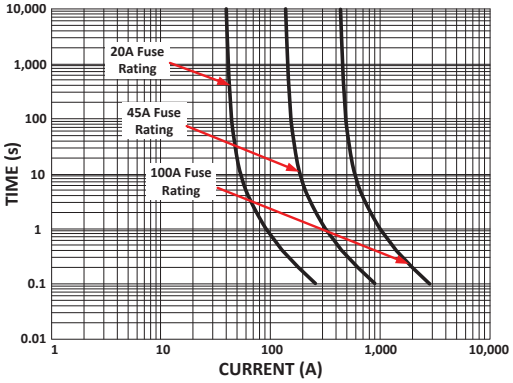

Figure 1. Typical Time-Current Fuse Curve

Another overcurrent protection scheme becoming more common is to allow the system to protect itself when an excursion is detected but then enable the system to return to normal operation once the fault condition has been cleared. This protection method uses a comparator comparing the monitored operating current levels to defined thresholds, looking for out-of-range conditions. Creating the necessary level of detection for a particular application relies on system specific variables such as the adjustability of the desired over-range threshold, the amount of margin acceptable in the threshold level and how quickly the excursion must be detected.

The INA300 is a specialized current sensing comparator with the ability to perform the basic comparison to expected operating thresholds required for out-of-range detection.

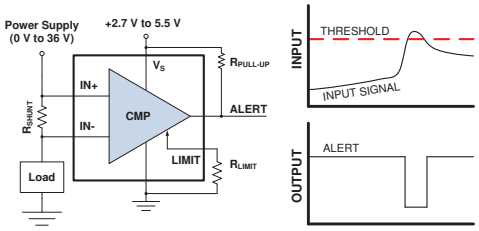

Figure 2. INA300 Over-Current Comparator

Figure 2 shows the INA300 measuring the differential voltage developed across a current sensing resistor and the comparison to a user-adjustable threshold level. The alert output is pulled low when the threshold level is exceeded. The INA300's alert response is issued following a current excursion in as short as 10µs.

There may also be a need to provide information on how much current is actually being pulled by the supply or a particular load in addition to the fault indication. For these requirements a typical approach is to utilize a combination of a current sense amplifier and a stand-alone comparator as shown in Figure 3.

DELL/HP/LENOVO EXHIBIT 1015
Page 15

Copyright © 2022 Texas Instruments Incorporated

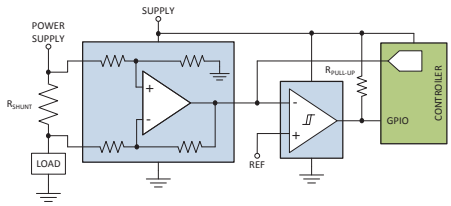

Figure 3. Discrete Over-Current Detection

The current sense amplifier measures the differential voltage developed across the sense resistor and sends the output to both the comparator input and analog to digital converter (ADC).

The INA301 and INA381 combines both the current sense amplifier (providing a voltage output signal proportional to the measured input current) and an on-board comparator (for over-current detection) into one device as shown in Figure 4.

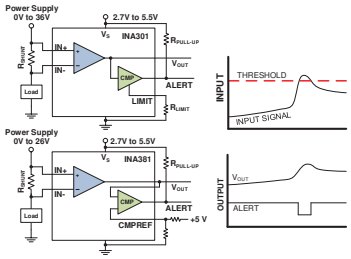

Figure 4. Integrated Over-Current Detection with INA301 and INA381

With both the current information and an out-of-range indicator the system may utilize multiple monitoring and protection schemes based on the operating conditions. One scheme used with this device is to initially monitor only the alert indicator as a fault indicator. Once an out-of-range condition is detected and the alert pin is asserted, the system then begins actively monitoring the analog output voltage signal allowing the system to respond accordingly. The system response typically will be to reduce system performance level, shut down entirely or to continue monitoring to determine if the excursion continues to become a more significant system concern. Having both the proportional output voltage as well as the on-board over-current detection function allows the system to only actively monitor the current information when necessary optimizing system resources. The INA381 is similar in function to the INA301 except both inputs to the over-current comparator are directly accessible for greater flexibility when setting the over current trip threshold.

The INA301 provides a combination of performance capability in addition to the integration of both the current sensing amplifier as well as on-board comparator. The INA301 amplifier's has a small signal bandwidth of 450 kHz at a fixed gain of 100 (gains of 20 and 50 are also available) and a maximum input offset voltage of 35 µV. In addition to the maximum gain error specification of 0.2%, the amplifier's ability to detect the out-of-range condition is fast. The INA301 is able to achieve accurate input measurements and quickly respond to over-current events with a response time including the input signal measurement, comparison to the user-selected alert threshold, and assertion of the comparators output in less than 1µs.

Alternate Device Recommendations

For applications needing to monitor current on voltage rails that are higher than the INA301's range of 36V with the on-board over-current detection, use the INA200. The INA180 is a current sense amplifier that is commonly used in the discrete over-current detection circuit using an external comparator. The INA381 provides a cost effective solution for over current detection in applications that feature a common mode range less than 26 V. For applications requiring monitoring of a second fault threshold level, the INA302 features an additional out-of-range comparator with dedicated adjustable threshold level.

Table 1. Alternate Device Recommendations

Device	Optimized Parameter	Performance Trade-off
INA180	Package: SC70-5, SOT23-5	Reduced bandwidth, analog output only
INA381	Cost, Flexibility	Reduced bandwidth, Common mode voltage
INA200	Common-mode Voltage Range: -16 V to +80 V	Reduced accuracy
INA302	Two Independent Alert Comparators	Larger Package: TSSOP-14

Related Documentation

1. *Low-Drift, Low-Side Current Measurements for Three Phase Systems*
2. *High-Side Motor Current Monitoring for Over-Current Protection*
3. *Integrating The Current Sensing Signal Path*
4. *Monitoring Current for Multiple Out-of-Range Conditions*
5. *Safety and Protection for Discrete Digital Outputs in a PLC System Using Current Sense Amplifiers*

DELL/HP/LENOVO EXHIBIT 1015
Page 16

Copyright © 2022 Texas Instruments Incorporated

Design Guide: INA300 INA301 INA302 INA303

Monitoring Current for Multiple Out-of-Range Conditions

Dennis Hudgins, Current Sensing Products

One of the first parameters engineers look at when determining proper operation of a PCB design is the operating current. By examining the operating current, an engineer can immediately tell if something on the board is shorted, whether any of the devices are damaged, and in some cases detect if the software is running as expected. The traditional approach of using a current sense amplifier + ADC to monitor current for out-of-range conditions does not provide the required alert response time. Also, use of an ADC to monitor over current alert thresholds requires constant communication between the ADC and host processor which can unnecessarily burden the system.

Being able to quickly know when a current level is out of range allows improved safely, improved system intelligence/diagnostics and reduced downtime.

To address the response time required for out-of-range current conditions, analog comparators are needed to detect when the current exceeds a given reference threshold. However, in many cases having only one alert level is insufficient to determine the system status and provide appropriate system responses to out-of-range currents. To handle this requirement the circuit shown in Figure 1-1 can be used to monitor multiple out-of-range current conditions.

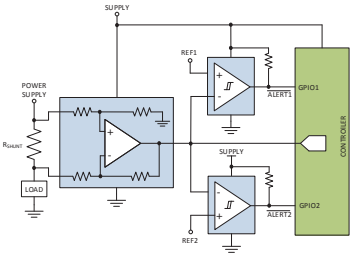

Figure 1-1. Discrete Implementation to Detect Multiple Over-current Events

This circuit is composed of 5 devices: a current sense amplifier, two comparators, and two references. The discrete implementation, shown in Figure 1-1 requires careful selection of the comparators to get the desired alert response time. Slow response times may not allow enough time for the system to take action; while too fast of a response time can trigger false alerts, possibly resulting in system shutdown.

Figure 1-2 shows a simpler circuit that addresses the design issues present in the discrete implementation.

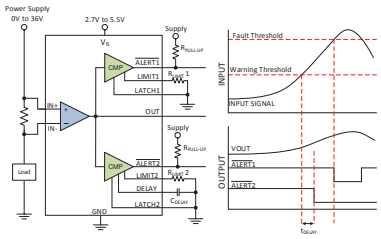

Figure 1-2. INA302 **Multi-Alert Over-Current Comparator**

The INA302 incorporates the ability to detect two out-of-range conditions. The lower out-of-range condition is referred to as the over current warning threshold, while the higher out-of-range condition is referred to as the over current fault threshold. The over current warning threshold allows detection when the current is starting to get too high but has not yet reached the fault threshold where system shutdown may be initiated. When the current exceeds the warning threshold, the system may opt to reduce the system power consumption by disabling sub-circuits, controlling supply voltages, or reducing clocking frequencies to lower the total system current to prevent a fault condition. If an over-current fault condition does occur, it is important to respond quickly to prevent further system damage or malfunctioning behavior.

To minimize the component count and facilitate ease of use, the alert thresholds of the INA302 are set with single external resistors. The fault threshold should be set higher than the worst case current the system could be expected to consume. When the current exceeds this threshold, the alert pin of the INA302 will respond within 1 µs. The value for the warning threshold is application dependent, but is usually higher than the nominal operating current. The response time of the warning threshold is adjustable with an external capacitor from 3 µs to 10 s.

By setting the warning threshold delay time appropriately, it is possible to set the over current

DELL/HP/LENOVO EXHIBIT 1015
Page 17

Copyright © 2021 Texas Instruments Incorporated

warning threshold closer to the maximum DC operating current while still avoiding false trips due to brief current spikes or noise. Wider separation between the fault and warning thresholds provides the system additional time for preventative action before the fault threshold is exceeded.

Some systems allow operation above the warning threshold for a period of time before triggering an alert. One such application is monitoring the supply current to a processor. The processor may be allowed to operate above the normal maximum current level for a brief period of time to maximize computing throughput during critical operations. If the current is above the warning threshold when the set delay expires the alert output will pull low to notify the host processor so the voltage or clocking frequency can be decreased before overheating occurs.

In some systems it is beneficial to detect when the current is too low. For these applications, the INA303, shown in Figure 1-3 provides both over and under current detection.

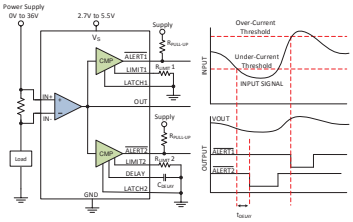

Figure 1-3. INA303 **Over and Under Current Detection**

When the current exceeds the over current fault threshold, the $\overline{\text{ALERT1}}$ output will respond within 1 µs. However, if the current goes below the under current threshold, the $\overline{\text{ALERT2}}$ response time is set by the delay capacitor. Undercurrent situations may briefly occur in normal operation; however, if this condition persists, it could be due to a damaged device or system that is about to fail.

In this case, the alert output can notify the system of this condition and fault handling procedures can be implemented before system failure.

Another use of under-current detection is to provide confirmation of proper system status. Some systems go into low power modes where the current is below the normal operating range. In this case, the under-current alert output can be used to notify the host that the system has indeed entered the shutdown state.

Some designs may only care to get notified if the current is outside of expected operating bounds. For these cases, the INA303 can be configured to run in window mode by connecting the two alert outputs together as shown in Figure 1-4. In this mode, the single alert output will be high as long as the current is with-in the normal operating window.

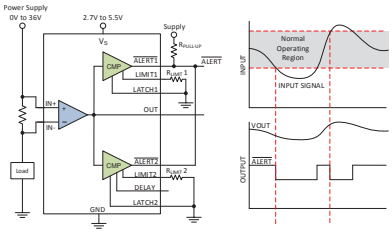

Figure 1-4. INA303 **Window mode Operation**

Alternate Device Recommendations

The INA226 can be used in applications that require digital current monitoring. If only a single digital alert output is needed, the INA300 provides an optimal solution in a tiny 2mm x 2mm QFN package. For applications that only require a single alert output in additional to the analog current signal, the INA301 provides excellent current monitoring accuracy with an alert response less than 1 µs. For cost sensitive applications and added flexibility, the INA381 provides an current sense amplifier with an internal comparator with accessible inputs.

Table 1-1. Alternate Device Recommendations

Device	Optimized Parameter	Performance Trade-off
INA301	MSOP-8 package, single alert with analog monitor.	Single alert
INA300	2mm x 2mm QFN package	Alert only
INA381	Cost effective, accessible comparator inputs	Single alert
INA226	Digital current monitor	N/A

Table 1-2. Related TI Application Briefs

SBOA162	**Measuring Current To Detect Out-of-Range Conditions**
SBOA163	High-Side Motor Current Monitoring for Over-Current Protection
SBOA167	Integrating The Current Sensing Signal Path
SBOA193	Safety and Protection for Discrete Digital Outputs in a PLC System

DELL/HP/LENOVO EXHIBIT 1015
Page 18

Copyright © 2021 Texas Instruments Incorporated

Application Brief

High-Side Motor Current Monitoring for Overcurrent Protection

Scott Hill, Mubina Toa, Current Sensing Products

High power, precision motor systems commonly require detailed feedback such as speed, torque and position to be sent back to the motor control circuitry to precisely and efficiently control the motor's operation. Other motor control applications, such as fixed motion tasks, do not require the same level of system complexity to carry out their jobs. Information alerts that the motor had stalled, an unintended object was found in the motor's path, or that a short was detected in the motor's winding can be sent back to the motor control circuitry. More complex motor control systems implementing dynamic control and active monitoring can also benefit from adding simple out-of-range detection function because of the faster indication of out-of-range events.

By placing a current sense amplifier in series with the DC power supply driving the high side of the motor drive circuitry as shown in Figure 1, the overall current to the motor can be measured easily detecting out-of-range conditions. To detect small leakages the low-side return current can also be measured. A difference between the high-side and low-side current levels indicates a leakage path exists within the motor or motor control circuitry.

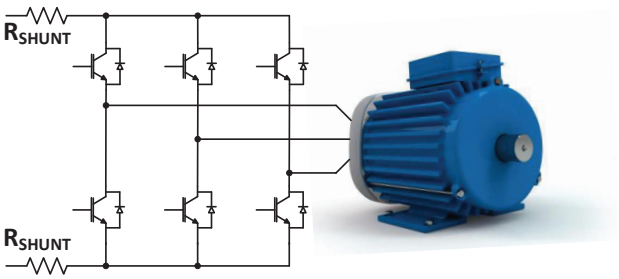

Figure 1. Low & High-Side Current Sensing

The DC voltage level varies depending on the voltage rating of the motor leading to multiple current measurement solutions to accommodate the corresponding voltage levels. For low-voltage motors (approximately 5-V), the selection of circuitry to monitor this current is much simpler with multiple amplifier types (current sense, operational, difference, instrumentation) and can perform the current measurement function to support this common-mode input voltage range.

For larger voltage motors (24-V and 48-V, for example), the available options reduces to dedicated current sense and differential amplifiers. As the voltage requirements continue to increase, measurement errors begin to impact the ability to effectively identify out-of-range conditions. One specification that describes an amplifier's effectiveness at operating at high input voltage levels is the common-mode rejection (CMR) term. This specification directly describes how well an amplifier's input circuitry can reject the influence of large input voltages.

Ideally, an amplifier is able to completely reject and cancel out any voltage common to both input pins and amplify only the differential voltage seen between them. However, as the common-mode voltage is increased, leakage currents in the amplifier's input stage result in additional input offset voltage. Larger input range levels being monitored will create proportionally larger measurement errors.

For example, an amplifier (difference amplifier or current sense amplifier) that has a CMR (Common-Mode Rejection) specification of 80 dB will have a significant offset voltage introduced in the measurement based on the input voltage level. An 80-dB CMR specification corresponds to an additional 100 µV of offset voltage induced into the measurement for every volt applied to the input.

Many devices are specified under defined conditions (V_{CM} = 12 V and V_S = 5 V, for example) which establishes the base-line for the default specifications (CMR and PSRR, specifically). In this example operating at 60-V common-mode voltage creates a change in V_{CM} of 48 V (60 V – 12 V). A 48-V change with a 80-db CMR results in an additional 4.8 mV of offset voltage in addition to the specified input offset voltage found in the device's data sheet.

Applications employing calibration schemes are less concerned by this additional induced offset voltage. However, for applications where system calibration

DELL/HP/LENOVO EXHIBIT 1015
Page 19

Copyright © 2021 Texas Instruments Incorporated

cannot account for this shift in offset, selection of an amplifier with better common-mode voltage rejection is required.

The INA240 is a dedicated current sense amplifier with a common-mode input voltage range of –4 V to +80 V and a worst-case CMR (Common-Mode Rejection) specification of 120 dB over the entire input and temperature range of the device. 120 dB of CMR corresponds to an additional 1 µV of input offset voltage induced for every 1-V change in common-mode voltage. The temperature influence on the amplifier's ability to rejection common-mode voltages is not well documented in many product data sheets so it should be evaluated in addition to the room temperature specification. The INA240 maintains a ensured 120-dB CMR specification over the entire –40°C to +125°C temperature range. The typical CMR performance for the INA240 over the entire temperature range is 135 dB (less than 0.2 µV for every 1-V change) as shown in Figure 2.

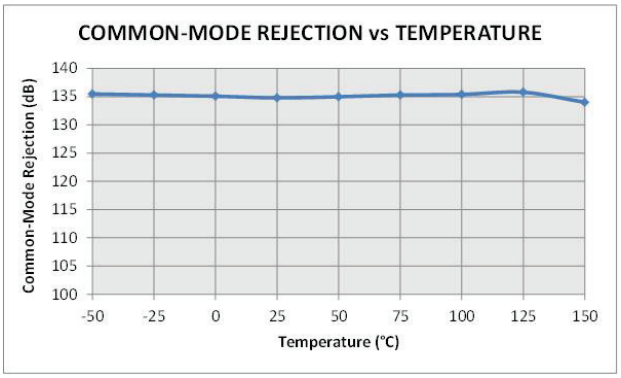

Figure 2. Common-Mode Rejection vs. Temperature

A system controller has the ability to use the current sense amplifier's measurement to evaluate the operation of the system. Comparing the current information to pre-defined operating threshold allows for detection of out-of-range events. A comparator following the high-side current sense amplifier can easily detect and provide alerts quickly to the system allowing for corrective actions to be taken.

Figure 3 illustrates the signal chain path for monitoring and detecting out-of-range excursions when measuring currents on a high-voltage rail driving the motor drive circuitry. The output signal proportional to the measured input current is directed to the ADC in addition to be sent to the comparator to detect overcurrent events. The comparator alert will assert if the input current level exceeds the predefined threshold connected as the comparators reference voltage.

A key requirement for overcurrent detection circuitry is the ability to detect and respond quickly to out-of-range conditions. A fast signal bandwidth device, such as the INA290, enables speedy response to a control unit to ensure other critical system components are not damaged by the unintended excess current flowing in the system. The INA290 is a 1.1-MHz part which can measure on the high-side between 2.7-V to 120-V common mode.

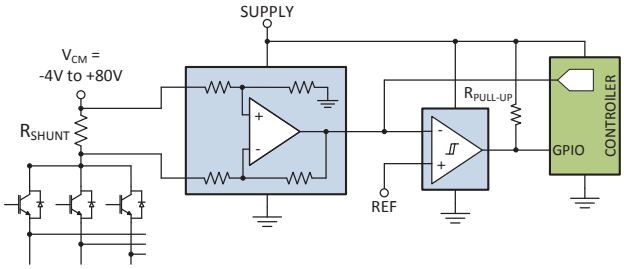

Figure 3. High-Side Overcurrent Detection

Alternate Device Recommendations

If a comparator is required, the INA301 is a good option as it is a precision current sense amplifier with an onboard comparator that is ideal for detecting overcurrent events on common-mode voltages up to 36 V. For applications requiring higher voltage capability, the INA149 is a high performance difference amplifier capable of interfacing with common-mode voltages up to ±275 V off of a ±15-V supply and has a ensured CMR of 90 dB (or 31.6 µV for every 1-V input change). If isolation or high voltage common-mode capability is required, the TMCS1100, hall-effect current sensor, has ±600 V of basic isolation.

Table 1. Alternate Device Recommendations

DEVICE	OPTIMIZED PARAMETER	PERFORMANCE TRADE-OFFS
INA290	Package: SC-70, Signal Bandwidth (1.1 MHz)	High-side only (2.7 Vcm to 120 Vcm)
INA149	V_{CM} Range: ±275 V	CMR, Gain
INA301	Onboard Comparator; 35 µV V_{OS}	V_{CM}: 0 V to 36 V
TMCS1100	±600-V basic isolation	Not as accurate as a shunt-based solution

Table 2. Related TI Application Briefs

LITERATURE NUMBER	TITLE
SBOA160	High Precision, Low-Drift In-Line Motor Current Measurements
SBOA161	Low-Drift, Low-Side Current Measurements for Three-Phase Systems
SBOA162	Measuring Current To Detect Out-of-Range Conditions
SBOA165	Precision Current Measurement On High Voltage Power Rail

DELL/HP/LENOVO EXHIBIT 1015
Page 20

Copyright © 2021 Texas Instruments Incorporated

Application Brief

Shunt-Based Current-Sensing Solutions for BMS Applications in HEVs and EVs

Guang Zhou and Dan Harmon

BMS Topologies and Current Measurement Methodologies

Hybrid electric vehicles (HEV) and electric vehicles (EV) continue to gain share in the overall global automotive market. The battery management system (BMS) for these vehicles carries out the important tasks of keeping the battery inside the safe operating area (SOA), monitoring power distribution, and tracking the state of charge (SoC). In a typical HEV and EV, both high- and low-voltage subsystems are present. The high-voltage subsystem operates at several hundred volts, and interfaces directly with utility grid or high-voltage DC sources. The low-voltage subsystem generally operates at 48 V and 12 V.

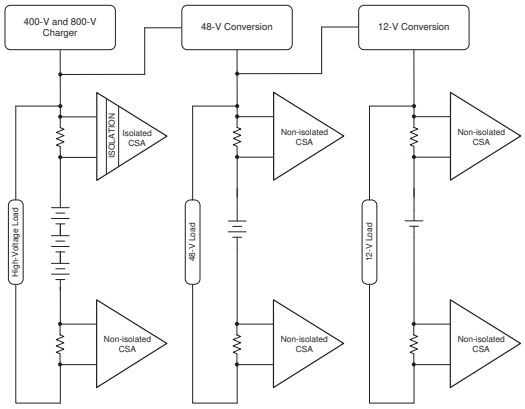

Figure 1. Topologies of Current Sensing in BMS

High-voltage battery, top-of-stack measurements require an isolated solution. Magnetic solutions enable the require isolation, but typically will not be able to support the full current range. TI offers isolated shunt-based current sensing solutions, such as the AMC3301-Q1. A summary of other examples of isolated current sensing technology can be found in the *Comparing Shunt- and Hall-Based Isolated Current-Sensing Solutions in HEV/EV* application brief. Isolation is not typically required for top-of-the-stack 48-V or 12-V battery systems nor in bottom-of-the-stack implementations.

The focus in this document is on non-isolated, shunt-based current-sensing amplifiers (CSA), also called current shunt monitors (CSM), and digital power monitors (DPM) for bottom-of-stack or top-of-stack in 12-V to 48-V BMS subsystems. The advantages of non-isolated shunt-based current sensing include simplicity, low cost, excellent linearity, and accuracy. A drawback of shunt-based current sensing is the power dissipation requirements for the shunt resistor at the maximum current levels.

Current Sense Amplifiers in an HEV or EV Charger

Battery array is an important component of any HEV or EV. There are mainly two types of rechargeable batteries: the lead acid battery that has been around for over 100 years, and the Li-Ion battery that has only been put into practical use since the 1980s. Both lead acid and Li-Ion batteries follow a certain constant voltage-constant current charging profile. The CSA plays an important role in making sure the battery remains within the SOA.

Operational current for the traction inverter and charging current can be greater than 1000 A in many systems. However, these BMS systems must also be able to measure currents equal to or less than 1 A when the vehicle is off as many systems continue to function such as keyless entry or vehicle-to-world communications. BMS systems must monitor the power distribution as accurately as possible during both operation and vehicle off-state to provide overall system health and safety information. State of charge (SoC), which is the equivalent of a fuel gauge for the battery pack in an HEV or EV, correlates to driving range. Current sensing is one of the important methods to determine SoC. In addition to the precision monitoring of the battery, most automotive BMS systems will require a redundant measurement with relaxed accuracy requirements to enable system level functional safety goals.

The extreme difference between the traction motor current (>1000 A) and the off-vehicle communications current (<1 A) creates a multi-decade, high-precision, bidirectional (charging versus vehicle operation) current measurement challenge.

DELL/HP/LENOVO EXHIBIT 1015
Page 21

Copyright © 2021 Texas Instruments Incorporated

Sizing the Shunt Resistor

Historically, measuring the high current with shunt-based topologies has been challenging. However, with the availability of ultra-low resistance shunts, the option is now viable. A typical analog current sense amplifier will have a fixed gain between 20 V/V and 200 V/V and operate from a 5-V supply. This 5-V supply determines the maximum output voltage (ignoring swing to supply limitations), and when we divide by the two gain extremes, we get a full-scale input voltage range of 250 mV to 25 mV. Assuming a bidirectional maximum current measurement of ±1000 A, we can calculate a maximum shunt value of 125 µΩ to 12.5 µΩ. As discussed in the TI Precision Labs - Current sense amplifiers videos, the amplifier offset will dominate the offset error at the low current range. If we use the ultra-precise INA240-Q1 with an offset of 25 µV, we get an error of 20% and 200% respectively on the two shunt resistors. Table 1 summarizes these calculations along with the power dissipation across these shunts at 1000 A.

Table 1. INA240-Q1 Shunt Resistor Value, Offset Error, and Power Dissipation Calculations for ±1000-A BMS Application

GAIN OPTION	INA240A1: 20 V/V	INA240A4: 200 V/V
Full scale input	250 mV	25 mV
Maximum shunt	125 µΩ	12.5 µΩ
Offset error at 1 A	20%	200%
P_{DIS} at 1000 A	125 W	12.5 W

Solving the Multi-Decade Challenge

This is where an ultra-precise, low-offset solution is required. TI's DPMs are specialized analog-to-digital converters (ADC) dedicated to measuring current. Most can also monitor bus voltage and can calculate the power as well. The full-scale input range is scaled down from that of a typical ADC to accommodate the typical small signal voltage drop across a shunt resistor. The INA229-Q1 (SPI Interface) and INA228-Q1 (I^2C interface) are 20-bit DPMs with V_{OFFSET} = 1 µV and a ±163.84-mV full-scale input range. Having a defined full-scale input range makes calculating the maximum shunt resistor value fairly straight forward, simply divide the full-scale input by the maximum current: 163.84 mV ÷ 1000 A = 163.84 µΩ. A more commonly available 100-µΩ shunt resistor is used to calculate a 1% error at 1 A.

The final error check is to verify that the integrated ADC is capable of resolving a signal level less than the offset error level. The INA228-Q1 and INA229-Q1 feature a 20-bit delta-sigma converter with one bit being the sign bit. Dividing the full-scale input of 163.84 mV by 19 bits of resolution results in 312.5 nV per least significant bit (LSB). This corresponds to 3.1 mA on a 100-µΩ shunt resistor, well below the target minimum current level of 1 A.

If even lower current levels are needed to be accurately measured, system calibration may become necessary. *Zero-drift* devices enable single-point calibration, and make such challenging designs possible by offering stable performance over temperature.

For current sensing in HEV and EV BMS subsystems, the INA229-Q1 or INA228-Q1 are excellent choices for any bottom-of-stack implementations or top-of-stack implementations in 48-V or 12-V systems with an 85-V common-mode specification and ultra-low offset of ±1 µV. The industry standard digital interface can further simplify the design by taking advantage of an existing communication bus. The INA240-Q1 with its 80-V common mode voltage range could be used in 48-V system top-of-stack measurements for either the redundancy implementation or in applications requiring less total dynamic range. All three devices are manufactured with TI proprietary *Zero-Drift* technology, which enable single temperature calibration, if needed, to address lower current accuracy.

Automotive Device Recommendations

In addition to the INA229-Q1 and INA228-Q1, TI offers other digital output current, voltage, and power monitors. Some example products and adjacent technical documents are compiled in Table 2 and Table 3.

Table 2. Alternative Device Recommendations

DEVICE	DIGITAL INTERFACE	DESCRIPTION
INA239-Q1	SPI	85-V, Bidirectional, *Zero-Drift,* 16-Bit, Low- or High-Side, SPI Current/Voltage/ Power Monitor
INA238-Q1	I^2C, SMBUS	85-V, Bidirectional, *Zero-Drift,* 16-Bit, Low- or High-Side, I^2C Current/Voltage/ Power Monitor
INA226-Q1	I^2C, SMBUS	36-V, Bidirectional, *Zero-Drift,* 16-Bit, Low- or High-Side, I^2C Current/Voltage/ Power Monitor

Table 3. Adjacent Tech Notes

LITERATURE NUMBER	LITERATURE TITLE
SBAA325	Current Sensing With INA226-Q1 in HEV/EV Low Voltage BMS Subsystems
SBOA170	Integrated, Current Sensing Analog-to-Digital Converter

DELL/HP/LENOVO EXHIBIT 1015
Page 22

Copyright © 2021 Texas Instruments Incorporated

Application Brief

12-V Battery Monitoring in an Automotive Module

Peter Iliya

Monitoring current off an automotive 12-V battery provides critical data for a variety of applications such as module current consumption, load diagnostics, and load feedback control. The TI current sensing portfolio can address this space with analog and digital current sense amplifier (CSA) devices that come automotive qualified, contain integrated features, and operate in 12-V environments even though powered with low-voltage rails. This document provides recommended devices and architectures to address current sensing in this space.

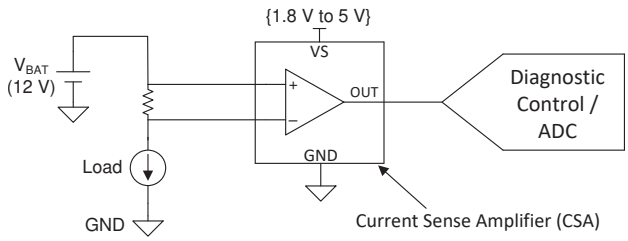

Figure 1. Current Sense Amplifier on 12-V Rail

There are constraints in this space that stem from conditions such as electrical transient protection regulations ISO7637-2 and ISO16750-2, jump-starts, reverse-polarity, and cold-cranking. In general, system-level protection and suppression schemes can be used to protect downstream circuitry from these voltage surge conditions. Types of devices included in these solutions are smart high-side switches, smart diodes, or other discrete implementations. These products may come with internal integrated current sensing features, but they often are not very accurate (±3% to ±20% maximum error) and have limited dynamic range.

Dedicated TI current sensors are low in power consumption and highly accurate (<1% error) in automotive environments even across temperature.

A matched internal gain network plus input offset zeroing provides lower measurement drift across temperature compared to either discrete solutions or ICs with supplemental integrated current sensing. This amplifier integration and technology can remove the need for temperature and system calibrations, all at low cost.

Usually, general system protection schemes do not fully suppress or protect against voltage surges, so these primary regulations translate into typical voltage survivability requirements. Depending on the system, a current sensor may need to survive load dumps, reverse battery protection, fast load-switching, and inductive kickback voltages. For example, working on a 12-V battery rail requires at least 40-V survivability during load dump conditions. It is important to choose a current sensor that has an input common-mode voltage (V_{CM}) rating that complies with the worst-case V_{CM} condition of the system. Otherwise, input voltage clamping schemes are needed to protect the device during such conditions.

There are multiple TI Current (Power) Sensing amplifiers that can operate on a 12-V automotive battery and survive crucial voltage levels up to 40 V and more. Ultimately, they provide very accurate, zero-drift, high bandwidth, and low-cost solutions. Using TI's Product selection tool online, Table 1 tabulates candidates for high-side current sensing on an automotive 12-V battery rail requiring 40-V survivability. It should be noted that all devices in Table 1 have multiple gain variants ranging from 20 V/V to 500 V/V.

Table 1. Current Sense Amplifiers for Monitoring 12-V Automotive Battery

TI Current Sense Amplifier	V_{CM} Survivability	V_{OS_MAX} (25 °C)	BW	Gain Error MAX (25 °C)	I_{Q_MAX} (25 °C)	Features
INA240-Q1	-6 V to +90 V	±25 µV	400 kHz	±0.2%	2.4 mA	PWM rejection (very high CMRR), AEC Q100 (temperature grades 1 and 0)
INA190-Q1	-0.3 V to +42 V	±10 µV	45 kHz	±0.3%	65 µA	More accurate version of INA186-Q1. Wide dynamic range.
INA186-Q1	**-0.3 V to +42 V**	**±50 µV**	**45 kHz**	**±1%**	**65 µA**	**Low input bias current (I_B = ±500 pA typical). Wide dynamic range. Operates with supply voltage (V_S) of 1.7 V.**
INA180-Q1 (INA181-Q1)	-0.3 V to +28 V	±500 µV	350 kHz	±1%	0.5 mA	Single, dual, and quad channel. Uni- or bi-directional versions

DELL/HP/LENOVO EXHIBIT 1015
Page 23

Copyright © 2022 Texas Instruments Incorporated

According to Table 1, the INA240-Q1 provides the best performance, but is not optimized to monitor a 12-V battery compared to INA186-Q1, which requires less power, cost, and package size. The INA186-Q1 does have high AC CMRR (140 dB) and large dynamic range (V_{OUT} swings to V_S - 40 mV over temperature). Additionally, the INA186-Q1 possesses a unique capacitively-coupled input architecture that increases differential input-resistance by 3 orders of magnitude compared to majority of CSAs. High input-impedance allows the user to filter current noise at the device input with minimal effect on gain. Using the data sheet equation if R_1 = 1 kΩ, the effective gain is reduced 43.5 m% for all variants except A1 (25 V/V). Figure 2 shows use of INA186-Q1 in battery monitoring. Filtering at the input (instead of output) means current noise is not amplified and the INA186-Q1 can drive a cleaner signal into the ADC without an output filter loading down the ADC.

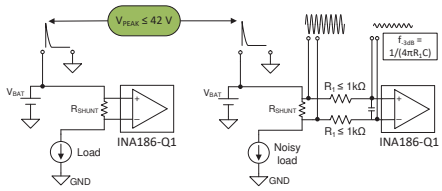

Figure 2. INA186-Q1 On 12-V Battery With and Without Noise Filtering

The breadth of the current sense portfolio enables the user to optimize tradeoffs when incorporating common input protection schemes. If the chosen device states that the Absolute Maximum Common-Mode Voltage rating cannot exceed your maximum expected voltage surge, then it needs input protection. Along with some passives, the current sensor needs transient voltage suppression (TVS) or Zener diodes at the inputs for protection. Figure 3 shows an example using the cost-optimized current sensor INA181-Q1.

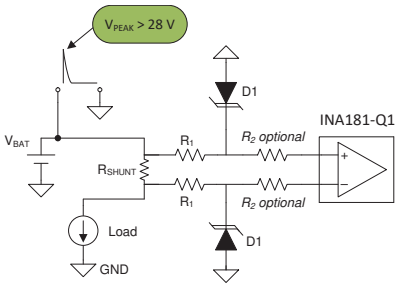

Figure 3. INA181-Q1 with Input Protection for V_{CM} > 28 V

In Figure 3, diodes D1 clamp the input V_{CM} of the device to less than 28 V, which is the absolute maximum for INA181-Q1. R_2 is optional and can be included to prevent simultaneous turn-on for D1 and the internal ESD structure of the CSA, but it is usually not needed. If it is needed, R_2 should be small compared to R_1. The power rating of diodes depends on the maximum expected voltage rise, but more importantly on the turn-on current. The diode current can be reduced by increasing R_1 resistance, but this reduces the effective gain of the circuit and, more critically, increases gain error variation for most current sensors (except INA186-Q1).

Given the internal resistor gain network and input differential resistance of the INA181-Q1, an engineer can calculate the effective circuit gain with R_1 using the equation in the data sheet. Keep in mind that adding external resistors broaden the system gain error variance beyond the data sheet limits. This is due to the fact that INA181-Q1 internal resistors are matched to be ratio metric, but are not trimmed to their typical values, so their absolute values can vary by ±20%.

Overall, an engineer can choose the INA181-Q1 because total cost with input protection is lower and increase in gain error variation is acceptable; however, devices with higher rated V_{CM} are more straightforward solutions that provide accurate current sensing over temperature with less complexity and fewer components.

Alternate Device Recommendations

See Table 2 for applications that need either larger V_{CM} ranges or integrated features such as shunt resistors or comparators.

Table 2. Alternate Device Recommendations

Device	Optimized Parameters	Performance Tradeoff
INA253	Integrated 2 mΩ shunt resistor (included in Gain Error spec). Enhanced PWM rejection	I_Q
INA301-Q1	BW and slew rate. Internal comparator with adjustable threshold and 1 µs alert response time	40 V V_{CM} max
INA302-Q1, INA303-Q1	**BW and slew rate. Dual comparator output with adjustable thresholds and 1 µs alert response time**	**40 V V_{CM} max**
LMP8278Q-Q1	-12 V to +50 V V_{CM} survivability. Adjustable gain and filtering. Buffered output	V_{OS}
INA1x8-Q1, INA1x9-Q1	**≥60 V_{CM}. Current output (adjustable gain). Trimmed input resistors. Low I_B when powered off**	**V_{OS}**

Related Documentation

1. Transient Robustness for Current Shunt Monitor
2. Measuring Current To Detect Out-of-Range Conditions
3. Precision current measurements on high-voltage power-supply rails
4. Integrating the Current Sensing Signal Path
5. Shunt-based Current-Sensing Solutions for BMS applications in HEVs and EVs

DELL/HP/LENOVO EXHIBIT 1015
Page 24

Copyright © 2022 Texas Instruments Incorporated

Application Brief

Simplify Voltage and Current Measurement in Battery Test Equipment

Kevin Zhang, Maka Luo, Raphael Puzio

Introduction

Battery test equipment is used to verify battery pack functionality and performance prior to shipment to the customer. This application brief outlines three major functional tests that a battery tester performs while showing how to achieve the desired level of regulated error.

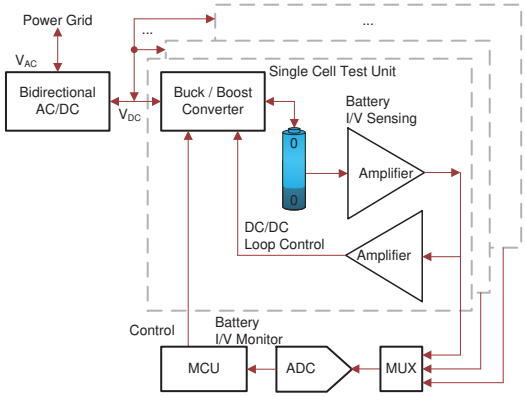

Figure 1. Traditional Battery Test Equipment Block Diagram

Formation and Grading of Batteries

After the battery cell or battery pack is assembled, each unit must undergo at least one fully controlled charge or discharge cycle to initialize the device, and convert it to a functional power storage device. Battery vendors also use this process to grade battery cells, the process of separating the cells into different performance groups according to target specifications. For a more in-depth look at the battery initialization circuit, view our *Bi-Directional Battery Initialization System Power Board Reference Design*.

Loop and Feature Test

The loop and feature test refers to cycling the battery cell or battery pack through repeated charging and discharging sequences. This verifies that the battery's characteristic life and reliability parameters to assure they are within the specified range of the defined tolerances.

Function Test

Functional testing verifies that the battery pack is operational prior to shipment to the customer. This assures that each battery cell and battery pack is working properly.

Amplifier Usage in Battery Test Equipment

In typical systems, a Buck converter is used as the power source for battery charging and a Boost converter is used for battery discharge. Both conventional operational amplifiers (Op Amps) and instrumentation amplifiers (INAs) are used in the feedback loop to control both the charging and discharging voltage and current.

To charge the battery, the buck converter is enabled while the first-stage voltage Op Amps and current-sense INA are used to measure battery voltage and charging current of the battery cell or battery pack. The switch between the current-sense Op Amp and the sense resistor s that the input to the current-sense Op Amp is positive regardless of the direction of current flow across the sense resistor. These conditioned signals serve as the input to the second stage error Op Amp for either the voltage loop or current loop, respectively.

The gained up output from each error Op Amp serves as the input to the third-stage buffer Op Amp. The output of the buffer Op Amp feeds into the feedback pin of the buck converter to control the output voltage or current. Depending on the output current requirements, the buck-boost functions can be accomplished several ways; however, two approaches are the most common.

For higher current requirements, an integrated charge controller and external FET can be used. However, for lower-current requirements, which are common in cost-sensitive systems, this function can be implemented discretely as shown in Figure 2. The design engineer can adjust V_{V_ref} and V_{I_ref} on the positive input pins of the error Op Amps to adjust the target output voltage and current of the buck converter to the optimal value.

DELL/HP/LENOVO EXHIBIT 1015
Page 25

Copyright © 2022 Texas Instruments Incorporated

In a typical battery charging application, the output voltage of the current-loop error Op Amp starts high, putting the buck converter into constant current output.

In the next phase, the output voltage of the voltage-loop error Op Amp goes high, putting the buck converter into constant voltage output. When the battery is being discharged, the boost converter is enabled. The Op Amps control the battery discharge current and voltage, functioning in the same manner as they do when the battery is being charged. The boost converter boosts the battery voltage to V_{DC}, which is usually 12 V.

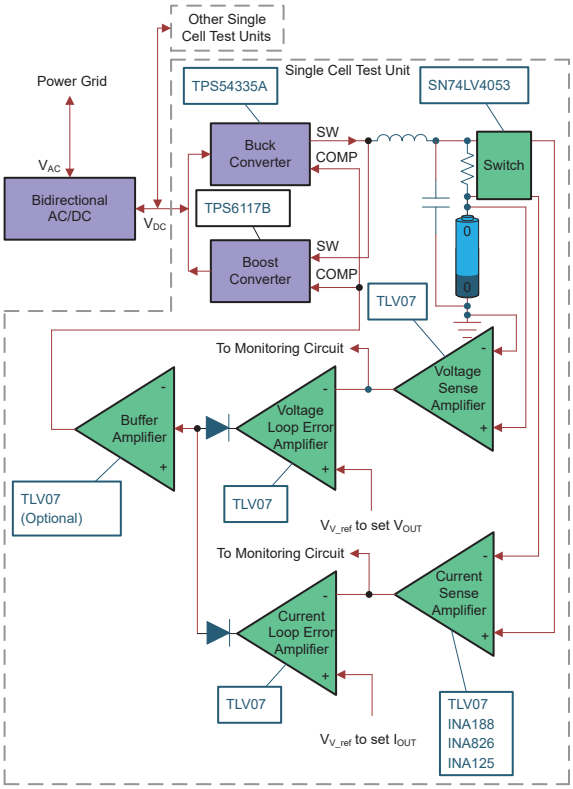

Figure 2. Battery Test Equipment Typical Amplifier Configuration

System and Amplifier Requirements

Typical system requirements:

- Regulated current error ERR_{Iout} = 0.1%
- Regulated voltage error ERR_{Vout} = 0.5%

To achieve the above requirements, an Op Amp with low offset voltage (V_{OS}), low V_{OS} temperature drift and high CMRR, like the TLV07 is needed.

The Op Amps create a closed loop with the power stage, the voltage on the inverting input of the error Op Amp will be very close to the reference voltage V_{V_ref} and V_{I_ref}, thus minimizing the error from the large loop gain.

Since the major errors come from the voltage- and current-sense amplifiers, it's important to select high precision amplifiers.

For example, if the desired regulated output current target, I_{SET} is 10A, and the current sensing resistor, R_{SENSE} is 20mΩ, the input error of amplifier will be:

$$V_{I\_ERR\_RTI} < ERR_{I_{OUT}} \times I_{SET} \times R_{SENSE} \quad 200\ \mu V \tag{1}$$

$$V_{V\_ERR\_RTI} < ERR_{V_{OUT}} \times V_{SET} \quad 21\ mV \tag{2}$$

If the desired regulated output voltage is set to V_{SET} 4.2 V, the input error of amplifier will be:

Assuming the temperature rises from 25°C to 85°C and the battery voltage is 4 V, we can easily calculate the real world error from one of our low-offset and low offset drift Op Amps, the TLV07.

INA125 (3)

$$V_{TLV07\_ERR\_RTI} = V_{OS\_max} + dV_{OS} / dT_{max} \times 60\,^{\circ}C + 4\ V / CMRR_{DC}$$
$$= 100\ \mu V + 0.9\ \mu V / ^{\circ}C \times 60\,^{\circ}C + 4\ V / 158489$$
$$= 154\ \mu V < V_{I\_ERR\_RTI} \text{ and } V_{V\_ERR\_RTI}$$

Using the calculated numbers above, it is clear that a precision Op Amp similar to TLV07 is an ideal Op Amp to meet the system output current and voltage error requirements.

For our next example, we use an INA which integrates all the feedback resistors. delivers V_{OS_max} = 150 µV and dV_{OS}/dT_{max} = 0.5 µV/°C and is a good fit to perform the current-shunt amplifier function in a system with a simplified design.

If the system requires even higher performance specifications, the current and voltage error can be changed to 0.05% and 0.1%, respectively. In this case, precision INAs such as the zero-drift INA188, can be used. Assuming the same conditions from the above example, with a 60°C temperature rise and VBAT of 4 V, the real-world error from the INA188 is: $V_{I\_ERR\_RTI}$= 67 µV and $V_{V\_ERR\_RTI}$< = 4.2 mV

Reference Circuit of Amplifier in Each Stage

Looking at the voltage and current sense reference circuit shown in Figure 3, I+ and I- contributions are resultant of the current sense resistors. The B+ and B- components are from the positive and negative terminals of the battery. Since the actual battery voltage might be higher than 5 V, the typical Op Amp power supply is 12 V. The TLV07, INA188 and INA125 all have 36 V max (±18 V) supply voltage, meeting system requirements.

DELL/HP/LENOVO EXHIBIT 1015
Page 26

Copyright © 2022 Texas Instruments Incorporated

As battery current can be close to zero during charge and discharge cycles, a bi-polar supply is implemented in the first stage current-sensing Op Amp to avoid clipping the current sense signal. Type-III compensation is applied on each stage of the error Op Amp , with R12, C3, C4 and R6, C1, C2 respectively. To assure loop stability, these values should be fine-tuned based on the actual power supply design.

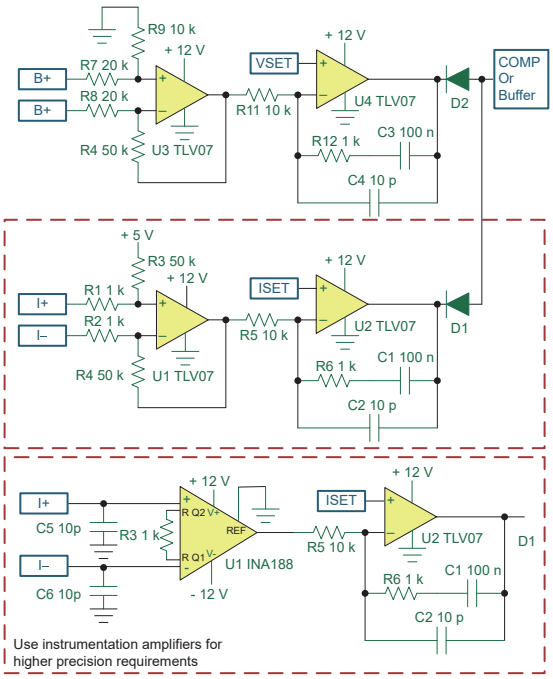

Figure 3. Voltage and Current Sense Circuit with TLV07 and INA188 in High-end Application

Conclusion

Voltage and current sensing are the two most significant measurements in battery test equipment systems. Furthermore, the most important parametric characteristics for this application is a precision Op Amp or INAs that feature low voltage-offset and drift. These parameters are critical to assure high-performance sensing while minimizing the first stage contribution to system error.

Table 1. Three Types of Op Amp for Battery Test Equipment

Device	System Benefits
TLV07 (Op Amp) Device	Low-offset voltage and low-drift provide sufficient regulated current and voltage error for cost-sensitive systems
INA125 (Instrumentation amplifier)	High CMR (common mode rejection) of (100 dB Min) increases dynamic range at the output; low offset voltage and low drift reduce the need for costly and time-consuming calibration
INA188 (Instrumentation amplifier)	Low-offset voltage and zero-drift provide lower regulated current error and voltage error while a high CMR (104 dB Min) decreases common mode interference

DELL/HP/LENOVO EXHIBIT 1015
Page 27

Copyright © 2022 Texas Instruments Incorporated

Application Brief

Current Sensing Applications in Communication Infrastructure Equipment

In this article, a fresh look is taken into the major electronic end equipment for cellular wireless infrastructure (WI) from the perspective of current sensing (CS). Several types of CS applications in such equipment are reviewed.

Current Sensing in Power Supply Block

As shown in Figure 1, the power supply for the WI equipment comes from the utility grid, solar energy, or sometimes a combination of the two. The power supply is often backed up with battery storage for uninterrupted service during a power outage, especially in remote areas where solely depending on grid electricity is not an option due to limitations from physical accessibility or economic feasibility.

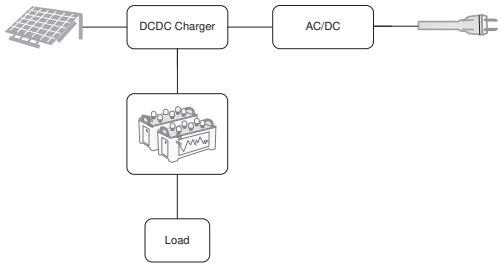

Figure 1. WI Power Supply Block Diagram

The power supply block can be either integrated into the WI end equipment, or it can be stand-alone. Regardless of the implementation, a common requirement is an intelligent power management system to charge batteries and ensure seamless transitions between power sources. Current and voltage sensing is an indispensable function in such power management systems.

Current sensing can be implemented either on the high side or on the low side. Dedicated high-voltage, shunt-based, Current Sense Amplifiers (CSA) such as the INA240 might be needed for fault to ground prevention. Magnetic current sensors such as the TMCS1100 or TMCS1101 are both great choice for high-voltage applications due to their inherent galvanic isolation.

Current Sensing at Point Of Load

The typical WI electronic system is powered from a DC bus, such as 12 V to 48 V. Lower supply rails are derived from the bus voltage.

These lower voltage rails are called point of load (POL) supplies, stemming from the fact that they satisfy a set of specific requirements and are normally located in the vicinity of the loads they serve. Depending on how critical or informative the measurements are, sometimes it is desirable to monitor the current or voltage in one or more of these POL supplies. The main requirements for the CSA in this situation may include (among others) accuracy, speed, dynamic range, and power dissipation by the associated shunt resistor.

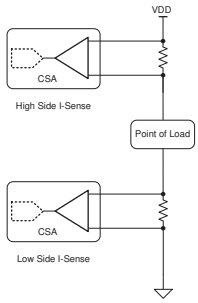

Figure 2. Point of Load Current Sensing Options

As shown in Figure 2, current can be sensed at either side of the load, with analog or digital CSA, and through either external or integrated shunt resistor.

CSA comes with a matched resistor gain network that provides value in terms of cost, board space, and performance. Most CSAs feature fixed-gain, ranging from 10 to 1000. Some CSAs offer configurable gain. For example, the INA225 has configurable gain through two digital control pins, while other CSAs have a gain that is configurable through an external resistor, such as INA139.

System integration is further improved when a CSA is chosen that comes with integrated analog to digital conversion (ADC) and a shunt resistor.

DELL/HP/LENOVO EXHIBIT 1015
Page 28

Copyright © 2022 Texas Instruments Incorporated

The key considerations in selecting a CSA and associated shunt resistor for POL measurement starts with common-mode voltage, current range, accuracy, and speed. In addition, if overcurrent protection (OCP) is required, a CSA with an integrated fast-action comparator is often an ideal choice, where system parameters such as offset and propagation delay are specified. Compared with discrete components, such a CSA helps remove uncertainties and therefore simplifies the design.

To monitor multiple POLs, a multi-channel CSA like the INA2290 or INA4180 might make sense, as it offers four channels of analog output. When a microcontroller or FPGA is present in the equipment, an ADC channel is normally available, as well as a digital bus such as I^2C. In this situation, either an analog or digital output CSA may be implemented as a POL monitor. A multi-channel digital monitor such as the INA3221 is another option that frees up controller ADC channels while taking advantage of an existing I^2C bus. This device offers a number of warning and alert signals for fast action in case of a fault, as well as current, voltage, or power information of three independent channels.

Current Sensing in Power Amplifiers

The bias current in power amplifiers (PA) is adjusted to suit the need of an end application, modulation scheme, and operation class. A typical PA with current sensing is shown in Figure 3.

The PA is often constructed with silicon LDMOS or GaN technology. Current sensing is important in PA applications, both from the standpoint of the PA operation and from the standpoint of overall energy efficiency management. Under the same bias voltage, the PA bias current differs due to device variation. Further, the bias current changes with temperature. Consequently, in order for the PA controller to accurately control the bias current, both the current and temperature information must be available. The bias current information is necessary in improving system efficiency, where around 50% of total system power is consumed by the PA itself.

Integrated power amplifier monitor and control systems, such as the AMC7836, can simplify PA circuit design. As mentioned, due to natural device variation, knowing gate voltage alone is sometimes not sufficient in order to achieve accurate bias current control. When current sensing is required in the control loop, a separate high-voltage CSA, such as the INA290, can be used.

Power amplifier monitor and control systems such as the AMC7834 are another option with integrated current sensing capability. Such a solution offers the possibility of further reducing board space.

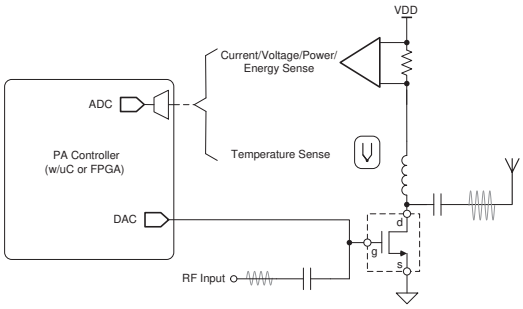

Figure 3. PA Biasing and Current Sensing

Alternate Device Recommendations

TI offers a complete line of CSA and magnetic sensors that serve well in WI end equipment, from high-voltage supply current and PA current sensing to general purpose POL current monitoring. The high-voltage INA202 also comes with integrated comparator and reference output to facilitate the OCP requirement. For applications where superior accuracy is required, the INA190 family of devices are good choices with nA input bias current. These devices are essential in situations where the sensed current is very small. Some of these devices come with Enable pins for further power reduction; some are offered in a WCSP package for board space optimization. For applications with lower common mode voltage requirements, the INA180 offers excellent speed and overall performance value. The INA301 family of devices features integrated fast comparators and high-speed amplifiers. Both outputs are available that suit the need of OCP.

Table 1. Alternate Device Recommendations

Device	Characteristics
INA202	Common mode range -16 V to 80 V; Comparator
INA180	Low I_Q; High bandwidth
INA190	Low I_Q; Low I_B; Enable pin
INA301	High bandwidth amplifier; Fast comparator

Related Documentation

1. Hybrid Battery Charger With Load Control for Telecom Equipment
2. Precision Current Measurements on High-Voltage Power Supply Rails
3. Common Uses for Multi-Channel Current Monitoring

DELL/HP/LENOVO EXHIBIT 1015
Page 29

Copyright © 2022 Texas Instruments Incorporated

Application Brief

Safety and Protection for Discrete Digital Outputs in a PLC System Using Current Sense Amplifiers

A Programmable Logic Controller (PLC) is the most widely accepted computer protocol in industrial control systems for factory automation application. PLC system is a controller that controls, prioritizes, and provides status of the system. The controller is programmed via basic binary logic much like a modern computer. The PLC system consists of:

1. PLC computer processor
2. The power supply rack
3. Back plane for power
4. Digital input and output module
5. Analog input and output module
6. Computer software
7. A network interface for remote connectivity

PLC systems are widely used in industrial applications that is accelerating industrial 4.0 revolution. PLC systems are enabling faster integration of semiconductor devices for control and automation to increase efficiency and improve factory throughput. Industrial automation and integration examples include controlling of temperature, turning on and off a light fault indication, weighing of a package using pressure sensors, turning on and off a solenoid relay.

As industrial systems can be noisy environments with high-frequency signals and noise coupling into low-voltage signals, the PLC system's output modules are optocoupled. Its robustness to noise, simple architecture, ease of programming language, industrial certifications, and safety features are the reasons PLC systems are the most widely used industrial protocol.

PLC System Block Diagram

The inputs and outputs of the PLC system are categorized as digital or analog as illustrated in Figure 1. The digital inputs provide an ON-OFF status to the control circuitry. Some examples of digital input devices include limit switches, photoelectric sensor, proximity, and pressure sensor. Analog input devices such as thermocouples, tachometers, and force sensors provide variable output responses.

PLC digital outputs are used to turn ON-OFF the starter to engage a motor, to turn on a lamp to indicate a fault, or to control the solenoid that engages relay. The analog outputs include current level output and resistance level that can be used to control and monitor heaters or control the speed of a motor.

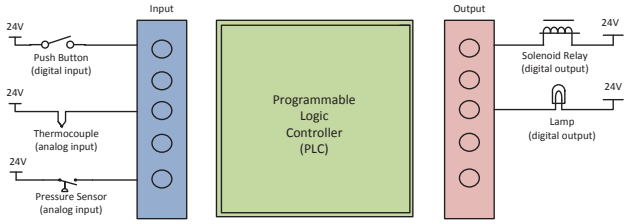

Figure 1. PLC System Block Diagram

Discrete PLC Digital Outputs Safety

Figure 2 illustrates a description of a PLC digital output circuit. PLC digital outputs are designed with high-drive strength capability that can be as high as 1 A. The digital outputs can be connected to drive a solenoid relay to take control of an action initiated by the PLC controller. Discrete current sensors connected in series with the load, as shown in Figure 2, monitor current flowing to the load continuously and report the presence of excessive currents to the controller to take an action. As PLC digital outputs can swing from –0.7 V to 24 V, a high-side current sense amplifier with low-offset and low-gain error enables safety for high-output drives.

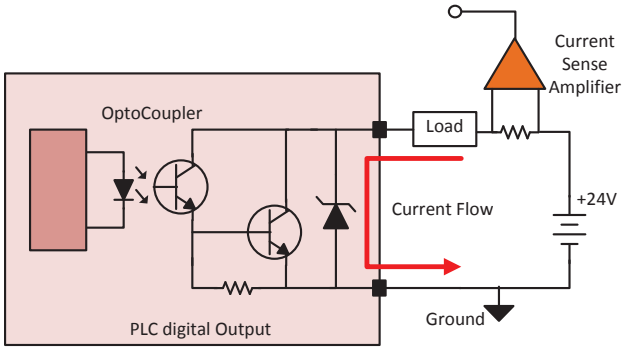

Figure 2. PLC Digital Output Sinking Current Circuit

DELL/HP/LENOVO EXHIBIT 1015
Page 30

Copyright © 2022 Texas Instruments Incorporated

As the PLC digital output drive can be high, the sinking current capability is one of the key safety parameters. The outputs are designed with NPN transistors with a built in diodes for over voltage protection. The system ensures that when the PLC digital outputs are engaged the sinking current from the power supply is always within the PLC's specified, over temperature operating range. A discrete current sense amplifier can protect the digital outputs from an overcurrent condition, provide diagnostics to address faulty load conditions and address preventive action for premature system failure.

High-Current PLC Digital Outputs Safety

PLC digital outputs can be directly tied to high-current solenoid drivers or high-current LED lamps to close relays or to indicate a fault in a factory automation application. If the current output drive is higher than the PLC system is rated for, a discrete FET can be used to control the current flow form the 24-V supply to the load. Figure 3 illustrates the connection of a PLC digital output to an external low RDS on FET to further increase the output drive strength. One disadvantage of this approach is the reliability of the external FET. Using a current-sensing amplifier to monitor the load current can ensure that the PLC system is operating safely.

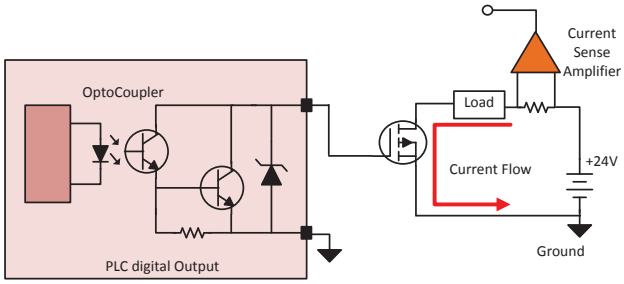

Figure 3. PLC Discrete Digital Output Control

INA240 is a high-precision, bidirectional current sense amplifier with low-input offset and gain drift across temperature range designed for measuring currents on discrete PLC digital outputs. The INA240 is specifically designed to work in switched node environments where the common-mode transients will have large dv/dt signals. The ability to reject high dv/dt signals enables accurate current measurements to ensure necessary protection and meet the required safety standards. The INA240 has low maximum input offset voltage of 25 µV and a maximum gain error of 0.2% allowing for smaller shunt resistance values to be used without sacrificing measurement accuracy. The offset drift and gain error drift is as low as 0.25µV/°C and 2.5ppm/°C respectively enabling accurate and stable current measurements across temperature.

The signal throughput bandwidth of INA240 is 400 kHz at the gain 20. The high bandwidth and high slew rate (2V/µs) enables the amplifier to be used for detecting fast over current or shorted load conditions provided the sampling ADC within the PLC system is fast enough to sample currents.

Alternate Device Recommendations

The INA293 is another device to recommend for this application. The INA293 is a unidirectional current sense amplifier that can support a common-mode voltage from –4 V to 110 V and can survive –20 V to 116 V. This large negative common-mode survivability is important due to inductive kickbacks seen when engaging the solenoid or a motor starter. The INA293 also has a high-bandwidth of 1MHz which enables fast reaction times in the event of an overcurrent scenario.

The INA290 is also another device that can be used in PLC systems. INA290 is designed to operate with a common-mode voltage range from 2.7 V to 110 V. Although this is a high-side sense device, the INA290 can survive common-mode transients of –20 V to 120 V.

Table 1. Alternate Device Recommendations

Device	Optimized Parameter	Performance Trade-Off
INA293	Bandwidth : 1.3 MHz, V_{CM}: –4 V to 110 V, Offset voltage: 15 µV, Gain error: 0.15%	N/A
INA281	Bandwidth : 1.3 MHz, V_{CM}: –4 V to 110 V, Cost Optimized	Offset voltage: 55 µV, gain error: 0.5
INA290	Bandwidth: 1.1 MHz, Offset voltage: 12 µV, Gain error: 0.1%, Package: SC-70	High-side only (V_{CM}: -4 to 110V)
INA280	Bandwidth: 1.1 MHz, Package: SC-70, Cost Optimized	Offset Voltage: 150 µV, Gain error: 0.5%

Related Documentation

1. Current Sensing in an H-Bridge
2. Switching Power Supply Current Measurements
3. High-Side Drive, High-Side Solenoid Monitor With PWM Rejection
4. Measuring Current To Detect Out-of-Range Conditions

DELL/HP/LENOVO EXHIBIT 1015
Page 31

Copyright © 2022 Texas Instruments Incorporated

Current sensing in high-power USB Type-C® applications

By Ben Damkroger
Product Marketing Engineer, Sensing-CSPS

Introduction

The introduction of USB Type-C,® also designated USB-C,® connectors eliminated the frustration of flipping USB cables three and four times before finding the correct orientation to plug in a device. A smaller, reversible cable is not the only thing new with the evolution of USB technology, however; the standard also enables the replacement of various electrical connectors including USB-B and USB-A, HDMI, DisplayPort, and 3.5-mm audio cables. Sadly, USB-C alone still has a power limit of only 15 W. However, USB Power Delivery (USB PD) increased that power limit to 100 W through the introduction of configurable voltage levels of 5 V, 9 V, 15 V or 20 V. This 100-W limit means that higher-power devices such as laptops, tablets and monitors can all charge and operate using a single USB PD cable.

This increased power has more design considerations than previous standards, however. USB-C cables have 24 pins, including four Vbus wires and four ground wires, more than USB 3.0. These Vbus lines require overvoltage, overcurrent and reverse-current protection. Protections should be implemented that detect transient spikes caused by faults in the Vbus line or faults internal to a load device. These protections should be added in both source and sink (load) devices to guarantee safe operation. For sink devices, due to lower manufacturing costs of power adapters and corners cut during construction as a result, there is no guarantee that consumers will use power adapters with sufficient protection. Sometimes faulty power adapters may provide the 20 V before USB negotiation, which might overload sink devices. For source devices, cheap USB cables and USB-C PD devices may have faulty wiring, causing a short on the load side of a charger and ultimately requiring some protection.

When designing devices that act as power sources, such as docking stations or chargers, shield devices are required downstream, especially when running near the 100-W limit of USB PD. Integrated current sensing in USB PD controllers is usually only ±10% to ±15% accurate. These accuracy levels may be sufficient for some, but a more accurate solution for overcurrent protection maximizes the amount of current that the USB port can provide while staying below a fixed power level.

For example, to account for current tolerance in a 20-V/5-A (100-W) system, the maximum current limit should be set 10% away from 5 A at 4.545 A (5 A × 1 ÷ 1.1). With a maximum current of 4.545 A, the maximum possible power delivered to a load device is 90.9 W. Additionally, when the current is 10% below the maximum current at 4.090 A, a system would only deliver 81.8 W of power.

Figure 1. USB PD power range

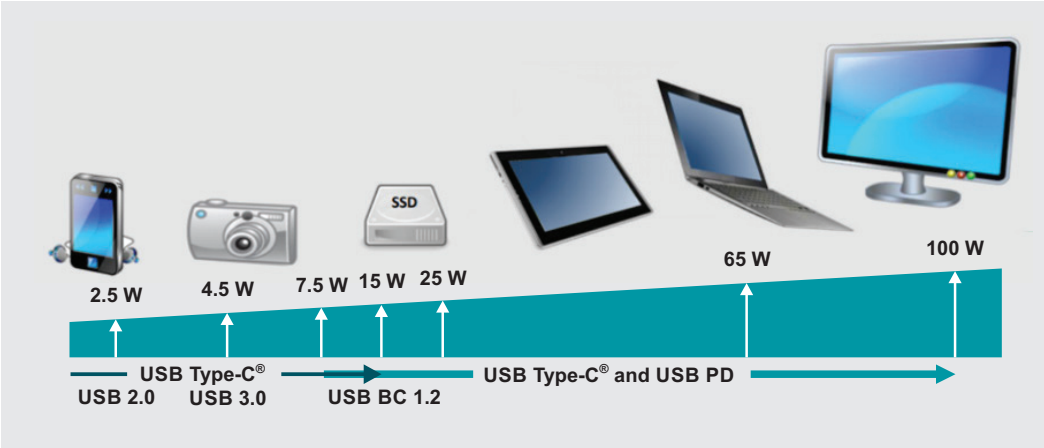

DELL/HP/LENOVO EXHIBIT 1015
Page 32

To set a higher current threshold, a discrete current-sense amplifier like the INA199, with its 150-µV voltage offset and 1% gain error, can easily provide 1.5% accuracy when the current is greater than 1 A in a 100-W application. This device enables the current limit to be set at 4.926 A (5 A × 1 ÷ 1.015), which in turn means that the USB port could deliver 98.52 W to the load. Figure 2 shows the root-sum-square (RSS) error curves for the INA199 and INA381.

Figure 2. INA199 and INA381 total measurement error

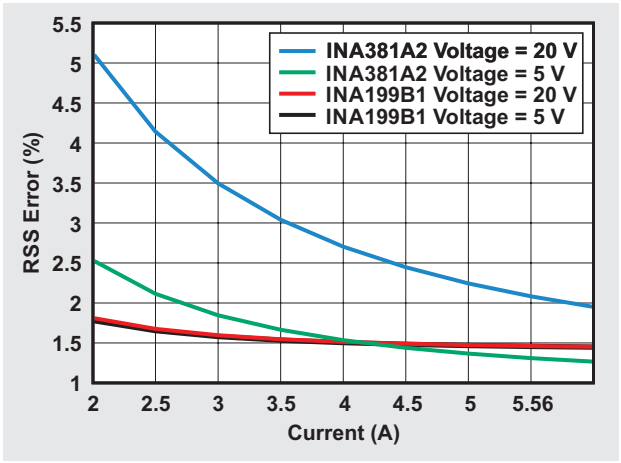

For devices that sink power over a USB PD supply, it is strongly suggested to include current sensing to protect from internal faults. It is impossible to know whether consumers will power peripheral devices with USB PD controllers that have adequate overcurrent protection. One easy solution is to design internal overcurrent protection in the device's Vbus input by wiring a discrete current-sense amplifier, a comparator and a field-effect transistor (FET) as an e-fuse. With an e-fuse, the current-sense amplifier detects whether the current is too high and the comparator controls the FET triggers that turn off the FET and interrupts the current.

In the most straightforward implementation, the analog output of the comparator could be used to trip the FET. Or digital logic could be used with an analog-to-digital converter (ADC) and microcontroller (MCU) to decide when to switch the FET off. These overcurrent protection schemes provide a response time that is much faster than a thermal fuse and can be reset and reused without replacement. The INA381 current-sense amplifier, with its fast integrated comparator, shrinks the bill of materials by eliminating the need for a comparator and makes the design process more straightforward. Figure 3 is a simplified circuit using this device.

Figure 3. Simplified e-fuse circuit using the INA381

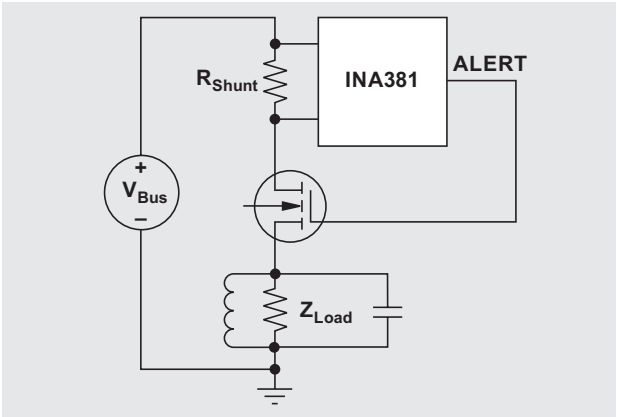

Selecting the correct current sensor is essential, especially given their variety. Digital power monitors, for example, provide an integrated ADC that frees up space on a system's MCU analog inputs, while also giving access to extra features like power calculation and accumulation (energy). Analog current-sense amplifiers, on the other hand, are more popular because of their low cost and versatility. The integrated gain resistors and input stages of analog current-sense amplifiers enable their inputs to detect common-mode voltages beyond their supply, thus making these devices better for current sensing than standard operational amplifiers. Current-sense amplifiers can also come integrated with comparators for faster response times and alert signals for overcurrent protection; the latter is especially important for protecting USB-C PD devices.

DELL/HP/LENOVO EXHIBIT 1015
Page 33

$$\text{Total Error} = \sqrt{V_{os}^2 + \text{CMRR}^2 + \text{PSRR}^2 + \text{Gain Error}^2 + \text{Shunt Tolerance}^2 + \text{Bias Current}^2} \quad (1)$$

As previously mentioned, current-sense amplifiers are more accurate than the integrated current sensing of most USB-C PD controllers. To understand why, first consider the various error sources found on current-sensing data sheets and use these sources to calculate errors using the root-sum-square (RSS) method. The different error sources present in current-sensing amplifiers are shown by Equation 1 above.

The input offset voltage (V_{OS}) is the dominant source of error when measuring small currents because it is larger in relation to the relatively small shunt voltage—it diminishes as the shunt voltage increases at higher currents. This offset error is inherent to all amplifiers and is a result of resistor and transistor mismatching. Gain error dominates the error at larger currents, as it remains present even at high currents, and does not diminish as the shunt voltage increases. These error sources can be manually calculated using Equation 1. For additional information, consult the References and Related Web sites on this page.

Conclusion

With the advent of USB PD, the number of high-power USB devices continues to grow. This article presented the options available to implement current protections and power monitoring, and also compensate for tolerance errors that are typically encountered with integrated current sensing in USB PD controllers. The need to maximize power to a load in a power-source device or protect a power-sink device is also highlighted. Current-sensing amplifiers provide an easy solution to many of these design challenges, with higher accuracy and greater design flexibility.

References

1. TI Precision Labs – Current Sense Amplifiers, Texas Instruments training and videos
2. Maximize your system with current sense amplifiers, Overview, Texas Instruments products and reference designs

Related Web sites

Product information:
INA199
INA381
INA381 Design tools and simulation

DELL/HP/LENOVO EXHIBIT 1015
Page 34

Application Brief

Low-Drift, Precision, In-Line Motor Current Measurements With PWM Rejection

Scott Hill *Current Sensing Products*

The demand for higher efficiency systems continues to increase, leading to direct pressure for improvement in motor operating efficiency and control. This focus applies to nearly all classes of electric motors including those used in white goods, industrial drives and in automotive applications. The operational characteristics of the motor fed back into the control algorithm are critical to ensure the motor is operating at its peak efficiency. Phase current is one of these critical diagnostic feedback elements used by the system controller enabling optimum motor performance.

Due to the continuity of the measurement signal and direct correlation to the phase currents, an ideal location to measure the motor current is directly in-line with each phase as shown in Figure 1. Measuring current in other locations, such as the low-side of each phase, requires recombination and processing before meaningful data can be utilized by the control algorithm.

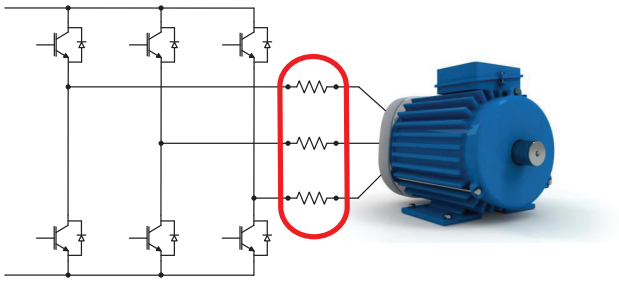

Figure 1. In-Line Current Sensing

The drive circuitry for the motor generates pulse width modulated (PWM) signals to control the motor's operation. These modulated signal subject the measurement circuitry placed in-line with each motor phase to common-mode voltage transitions that can switch between large voltage levels over very short time periods. An ideal amplifier would have the ability to completely reject the common-mode voltage component of the measurement and only amplifier the differential voltage corresponding to the current flowing through the shunt resistor. Unfortunately, real-world amplifiers are not ideal and are influenced by the large PWM-driven input voltage steps. Because real-world amplifiers do not have infinite common-mode rejection potentially large, unwanted disturbances appear at the amplifier output corresponding to each input voltage step as shown in Figure 2. These output disturbances, or glitches, can be very large and take significant time to settle following the input transition depending on the characteristics of the amplifier.

Figure 2. Typical Output Glitch From Large Input V_{CM} Step

A common approach to this measurement is to select a current sense amplifier with a wide bandwidth. In order to stay above the audible frequency range, modulation frequencies ranging from 20kHz to 30kHz are typically selected. Amplifier selection for making in-line current measurements in these PWM-driven applications targets amplifiers with signal bandwidths in the 200kHz to 500kHz range. The selection of the amplifier was not historically based on actual signal bandwidth which are significantly lower than the PWM signal. The higher amplifier bandwidths were selected to allow the output glitch to settle quickly following an input voltage transition.

The INA240 is a high common-mode, bi-directional current sense amplifier designed specifically for these types of PWM-driven applications. This device approaches the problem of measuring a small differential voltage in the presence of large common-mode voltage steps using integrated enhanced PWM rejection circuitry to significantly reduce the output disturbance and settle quickly. Standard current sense

DELL/HP/LENOVO EXHIBIT 1015
Page 35

Copyright © 2021 Texas Instruments Incorporated

amplifiers rely on a high signal bandwidth to allow the output to recover quickly following the step, while the INA240 features a fast current sense amplifier with internal PWM rejection circuitry to achieve an improved output response with reduced output disturbance. Figure 3 illustrates the improved response of the INA240 output due to this internal enhanced PWM rejection feature.

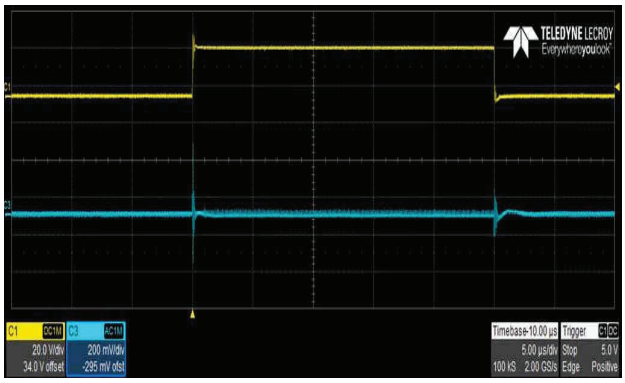

Figure 3. Reduced Output Glitch By Enhanced PWM Rejection

For many three-phase applications there are few requirements on the accuracy of this in-line current measurement. Limited output glitch is necessary to prevent false over-current indications in addition to having an output that quickly responds to ensure sufficient control of the compensation loop. For other systems, such as electronic power steering (EPS), precise current measurements are needed to provide the required feedback control to the torque assist system. The primary objectives in an EPS system are to assist with additional torque to the driver's applied torque on the steering wheel and provide a representative feel in the steering response corresponding to the driving conditions. Phase to phase current measurement errors can become very noticeable in this tightly controlled system. Any unaccounted for variance between phases leads directly to increased torque ripple that is perceptible to the driver through the steering wheel. Reducing the measurement errors, especially those induced by temperature, is critical to maintain the accurate feedback control and to deliver a seamless user experience.

Common system-level calibration frequently reduces the reliance on an amplifier's performance at room temperature to provide precise measurement accuracy. However, accounting for parameter shifts such as input offset voltage and gain error as the operating temperature varies is more challenging. Good temperature compensation schemes are based on characterization of the amplifier's performance variation over temperature and rely on consistent and repeatable response to external conditions from system to system. Improving the capability of the amplifier to remain stable with minimal temperature induced shifts is ideal to reduce the need for complex compensation methods.

The INA240 features a 25µV maximum input offset voltage and a 0.20% maximum gain error specification at room temperature. More importantly for applications requiring temperature stable measurements, the device's input offset voltage drift is 250nV/°C with a 2.5ppm/°C amplifier gain drift. Even as the operating temperature varies over the system's entire temperature range, the measurement accuracy remains consistent.

The INA253 features all of the performance benefits of INA240 amplifier with the inclusion of integrated shunt. The integrated shunt is a low inductive, precision, 2mΩ 0.1% with a temperature drift of <15ppm/°C. The INA253 is the most accurate current sense amplifier that eliminates the error introduced due to shunt and parasitic introduced due to the layout.

Combining the measurement temperature stability, wide dynamic input range, and most importantly enhanced PWM input rejection, the INA240 is an ideal choice for PWM-driven applications requiring accurate and reliable measurements for precisely controlled performance.

DELL/HP/LENOVO EXHIBIT 1015
Page 36

Copyright © 2021 Texas Instruments Incorporated

Alternate Device Recommendations

Depending on the necessary system requirements, there may be additional devices that provide the needed performance and functionality. The INA282 is able to measure very precisely large common-mode voltages that do not change as quickly as what typically is seen in PWM driven applications making it ideal for high voltage DC applications. The LMP8481 is a bi-directional current sense amplifier used for high common-mode voltages that do not require the amplifier to include ground within the input voltage range.

Table 1. Alternate Device Recommendations

Device	Optimized Parameter	Performance Trade-Off
INA282	Common-Mode Input Range: -14V to +80V; MSOP-8 Package	Low Bandwidth, Ideal For DC Applications
LMP8481	Low Power: 155uA; MSOP-8 Package	Common-Mode Input Range: 4.5V to 76V; Lower Accuracy

Table 2. Related TI Application Briefs

SBOA202	Benefits of a Low Inductive Shunt for Current Sensing in PWM Applications
SBOA189	Precision Brightness and Color Mixing in LED Lighting Using Discrete Current Sense Amplifiers
SBOA161	Low-Drift, Low-Side Current Measurements for Three-Phase Systems
SBOA163	High-Side Motor Current Monitoring for Over-Current Protection

DELL/HP/LENOVO EXHIBIT 1015
Page 37

Copyright © 2021 Texas Instruments Incorporated

Tech Note

High-Side Drive, High-Side Solenoid Monitor With PWM Rejection

Arjun Prakash,Current Sensing Products

A solenoid is an electromechanical device that is made up of a coil wound around a movable iron material, also called an armature or plunger. When an electric current is passed through the coil, a magnetic field is generated, causing the armature to travel over a fixed range. Figure 1 shows an illustration of an electromechanical solenoid. Solenoids are often designed for simple ON - OFF applications like relays that require only two states of operation. These solenoids can be also be designed for linear operation where the current is proportional to the position of the armature. Linear solenoids are used in several applications where pressure, fluid, or air is precisely regulated. In automotive applications, linear solenoids are used in fuel injectors, transmission, hydraulic suspension, and for haptic effects. Linear solenoids are seen in critical medical applications that require precise air flow control as well as industrial applications that redirect and control fluid flow.

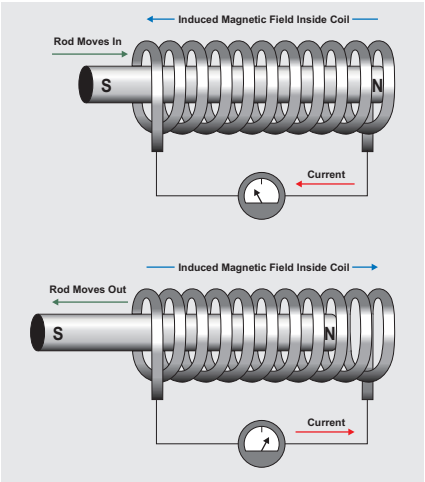

Figure 1. Electromechanical Solenoid Construction

There are multiple configurations for connecting and driving solenoids. One common approach to driving solenoids is to use a high-side driver configuration. In this configuration, the current sense amplifier is connected between high-side switch and the solenoid as shown in Figure 2. One benefit to this configuration is the solenoid is isolated from the battery voltage when the high-side switch is turned off. Eliminating the solenoid's continuous connection to the battery voltage reduces solenoid degradation and early lifetime failures.

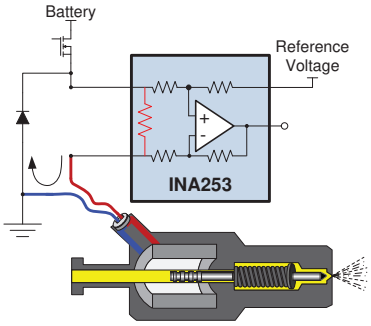

Figure 2. High-Side Drive With High-Side Current Sense

The current sense amplifier shown in Figure 2 must be able to reject high common-mode dv/dt signals as well as support common-mode voltages that fall below ground. In the above configuration when the high-side switch is turned on, the solenoid is energized by the current flowing from the battery. The duty cycle of the high-side switch determines the current flowing through the solenoid, which in turn controls the travel range of the plunger. At the time when the high-side switch is turned off, the current flows through the flyback diode forcing the common voltage to drop one diode drop below ground.

Solenoids and valves are highly inductive in nature. The effective impedance of solenoid can be simplified as resistance and inductance. The coil is constructed using copper (4000ppm/°C) and the effective resistance varies on the type of solenoids from 1 Ω for haptic applications to 10 Ω for a linear or positional valve systems. The inductance for all of the solenoids ranges from 1 mH to 10 mH. Figure 3 shows example of current profile of a solenoid driver in open-loop mode at 25 °C and 125 °C. Over a 100 °C rise in ambient temperature without compensating for Cu resistance, the plunger travel distance accuracy is around 40%. The solenoid current flow directly controls the plunger's travel distance. If the ambient

DELL/HP/LENOVO EXHIBIT 1015
Page 38

Copyright © 2020 Texas Instruments Incorporated

temperature changes, the plunger's travel distance changes impacting the output control which could be regulating pressure, fluid, or air.

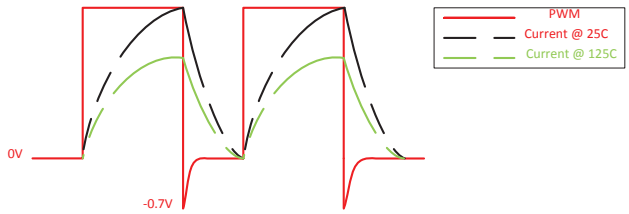

Figure 3. Solenoid Current Profile Across Temperature

Measuring current in solenoid and valve applications provides the capability to detect changes in a solenoid's operating characteristics. Current measurement can identify the effects of a decrease in the magnetic field of an aging solenoid to detect faulty components before they fail. In an open-loop solenoid control system, the variation of effective impedance can drift 40% for a 100 °C rise in temperature from the copper windings. Current measurement used in a current control feedback loop can reduce the solenoid's impedance variation over temperature from 40% down to 0.2% using the INA253 current sense amplifier.

The INA253 is a high-side, bidirectional current sense amplifier with an integrated 2-mΩ low inductive shunt that can support large common-mode voltages ranging from –4 V to +80 V. The integrated shunt is factory calibrated to provide <0.1% total system accuracy with a gain error temperature drift of <15ppm/°C. The INA253 is specifically designed to operate within PWM applications where high dv/dt transients needs to be suppressed. INA253 is designed with circuitry to suppress dv/dt signals. This features lowers blanking time enabling accurate PWM current measurements at lower duty cycle. The device's low offset voltage, drift, gain, and high bandwidth of 400 kHz enables accurate in-line current measurements for PWM applications. Valve applications requiring precision control of fluid, air, and pressure all benefit from the accuracy and temperature stability in the current measurement by using the INA253. The integrated precision shunt of the INA253 can provide a high-accuracy position control of <0.2% across temperature, eliminating the need for current measurement calibration across temperature.

Alternate Device Recommendations

The INA240 is a high-side, bidirectional current sense amplifier that can support large common-mode voltages ranging from –4 V to +80 V. The INA240 is specifically designed to operate within PWM applications where high dv/dt transients needs to be suppressed. The device's low offset voltage of 25 µV (maximum), drift of 250nV/°C (maximum), gain (0.2%) and high bandwidth of 400 kHz enables accurate in-line current measurements for PWM applications.

The INA293 is another device to recommend for this application. The INA293 is a unidirectional current sense amplifier that can support a common mode voltage from -4 V to 110 V and can survive -20 V to 120 V. This large negative common-mode survivability is important due to inductive kickbacks seen when engaging the solenoid. The INA293 also has a high-bandwidth of 1 MHz which enables fast reaction times in the event of an overcurrent scenario. Furthermore, the INA293 is an high-precision current sense amplifier with a low offset voltage of 15 µV and gain error of 0.15%.

The INA281 is another device to recommend, which is a unidirectional current sense amplifier similar. It can support a common-mode voltage from -4 V to 110 V and also survive -20 V to 120 V. The INA281 has a high bandwidth of 1 MHz for fast in-line measurements.

Table 1. Alternate Device Recommendations

DEVICE	OPTIMIZED PARAMETER	PERFORMANCE TRADE-OFF
INA240	PWM settling time: 2 µs, V_{os}: 25 µV	Package: TSSOP
INA293	V_{cm} range: -4 V to +110 V, Bandwidth: 1.3 MHz, Offset voltage: 15 µV, Gain error: 0.15%	No enhanced PWM rejection
INA281	V_{cm} range: -4 V to +110 V, Bandwidth: 1.3 MHz, Cost Optimized	No enhanced PWM rejected, Offset voltage: 50 µV, Gain error: 0.5%

Table 2. Related TI TechNotes

DOCUMENT	TITLE
SBOA189	Precision Brightness and Color Mixing in LED Lighting Using Discrete Current Sense Amplifiers
SBOA161	Low-Drift, Low-Side Current Measurements for ThreePhase Systems
SBOA163	High-Side Motor Current Monitoring for Over-Current Protection
SBOA193	Safety and Protection for Discrete Digital Outputs in a PLC System Using Current Sense Amplifiers

DELL/HP/LENOVO EXHIBIT 1015
Page 39

Copyright © 2020 Texas Instruments Incorporated

Most switching power supplies are designed with closed-loop feedback circuitry to provide stable power under various transient and load conditions. The feedback methodology options fall into two general categories, voltage mode control (VMC) and current mode control (CMC). Both methodologies have their strengths and weakness that determine the appropriate selection for the end-equipment application.

Control Methodologies

Voltage mode control utilizes a scaled value of the output voltage as the feedback signal. This methodology provides simple, straight–forward feedback architecture for the control path. However, this method has several disadvantages that should be noted. The most significant disadvantage is output voltage regulation requires sensing a change in output voltage and propagation through the entire feedback signal and filter before the output is appropriately compensated. This can generate a unacceptably slow response for systems that desire high levels of regulation. The feedback compensation of the supply requires a higher level of analysis to address the two poles introduced by the output low–pass filter. Additionally, the feedback component values must be adjusted since different input voltages affect the overall loop gain.

Current mode control addresses the above short-falls of voltage mode control by using the inductor current waveform for control. This signal is included with the output voltage feedback loop as a second, fast response control loop. The additional feedback loop does potentially increase the circuit/feedback complexity, so the advantages need to be evaluated as part of the design requirements.

By using the inductor current as part of the feedback control:

1. The added current feedback loop responds faster compared with only using the output voltage for feedback control. Additionally, with the inductor current information, the circuit can be designed to provide pulse by pulse current limiting allowing rapid detection and control for current limiting needs.
2. The power supply looks like a voltage controlled current source. This permits a modular supply design to allow load sharing between multiple supplies in a parallel configuration.
3. The effects of the inductor in the control loop can be minimized since the current feedback loop effectively reduces the compensation to a single pole requirement.

While current mode control addresses some of the drawbacks of VMC, it introduces challenges that can effect the circuit performance. The addition of the current feedback loop increases the complexity of the control/feedback circuit and circuit analysis. Stability across the entire range of duty cycles and sensitivity to noise signals are other items that need to be considered in the selection of current mode control. CMC can further be broken down into several different types of control schemes: peak, valley, emulated, hysteretic, and average CMC. The below text discusses the two most common methodologies used in circuit design — peak and average current mode control.

Peak Current Mode Control

Peak current mode control (PCMC) utilizes the current waveform directly as the ramp waveform into the PWM–generation comparator instead of a externally generated sawtooth– or triangle–signal like VMC. The up-slope portion of the inductor current or high–side transistor current waveform is used to provide a fast response control loop in addition to the existing voltage control loop. As shown in Figure 1, the current signal is compared with the output of the voltage error amplifier to generate the PWM control signal for the power supply.

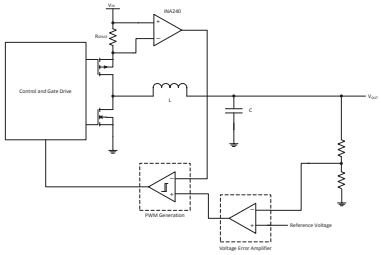

Figure 1. Block Diagram of PCMC circuit

DELL/HP/LENOVO EXHIBIT 1015
Page 40

Copyright © 2022 Texas Instruments Incorporated

Switching power supplies provide high levels of efficiency between the input and output power rails. To maintain the high efficiency of the converter, ideally the sense resistor used to measure the inductor current is as small as possible to reduce power loss due to the measurement. This small–valued resistor results in a small amplitude feedback signal. Since the inductor current waveform is used directly as the comparator input signal, PCMC is known to be susceptible to noise and voltage transients. Using a current sense amplifier like the INA240 with high common-mode rejection ratio (CMRR) provides suppression of transients associated with pulse-width modulation (PWM) signals and systems. The gain flexibility of the INA240 allows the inductor current waveform be amplified to provide a larger signal for comparison without the need for additional gain or sacrificing performance. Additionally, the low offset and gain errors provide a reduction in design variations and changes across temperature. To utilize PCMC, the inductor current necessitates a high common–mode voltage measurement. The INA240 common–mode range allows for a wide range in supply input and output voltages.

It should be noted that PCMC most often adds slope compensation to address stability issues with duty cycles greater than 50%. The slope compensation is added to the inductor current before being used as the comparator input signal.

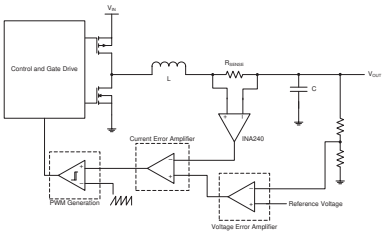

Figure 2. Block Diagram of ACMC circuit

Average Current Mode Control

Average current mode control (ACMC) utilizes the inductor current waveform and an additional gain and integration stage before the signal is compared to a externally provided ramp waveform (similar to VMC). This allows improved immunity to noise and removes the need for slope compensation. Figure 2 shows a block diagram of ACMC operation for a buck converter.

The noise sensitivity of PCMC methodology is improved using ACMC to acceptable performance levels with the INA240 high CMRR helping to provide additional transient reduction. The INA240 high common–mode range is required to make the inductor current measurement and allows usage of the current amplifier in a wide–range of output voltages. The INA240 high accuracy and low drift specifications provide consistent measurement across temperature and different assemblies.

The INA240 provides performance and features for measurement accuracy which is needed to maintain good control signal integrity. The INA240 features a 25µV maximum input offset voltage and a 0.20% maximum gain error specification at room temperature. Temperature stability is important to maintain system performance and the INA240 provides input offset voltage drift of 250nV/°C with a 2.5ppm/°C amplifier gain drift. The INA240 features enhanced PWM rejection to improve performance with large common-mode transients and a wide common-mode input range for maximum design variance for supply output voltages.

Alternative Device Recommendations

Based on system requirements, alternative devices are available that can provide the needed performance and functionality. The LMP8601 family provides lower performance levels than the INA240 for in-line sensing applications. The INA282 allows current measurement for high common-mode voltages, making it ideal for high voltage DC application that do not have PWM signals. The INA290 is a high-voltage current sense amplifier with high bandwidth packaged in a small SC-70 package.

Table 1. Alternative Device Recommendations

Device	Optimized Parameters	Performance Trade-Off
INA253	Integrated Low inductive precision shunt: 2mΩ, 0.1%, Enhanced PWM rejection	+/-15A maximum continuous current at T_A = 85°C
INA282	Low power, High Gain Options, High Supply Voltage	No Enhanced PWM Rejection, Higher drift specifications
INA290	Wide Common–Mode Input Range, High bandwidth, Small SC-70 package	No Enhanced PWM Rejection, Unidirectional, Common–mode range does not include ground

Related Documentation

1. Precision Brightness and Color Mixing in LED Lighting Using Discrete Current Sense Amplifiers
2. Current Sensing in an H-Bridge
3. Switching Power Supply Current Measurements

DELL/HP/LENOVO EXHIBIT 1015
Page 41

Copyright © 2022 Texas Instruments Incorporated

There are many different switching power supply topologies available to meet system power requirements. DC–DC switching converters reduce a higher voltage DC rail to a lower voltage DC rail. These converter architectures include buck, boost, buck-boost, and flyback topologies. DC–AC switching converters convert a DC input voltage to an AC output voltage.

As implied by their name, switching converters employ various switches, transistors/FETs and/or diodes, to translate the input voltage to the desired output voltage at high system efficiency levels. The switching nature of these converters present challenges in trying to accurately measure the current waveforms. Voltage node requirements, system control requirements, and measurement drift are areas to consider when selecting current sense amplifiers.

Voltage Node Requirements

Each node in the circuit architecture has a different common-mode voltage and behavior. Measuring currents at each of these locations has different characteristics that the measurement circuit must take into consideration. Figure 1 illustrates the different nodes of a buck/step-down converter. The circuit shows a basic circuit consisting of a half H–bridge output stage with a low-pass filter constructed from an inductor and capacitor. The control circuitry, output stage drivers, and load are not shown.

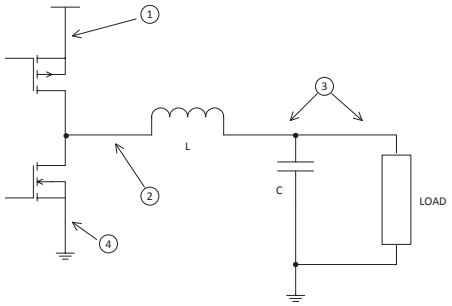

Figure 1. DC–DC Switching Power Supply – Buck Architecture

Node 1 voltage is tied to the input supply of the converter. This is the high voltage the converter is “stepping-down” to the lower output voltage. Current measurements at this node are measuring the current flowing through the high-side devices of the half H–bridge and are used primarily for overcurrent/short–circuit detection with a comparator. Any measurements being made at this node require high common-mode circuits with the performance to measure a small differential voltage.

Node 2 is the mid-point of the half H–bridge and displays the pulse-width modulation (PWM) signal that switching power supplies are based around. Current measurements at this location provide the inductor current for system control and overcurrent/short–circuit detection. The voltage transitions between the upper voltage and ground (or negative supply) in the PWM ratio that is averaged to produce the correct output voltage. Node 2 voltage will have sharp common-mode transitions, so measurements here need to be able to handle the transition voltage in magnitude as well as suppressing the transient in the output waveform.

Node 3 voltage is the converter output voltage, which is a DC voltage level with a small voltage ripple when observed on oscilloscope. Measurements at this location will have similar requirements to Node 1 and provide the inductor current for use in system control and overcurrent/short–circuit detection. Even though Node 3 voltage is less than Node 1, the desired output voltage level may still require measurement circuitry to handle a high common-mode voltage.

Node 4 voltage is tied to ground of the circuit. This node will see low, close to ground, common-mode levels so measurements at this location have a reduced set of requirements compared with the previously mentioned locations.

Other DC–DC switching architectures have similar behavior as the nodes described above, although they may be at different locations in the converter circuitry.

Measurement Drift Requirements

Switching power supplies are highly efficient circuits for voltage level translation, but there are still power losses in the conversion. These power losses are system efficiency losses that manifest as thermal generation or heat. Depending on the power levels of the converter, this can be a significant thermal source.

DELL/HP/LENOVO EXHIBIT 1015
Page 42

Copyright © 2022 Texas Instruments Incorporated

The INA240 has a-low thermal drift spec, which means that the current measurement does not change significantly due to heat generation. To further reduce the heat generated, the INA240 comes in different gain versions, which allow for the decrease in value of the current sense resistor. Traditional amplifiers can have significant decreases in performance as amplifier gain increases. By contrast, all gains versions of the INA240 have excellent electrical specifications allowing the achievement of high performance levels across different gain variants. Table 1 provides a comparison of the power dissipation difference between gains.

Table 1. Power Dissipation Summary(1)

Parameter	Gain		
	20V/V	100V/V	200V/V
Input Voltage (mV)	150	30	15
R_{SENSE} (mΩ)	15	3	1.5
Power dissipated (W)	1.5	0.30	0.15

(1) Full-scale output voltage = 3 V and current measurement = 10A

System Control and Monitoring Requirements

Most switching power supplies employ closed-feedback systems to provide stable, well regulated power. In order to provide optimized feedback control, precision measurements are desired. Amplifier specifications, like offset and gain errors, can significantly influence the regulation ability of the control system. Different feedback methods are used depending on the system requirements and desired complexity of the circuitry. Additionally, system power monitoring is a growing need as designs optimize and report the power consumption during different operating modes of the end equipment.

Voltage mode feedback compares a scaled version of the output voltage to a reference voltage to obtain the error voltage. This feedback method is relatively simple, but provides slow feedback as the system must allow the output voltage to change before adjustments can be made. Current measurements for voltage mode feedback generally monitor the load currents and determine if any short–circuits are present. The most important current amplifier criteria for voltage mode feedback converters is the common-mode output voltage of the converter. The output voltage on these converters ranges from low voltages used for microprocessors and low voltage digital circuitry (1.8 V to 5 V) to high voltages used for 48 V or higher systems. The output waveform, while after the filter, may still contain noise/transients that can disturb or cause errors in the measurement.

Current mode feedback adds a feedback loop to the control system that utilizes the system current. The current typically used is the inductor current in the converter (see Figure 2). This provides a much faster internal loop to run in parallel with the voltage feedback loop. In general, one of the down sides of current mode feedback is the susceptibility to noise/ transients on the signal.

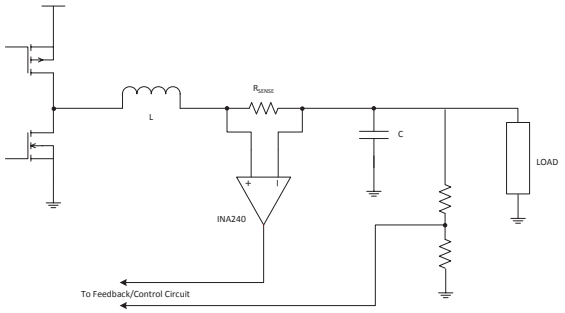

Figure 2. Current Sensing for Power Supply Control Feedback

Current mode feedback is generally split into peak current mode control and average current mode control. Peak current mode control utilizes the inductor current directly and therefore any noise or transients on the signal cause disturbances in the feedback loop. The INA240 is designed with high CMRR, which helps to attenuate any potential disturbances or noise due to the input signal.

Alternative Device Recommendations

Based on the system requirements, additional devices are available that may provide the needed performance and functionality. For applications requiring the lower performance levels than the INA240, use the INA290. The LMP8481 is a bi-directional current sense amplifier used for high common-mode voltages that do not require the amplifier to include ground in the input voltage range.

Table 2. Alternative Device Recommendations

Device	Optimized Parameters	Performance Trade-Off
INA253	Integrated Low Inductive Shunt: 2mΩ, PWM rejection	+/-15A at T_A= 85°C
INA290	Wider Common-Mode Input Range, Small Package (SC-70)	No Enhanced PWM Rejection
LMP8481	Wide Common-Mode Input Range, Low power	No Enhanced PWM Rejection, Common-mode range does not include ground

Related Documentation

1. Precision Brightness and Color Mixing in LED Lighting Using Discrete Current Sense Amplifiers
2. Current Sensing in an H-Bridge
3. Benefits of a Low Inductive Shunt for Current Sensing in PWM Applications

DELL/HP/LENOVO EXHIBIT 1015
Page 43

Copyright © 2022 Texas Instruments Incorporated

Increase Measurement Accuracy Using High-Speed Amplifiers for Low-Side Shunt Current Monitoring

Author: Leaphar Castro

The need to accurately and quickly detect the load current through a low-side shunt resistor is a critical application in systems requiring overcurrent, feedback control loops, battery monitoring, and power-supply monitoring. Load current is often measured using low-side current sensing, which is when the voltage is measured across a shunt-resistor that is placed between the load and ground. One common way to discretely implement low-side current monitoring is to use a current-sense amplifier in a difference configuration, as shown in Figure 1.

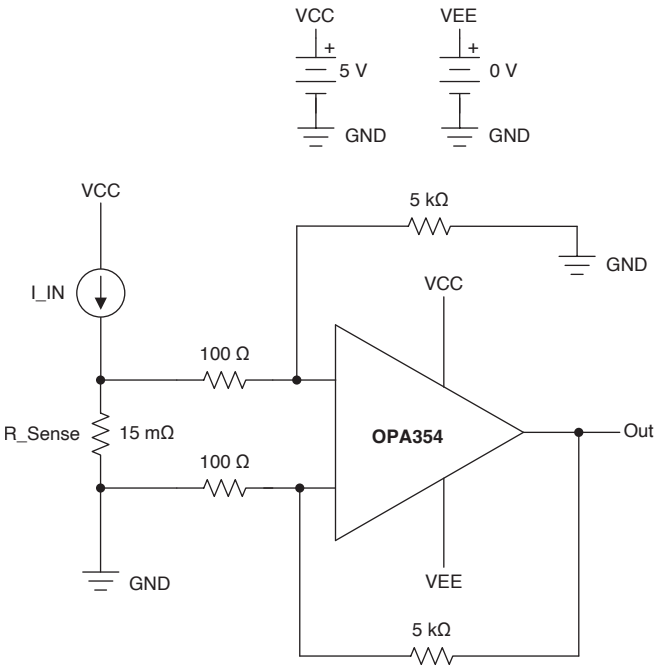

Figure 1. Low-Side Current Sensing Test Circuit Using the OPA354

Traditionally, this low-side current measurement is done with a dedicated current sense amplifier or a lower-speed amplifier connected to an external shunt-resistor. However, in applications that are required to detect a small, high-speed transient pulse, these amplifiers tend to lack the adequate bandwidth needed to replicate the pulse accurately in a single gain stage. A possible solution is to use multiple gain stages with a lower bandwidth device, thus increasing the amount of components and potentially increasing the shunt resistance in order to use a smaller gain. By having a large shunt-resistor, you introduce noise to your signal, increase the power dissipation, and cause ground disturbances. Instead, an alternative solution is to use a single high-speed amplifier. By using the high-speed amplifier. you have more gain-bandwidth, which allows you to use a single high-gain stage with a small shunt-resistor. For current sensing applications, you want to choose an amplifier with low offset and noise so that it does not degrade the accuracy of low-voltage measurements. Consider a widely used op-amp such as the OPA365. This device has a maximum input offset voltage as of 200 µV and an input voltage noise of 4.5 nV/$\sqrt{\text{Hz}}$ at 100 kHz. Using an amplifier such as OPA365 allows you to implement the circuit in a single high-gain stage, save board space, keep the shunt-resistor low, and enable driving an analog-to-digital converter (ADC) with a single device. The OPA365 is available in an AEC-Q100 version (OPA365-Q1) that supports automotive applications.

Choosing the correct amplifier simplifies detection of high-current spikes that may cause damage to the system or reduce motor and servo efficiency, all while maximizing system efficiency. There are several benefits to using a high-speed amplifier in current-sensing circuit. For example, in applications such as power-supply monitoring, the duration of the pulse may be as low as 1 µs. Without being able to detect these transients, short-duration pulses may go unnoticed, and thus cause glitches or potential damage to the rest of the system. As shown in Figure 2, with a short-duration 1-µs pulse input in a gain of 50, the OPA354 is able to reach 3-V output and is able to replicate the original input signal much closer than a 400-kHz or a 20-MHz bandwidth op amp. As Figure 3 shows, 100-nA input pulse in a gain of 50 is introduced, and again the output response of the OPA354 is much closer than the other two devices.

DELL/HP/LENOVO EXHIBIT 1015
Page 44

Copyright © 2018–2019, Texas Instruments Incorporated

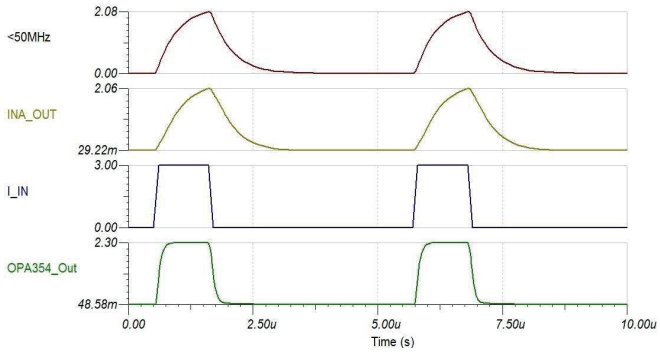

Figure 2. Output Response With a 3-A, 1-µs Input Into 15 mΩ With a Gain of 50 vs an Integrated and Lower-Bandwidth Device

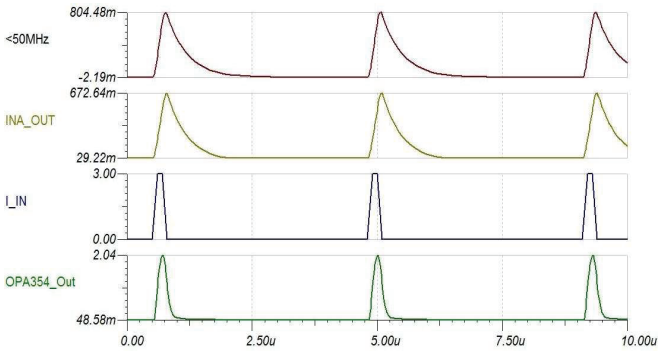

Figure 3. 100-nA Pulse Input Into 15 mΩ With a Gain of 50 vs an Integrated and Lower-Bandwidth Device

In another example, a three-phase inverter shunt-resistor is sensing large negative phase voltages. These PWM duty cycles tend to be very small (around 2 µs). The current sense amplifier must be able to settle to < 1% in this time frame, and in many cases drive an ADC. In applications such as three-phase inverters, maintain low distortion at the maximum rate at which the output changes with respect to time. In general, high-speed amplifiers offer slew rates > 25 V/µs and fast settling times of < 0.5 µs. These features make high-speed amplifiers a great choice when a high rate of change exists in the output voltage that is caused by a step change on the input in the form of short current pulses. High slew rate, larger bandwidth, and fast settling high-speed amplifiers contribute to keeping the detection time down to a few microseconds. Use a high-speed amplifier for motor-control applications to provide a fast and precise current measurement for the best dynamic motor control, minimum torque ripple, and minimal audible noise.

For maximum system efficiency when using an op amp to measure a small differential voltage signal from the shunt-resistor, make sure the op amp has enough bandwidth to make a precise and accurate measurement without introducing error to the signal. Measuring short duration pulses are a challenge, but by using a high-speed amplifier, high slew rates and plenty of bandwidth are available to track the input signal. This article used the OPA354 as an example, but there are many other available amplifiers offered by Texas Instruments. For automotive applications that require AEC-Q100 devices, and applications that require higher supply ranges or higher bandwidth, see Table 1. The amplifiers listed inTable 1 give alternative recommendations with optimized parameter benefits, and what the performance trade-offs are of using each of the devices.

Table 1. Alternative Device Recommendations

Device	Optimized Parameters	Performance Trade-Offs
OPA836	Higher bandwidth, lower power consumption	IN to –V rail, slightly less output current
OPA2836-Q1	Dual channel, higher bandwidth, lower power consumption, automotive qualification	IN to –V rail, slightly less output current
OPA354 OPA354-Q1	Higher bandwidth, higher slew rate, higher output current, automotive qualification (Q1)	Slightly higher offset and power consumption
LMH6618	Higher supply (maximum), higher bandwidth, lower I_Q	Slightly higher noise and less output current
LMH6611	Higher supply (maximum), higher bandwidth, higher slew rate	IN to –V rail, slightly higher power consumption
LMH6642 LMH6642Q-Q1	Single, dual, quad channels, higher supply (maximum), lower I_Q , automotive qualification (Q1)	IN to –V rail, slightly higher noise

DELL/HP/LENOVO EXHIBIT 1015
Page 45

Copyright © 2018–2019, Texas Instruments Incorporated

Application Brief

Extending Beyond the Max Common-Mode Range of Discrete Current-Sense Amplifiers

Arjun Prakash, Current Sensing Products

For high-side power supply current sensing needs, it is critical to understand the maximum voltage rating of the power supply. The maximum power supply voltage will drive the selection of a current sense amplifier. The common mode voltage of the current sense amplifier should exceed the maximum voltage on the power supply. For example, if a current is measured on the 48 V power supply with a transient voltage not exceeding 96 V a current sense amplifier with a maximum common mode voltage supporting 96 V needs to be designed. Likewise for a 400 V supply a common mode voltage of current sense amplifier supporting 400 V needs to be chosen.

The system cost solution of high voltage, high-side current sensing can be expensive considering a goal of <1% accuracy needs to be achieved. For common mode voltages higher than 90 V often the selection of current sense amplifiers are limited to isolation technology which can be expensive and BOM extensive. Below are some of the techniques that illustrates the extension of low voltage common mode current sense amplifiers beyond its maximum rating by adding a few inexpensive external components like resistors, diodes and PMOS FETs.

Common Mode Voltage Divider Using Resistors.

The simplest approach to monitor high voltage high-side current sensing is a design with a low voltage current sensing amplifier with external input voltage dividers, for example, if a 40 V common mode voltage amplifier is selected for a 80 V application, the 80 V input common mode needs to be divided down to 40 V common mode voltage. This voltage division can be accomplished using external resistor dividers as shown in the Figure 1. This is a simple design approach and the tradeoffs are significant. The gain error and CMRR of the amplifier are dependent on the accuracy and the matching of the external input divider resistors. Apart from gain error and CMRR errors, the tolerance of the external resistors will contribute to imbalance in input voltage causing additional output error. This error does increase over temperature depending on the drift specifications of the resistors. One technique to minimize output error is to use precision 0.1% matched low temperature drift external resistor dividers.

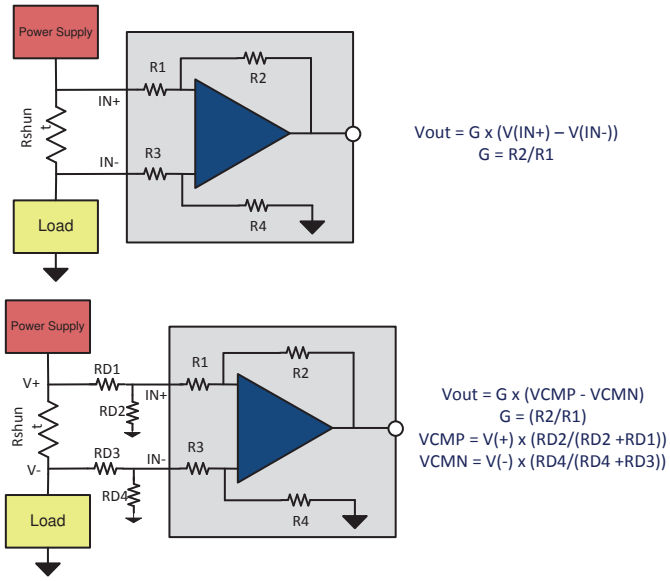

Figure 1. Extending Common Mode Range using Resistor Dividers

Extending Common Mode Range for Current Output Amplifiers

As voltage dividers has serious consequences with output error and degradation in performance, another alternative approach is to shift the ground reference of the current output amplifier to the high voltage common mode node as shown in Figure 2. Figure 2 enables current sensing at higher voltages beyond rated common mode voltage of INA168 is 60V. This technique can be extended to any voltage beyond 60V by designing an appropriate PMOS FET (Q1).

In Figure 2 Zener diode DZ1 regulates the supply voltage that the current shunt monitor operates within, and this voltage floats relative to the supply voltage. DZ1 is chosen to provide sufficient operating voltage for the combination of IC1 and Q1 over the expected power-supply range (typically from 5.1 V to 56 V). Select R1 to set the bias current for DZ1 at some value greater than the maximum quiescent current of

DELL/HP/LENOVO EXHIBIT 1015
Page 46

Copyright © 2022 Texas Instruments Incorporated

IC1. The INA168 shown in Figure 2 is specified at 90 µA maximum at 400 V. The bias current in DZ1 is approximately 1 mA at 400 V, well in excess of IC1's maximum current (the bias current value was selected to limit dissipation in R1 to less than 0.1 W). Connect a P-channel MOSFET, Q1, as shown to cascode the output current of IC1 down to or below ground level. Transistor Q1's voltage rating should exceed the difference between the total supply and DZ1 by several volts because of the upward voltage swing on Q1's source. Select RL, IC1's load resistor, as if IC1 were used alone. The cascode connection of Q1 enables using IC1 well in excess of its normal 60-V rating. The example circuit shown in Figure 2 was specifically designed to operate at 400 V.

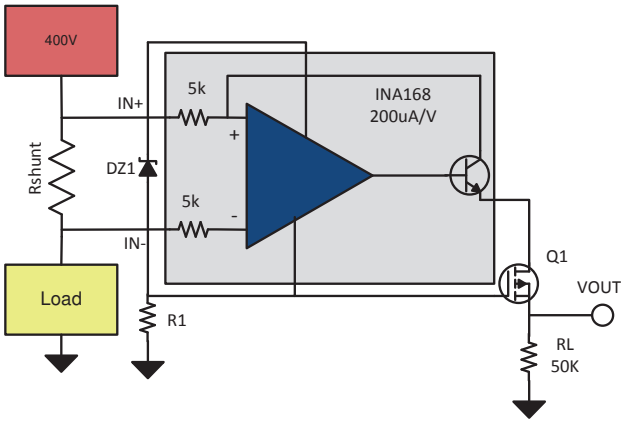

Figure 2. High-Side DC Current Measurements for 400-V Systems

Extending Common Mode Voltage Range for Power Monitors

System optimization and power monitoring for high voltage systems (40 V to 400 V), if implemented accurately can result in improvement of overall system power management and efficiency. Current, voltage and system power information can be beneficial in taking preventive steps to diagnose faults or calculate total power consumption of the system. Monitoring faults and power optimization will assist high voltage system in premature failures and significantly lower power savings by optimizing system shut down and wake up.

Figure 3 illustrates a methodology by using INA226 a 36 V common mode voltage power monitoring device to be used in applications supporting 40 V to 400 V systems. Shown in Figure 2 is the precision, rail-to-rail op amp OPA333 used to mirror the sense voltage across the shunt resistor on to a precision resistor R1. OPA333 is floated up to 400 V using a 5.1 V zener diode between its supply pins. The op amp drives the gate of the 600 V P-FET in a current follower configuration. A low leakage P-FET is chosen to obtain accurate readings even at the low end of the measurement. The voltage across R1 sets the drain current of the FET and by matching the resistor R2 in the drain of the FET to be equal to R1, VSENSE voltage is developed across R2 (VR2). Inputs of the current monitor INA226 are connected across R2 for current sensing. Hence the current monitor does not need the high common mode capability as it will only see common mode voltages around VSENSE which is usually less than 100mV. INA226 was chosen for current, voltage and power monitoring as it is a high accuracy current/voltage/power monitor with an I2C interface. The INA226 can also sense bus voltages less than 36 V. Since the bus voltage employed here is 400 V, a divider is employed to scale down the high voltage bus to a voltage within the common mode range of INA226. In this case a ratio of 64 is chosen and hence the bus voltage LSB can be scaled accordingly to obtain the actual bus voltage reading. In this case the a modified LSB of 80 mV could be used. Precision resistors are chosen for the divider to maintain accuracy of the bus measurement.

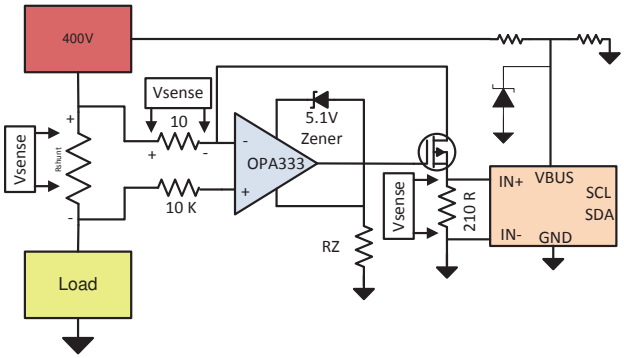

Figure 3. High Voltage Power Monitoring

Table 1. Alternate Device Recommendations

Device	Optimized Parameter	Performance Trade-Off
LMP8645HV	Bandwidth : 900kHz, Package: SOT-23-6	Slew rate: 0.5V/uS
INA220	MSOP-8 Package, I2C interface, Selectable I2C address	Gain Error (1%), Shunt Offset Voltage: 100uV
INA139	Package: SOT-23, Bandwidth: 4400 kHz, cost	Offset voltage: 1mV

Related Documentation

1. Current Sensing in an H-Bridge
2. Switching Power Supply Current Measurements
3. High-Side Drive, High-Side Solenoid Monitor With PWM Rejection

DELL/HP/LENOVO EXHIBIT 1015
Page 47

Copyright © 2022 Texas Instruments Incorporated

Application Brief

Interfacing a Differential-Output (Isolated) Amp to a Single-Ended Input ADC

Introduction

Whether you are sensing current in an industrial 3-phase servo motor system, a battery management system for an electric vehicle, or a photo voltaic inverter, it is often necessary to include some sort of safety isolation scheme. Safety-related standards define the specific isolation requirements for the end equipment associated with the particular design. Various factors come into play when determining what level of safety insulation (basic, supplemental, or reinforced) is required depending on the type of equipment, the voltage levels involved, and the environment that the equipment is to be installed.

Texas Instruments offers a variety of isolated current shunt amplifiers that are used in the previously-mentioned applications for voltage and current shunt sensing that meet either basic or reinforced insulation requirements. For applications requiring reinforced insulation, one such device is the AMC1301. The output of the AMC1301 is a fully differential signal centered around a common-mode voltage of 1.44 V that can be fed directly to a stand-alone analog-to-digital converter (ADC) as shown in Figure 1, or to the on-board ADC found in the MSP430 and C2000 family of micro-controller devices.

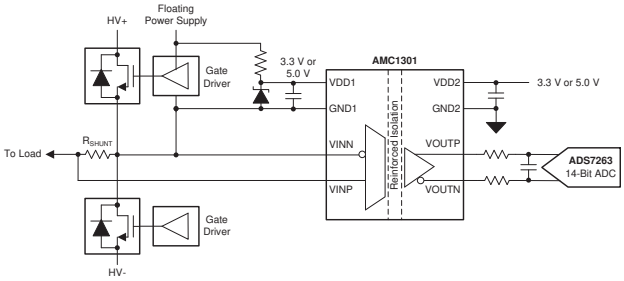

Figure 1. AMC1301 Functional Block Diagram

Embedded ADCs

Both the MSP430 and C2000 family of processors have embedded single-ended input ADCs so the question becomes, *How do I get this differential signal into my single-ended data converter?*

The simplest way to achieve this is to use only one output of the AMC1301 leaving the second output floating. The down side to this solution is that only half the output voltage swing is available to the data converter, reducing the dynamic range of the measurement. The analog input range to the AMC1301 is ±250 mV. With a fixed gain of 8.2, the VOUTN and VOUTP voltages are ±1.025 V centered around the 1.44-V common-mode output as shown in Figure 2. Differentially, the output voltage is ±2.05 V.

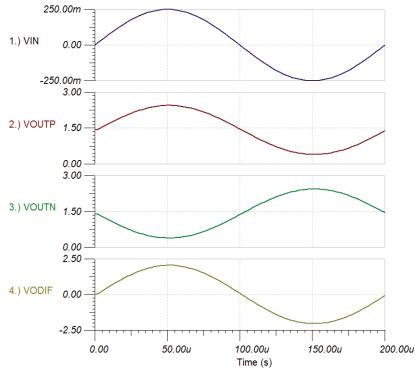

Figure 2. Differential Output Voltage

The addition of a differential to single-ended amplifier output stage, illustrated in Figure 3, allows the full output range of the AMC1301 to be provided to the ADC.

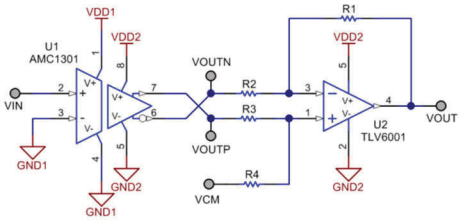

Figure 3. Differential to Single-Ended Output

DELL/HP/LENOVO EXHIBIT 1015
Page 48

Copyright © 2022 Texas Instruments Incorporated

Assuming a full scale sine wave of ±250 mV is applied at VIN; the internal gain of the AMC1301 will provide 2.05 Vpk-pk outputs at points VOUTP and VOUTN which are 180° out of phase. The difference between these signals, VODIF, is 4.1 Vpk-pk. When R1 = R4 and R2 = R3 the transfer function of the output stage is shown in Equation 1.

$$VOUT = VOUTP \times \left(\frac{R4}{R3}\right) + VOUTN \times \left(\frac{R1}{R2}\right) + VCM \quad (1)$$

With equal value resistors for R1 through R4 in Equation 1 and VCM set to 2.5 V, Equation 2 reduces to:

$$VOUT = (VOUTP - VOUTN) + VCM \quad (2)$$

The plots of Figure 4 show the input voltage and output voltages of the AMC1301 along with the output voltage of the final differential to single-ended output stage. Note that the differential voltage of ±2.05 V is transposed to a single-ended signal from 0.5 to 4.5 V.

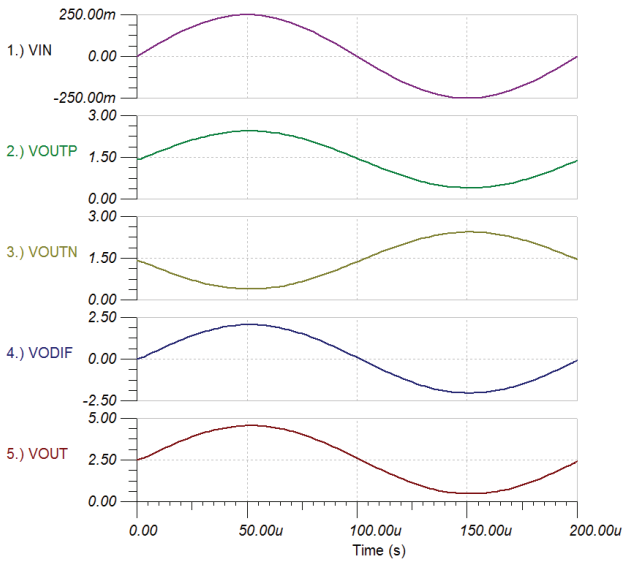

Figure 4. Single-Ended Output Voltage

Depending on the input voltage range of the ADC, gain or attenuation can be incorporated into the differential to single-ended stage to adjust the output swing. The output common mode voltage can be adjusted to fit the input needs of the ADC as well.

Design Example

The ADC12 found on the MSP430 devices have an input voltage range of 0–2.5 V when using the internal voltage reference. Using the VOUTP from the AMC1301 would provide the ADC12 with an input signal ranging from 0.415 V to 2.465 V, well within the input range of the converter while only utilizing half the input range of the AMC1301. As shown in Figure 5, utilizing a differential to single-ended amplifier configuration with a gain of 0.5 and common mode voltage of 1.25 V, the entire voltage range of the AMC1301 can be applied to the ADC12.

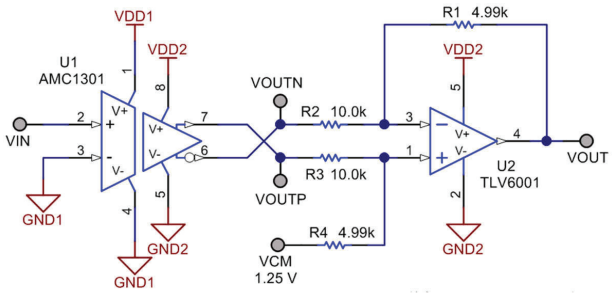

Figure 5. Scaled Differential to Single-Ended Output

Alternative Device Recommendations

The AMC1100 or AMC1200 provide basic isolation with similar performance to the AMC1301 at a lower price point. For applications requiring a bipolar output option, the TLV170 is an excellent choice.

Table 1. Alternative Device Recommendations

Device	Optimized Parameter	Performance Trade-Off
AMC1100	Galvanic Isolation up to 4250 V_{PEAK}	Lower Transient Immunity
AMC1200	Galvanic Isolation up to 4250 V_{PEAK}	Basic Isolation versus Reinforced
TLV170	Bi-polar operation to ±18 V	Higher input bias current

Conclusion

While it is possible to use a single output of the AMC1301 to drive a single-ended ADC, adding a differential to single-ended op-amp stage at the output ensures the target application will have the largest possible dynamic range.

Related Documentation

1. Low-Drift, Low-Side Current Measurements for Three-Phase Systems
2. Precision Current Measurements on High Voltage Power Supply Rails

DELL/HP/LENOVO EXHIBIT 1015
Page 49

Copyright © 2022 Texas Instruments Incorporated

Low-Drift, Precision, In-Line Isolated Magnetic Motor Current Measurements

Steven Loveless - Current Sensing Products

The demand for higher efficiency systems continues to increase, leading to direct pressure for improvement in motor operating efficiency and control. This focus applies to nearly all classes of electric motors, including those used in:

- White goods
- Industrial drives
- Automation
- Automotive applications

This is especially true in higher-power systems with elevated operating voltages. Operational characteristics of the motor fed back into the control algorithm are critical to ensure the motor is operating at peak efficiency and performance. Phase current is one of these critical diagnostic feedback elements used by the system controller to enable optimal motor performance.

Due to the continuity of the measurement signal and direct correlation to the phase currents, an ideal location to measure the motor current is directly in-line with each phase, as shown in Figure 1. Measuring current in other locations, such as the low-side of each phase, requires recombination and processing before meaningful data can be used by the control algorithm.

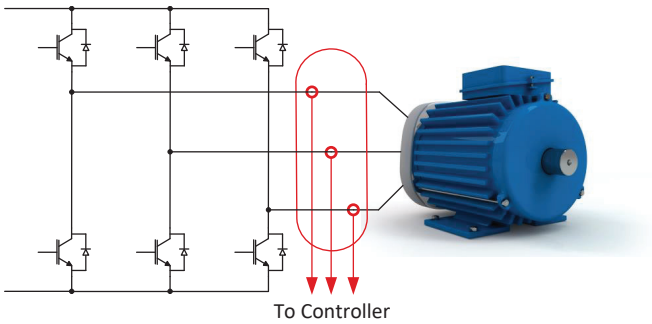

Figure 1. In-Line Current Sensing

The drive circuitry for the motor generates pulse width modulated (PWM) signals to control the operation of the motor. These modulated signals subject the measurement circuitry placed in-line with each motor phase to large voltage transients that switch between the positive and negative power rails every cycle. An ideal current sensor has the ability to completely reject the common-mode voltage component of the measurement, and only measure the current of interest. In-package magnetic current sensors like the TMCS1100 pass the phase current through a package leadframe, which creates an internal magnetic field. A galvanically isolated sensor then measures the magnetic field, providing a measurement of the current without any direct electrical connection between the sensor IC and the isolated phase current. By measuring only the magnetic field, the sensor provides isolation to high common-mode voltages, as well as excellent immunity to PWM switching transients. This results in excellent motor phase current measurements without unwanted disturbances at the sensor output due to large, PWM-driven input voltage steps. Figure 2 illustrates an RC-filtered TMCS1100 output waveform, along with the motor phase voltage and current waveforms. Only minor PWM-coupling due to measurement parasitics are observable, and the TMCS1100 output tracks the motor phase current with no significant output transients due to the 300-V switching events.

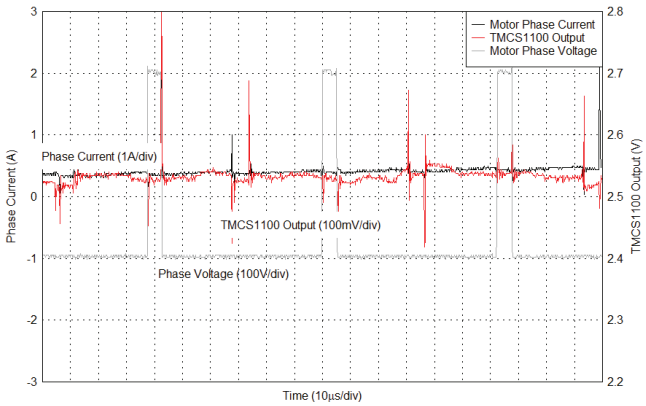

Figure 2. Motor Phase Current Measurement with High Transient Immunity

The unique characteristics of an in-package magnetic current sensor eliminate many of the challenges faced by alternative solutions to measuring motor phase currents. The inherent galvanic isolation provides capability to withstand high voltage, and the high transient immunity of the output reduces output noise due to switching events. Current sensing implementations without this immunity require higher bandwidth in order to improve output glitch settling time; a magnetic sensor can use a lower-bandwidth signal chain without sacrificing transient immunity

DELL/HP/LENOVO EXHIBIT 1015
Page 50

Copyright © 2019, Texas Instruments Incorporated

performance. In-package magnetic current sensors also provide a reduction in total solution cost and design complexity due to no requirement for external resistive shunts, passive filtering, or isolated power supplies relative to the high voltage input.

For applications where phase current measurements provide over-current protection or diagnostics, the high transient rejection of a magnetic current sensor prevents false overcurrent indications due to output glitches. In motor systems where closed loop motor control algorithms are used, precise phase current measurements are needed in order to optimize motor performance. Historically, Hall-based current sensors have suffered from large temperature, lifetime, and hysteresis errors that degrade motor efficiency, dynamic response, and cause non-ideal errors such as torque ripple. Common system-level calibration techniques can improve accuracy at room temperature, but accounting for temperature drift in parameters, such as sensitivity and offset, is challenging.

Magnetic current sensing products from Texas Instruments improve system-level performance by incorporating patented linearization techniques and zero-drift architectures that provide stable, precise current measurements across temperature. A high-precision sensor tightly controls phase-to-phase current measurement errors, maintaining accurate feedback control and delivering a seamless user experience.

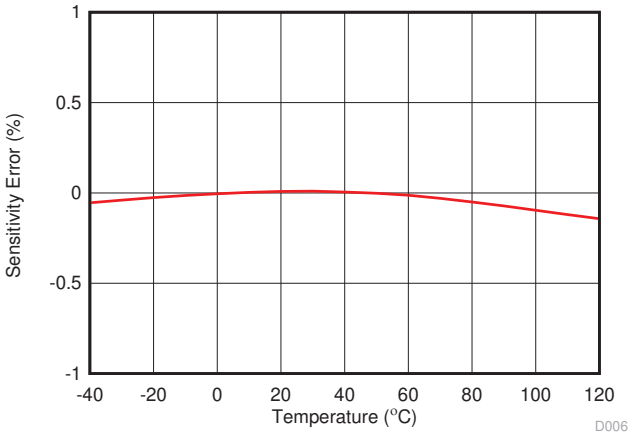

Figure 3. TMCS1100 Typical Sensitivity Error Across Temperature

The TMCS1100 features less than 0.3% typical sensitivity error at room temperature, and less than 0.85% maximum sensitivity error across the entire temperature range from –40°C to 125°C. This stability across temperature, shown in Figure 3, provides excellent phase-to-phase matching by minimizing the temperature drift of the sensor. In addition to high-sensitivity accuracy, the device has less than 2 mV of output offset drift, shown in Figure 4, which greatly improves measurement dynamic range, and allows for precise feedback control even at light loads.

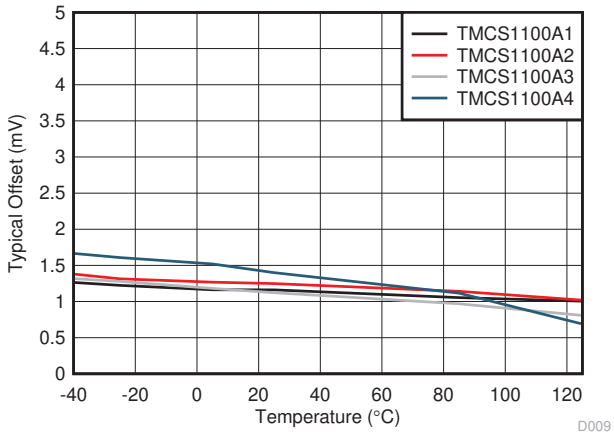

Figure 4. TMCS1100 Typical Output Offset Across Temperature

Combining high-sensitivity stability and a low offset results in an industry-leading isolated current sensing solution with <1% total error across the full temperature range of the device. A 600-V working voltage and 3 kV isolation barrier allows the device to fit into a wide array of high voltage systems. Combining measurement temperature stability, galvanic isolation, and transient PWM input rejection, the TMCS1100 is an ideal choice for PWM-driven applications, such as motor phase current measurements, where accurate and reliable measurements are required for precisely controlled performance.

Table 1. Alternate Device Recommendations

Device	Optimized Parameter	Performance Trade-Off
TMCS1101	Magnetic Current Sensor with Internal Reference	Lower precision, PSRR
AMC1300	Reinforced Isolation Shunt Amplifier	Solution size, complexity
INA240	Precision Shunt Amplifier with PWM Rejection	80V functional isolation
INA253	Precision Integrated-Shunt Amplifier with PWM Rejection	80V Functional isolation, size

Table 2. Related TI TechNotes

Lit #	Title
SBOA340	*Ratiometric Versus Non-Ratiometric Magnetic Signal Chains*
SBOA160	*Low-Drift, Precision, In-Line Motor Current Measurements With PWM Rejection*
SBOA161	*Low-Drift, Low-Side Current Measurements for Three-Phase Systems*
SBOA163	*High-Side Motor Current Monitoring for Over-Current Protection*

DELL/HP/LENOVO EXHIBIT 1015
Page 51

Copyright © 2019, Texas Instruments Incorporated

Application Brief

Current Sensing in Mobile Robots

Kyle Stone

Current Sensing

Introduction

Mobile robots are widely used in warehouse settings. These mobile robots help to increase efficiency within warehouses by moving quickly around a facility and collecting items that are needed to fulfill orders in a timely manner. By using these mobile robots, warehouse operators can have reduced overhead cost, a continuous faster output, and warehouses can potentially be organized in more efficient configurations, as these mobile robots can reach places humans cannot easily access.

Mobile robots start at their home base where robots are charged and are stored. When the robot is called upon, the robot can move around the warehouse to pick up the requested items, and bring those items to a desired location, where either a human or another robot such as industrial robot can take the items to an assembly line or shipping line. The mobile robot typically uses brushless DC motors to move. An accurate phase current sensing is critical in motor control. A poor current sensing can lead to large torque ripple, audible noise, and inefficiency. Figure 1 illustrates where current sensing plays a role in motor-drive applications.

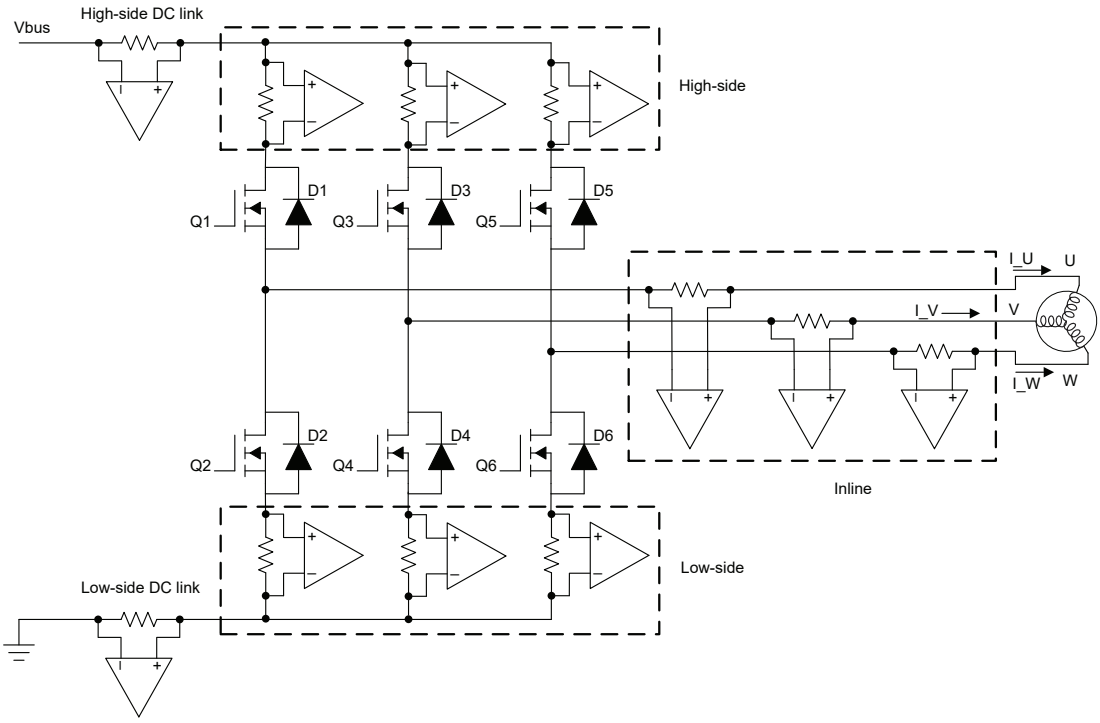

Figure 1. Methods of Motor Current Sensing in Mobile Robots

There are three methods of motor current sensing with their own positives and negatives as shown in Table 1. The best location to measure the motor current is directly inline with each phase due to continuity of signal measurement and direct correlation to the phase currents. In-line current sensing comes with the challenge where each motor phase is subjected to common-mode voltage transitions that can switch between large voltage levels over very short time periods. Current measurement in other locations, such as the low-side of each phase, requires recombination and processing before meaningful data can be utilized by the control

DELL/HP/LENOVO EXHIBIT 1015
Page 52

Copyright © 2022 Texas Instruments Incorporated

algorithm. INA241A is designed for in-line motor current sensing. INA241A offers high CMRR of 166 dB and enhanced PWM rejection allowing for minimal error at the output in switching systems.

Table 1. Current Sensing in an H-Bridge

Current Measurement	Positives	Negatives
High-side	Detect shorted load from battery for diagnostics	High voltage common-mode amplifier
Inline	Direct motor current measurement, low bandwidth amplifier	High dv/dt signals. PWM settling time.
Low-side	Low cost, low common-mode voltage	Unable to detect shorted load.

The mobile robots typically have onboard 48-V lithium-ion batteries, and can be charged wirelessly or wired. Charging currents and discharging currents can be monitored through Texas Instruments' line of digital power monitors such as the INA228 and INA238. The INA228 can monitor current, voltage, power, energy, or charge up to 85-V common-mode input range with 20-bit resolution through an I2C output. This allows for the robot to monitor the battery levels to the onboard computer. INA228 can monitor battery level and when the battery level runs low, the mobile robot can report back to the home base to be re-charged.

There are several other subsystems within the mobile robot, such as DC/DC converters, onboard computers, lighting systems, radars, and so forth, that can use current sensing. DC/DC converters can use current monitors in the system such as the INA296A to monitor the safe level of current and to make the system more efficient. The onboard computer is the brain of the mobile robot, and typically operates on a 5-V rail. The onboard computer can leverage current sensing with a digital power monitor such as the INA219, to monitor current and voltage into the system to report back health or power usage in the system. Current monitors can also be used to monitor various peripherals on the robot such as the lighting and radar systems.

Using current monitors can verify these subsystems are operating correctly for safely preventing an incident with a human or physical structure. Monitoring current through the peripheral systems can enable the system to detect a malfunction and can have the robot return to home base for maintenance. The INA281 or INA296A can be used to monitor the current flow in these peripherals. Figure 2 shows one possible way current sensing can be used in point-of-load (POL) applications where understanding the current going to a specific load in the system is important. This can be used for diagnostics, safety, and protection.

DELL/HP/LENOVO EXHIBIT 1015
Page 53

Copyright © 2022 Texas Instruments Incorporated

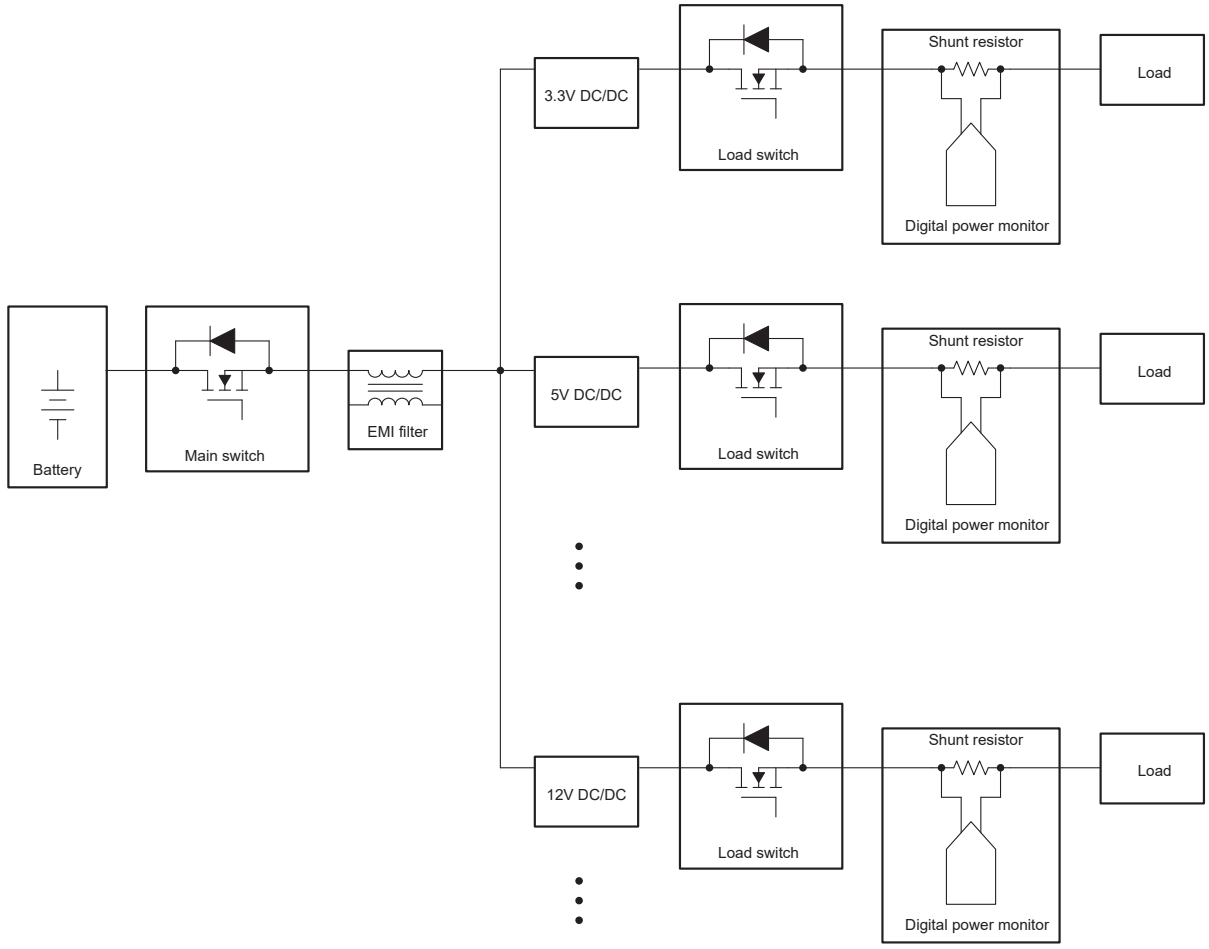

Figure 2. Power Monitoring at POL for Power System in Robotics

Conclusion

In conclusion, mobile robots are generally used in warehousing settings to reduce human involvement and speed up the movement of goods within the facility. Safety and efficiency are critical components of mobile robots. Leveraging various current-sensing techniques within the subsystems in motors, batteries, onboard computers, and peripheral systems can help these robots to operate safely and efficiently.

Alternate Device Recommendations

The INA241B is a high-precision, accurate analog current-sense amplifier. INA241B can be used in high-voltage bidirectional applications paired with 1.1-MHz bandwidth to offer fast response time with precise control for in-line control within H-bridge applications. The INA241B can measure currents at common-mode voltages of –5 V to 110 V and survive voltages between –20 V to 120 V, making the INA241B device an excellent choice for many systems.

The INA253 is an ultra-precise current-sense amplifier with an integrated low-inductive, precision 2-mΩ shunt with an accuracy of 0.1% and a temperature drift of < 15 ppm/°C. The INA253 is limited to applications that need < ±15 A of continuous current at T_A = 85°C. The INA253 integrated shunt is internally Kelvin-connected to the INA240 amplifier. The INA253 provides the performance benefits of the INA240 amplifier with the inclusion of a precision shunt providing a total uncalibrated system gain accuracy of < 0.2%.

The INA281 can be used in high-voltage applications such as high-side current sensing in a motor. The INA281 can measure currents at common-mode voltages of –4 V to 110 V and survive voltages between –20 V to 120 V, making the device versatile for a variety of applications where voltage can swing negative.

An option for low-side sensing is the INA381 which is a cost-optimized current-sense amplifier with an integrated comparator which serves to reduce PCB footprint size and simplifies design.

DELL/HP/LENOVO EXHIBIT 1015
Page 54

Copyright © 2022 Texas Instruments Incorporated

Table 2. Alternate Device Recommendations

Device	Optimized Parameter	Performance Trade-Off
INA241B	V_{cm} range: –5 V to 110 V Bidirectional	Slightly lower accuracy compared to INA241A
INA281	V_{cm} range: –4 V to 110 V	Unidirectional
INA381	Integrated Comparator	V_{cm} limited to 26 V
INA253	Integrated shunt 2 mΩ, V_{CM} range: –4 V to 80 V	±15-A maximum continuous current

Table 3. Related TI Application Briefs

Literature Number	Description
SBOA160	Low-Drift, Precision, In-Line Motor Current Measurements With PWM Rejection
SBOA176	Switching Power Supply Current Measurements
SBOA163	High-Side Current Overcurrent Protection Monitoring
SBOA555	Current Sensing in Collaborative and Industrial Robotic Arms

DELL/HP/LENOVO EXHIBIT 1015
Page 55

Copyright © 2022 Texas Instruments Incorporated

IMPORTANT NOTICE AND DISCLAIMER

TI PROVIDES TECHNICAL AND RELIABILITY DATA (INCLUDING DATA SHEETS), DESIGN RESOURCES (INCLUDING REFERENCE DESIGNS), APPLICATION OR OTHER DESIGN ADVICE, WEB TOOLS, SAFETY INFORMATION, AND OTHER RESOURCES “AS IS” AND WITH ALL FAULTS, AND DISCLAIMS ALL WARRANTIES, EXPRESS AND IMPLIED, INCLUDING WITHOUT LIMITATION ANY IMPLIED WARRANTIES OF MERCHANTABILITY, FITNESS FOR A PARTICULAR PURPOSE OR NON-INFRINGEMENT OF THIRD PARTY INTELLECTUAL PROPERTY RIGHTS.

These resources are intended for skilled developers designing with TI products. You are solely responsible for (1) selecting the appropriate TI products for your application, (2) designing, validating and testing your application, and (3) ensuring your application meets applicable standards, and any other safety, security, regulatory or other requirements.

These resources are subject to change without notice. TI grants you permission to use these resources only for development of an application that uses the TI products described in the resource. Other reproduction and display of these resources is prohibited. No license is granted to any other TI intellectual property right or to any third party intellectual property right. TI disclaims responsibility for, and you will fully indemnify TI and its representatives against, any claims, damages, costs, losses, and liabilities arising out of your use of these resources.

TI’s products are provided subject to TI’s Terms of Sale or other applicable terms available either on ti.com or provided in conjunction with such TI products. TI’s provision of these resources does not expand or otherwise alter TI’s applicable warranties or warranty disclaimers for TI products.

TI objects to and rejects any additional or different terms you may have proposed.

Mailing Address: Texas Instruments, Post Office Box 655303, Dallas, Texas 75265
Copyright © 2022, Texas Instruments Incorporated

Application Brief

Current Sensing in Collaborative and Industrial Robotic Arms

Kyle Stone, Guang Zhou, Sanjeev Manandhar

Current Sensing

Introduction

Collaborative robots and Industrial robots are the dominant robot technologies driving factories toward automation and increasing efficiency and throughput of the factories. Factories are able to build their end products at an ever-faster rate to meet the demand of the customers by implementing these semi- and full-factory automation technologies.

Collaborative Robots

Collaborative robots are human-assisted robots that typically work only with human interactions. These robots assist humans in lifting payloads in the range of 6 kg to 25 kg and greater to help reduce human fatigue, while increasing production speed. The collaborative robot is typically operating at voltages lower than 80 V, with most systems operating in the 48-V to 50-V range due to direct human interaction. These systems are sometimes isolated and requirements are based on the system design. Typical current ranges for these systems are between 10 A to 30 A depending on the circuit node. Current sensing in collaborative robots is typically used for motor control within the axis, where a device is monitoring the in-phase current of the electric motors as shown in Figure 1.

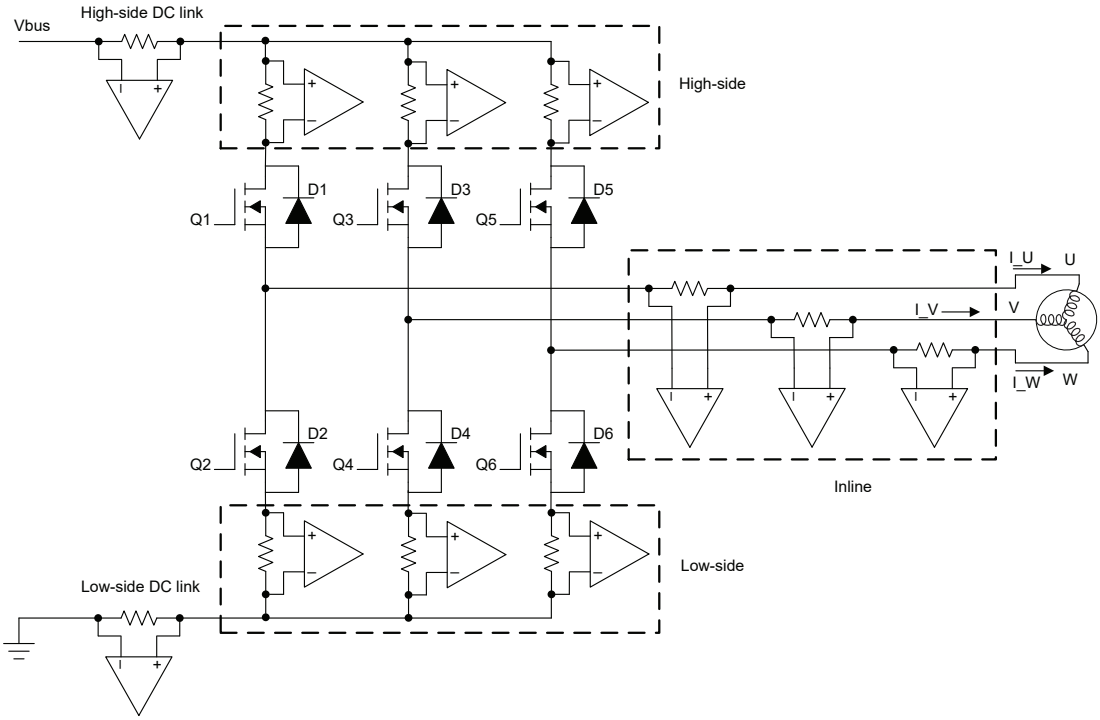

Figure 1. Methods of Motor Current Sensing in Collaborative and Industrial Robots

An accurate phase current sensing is critical in motor control. Poor current sensing can lead to large torque ripple, audible noise, and inefficiency. There are three methods of motor current sensing with their own positives

DELL/HP/LENOVO EXHIBIT 1015
Page 57

Copyright © 2022 Texas Instruments Incorporated

and negatives as shown in Table 1. The best location to measure the motor current is directly inline with each phase due to the continuity of signal measurement and direct correlation to the phase currents. In-line current sensing comes with the challenge where each motor phase is subjected to common-mode voltage transitions that can switch between large voltage levels over very short time periods. Current measurement in other locations, such as the low-side of each phase, requires recombination and processing before meaningful data can be utilized by the control algorithm.

Table 1. Current Sensing in an H-Bridge

Current Measurement	Advantages	Disadvantages
High-side	Detect shorted load from battery for diagnostics	High-voltage common-mode amplifier
Inline	Direct motor current measurement, low bandwidth amplifier	High dv/dt signals. PWM settling time.
Low-side	Low cost, low common-mode voltage	Unable to detect shorted load

Board space is highly constrained in collaborative robots, so a small-footprint device is desired. Since isolation is typically not a requirement, a device such an the INA241A is an excellent choice for an in-line current-sensing application because the INA241A offers high CMRR and enhanced PWM rejection allowing for minimal error in switching systems in a collaborative robot. The INA241A is packaged in a small SOT-23 (DDF) 8-pin package measuring 2.95 mm × 2.95 mm (8.70 mm^2) with the leads. If the application does require isolation, then a device such as the TMCS1108 (a Hall-effect current sensor), provides functional isolation up to 100 V.

Industrial Robots

Industrial robots are very large robots that are found in car factories and other manufacturing facilities where heavy lifting is required to pick and place large products. Industrial robots help bring a level of safety to a manufacturer because these robots are moving very large items without the need for human interaction, and can be done in a very controlled manner. The industrial robots typically operate in the AC domain with voltage levels between 400 V to 600 V, which are common AC voltage levels in large manufacturing facilities. The current levels generally range from 35 A to 250 A dependent upon what the robot is moving around the facility. Current sensing is typically done within a cabinet near the robot, so space is less of a concern in these systems. The current monitoring is usually done in-phase with the motors controlling the robot. Given the high-voltage present in industrial systems, isolation is generally required to separate the high-voltage levels that are dangerous to the low-voltage circuit systems and to humans. Today, current sensing is typically done with isolated amplifiers such as the AMC1306.

One other common place where current sensing is required in industrial robots is in the coil drive brake release unit. Coil drive is used for releasing the brake friction disks once the motor moving the joints has stopped or to provide dynamic stopping in an emergency event. The magnetic field in the coil drive keeps two spring-loaded friction disks away from each other so that rotor can turn freely. When flow of the current stops, the two braking friction disks are pressed against each other with the help of the loaded springs to stop the rotor. Figure 2 shows a low-side current sensing used in a coil drive in a brake release unit. Low-side current sensing gives more choices of current-sensing devices but due to the inductive nature of the coil, inputs of the current-sense amplifier can be subjected to negative voltage during switching. In such an event, a current-sensing device is required to survive the negative input voltage.

DELL/HP/LENOVO EXHIBIT 1015
Page 58

Copyright © 2022 Texas Instruments Incorporated

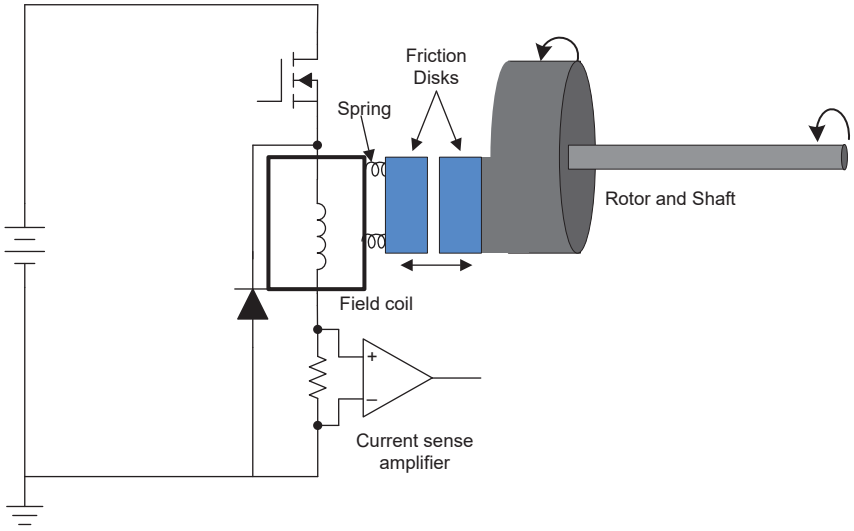

Figure 2. Low-Side Current Sensing in Coil Drive for Brake Release Unit

Conclusion

In conclusion, both collaborative and industrial robots generally both use current sensing to monitor the in-phase current of the electric motor in the various robots. The main differences are the need for isolation, the level of power, and the amount of weight the robot can lift, hence the difference in requirements for current-sensing devices. Industrial robots require current sensing in the coil drive to brake and stop motor. Collaborative robots generally do not need isolation, have power levels that do not exceed 2.0 kW, and typically lift payloads between 6 kg to 25 kg. While industrial robots generally do need isolation, their power levels that can range from as little as 3 kW up to and beyond 125 kW, and lift from 20 kg to a few thousand kilograms.

Alternate Device Recommendations

The INA241B is a high-precision, accurate analog current-sense amplifier. The INA241B can be used in high-voltage bidirectional applications paired with 1.1-MHz bandwidth to offer fast response times with precise control for in-line control within H-bridge applications. The INA241B can measure currents at common-mode voltages of –5 V to 110 V and survive voltages between –20 V to 120 V, making the INA241B an excellent choice for many systems.

The INA253 is an ultra-precise, current-sense amplifier with an integrated low inductive, precision 2-mΩ shunt with an accuracy of 0.1% and a temperature drift of < 15 ppm/°C. The INA253 is limited to applications that need < ±15 A of continuous current at T_A = 85 °C. The INA253 integrated shunt is internally Kelvin-connected to the INA240 amplifier. The INA253 provides the performance benefits of the INA240 amplifier with the inclusion of a precision shunt providing a total uncalibrated system gain accuracy of < 0.2%.

The INA281 can be used in high-voltage applications such as high-side current sensing in a motor. The INA281 can measure currents at common-mode voltages of –4 V to 110 V and survive voltages between –20 V to 120 V, making the INA281 versatile for a variety of applications where voltage can swing negative.

An option for low-side sensing is the INA381. This device is a cost-optimized current-sense amplifier with an integrated comparator which serves to reduce the PCB footprint size and simplify the design.

Table 2. Alternate Device Recommendations

Device	Optimized Parameter	Performance Trade-Off
INA241B	V_{cm} range: –5-V to 110-V Bidirectional	Slightly lower accuracy compared to INA241A
INA281	V_{cm} range: –4 V to 110 V	Unidirectional
INA381	Integrated Comparator	V_{cm} limited to 26 V
INA253	Integrated shunt 2 mΩ, V_{CM} range: –4 V to 80 V	±15-A maximum continuous current

DELL/HP/LENOVO EXHIBIT 1015
Page 59

Copyright © 2022 Texas Instruments Incorporated

Table 3. Related TI Application Briefs

Literature Number	Description
SBOA160	Low-Drift, Precision, In-Line Motor Current Measurements With PWM Rejection
SBOA176	Switching Power Supply Current Measurements
SBOA163	High-Side Current Overcurrent Protection Monitoring
SBOA554	Current Sensing in Mobile Robots

DELL/HP/LENOVO EXHIBIT 1015
Page 60

Copyright © 2022 Texas Instruments Incorporated

Application Brief

How to optimize PoE systems using discrete current sensing

Power over Ethernet (PoE) describes several standards that pass power along with data on twisted-pair Ethernet cabling. PoE allows a single cable to provide both data connection and power to devices such as wireless access points (WAPs), Internet Protocol (IP) cameras, and voice-over-Internet Protocol (VoIP) phones.

Power sourcing equipment (PSE) such as network switches or video recorders are used to power powered devices (PDs). However, many PDs have an auxiliary power connector for an optional external power supply, which often acts as backup power.

PoE offers several classes from one to eight, allowing input powers between 4W and 71W. Powered devices must be designed so that they do not exceed the PoE class specification chosen. If a powered device exceeds its PoE class limit, the PSE turns off the PD.

There are several methods to avoid PSE shutdown. One solution would be to characterize the load by measuring the maximum power consumption of every subsystem in the PD, and designing for a PoE class that is within that characterized peak power to guarantee that the powered device never exceeds the PoE class limit. However, this method is not ideal because it requires more characterization and the selection of an arbitrarily high PoE class.

Suppose designers chose not to characterize their systems for the highest possible power consumption and want to dynamically control system power consumption to stay within a lower PoE class limit, in this case, their circuit design would require current sensors.

Current sensors can monitor DC/DC converter current and report to an MCU or PMIC that controls the various subsystems within a PD, throttling power, and cycling functionality to avoid exceeding the PoE class limit.

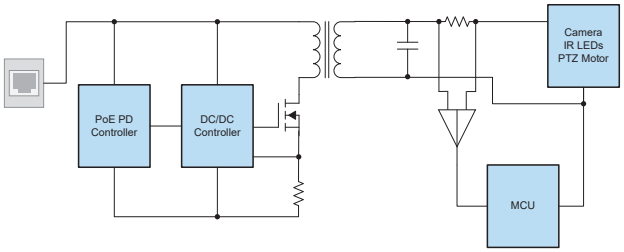

Figure 1. Current sensor in a PoE-powered device (IP camera)

Flyback converters are a common choice for DC/DC conversion in low-power applications like PDs due to their low cost and BOM count. These DC/DC converters reduce the voltage from 48 V to 12 V. Current sensors can be placed in several locations around the flyback transformer before the load. Measuring current on the primary and high-voltage side of the flyback offers the greatest accuracy as the power seen here includes losses in the DC/DC. However, designers must select a higher common-mode input range capable device like the INA238 to accommodate the 44-V to 57-V rail.

Low-side current sensing on the primary side offers diminished accuracy as this option does not include power losses in the transformer. Still, these current sensing devices (like the INA180) do not require high common-mode voltage capability. Current sensing on the secondary side of the transformer also allows designers to choose lower common-mode input voltage devices, but the sensor will not include power losses in the flyback converter. This leads to diminished current sensing accuracy because designers must estimate or characterize power losses in their DC/DC converter to know the power consumption of the entire PD.

The next selection is the technology of the current sensor. Digital power monitors like the INA219 can measure bus voltage and current, multiplying these to output a power calculation over I2C. Having power information means designers can more accurately and easily know how close the powered device is to the PoE class limit.

The second option is to use an analog-output current sense amplifier like the INA180 which will not give bus

DELL/HP/LENOVO EXHIBIT 1015
Page 61

Copyright © 2023 Texas Instruments Incorporated

voltage information, so if the rail voltage fluctuates, designers will not be able to know the total power consumption of the PD with as great accuracy.

Ultimately, this power or current information communicates to a microcontroller or SoC. This microcontroller or SoC is responsible for making decisions about turning off or throttling power and current to downstream electronic subsystems when current reaches too close to the class limit. So in an IP camera, for example, the MCU or SoC could turn off the pan-tilt-zoom (PTZ) motor, heater, or IR LEDs when power consumption gets too close to the class limit.

Current sensors can be used for other uses in powered devices. Specifically for IP cameras, subsystem current can be monitored. Often IP cameras are used outside in cold weather conditions and heaters must be implemented. Power is a leading indicator for temperature for resistive heating, therefore digital power monitors or current sense amplifiers can be used to actively control heating elements. Current sensing can also be used for safety and diagnostics in PTZ servo/stepper motors.

Additionally, IP cameras often have auxiliary power inputs in the form of 24 V_{ac} and 12V_{DC}coaxial inputs. Current sense amplifiers can be used with a FET in a simple e-fuse configuration on these input rails to monitor if current exceeds a threshold, triggering the FET and turning the device off to protect downstream electronics.

Related Documentation:

1. Texas Instruments, *Getting Started with Digital Power Monitors* application note
2. Texas Instruments, *Integrating the Current Sensing Signal Path* application brief

DELL/HP/LENOVO EXHIBIT 1015
Page 62

Copyright © 2023 Texas Instruments Incorporated

Additional resources

Current Sense Amplifier Overview

Explore TI's portfolio of current-sense amplifiers.

Current Sense Amplifier Comparison and Error Calculator

Compare up to five of TI's current-sense amplifiers and calculate the residual sum-of-squares error based on the devices selected and user-input system level parameters.

Power Monitor Tool

Input design constraints to determine the correct digital power monitor to use.

E2E is trademark of Texas Instruments.
All other trademarks are the property of their respective owners.

DELL/HP/LENOVO EXHIBIT 1015
Page 63

IMPORTANT NOTICE AND DISCLAIMER

TI PROVIDES TECHNICAL AND RELIABILITY DATA (INCLUDING DATA SHEETS), DESIGN RESOURCES (INCLUDING REFERENCE DESIGNS), APPLICATION OR OTHER DESIGN ADVICE, WEB TOOLS, SAFETY INFORMATION, AND OTHER RESOURCES “AS IS” AND WITH ALL FAULTS, AND DISCLAIMS ALL WARRANTIES, EXPRESS AND IMPLIED, INCLUDING WITHOUT LIMITATION ANY IMPLIED WARRANTIES OF MERCHANTABILITY, FITNESS FOR A PARTICULAR PURPOSE OR NON-INFRINGEMENT OF THIRD PARTY INTELLECTUAL PROPERTY RIGHTS.

These resources are intended for skilled developers designing with TI products. You are solely responsible for (1) selecting the appropriate TI products for your application, (2) designing, validating and testing your application, and (3) ensuring your application meets applicable standards, and any other safety, security, regulatory or other requirements.

These resources are subject to change without notice. TI grants you permission to use these resources only for development of an application that uses the TI products described in the resource. Other reproduction and display of these resources is prohibited. No license is granted to any other TI intellectual property right or to any third party intellectual property right. TI disclaims responsibility for, and you will fully indemnify TI and its representatives against, any claims, damages, costs, losses, and liabilities arising out of your use of these resources.

TI’s products are provided subject to TI’s Terms of Sale or other applicable terms available either on ti.com or provided in conjunction with such TI products. TI’s provision of these resources does not expand or otherwise alter TI’s applicable warranties or warranty disclaimers for TI products.

TI objects to and rejects any additional or different terms you may have proposed.

Mailing Address: Texas Instruments, Post Office Box 655303, Dallas, Texas 75265
Copyright © 2023, Texas Instruments Incorporated