Exhibit E-1

Invalidity of the ’712 Patent in View of U.S. Pat. App. Pub. No. 2006/0089230 A1 to Biederman et al. (Biederman)

This chart provides examples of where the prior art reference discloses, either expressly or inherently, the claim elements of asserted U.S. Patent No. 8,680,712 (“the ’712 patent”). The citations herein are exemplary and are not exhaustive; Defendant has cited the most relevant portions of the identified prior art. For each citation, Defendant hereby incorporates by reference the entire cited prior art reference, and reserves the right to rely on uncited portions of each identified prior art reference. To provide context or identify the state of the art at the time of the alleged invention, Defendant reserves the right to rely on: (1) uncited portions of the identified prior art; (2) other prior art not identified herein; (3) references that show the state of the art (irrespective of whether such references themselves qualify as prior art); (4) factual testimony from the inventors or authors of the prior art references, or purveyors of prior art devices; and (5) expert testimony.

Where Defendant cites a figure, the citation includes any text associated with the figure. Where Defendant cites passages relating to a figure, the citation includes the associated figure any other text associated with that figure. Where Defendant cites particular prior art as disclosing a claim element, that citation equally applies to all identical or similar claim elements in this chart. Defendant reserves the right to further assert that a claim element is inherent, the element would have been obvious to a person of ordinary skill in the art, or the element is disclosed in other prior art that may be combined with the cited prior art. To establish the inherency of certain features of the prior art to invalidate the asserted claims, Defendant may rely on cited or uncited portions of the prior art, other documents, factual testimony, and expert testimony.

This invalidity chart is based on information presently available to Defendant, and the information herein is provided as a non-limiting example.

Biederman was filed on October 7, 2004, and published on April 27, 2006; therefore, Biederman is prior art under at least 35 U.S.C. § 102(b).

Exhibit E-1

Claim Limitation		Biederman
Claim 1		
1[p]	A power delivery circuit configured to deliver power to one or more of a plurality of devices connected in a network, the power delivery circuit comprising:	To the extent the preamble is limiting, Biederman discloses this element and/or renders it obvious either alone or in combination with other references and/or the knowledge of one of ordinary skill in the art. *See, e.g.*: "Embodiments of the present invention described in the following detailed description are directed at bidirectional inline power." Biederman at [0030]. "In accordance with embodiments of the present invention, a networked device may have a data telecommunications port which may operate as a powered device (PD) under certain circumstances, may be off for power purposes under other circumstances and may operate as power Sourcing equipment (PSE) under yet other circumstances. The same port may be a PD at one time and PSE at another time, and, if desired, off at yet another time." Biederman at [0033]. "A first configuration 12 illustrates a shared MDI 14a having a switched PD functional block 15a shown in an on state and a switched PSE functional block 17a shown in an off state. These are coupled via cable 19a to a MDI 16 of a remote device configured as PSE. Alternately a second configuration 18 illustrates a shared MDI 14b having a switched PD functional block 15b shown in an off state and a switched PSE functional block 17b shown in an on state. These are coupled via cable 19b to a MDI 20 of a remote device configured as a PD." Biederman at [0034]. "FIG. 5 is an electrical schematic diagram of a bidirectional inline power port configuration 54 in accordance with an embodiment of the present invention. In this embodiment a first functional block 56 representing the data portion of a port 61 of a first network device 57 is coupled to first MDI 45a, and from first MDI 45a over (in this instance) two pairs of wires 32 and 34 to a second MDI 45b, and from there to a second functional block 58 representing the data portion of a port 63 of a second network device 59. In this instance port 61 may be configured as PD or PSE and port 63 may be configured as PD just as port 37 in FIG. 4. Port 61 includes a PD block 60 and a DC/DC converter block 62 just like port 37 of FIG. 4. In this case, however, switches (or other equivalent switching equipment such as diodes, transistors, relays and the like as will now be apparent to those of ordinary skill in the art) are provided to enable either the PD or the PSE (or neither or both) modes at port 61. Switching circuitry 64 selectively couples PD block 60 to first MDI 45a.

		Similarly, switching circuitry 66 selectively couples PSE block 68 (and power supply block 70) under control of controller 72 to first MDI 45a. Controller 72 or another controller (see discussion above) may monitor conditions such as a state of charge of a battery or availability of power received through PD block 60, or the like, to determine the state of switching circuitry 64 and 66 and hence the mode of operation of port 61. It is also possible and within the inventive concepts herein described to control the state of switching circuitry 64 and 66 directly in a conventional manner such as switches, hubs and the like are managed, e.g., by commands transmitted over the data communications network from a command center." Biederman at [0038]. "FIG. 6 is an electrical schematic diagram of a configuration 74 of a bidirectional inline power port in which a port 76 of a first device is shown coupled for communication over cable pairs 32 and 34. An integrated PSE/PD block 78 coupled to receive power (when available) from power supply block 80 (which may be a conventional grid-powered or battery-powered power supply). Controller 82 controls operation of PSE/PD block 78 in response to monitored (or commanded) conditions as discussed above. In a first mode PSE/PD block 78 operates as a PSE. In a second mode PSE/PD block 78 operates as a PD. In a third optional mode PSE/PD block 78 may be turned off so that no inline power is passed and in a fourth optional mode PSE/PD block 78 may be set to be both PSE and PD." Biederman at [0039]. "Turning now to FIG. SA, FIG. SA is a block diagram of a portion 84 of a data communications network comprising a number of network devices 86, 88, 90, 92, 94 and 96. Each of the network devices has at least one port for carrying out data telecommunications and/or inline power transmission. Device 86 has at least first port 98. Device 88 has at least second and third ports 100 and 102. Device 90 has at least fourth and fifth ports 104 and 106. Device 92 has at least sixth and seventh ports 108 and 110. Device 94 has at least eighth and ninth ports 112 and 114 and device 96 has at least tenth port 116. Note that at least network devices 86 and 96 could be the same device and/or may have uplink(s) to another network such as an intranet, the internet, and the like." Biederman at [0043].

Exhibit E-1

		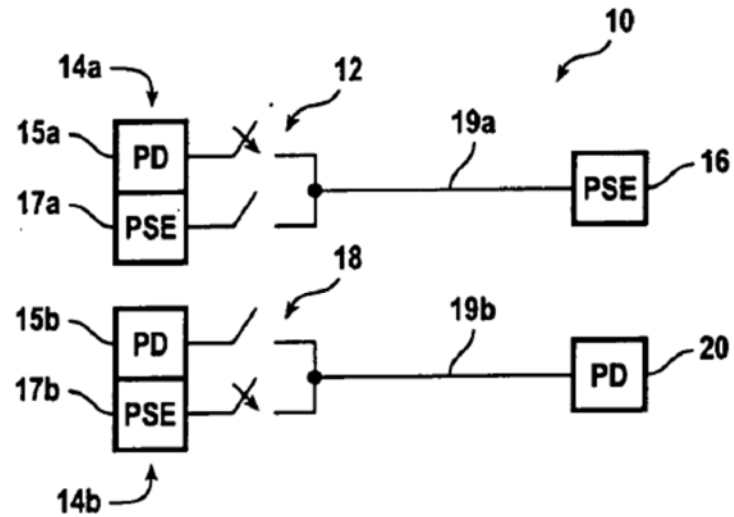 FIG. 2 Biederman at Fig. 2.

Exhibit E-1

		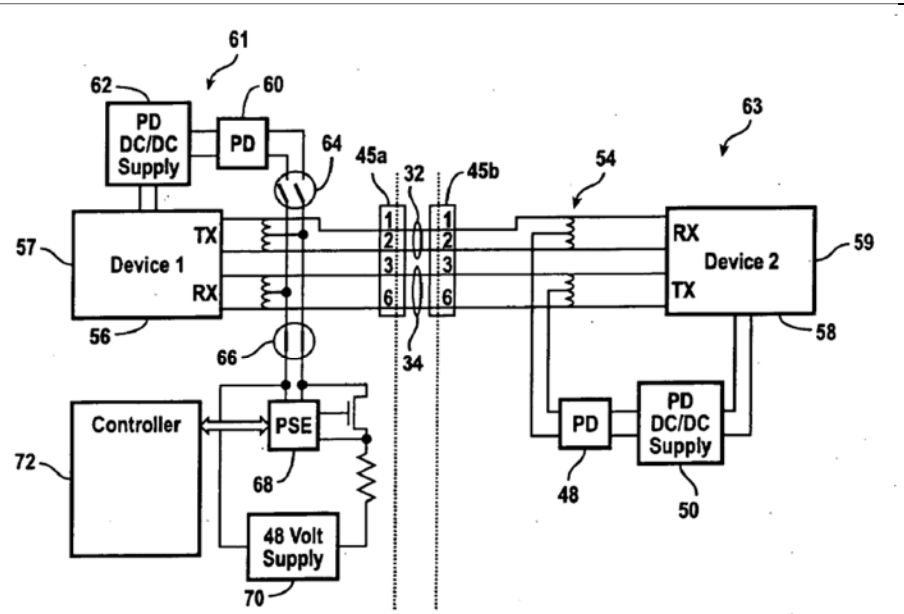 FIG. 5 Biederman at Fig. 5.

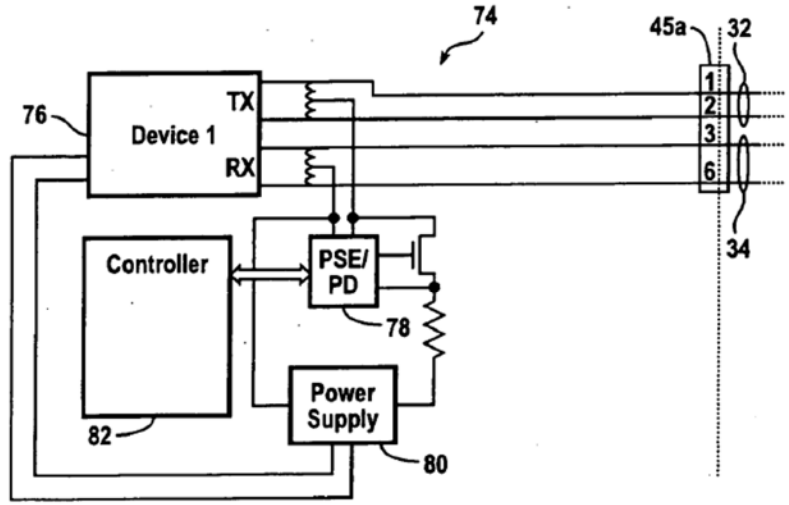

FIG. 6

Biederman at Fig. 6.

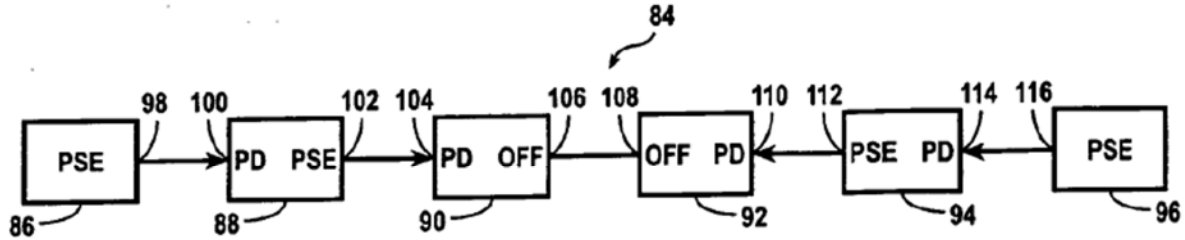

FIG. 8A

Biederman at Fig. 8A.

To the extent that Plaintiff contends that Biederman does not explicitly or inherently disclose this element, or render obvious this element, this element is obvious in combination with one or more

		references and/or with the knowledge of a person of ordinary skill in the art, as set forth in Defendant's Invalidity Contentions.
1(a)	a voltage source configured to generate a voltage;	Biederman discloses and/or renders obvious this limitation. *See, e.g.*: "A first configuration 12 illustrates a shared MDI 14a having a switched PD functional block 15a shown in an on state and a switched PSE functional block 17a shown in an off state. These are coupled via cable 19a to a MDI 16 of a remote device configured as PSE. Alternately a second configuration 18 illustrates a shared MDI 14b having a switched PD functional block 15b shown in an off state and a switched PSE functional block 17b shown in an on state. These are coupled via cable 19b to a MDI 20 of a remote device configured as a PD." Biederman at [0034]. "FIG. 5 is an electrical schematic diagram of a bidirectional inline power port configuration 54 in accordance with an embodiment of the present invention. In this embodiment a first functional block 56 representing the data portion of a port 61 of a first network device 57 is coupled to first MDI 45a, and from first MDI 45a over (in this instance) two pairs of wires 32 and 34 to a second MDI 45b, and from there to a second functional block 58 representing the data portion of a port 63 of a second network device 59. In this instance port 61 may be configured as PD or PSE and port 63 may be configured as PD just as port 37 in FIG. 4. Port 61 includes a PD block 60 and a DC/DC converter block 62 just like port 37 of FIG. 4. In this case, however, switches (or other equivalent switching equipment such as diodes, transistors, relays and the like as will now be apparent to those of ordinary skill in the art) are provided to enable either the PD or the PSE (or neither or both) modes at port 61. Switching circuitry 64 selectively couples PD block 60 to first MDI 45a. Similarly, switching circuitry 66 selectively couples PSE block 68 (and power supply block 70) under control of controller 72 to first MDI 45a. Controller 72 or another controller (see discussion above) may monitor conditions such as a state of charge of a battery or availability of power received through PD block 60, or the like, to determine the state of switching circuitry 64 and 66 and hence the mode of operation of port 61. It is also possible and within the inventive concepts herein described to control the state of switching circuitry 64 and 66 directly in a conventional manner such as switches, hubs and the like are managed, e.g., by commands transmitted over the data communications network from a command center." Biederman at [0038].

Exhibit E-1

		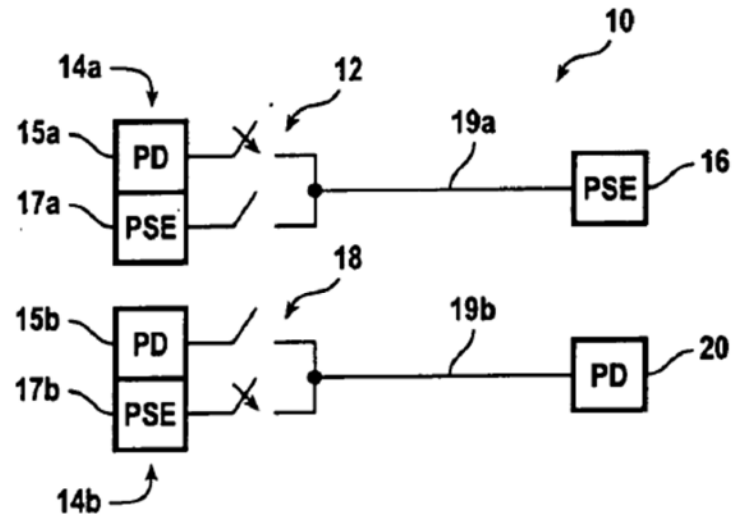 FIG. 2 Biederman at Fig. 2.

		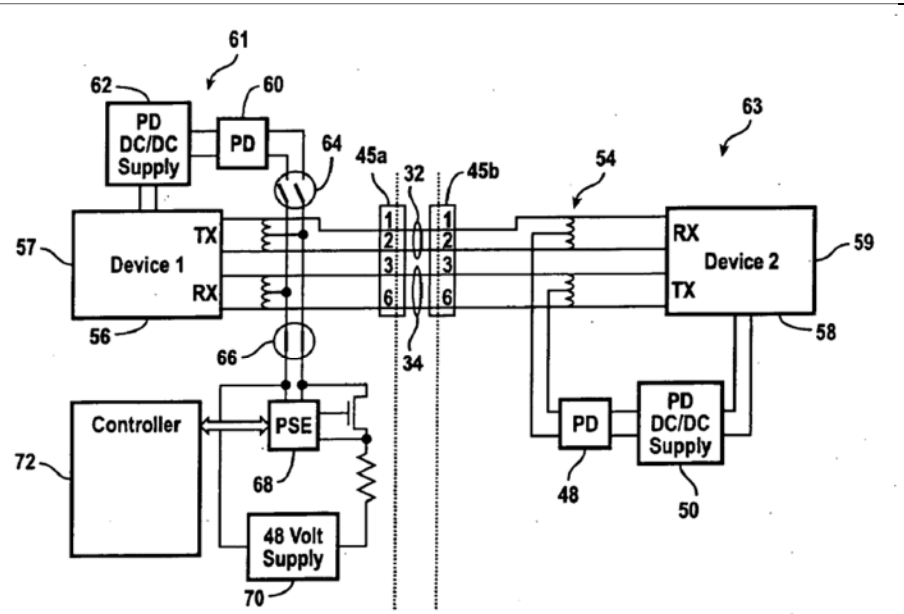 FIG. 5 Biederman at Fig. 5.

		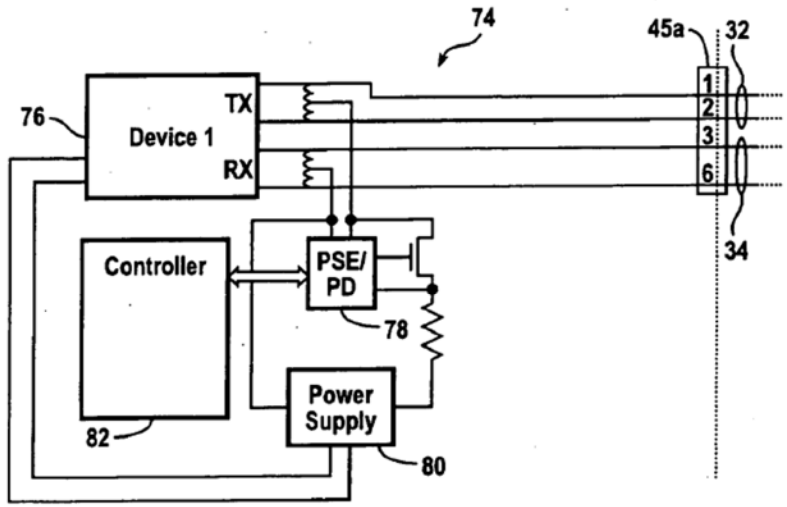 *FIG. 6* Biederman at Fig. 6. To the extent that Plaintiff contends that Biederman does not explicitly or inherently disclose this element, or render obvious this element, this element is obvious in combination with one or more references and/or with the knowledge of a person of ordinary skill in the art, as set forth in Defendant's Invalidity Contentions.
1(b)	a power relay switch configured to relay, when closed, the voltage generated by the voltage source to one or more of the connected devices;	Biederman discloses and/or renders obvious this limitation. *See, e.g.*: "A first configuration 12 illustrates a shared MDI 14a having a switched PD functional block 15a shown in an on state and a switched PSE functional block 17a shown in an off state. These are coupled via cable 19a to a MDI 16 of a remote device configured as PSE. Alternately a second configuration 18 illustrates a shared MDI 14b having a switched PD functional block 15b shown in an off state and a switched PSE functional block 17b shown in an on state. These are coupled via cable 19b to a MDI 20 of a remote device configured as a PD." Biederman at [0034].

		"FIG. 5 is an electrical schematic diagram of a bidirectional inline power port configuration 54 in accordance with an embodiment of the present invention. In this embodiment a first functional block 56 representing the data portion of a port 61 of a first network device 57 is coupled to first MDI 45a, and from first MDI 45a over (in this instance) two pairs of wires 32 and 34 to a second MDI 45b, and from there to a second functional block 58 representing the data portion of a port 63 of a second network device 59. In this instance port 61 may be configured as PD or PSE and port 63 may be configured as PD just as port 37 in FIG. 4. Port 61 includes a PD block 60 and a DC/DC converter block 62 just like port 37 of FIG. 4. In this case, however, Switches (or other equivalent Switching equipment Such as diodes, transistors, relays and the like as will now be apparent to those of ordinary skill in the art) are provided to enable either the PD or the PSE (or neither or both) modes at port 61. Switching circuitry 64 selectively couples PD block 60 to first MDI 45a. Similarly, switching circuitry 66 selectively couples PSE block 68 (and power supply block 70) under control of controller 72 to first MDI 45a. Controller 72 or another controller (see discussion above) may monitor conditions such as a state of charge of a battery or availability of power received through PD block 60, or the like, to determine the state of switching circuitry 64 and 66 and hence the mode of operation of port 61. It is also possible and within the inventive concepts herein described to control the state of switching circuitry 64 and 66 directly in a conventional manner Such as Switches, hubs and the like are managed, e.g., by commands transmitted over the data communications network from a command center." Biederman at [0038]. "FIG. 6 is an electrical schematic diagram of a configuration 74 of a bidirectional inline power port in which a port 76 of a first device is shown coupled for communication over cable pairs 32 and 34. An integrated PSE/PD block 78 coupled to receive power (when available) from power supply block 80 (which may be a conventional grid-powered or battery-powered power supply). Controller 82 controls operation of PSE/PD block 78 in response to monitored (or commanded) conditions as discussed above. In a first mode PSE/PD block 78 operates as a PSE. In a second mode PSE/PD block 78 operates as a PD. In a third optional mode PSE/PD block 78 may be turned off so that no inline power is passed and in a fourth optional mode PSE/PD block 78 may be set to be both PSE and PD." Biederman at [0039].

Exhibit E-1

		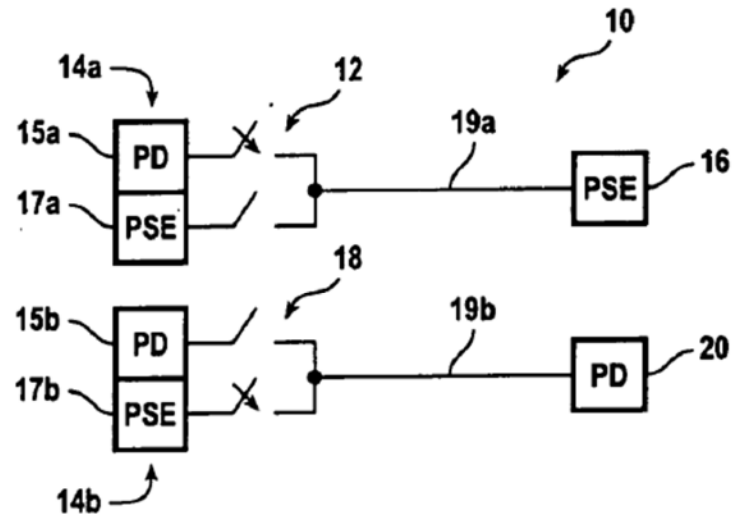 FIG. 2 Biederman at Fig. 2.

Exhibit E-1

		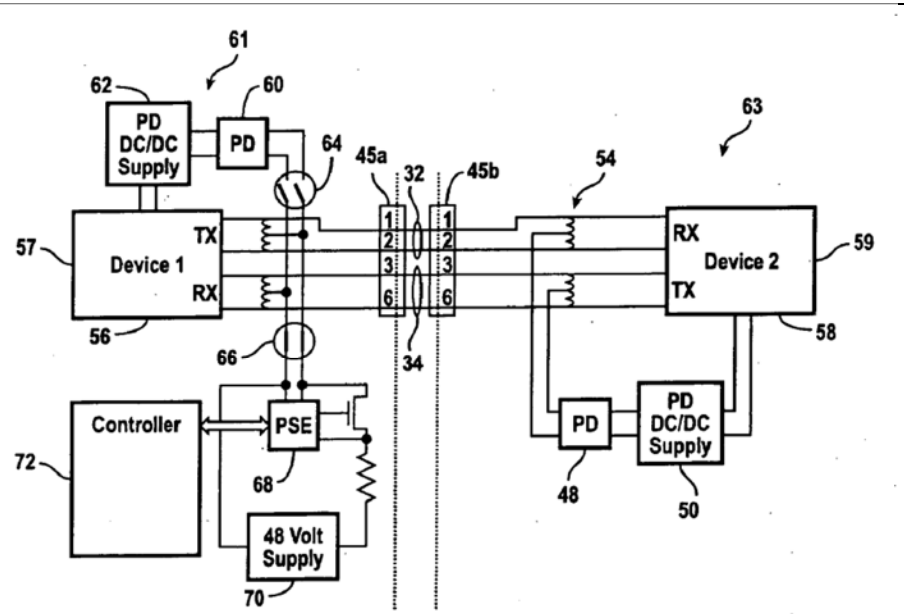 FIG. 5 Biederman at Fig. 5.

		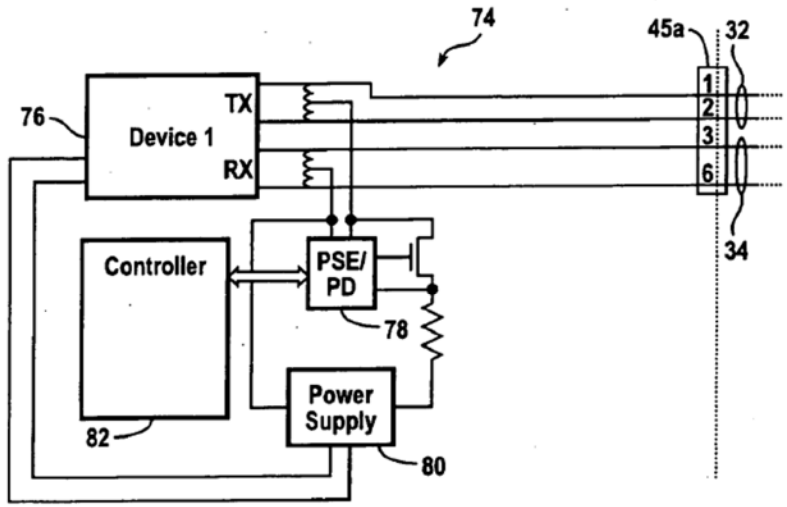 FIG. 6 Biederman at Fig. 6. To the extent that Plaintiff contends that Biederman does not explicitly or inherently disclose this element, or render obvious this element, this element is obvious in combination with one or more references and/or with the knowledge of a person of ordinary skill in the art, as set forth in Defendant's Invalidity Contentions.
1(c)	a signature resistor connected to the switch and configured to detect a power source from one or more of the connected devices; and	Biederman discloses and/or renders obvious this limitation. *See, e.g.*: "FIG. 7 is a flow diagram illustrating operation of the bidirectional inline power port in deciding which mode of operation to assert. This program of instructions is executable by a machine and is illustrated in conventional pseudo-code similar to that used, for example, in the specification for IEEE 802.3af referred to above. It may now easily be implemented by those of ordinary skill in the art having the benefit of this disclosure in either hardware, software or firmware. In FIG. 7 the state PSE_MODE contains the IEEE 802.3af state machine for a PSE. The state PD_MODE contains the IEEE 802.3af state machine for a PD, with the state NOT_REQUESTING_POWER pulled out to

		show in this FIG. 7. The state is pulled out so that a new condition may be added (tpd_timer_done)." Biederman at [0040]. "Within the INACTIVE state the system determines the needs for: PD, PSE, none and (if desired) PSE+PD operation. (While the PSE+PD mode of operation (switches 64 and 66 closed) represents a mode where the interface is, in effect, supplying power to itself and is an unlikely occurrence, it is still possible and might be desirable under certain circumstances and is thus described herein-in such a case it is desirable to provide switches which may be opened when appropriate to prevent power from being inserted onto the cable pairs-these could be located at the center-taps of the coupling transformers (not shown in FIG. 5)-or a separate path from the PSE to the PD-so that the cable does not have power on it when a remote device has not requested it). If power can be supplied by the device, the path to PSE_MODE is traversed. If power is required, then the path to PD_MODE is traversed. A different timer is used in each path to exit the path when the timer expires and no progress has been made entering the mode of operation attempted. This results in the INACTIVE state being entered where system needs are checked and prioritized before one of the modes is attempted again. The system is capable of manipulating the IEEE 802.3af variables to change the behavior of the IEEE 802.3af state machines." Biederman at [0041]. "The state of the port may also be managed by direct commands transmitted over the wired data communications network (or by other conventional means such as wireless) as from a conventional graphical user interface (GUI) or a command line interface (CLI) as are conventionally used to manage components of data communications networks. It is also possible to configure software to manage the state decision in response to various conditions as will now be apparent to those of ordinary skill in the art. It should be noted that the power requirements of a PD may change from time to time depending upon how it is used, or other time dependent operation of the device. As a result, it would be desirable to adjust the power delivered to the PD from time to time to meet these new requirements, either by increasing the power delivered or decreasing it, as appropriate. A number of mechanisms are provided by the present invention to accomplish this. First, the controller may direct a PSE block (see, e.g., FIG. 5) to reenter the INACTIVE state periodically to thereby reassess power demands and allocate power accordingly. Second, low bandwidth data communications may be established between a PSE and an attached PD so that the PD may communicate directly to the PSE its instantaneous power demands and the PSE may respond accordingly. Those of ordinary skill in the art will now realize that a number of known

		communications mechanisms may be used to modulate a data communication signal over the connecting cable, through the respective MD Is and between the PD and PSE without disrupting existing communications over the link. For example, a pulse-type communications signal could be transmitted between the PD and PSE to communicate current power requirements of the PD and/or power availability at the PSE to the PD. Third, in a similar fashion, the PD and PSE may establish communications over the data communications network to a control center, master controller or the like and tell it their respective power availabilities and power needs. In response the controller may command adjustments in provided power and/or desired power to the PSE or PD, respectively. Those of ordinary skill in the art will now realize that other equivalent mechanisms are available to periodically revise the amount of power made available by the PSE to the PD." Biederman at [0042]. "There are mechanisms within the IEEE 802.3af standard to allocate a requested amount of power." Biederman at [0014].

		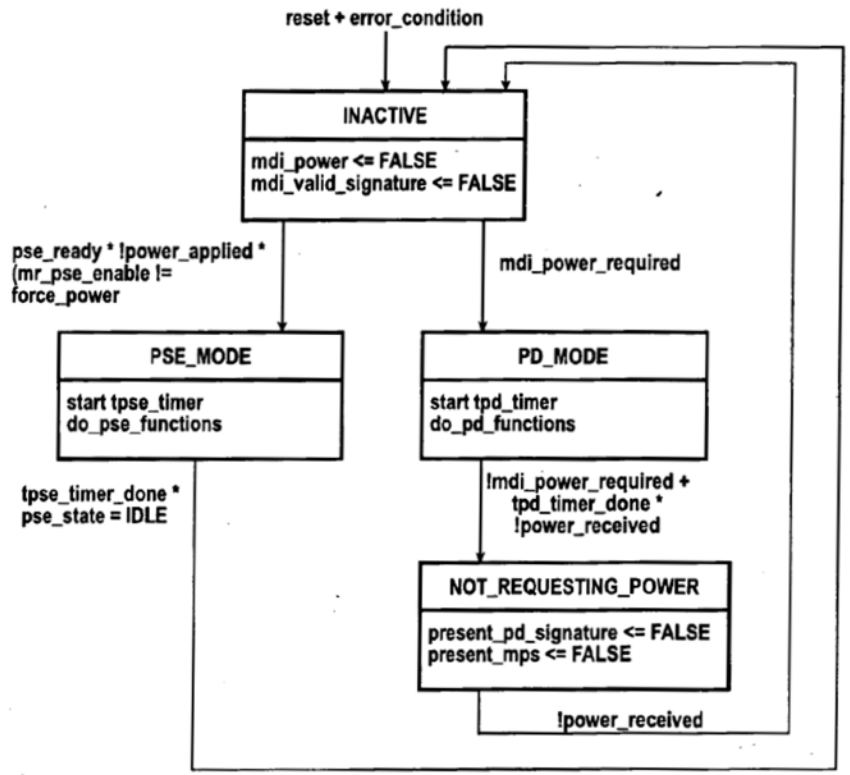 *FIG. 7* Biederman at Fig. 7. To the extent that Plaintiff contends that Biederman does not explicitly or inherently disclose this element, or render obvious this element, this element is obvious in combination with one or more references and/or with the knowledge of a person of ordinary skill in the art, as set forth in Defendant's Invalidity Contentions.
1(d)	a load detector connected to the switch and configured to read a load	Biederman discloses and/or renders obvious this limitation. *See, e.g.*:

	current flowing therethrough so as to detect a load in one of the connected devices, and to extract information about the connected device based on the load current;	"Controller 72 or another controller (see discussion above) may monitor conditions such as a state of charge of a battery or availability of power received through PD block 60, or the like, to determine the state of switching circuitry 64 and 66 and hence the mode of operation of port 61." Biederman at [0038]. "Accordingly, a bidirectional inline power port at a fixed location or associated with a portable computing device may be configured to source power (PSE mode) or sink power (PD mode) depending upon the conditions presented. For example, a portable computing device at home, at work or onboard a transportation vehicle with an available PSE port may configure itself to operate in PD mode so as to charge its battery or obtain power for other purposes. When disconnected, the portable computing device may respond to a request for power from another attached PD and thereby change a configuration of its data telecommunications port from PD to PSE in order to provide power to the attached PD (such as a telephone, cell phone, PDA, or the like)." Biederman at [0035]. "Controller 82 controls operation of PSE/PD block 78 in response to monitored (or commanded) conditions as discussed above. In a first mode PSE/PD block 78 operates as a PSE. In a second mode PSE/PD block 78 operates as a PD. In a third optional mode PSE/PD block 78 may be turned off so that no inline power is passed and in a fourth optional mode PSE/PD block 78 may be set to be both PSE and PD." Biederman at [0039] "FIG. 7 is a flow diagram illustrating operation of the bidirectional inline power port in deciding which mode of operation to assert. This program of instructions is executable by a machine and is illustrated in conventional pseudo-code similar to that used, for example, in the speci-fication for IEEE 802.3af referred to above. It may now easily be implemented by those of ordinary skill in the art having the benefit of this disclosure in either hardware, software or firmware. In FIG. 7 the state PSE_MODE contains the IEEE 802.3af state machine for a PSE. The state PD_MODE contains the IEEE 802.3af state machine for a PD, with the state NOT_REQUESTING_POWER pulled out to show in this FIG. 7. The state is pulled out so that a new condition may be added (tpd_timer_done)." Biederman at [0040]. "Within the INACTIVE state the system determines the needs for: PD, PSE, none and (if desired) PSE+PD operation. (While the PSE+PD mode of operation (switches 64 and 66 closed) represents

		a mode where the interface is, in effect, supplying power to itself and is an unlikely occurrence, it is still possible and might be desirable under certain circumstances and is thus described herein-in such a case it is desirable to provide switches which may be opened when appropriate to prevent power from being inserted onto the cable pairs-these could be located at the center-taps of the coupling transformers (not shown in FIG. 5)-or a separate path from the PSE to the PD-so that the cable does not have power on it when a remote device has not requested it). If power can be supplied by the device, the path to PSE_MODE is traversed. If power is required, then the path to PD_MODE is traversed. A different timer is used in each path to exit the path when the timer expires and no progress has been made entering the mode of operation attempted. This results in the INACTIVE state being entered where system needs are checked and prioritized before one of the modes is attempted again. The system is capable of manipulating the IEEE 802.3af variables to change the behavior of the IEEE 802.3af state machines." Biederman at [0041]. "The state of the port may also be managed by direct commands transmitted over the wired data communications network (or by other conventional means such as wireless) as from a conventional graphical user interface (GUI) or a command line interface (CLI) as are conventionally used to manage components of data communications networks. It is also possible to configure software to manage the state decision in response to various conditions as will now be apparent to those of ordinary skill in the art. It should be noted that the power requirements of a PD may change from time to time depending upon how it is used, or other time dependent operation of the device. As a result, it would be desirable to adjust the power delivered to the PD from time to time to meet these new requirements, either by increasing the power delivered or decreasing it, as appropriate. A number of mechanisms are provided by the present inven-tion to accomplish this. First, the controller may direct a PSE block (see, e.g., FIG. 5) to reenter the INACTIVE state periodically to thereby reassess power demands and allocate power accordingly. Second, low bandwidth data communi-cations may be established between a PSE and an attached PD so that the PD may communicate directly to the PSE its instantaneous power demands and the PSE may respond accordingly. Those of ordinary skill in the art will now realize that a number of known communications mecha-nisms may be used to modulate a data communication signal over the connecting cable, through the respective MD Is and between the PD and PSE without disrupting existing com-munications over the link. For example, a pulse-type com-munications signal could be transmitted between the PD and PSE to communicate current power requirements of the PD and/or power availability at the PSE to the PD. Third, in a similar fashion, the PD and PSE may

		establish communi-cations over the data communications network to a control center, master controller or the like and tell it their respective power availabilities and power needs. In response the con-troller may command adjustments in provided power and/or desired power to the PSE or PD, respectively. Those of ordinary skill in the art will now realize that other equivalent mechanisms are available to periodically revise the amount of power made available by the PSE to the PD." Biederman at [0042]. "There are mechanisms within the IEEE 802.3af standard to allocate a requested amount of power." Biederman at [0014]. 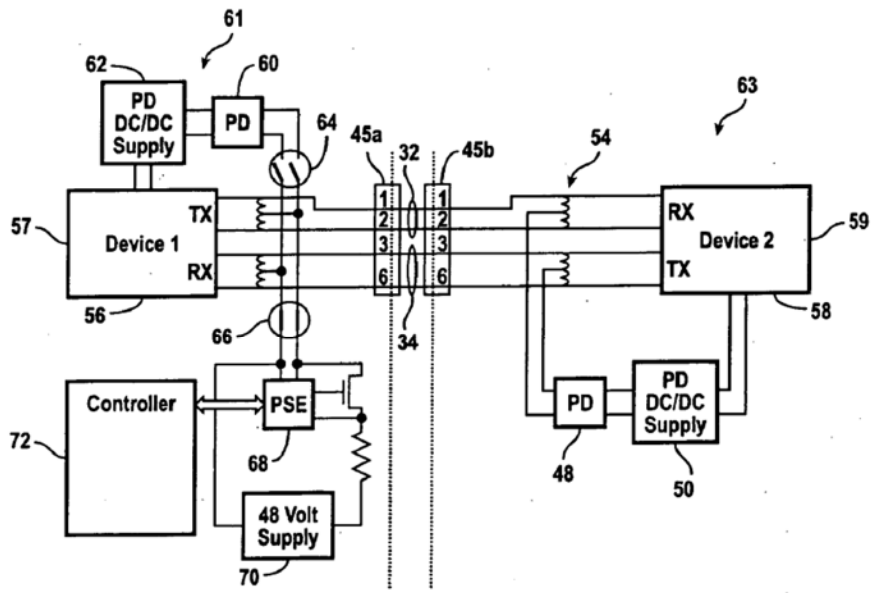 *FIG. 5* Biederman at Fig. 5.

Exhibit E-1

		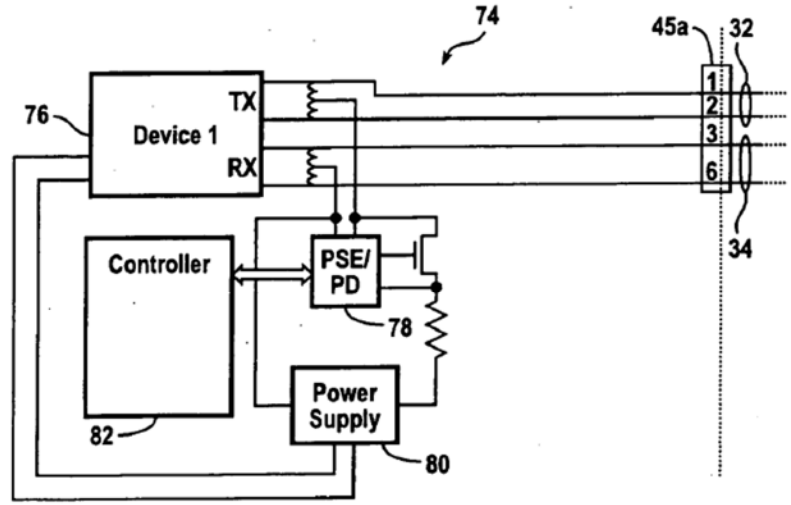 FIG. 6 Biederman at Fig. 6.

		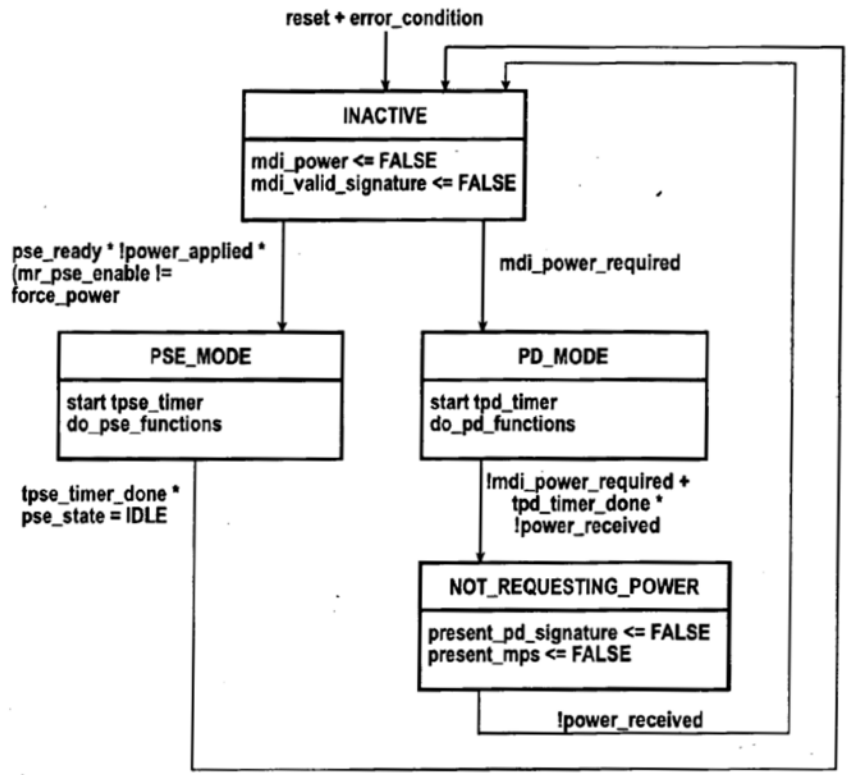 *FIG. 7* Biederman at Fig. 7. To the extent that Plaintiff contends that Biederman does not explicitly or inherently disclose this element, or render obvious this element, this element is obvious in combination with one or more references and/or with the knowledge of a person of ordinary skill in the art, as set forth in Defendant's Invalidity Contentions.
1(e)	wherein the information extracted by the load detector comprises	Biederman discloses and/or renders obvious this limitation. *See, e.g.*:

	information regarding whether the connected device is powered on or powered off, and whether or not the connected device needs a supply of power.	"Controller 72 or another controller (see discussion above) may monitor conditions such as a state of charge of a battery or availability of power received through PD block 60, or the like, to determine the state of switching circuitry 64 and 66 and hence the mode of operation of port 61." Biederman at [0038]. "Accordingly, a bidirectional inline power port at a fixed location or associated with a portable computing device may be configured to source power (PSE mode) or sink power (PD mode) depending upon the conditions presented. For example, a portable computing device at home, at work or onboard a transportation vehicle with an available PSE port may configure itself to operate in PD mode so as to charge its battery or obtain power for other purposes. When disconnected, the portable computing device may respond to a request for power from another attached PD and thereby change a configuration of its data telecommunications port from PD to PSE in order to provide power to the attached PD (such as a telephone, cell phone, PDA, or the like)." Biederman at [0035]. "FIG. 7 is a flow diagram illustrating operation of the bidirectional inline power port in deciding which mode of operation to assert. This program of instructions is executable by a machine and is illustrated in conventional pseudo-code similar to that used, for example, in the speci-fication for IEEE 802.3af referred to above. It may now easily be implemented by those of ordinary skill in the art having the benefit of this disclosure in either hardware, software or firmware. In FIG. 7 the state PSE_MODE contains the IEEE 802.3af state machine for a PSE. The state PD_MODE contains the IEEE 802.3af state machine for a PD, with the state NOT_REQUESTING_POWER pulled out to show in this FIG. 7. The state is pulled out so that a new condition may be added (tpd_timer_done)." Biederman at [0040]. "Within the INACTIVE state the system determines the needs for: PD, PSE, none and (if desired) PSE+PD operation. (While the PSE+PD mode of operation (switches 64 and 66 closed) represents a mode where the interface is, in effect, supplying power to itself and is an unlikely occurrence, it is still possible and might be desirable under certain circumstances and is thus described herein-in such a case it is desirable to provide switches which may be opened when appropriate to prevent power from being inserted onto the cable pairs-these could be located at the center-taps of the coupling transformers (not shown in FIG. 5)-or a separate path from the PSE to the PD-so that the cable does not have power on it when a remote device has not requested it). If power can be supplied

		by the device, the path to PSE_MODE is traversed. If power is required, then the path to PD_MODE is traversed. A different timer is used in each path to exit the path when the timer expires and no progress has been made entering the mode of operation attempted. This results in the INACTIVE state being entered where system needs are checked and prioritized before one of the modes is attempted again. The system is capable of manipulating the IEEE 802.3af variables to change the behavior of the IEEE 802.3af state machines." Biederman at [0041]. "The state of the port may also be managed by direct commands transmitted over the wired data communications network (or by other conventional means such as wireless) as from a conventional graphical user interface (GUI) or a command line interface (CLI) as are conventionally used to manage components of data communications networks. It is also possible to configure software to manage the state decision in response to various conditions as will now be apparent to those of ordinary skill in the art. It should be noted that the power requirements of a PD may change from time to time depending upon how it is used, or other time dependent operation of the device. As a result, it would be desirable to adjust the power delivered to the PD from time to time to meet these new requirements, either by increasing the power delivered or decreasing it, as appropriate. A number of mechanisms are provided by the present inven-tion to accomplish this. First, the controller may direct a PSE block (see, e.g., FIG. 5) to reenter the INACTIVE state periodically to thereby reassess power demands and allocate power accordingly. Second, low bandwidth data communi-cations may be established between a PSE and an attached PD so that the PD may communicate directly to the PSE its instantaneous power demands and the PSE may respond accordingly. Those of ordinary skill in the art will now realize that a number of known communications mechanisms may be used to modulate a data communication signal over the connecting cable, through the respective MD Is and between the PD and PSE without disrupting existing com-munications over the link. For example, a pulse-type communications signal could be transmitted between the PD and PSE to communicate current power requirements of the PD and/or power availability at the PSE to the PD. Third, in a similar fashion, the PD and PSE may establish communications over the data communications network to a control center, master controller or the like and tell it their respective power availabilities and power needs. In response the controller may command adjustments in provided power and/or desired power to the PSE or PD, respectively. Those of ordinary skill in the art will now realize that other equivalent mechanisms are available to periodically revise the amount of power made available by the PSE to the PD." Biederman at [0042].

		"There are mechanisms within the IEEE 802.3af standard to allocate a requested amount of power." Biederman at [0014]. "Controller 82 controls operation of PSE/PD block 78 in response to monitored (or commanded) conditions as discussed above. In a first mode PSE/PD block 78 operates as a PSE. In a second mode PSE/PD block 78 operates as a PD. In a third optional mode PSE/PD block 78 may be turned off so that no inline power is passed and in a fourth optional mode PSE/PD block 78 may be set to be both PSE and PD." Biederman at [0039] "The State PD MODE contains the IEEE 802.3af state machine for a PD, with the state NOT REQUESTING POWER pulled out to show in this FIG. 7. The state is pulled out so that a new condition may be added (tpd timer done)." Biederman at [0040] "If power is required, then the path to PD MODE is traversed." Biederman at [0042]

		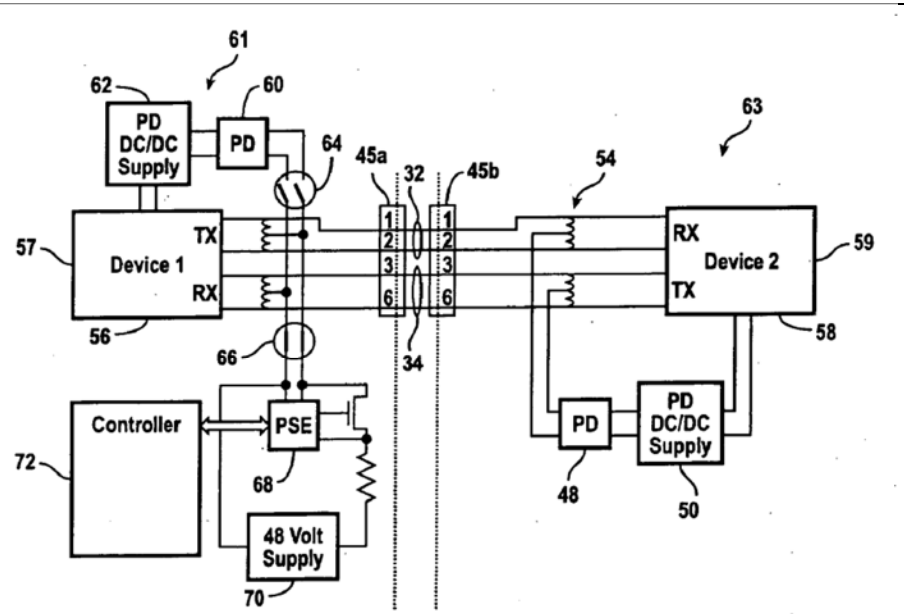 FIG. 5 Biederman at Fig. 5.

Exhibit E-1

		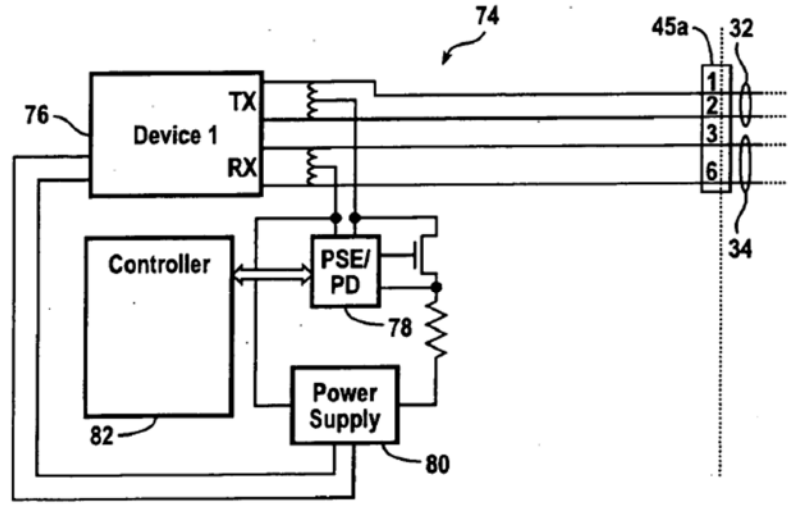 FIG. 6 Biederman at Fig. 6.

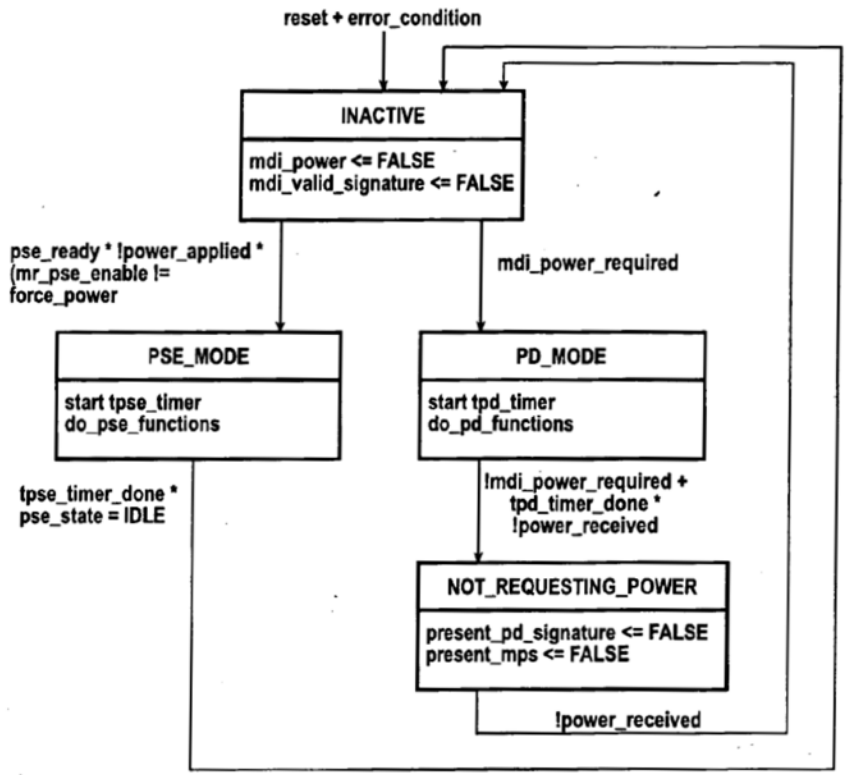

FIG. 7

Biederman at Fig. 7.

To the extent that Plaintiff contends that Biederman does not explicitly or inherently disclose this element, or render obvious this element, this element is obvious in combination with one or more references and/or with the knowledge of a person of ordinary skill in the art, as set forth in Defendant's Invalidity Contentions.

Claim 5		
5	The power delivery circuit of claim 1, wherein the load detector is further configured to detect removal of one of the plurality of devices from the network.	Biederman discloses and/or renders obvious this limitation. *See, e.g.*: "Turning now to FIG. 8B we see that the cabling has been cut or disrupted in some fashion between port 102 and port 104. In this case, since port 104 can no longer receive inline power from port 102, it has been reconfigured so that inline power is off. (Note that the PD/PSE functions of ports may be configured as required by the controller. For example, in this case port 102 might not be set to off if it still required power from a PSE and it was configured to "look" like a PD.) Port 106 which had been off in FIG. 8A is now reconfigured to receive power in PD mode. Port 108 which had been off is now reconfigured in response to the demand from port 106 in PD mode so that it is now in PSE mode. The balance of the network inline power ports remain unchanged. In this manner a single severed network connection will not necessarily result in inline powered equipment being forced to shut down. Similarly, the Ethernet connections may still reach all connected network devices and conventional network protocols such as the well-known Spanning Tree Protocol (STP) and the like will adapt the network to the new cabling configuration." Biederman at [0045]. 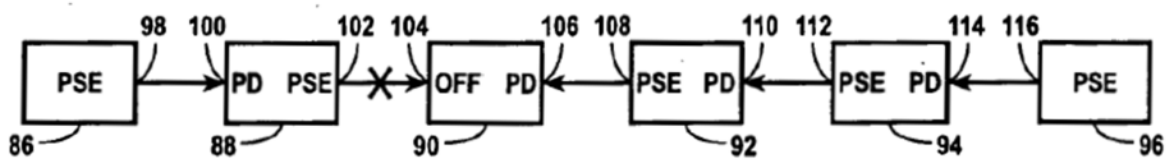 FIG. 8B Biederman at Fig. 8B. To the extent that Plaintiff contends that Biederman does not explicitly or inherently disclose this element, or render obvious this element, this element is obvious in combination with one or more references and/or with the knowledge of a person of ordinary skill in the art, as set forth in Defendant's Invalidity Contentions.
Claim 7		

7[p]	A method of delivering power to one of a plurality of devices connected in a daisy chain, the method comprising:	To the extent the preamble is limiting, Biederman discloses this element and/or renders it obvious either alone or in combination with other references and/or the knowledge of one of ordinary skill in the art. *See, e.g.*: "Embodiments of the present invention described in the following detailed description are directed at bidirectional inline power." Biederman at [0030]. "In accordance with embodiments of the present invention, a networked device may have a data telecommunications port which may operate as a powered device (PD) under certain circumstances, may be off for power purposes under other circumstances and may operate as power Sourcing equipment (PSE) under yet other circumstances. The same port may be a PD at one time and PSE at another time, and, if desired, off at yet another time." Biederman at [0033]. "A first configuration 12 illustrates a shared MDI 14a having a switched PD functional block 15a shown in an on state and a switched PSE functional block 17a shown in an off state. These are coupled via cable 19a to a MDI 16 of a remote device configured as PSE. Alternately a second configuration 18 illustrates a shared MDI 14b having a switched PD functional block 15b shown in an off state and a switched PSE functional block 17b shown in an on state. These are coupled via cable 19b to a MDI 20 of a remote device configured as a PD." Biederman at [0034]. "FIG. 5 is an electrical schematic diagram of a bidirectional inline power port configuration 54 in accordance with an embodiment of the present invention. In this embodiment a first functional block 56 representing the data portion of a port 61 of a first network device 57 is coupled to first MDI 45a, and from first MDI 45a over (in this instance) two pairs of wires 32 and 34 to a second MDI 45b, and from there to a second functional block 58 representing the data portion of a port 63 of a second network device 59. In this instance port 61 may be configured as PD or PSE and port 63 may be configured as PD just as port 37 in FIG. 4. Port 61 includes a PD block 60 and a DC/DC converter block 62 just like port 37 of FIG. 4. In this case, however, switches (or other equivalent switching equipment such as diodes, transistors, relays and the like as will now be apparent to those of ordinary skill in the art) are provided to enable either the PD or the PSE (or neither or both) modes at port 61. Switching circuitry 64 selectively couples PD block 60 to first MDI 45a. Similarly, switching circuitry 66 selectively couples PSE block 68 (and power supply block 70) under control of controller 72 to first MDI 45a. Controller 72 or another controller (see discussion

		above) may monitor conditions such as a state of charge of a battery or availability of power received through PD block 60, or the like, to determine the state of switching circuitry 64 and 66 and hence the mode of operation of port 61. It is also possible and within the inventive concepts herein described to control the state of switching circuitry 64 and 66 directly in a conventional manner such as switches, hubs and the like are managed, e.g., by commands transmitted over the data communications network from a command center." Biederman at [0038]. "FIG. 6 is an electrical schematic diagram of a configuration 74 of a bidirectional inline power port in which a port 76 of a first device is shown coupled for communication over cable pairs 32 and 34. An integrated PSE/PD block 78 coupled to receive power (when available) from power supply block 80 (which may be a conventional grid-powered or battery-powered power supply). Controller 82 controls operation of PSE/PD block 78 in response to monitored (or commanded) conditions as discussed above. In a first mode PSE/PD block 78 operates as a PSE. In a second mode PSE/PD block 78 operates as a PD. In a third optional mode PSE/PD block 78 may be turned off so that no inline power is passed and in a fourth optional mode PSE/PD block 78 may be set to be both PSE and PD." Biederman at [0039]. "Turning now to FIG. SA, FIG. SA is a block diagram of a portion 84 of a data communications network comprising a number of network devices 86, 88, 90, 92, 94 and 96. Each of the network devices has at least one port for carrying out data telecommunications and/or inline power transmission. Device 86 has at least first port 98. Device 88 has at least second and third ports 100 and 102. Device 90 has at least fourth and fifth ports 104 and 106. Device 92 has at least sixth and seventh ports 108 and 110. Device 94 has at least eighth and ninth ports 112 and 114 and device 96 has at least tenth port 116. Note that at least network devices 86 and 96 could be the same device and/or may have uplink(s) to another network such as an intranet, the internet, and the like." Biederman at [0043]. "FIG. 7 is a flow diagram illustrating operation of the bidirectional inline power port in deciding which mode of operation to assert. This program of instructions is executable by a machine and is illustrated in conventional pseudo-code similar to that used, for example, in the speci-fication for IEEE 802.3af referred to above. It may now easily be implemented by those of ordinary skill in the art having the benefit of this disclosure in either hardware, software or firmware. In FIG. 7 the state PSE_MODE contains the IEEE 802.3af state machine for a PSE. The state PD_MODE contains the

		IEEE 802.3af state machine for a PD, with the state NOT_REQUESTING_POWER pulled out to show in this FIG. 7. The state is pulled out so that a new condition may be added (tpd_timer_done)." Biederman at [0040]. "Within the INACTIVE state the system determines the needs for: PD, PSE, none and (if desired) PSE+PD operation. (While the PSE+PD mode of operation (switches 64 and 66 closed) represents a mode where the interface is, in effect, supplying power to itself and is an unlikely occurrence, it is still possible and might be desirable under certain circumstances and is thus described herein-in such a case it is desirable to provide switches which may be opened when appropriate to prevent power from being inserted onto the cable pairs-these could be located at the center-taps of the coupling transformers (not shown in FIG. 5)-or a separate path from the PSE to the PD-so that the cable does not have power on it when a remote device has not requested it). If power can be supplied by the device, the path to PSE_MODE is traversed. If power is required, then the path to PD_MODE is traversed. A different timer is used in each path to exit the path when the timer expires and no progress has been made entering the mode of operation attempted. This results in the INACTIVE state being entered where system needs are checked and prioritized before one of the modes is attempted again. The system is capable of manipulating the IEEE 802.3af variables to change the behavior of the IEEE 802.3af state machines." Biederman at [0041]. "The state of the port may also be managed by direct commands transmitted over the wired data communications network (or by other conventional means such as wireless) as from a conventional graphical user interface (GUI) or a command line interface (CLI) as are conventionally used to manage components of data communications networks. It is also possible to configure software to manage the state decision in response to various conditions as will now be apparent to those of ordinary skill in the art. It should be noted that the power requirements of a PD may change from time to time depending upon how it is used, or other time dependent operation of the device. As a result, it would be desirable to adjust the power delivered to the PD from time to time to meet these new requirements, either by increasing the power delivered or decreasing it, as appropriate. A number of mechanisms are provided by the present inven-tion to accomplish this. First, the controller may direct a PSE block (see, e.g., FIG. 5) to reenter the INACTIVE state periodically to thereby reassess power demands and allocate power accordingly. Second, low bandwidth data communi-cations may be established between a PSE and an attached PD so that the PD may communicate directly to the PSE its instantaneous power demands and the PSE may respond

		accordingly. Those of ordinary skill in the art will now realize that a number of known communications mecha-nisms may be used to modulate a data communication signal over the connecting cable, through the respective MD Is and between the PD and PSE without disrupting existing com-munications over the link. For example, a pulse-type communications signal could be transmitted between the PD and PSE to communicate current power requirements of the PD and/or power availability at the PSE to the PD. Third, in a similar fashion, the PD and PSE may establish communications over the data communications network to a control center, master controller or the like and tell it their respective power availabilities and power needs. In response the con-troller may command adjustments in provided power and/or desired power to the PSE or PD, respectively. Those of ordinary skill in the art will now realize that other equivalent mechanisms are available to periodically revise the amount of power made available by the PSE to the PD." Biederman at [0042]. 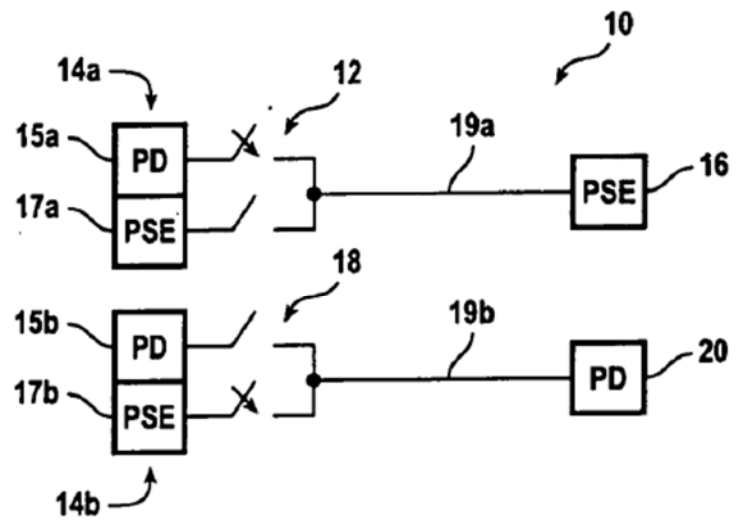 FIG. 2 Biederman at Fig. 2.

		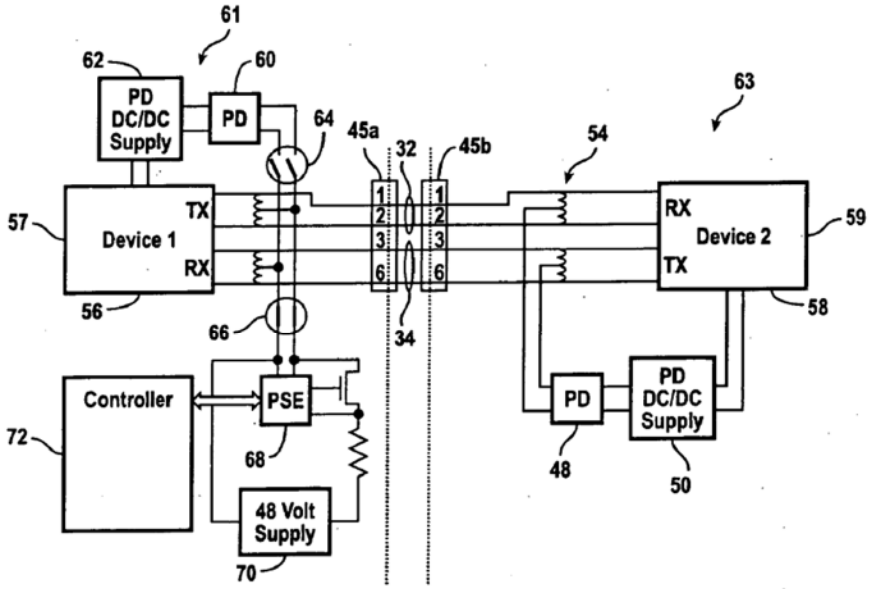 FIG. 5 Biederman at Fig. 5.

Exhibit E-1

		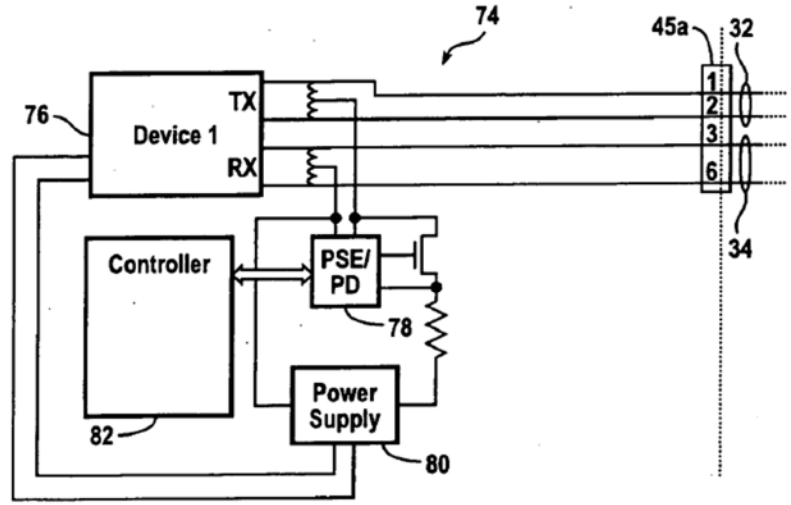 FIG. 6 Biederman at Fig. 6.

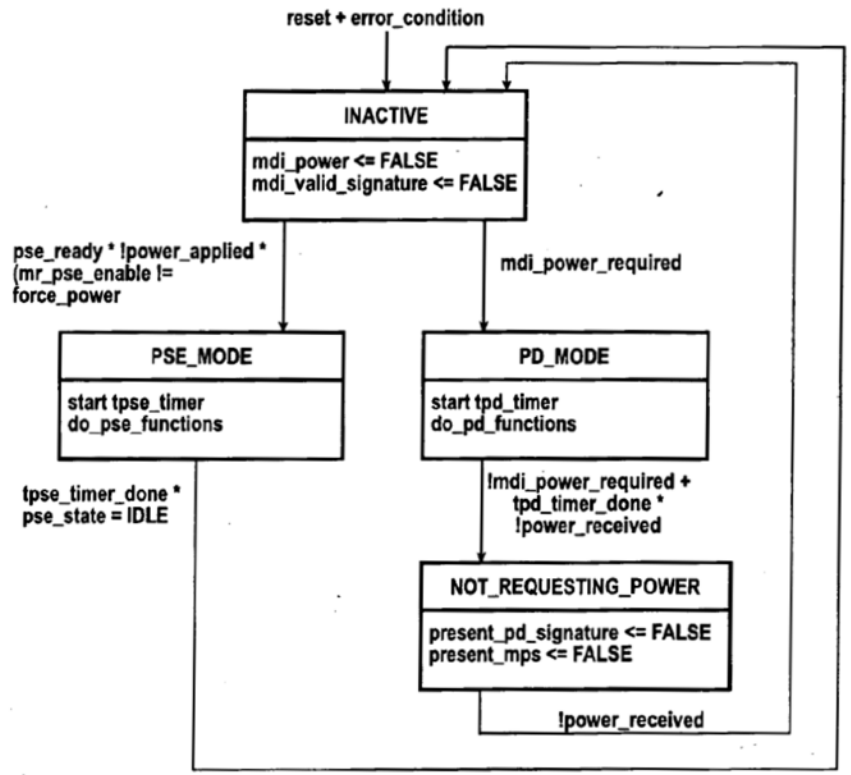

FIG. 7

Biederman at Fig. 7.

		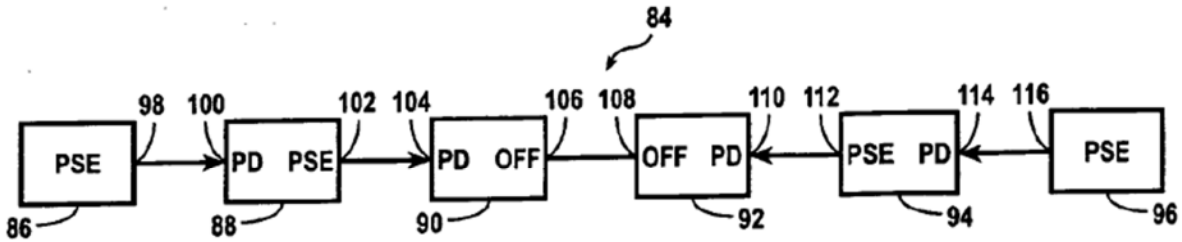 FIG. 8A Biederman at Fig. 8A. To the extent that Plaintiff contends that Biederman does not explicitly or inherently disclose this element, or render obvious this element, this element is obvious in combination with one or more references and/or with the knowledge of a person of ordinary skill in the art, as set forth in Defendant's Invalidity Contentions.
7(a)	detecting a load in a first device of the plurality of devices including detecting a load current flowing through the load;	Biederman discloses and/or renders obvious this limitation. *See* exemplary disclosures and corresponding discussion for claim element 1(d).
7(b)	extracting information from the first device based on the detected load current; and	Biederman discloses and/or renders obvious this limitation. *See* exemplary disclosures and corresponding discussion for claim element 1(d).
7(c)	relaying power to the first device based on the extracted information;	Biederman discloses and/or renders obvious this limitation. *See, e.g.*: "Controller 72 or another controller (see discussion above) may monitor conditions such as a state of charge of a battery or availability of power received through PD block 60, or the like, to determine the state of switching circuitry 64 and 66 and hence the mode of operation of port 61." Biederman at [0038].

		"Accordingly, a bidirectional inline power port at a fixed location or associated with a portable computing device may be configured to source power (PSE mode) or sink power (PD mode) depending upon the conditions presented. For example, a portable computing device at home, at work or onboard a transportation vehicle with an available PSE port may configure itself to operate in PD mode so as to charge its battery or obtain power for other purposes. When disconnected, the portable computing device may respond to a request for power from another attached PD and thereby change a configuration of its data telecommunications port from PD to PSE in order to provide power to the attached PD (such as a telephone, cell phone, PDA, or the like)." Biederman at [0035]. "3. The method of claim 1, further comprising: determining if a remote device to which the cable is also coupled is a powered device; determining if the local device is in a mode to provide power; and configuring the local device to provide power over the cable to the remote device in response to determining that the local device is in a mode to provide power and the remote device is a powered device." Biederman at cl. 3. "9. The method of claim 4, further comprising: detecting a change in the amount of power desired by the remote device; and adjusting the amount of power provided in response to detecting the change in the amount of power desired by the remote device." Biederman at cl. 9. "14. The apparatus of claim 12, further comprising: means for determining if a remote device to which the cable is also coupled is a powered device; means for determining if the local device is in a mode to provide power, and means for configuring the local device to provide power over the cable to the remote device in response to determining that the local device is in a mode to provide power and the remote device is a powered device." Biederman at cl. 14. "24. The system of claim 23, wherein the controller is further operable to: determine an amount of power desired by the remote device; and provide an amount of power to the remote device responsive to determining the amount of power desired by the remote device." Biederman at cl. 24.

		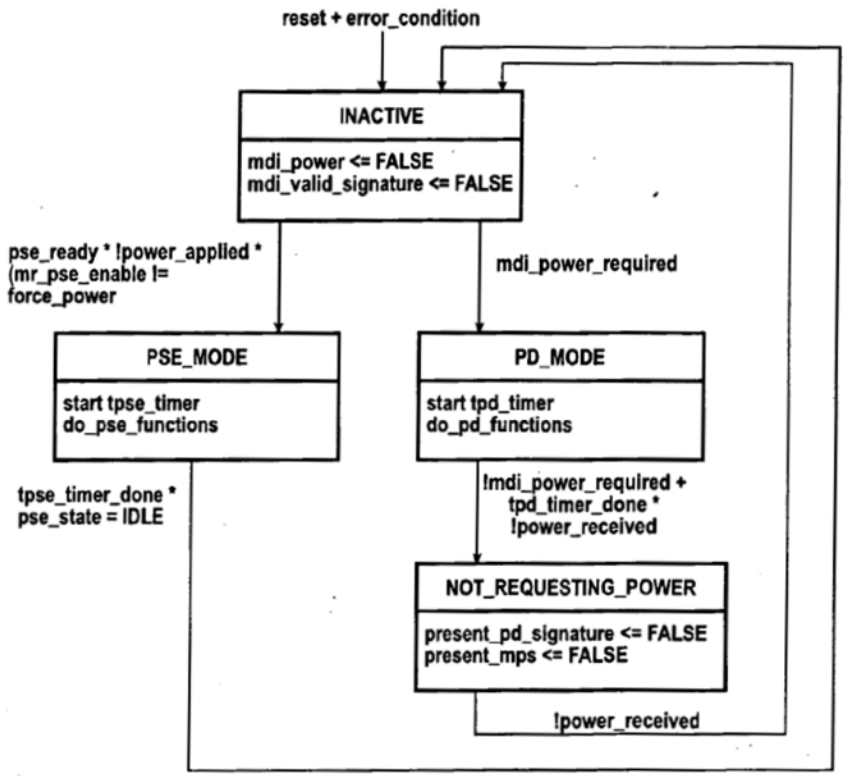 *FIG. 7* Biederman at Fig. 7. To the extent that Plaintiff contends that Biederman does not explicitly or inherently disclose this element, or render obvious this element, this element is obvious in combination with one or more references and/or with the knowledge of a person of ordinary skill in the art, as set forth in Defendant's Invalidity Contentions.
7(d)	wherein the information extracted comprises information regarding	Biederman discloses and/or renders obvious this limitation. *See* exemplary disclosures and corresponding discussion for claim element 1(e).

	whether the first device is powered on or powered off, and whether or not the first device needs a supply of power.	

Exhibit E-2

Invalidity of the ’712 Patent in View of U.S. Pat. App. Pub. No. 2006/0100799 A1 to Karam (Karam ’799)

This chart provides examples of where the prior art reference discloses, either expressly or inherently, the claim elements of asserted U.S. Patent No. 8,680,712 (“the ’712 patent”). The citations herein are exemplary and are not exhaustive; Defendant has cited the most relevant portions of the identified prior art. For each citation, Defendant hereby incorporates by reference the entire cited prior art reference, and reserves the right to rely on uncited portions of each identified prior art reference. To provide context or identify the state of the art at the time of the alleged invention, Defendant reserves the right to rely on: (1) uncited portions of the identified prior art; (2) other prior art not identified herein; (3) references that show the state of the art (irrespective of whether such references themselves qualify as prior art); (4) factual testimony from the inventors or authors of the prior art references, or purveyors of prior art devices; and (5) expert testimony.

Where Defendant cites a figure, the citation includes any text associated with the figure. Where Defendant cites passages relating to a figure, the citation includes the associated figure any other text associated with that figure. Where Defendant cites particular prior art as disclosing a claim element, that citation equally applies to all identical or similar claim elements in this chart. Defendant reserves the right to further assert that a claim element is inherent, the element would have been obvious to a person of ordinary skill in the art, or the element is disclosed in other prior art that may be combined with the cited prior art. To establish the inherency of certain features of the prior art to invalidate the asserted claims, Defendant may rely on cited or uncited portions of the prior art, other documents, factual testimony, and expert testimony.

This invalidity chart is based on information presently available to Defendant, and the information herein is provided as a non-limiting example.

Karam ’799 was filed on November 5, 2004, and published on May 11, 2006; therefore, Karam ’799 is prior art under at least 35 U.S.C. § 102(b).

Exhibit E-2

Claim Limitation		Karam ’799
Claim 1		
1[p]	A power delivery circuit configured to deliver power to one or more of a plurality of devices connected in a network, the power delivery circuit comprising:	To the extent the preamble is limiting, Karam ’799 discloses this element and/or renders it obvious either alone or in combination with other references and/or the knowledge of one of ordinary skill in the art. *See, e.g.*: “The present invention is directed to a method and apparatus for managing an Inline Power relationship between a network device and a Powered Device (PD) where the network device is acting as power sourcing equipment (PSE) to provide Inline Power to a first PD (PD1) which is, in turn, powering another PD (PD2)….The various relationships are briefly diagrammed in FIG. 2A. In the block diagram of FIG. 2A, a network device 30 configured as PSE is coupled via a first link 32 to a network 34. Link 32 may be any appropriate network link such as Ethernet, fiber, wireless, Satellite, terrestrial broadband wireless, digital subscriber line (DSL) and the like. Network 34 may be a local area network (LAN) such as in an office; a metro-politan area network (MAN) or a wide area network (WAN) such as the Internet or a corporate Intranet or the like.” Karam ’799 at [0039]. “FIG. 2B is a diagram of a system comprising a PSE and a first PD (PDl) and a second PD (PD2). A single 8-conductor cable can couple power and data (or just power) from the PSE to PDl. In the embodiment of FIG. 2B, a first cable having four pairs of conductors couples PDl to the PSE and a second such cable couples PD2 to PDl. PDl receives power and data from the PSE over the pair 3, 6 and pair 1, 2 (4 conductors). Pair 4, 5 and pair 7, 8 pass through PDl. PD2 is connected to PDl, for example with an RJ-45 type connector, and receives data over pair 3, 6 and pair 1, 2. Power is provided to PD2 over inline power provided on pairs 4, 5 and 7, 8. In accordance with this embodiment, data is not provided to PD2 over the pairs 4, 5 and 7, 8. An optional “potential data path” as shown may be provided for communications (if needed) between PDl and PD2. This could be a wireless connection, a common mode data communication path, an Ethernet data connection, or the like. The PSE shown may be a single PSE or a pair of PS Es associated with the same port of a network device or other PSE-type device. Note that typical 10/100 Base T Ethernet utilizes the 3, 6 and the 1, 2 pairs of an 8 conductor Ethernet cable. The 4, 5 and 7, 8 pairs are normally unused in this application although they are used in 1000 Base T (and higher) Ethernet.” Karam ’799 at [0044].

		"In FIG. 2D an arrangement is shown where a PSE provides power and data to three PDs: PDl, PD2 and PD3. This is again accomplished over a series of single 8 con-ductor (4 pair) cables daisy-chained between the various devices. Pair 3, 6 and pair 1, 2 provide data connectivity to PDl (via a first cable coupling the PSE and PDl), then to PD2 (via a second cable coupling PDl and PD2), then to PD3 (via a third cable coupling PD2 and PD3). These pairs also provide inline power to PDl. Power is provided to PD2 and PD3 as follows. For example, an inline power signal is provided between pair 4,5 (+) and pair 7, 8 (-). PD2 takes its power by coupling to conductors 4(+) and 7(-) (although others could be used) and PD3 takes its power by coupling to conductors 5(+) and 8(-) (although others could be used). This power coupling may be accomplished through an inductor (to provide a high-impedance AC (alternating cur-rent) path) or directly without an inductor (since there is no data on these lines). A potential data path may couple PDl and PD3 as shown (or other devices), if desired. Such potential data paths may be implemented in any convenient manner." Karam '799 at [0046]. "Turning now to FIG. 4A, another embodiment 50 of the present invention is illustrated in schematic form." Karam '799 at [0050]. "Turning now to FIG. 5, an alternative 70 to the circuit of FIG. 4A is illustrated in electrical schematic diagram form." Karam '799 at [0058].

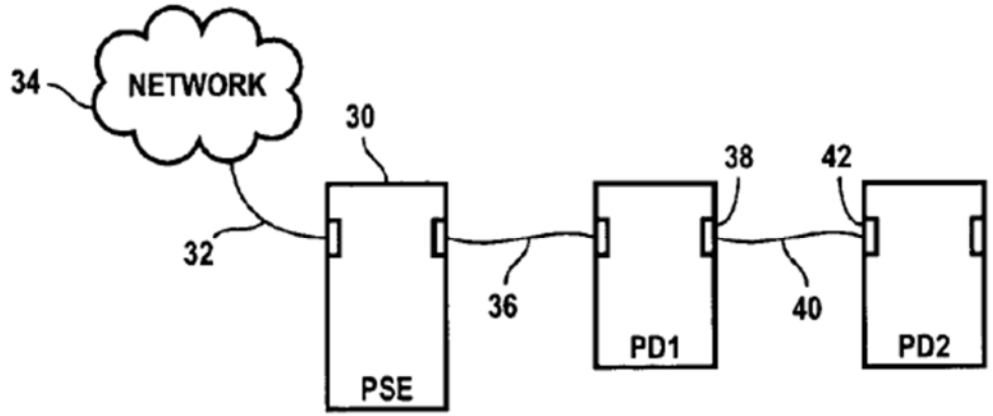

FIG. 2A

Karam ’799 at Fig. 2A.

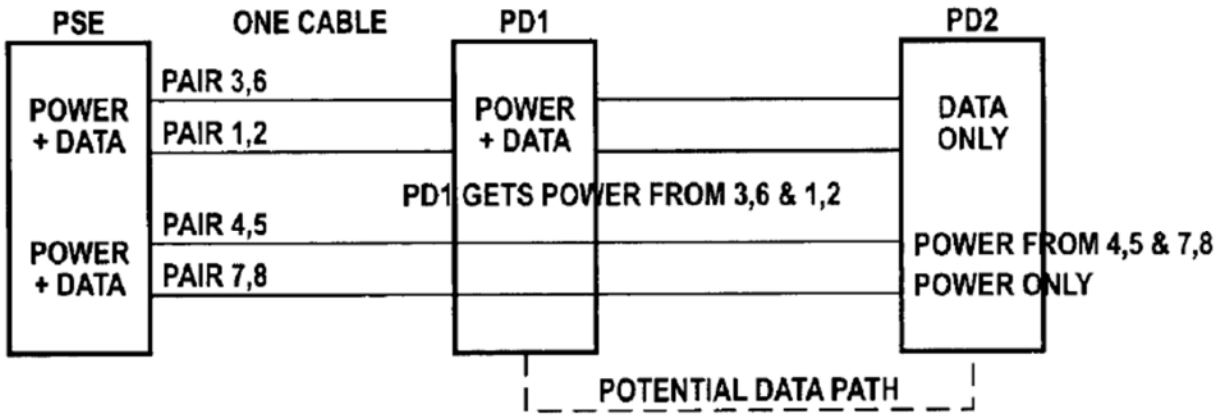

FIG. 2B

Karam ’799 at Fig. 2B.

Exhibit E-2

		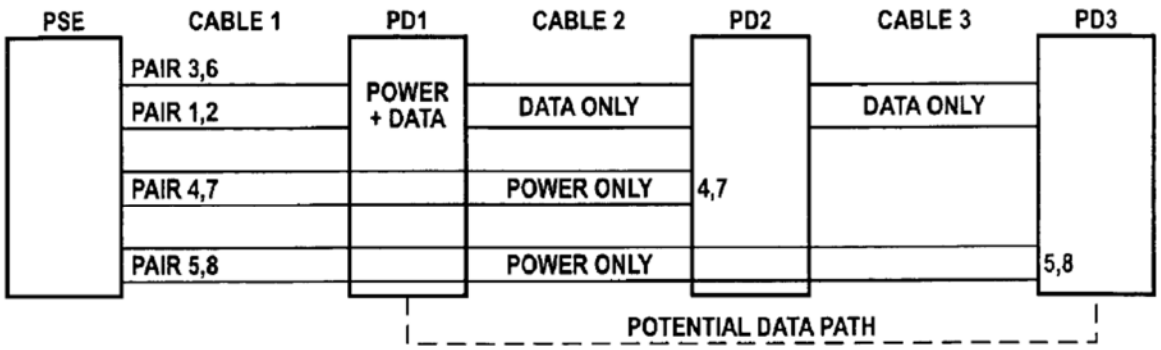 *FIG. 2D* Karam ’799 at Fig. 2D.

Exhibit E-2

		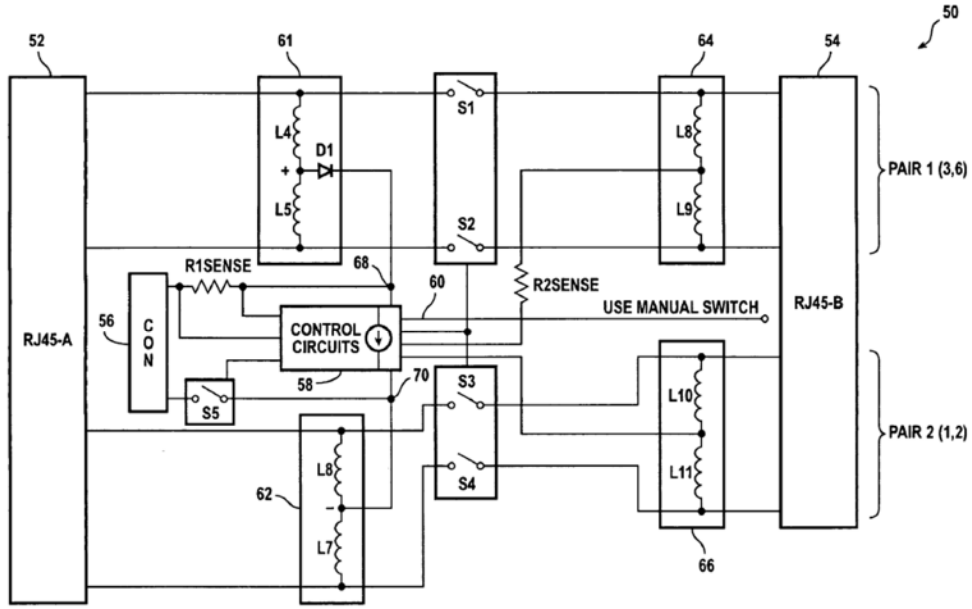 FIG. 4A Karam ’799 at Fig. 4A.

		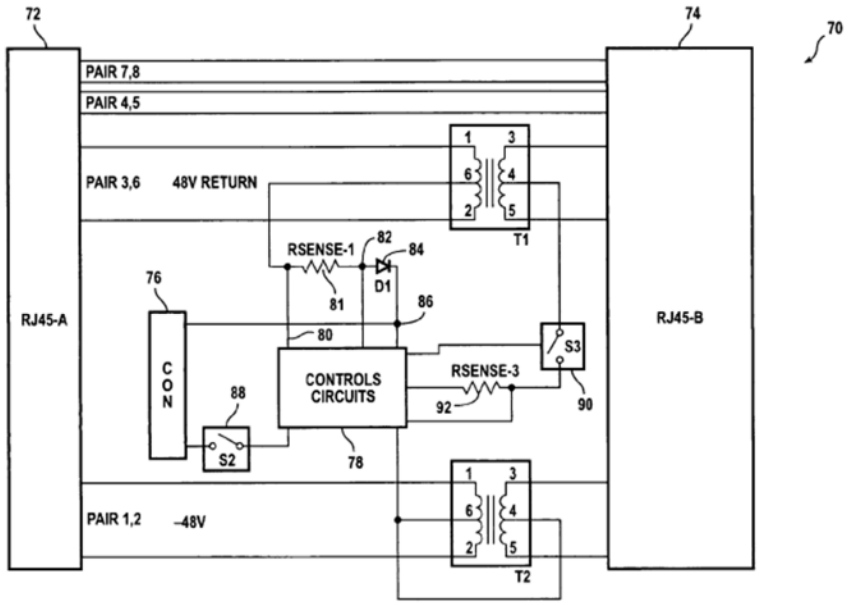 *FIG. 5* Karam ’799 at Fig. 5. To the extent that Plaintiff contends that Karam ’799 does not explicitly or inherently disclose this element, or render obvious this element, this element is obvious in combination with one or more references and/or with the knowledge of a person of ordinary skill in the art, as set forth in Defendant’s Invalidity Contentions.
1(a)	a voltage source configured to generate a voltage;	Karam ’799 discloses and/or renders obvious this limitation. *See, e.g.*: “FIG. 2B is a diagram of a system comprising a PSE and a first PD (PDl) and a second PD (PD2). A single 8-conductor cable can couple power and data (or just power) from the PSE to PDl. In the embodiment of FIG. 2B, a first cable having four pairs of conductors couples PDl to the PSE and a second such cable couples PD2 to PDl. PDl receives power and data from the PSE over the pair 3, 6 and pair 1, 2 (4 conductors). Pair 4, 5 and pair 7, 8 pass through PDl. PD2 is connected to PDl, for example with an RJ-45 type connector, and receives data over pair 3, 6 and pair 1, 2. Power is

		provided to PD2 over inline power provided on pairs 4, 5 and 7, 8. In accordance with this embodiment, data is not provided to PD2 over the pairs 4, 5 and 7, 8. An optional "potential data path" as shown may be provided for communications (if needed) between PDl and PD2. This could be a wireless connection, a common mode data communication path, an Ethernet data connection, or the like. The PSE shown may be a single PSE or a pair of PS Es associated with the same port of a network device or other PSE-type device. Note that typical 10/100 Base T Ethernet utilizes the 3, 6 and the 1, 2 pairs of an 8 conductor Ethernet cable. The 4, 5 and 7, 8 pairs are normally unused in this application although they are used in 1000 Base T (and higher) Ethernet." Karam '799 at [0044]. "Turning now to FIG. 4A, another embodiment 50 of the present invention is illustrated in schematic form. The device 50 of FIG. 4A is a power tap dongle. It comprises a first connector 52 which may, in an embodiment of the present invention, be an RJ-45 type connector of the female or male type, as appropriate to the application (or it may be any other suitable network connector). It also includes a second connector 54 which may be of similar type. In one embodiment of the present invention first connector 52 is a female type RJ-45 connector and second connector 54 is a male type RJ-45 connector so that an Ethernet cable with a male end may plug into first connector 52 and connector 54 may plug into a female RJ-45 connector such as one coupled to an Ethernet port of a laptop computing device. First and second pairs of conductors (pair 1 (3,6) and pair 2 (1,2)) cross device 50 to move data and power between first connector 52 and second connector 54. There is a third connector 56 which may, in one embodiment of the present invention, be a keyed connector adapted to receive the power supply connector of a particular cellular phone or some other connector designed to receive power such as a small device requiring power. Third and fourth pairs of conductors (as in a four-pair cable) may also be accommo-dated either with pass-through conductors or with circuitry similar to that provided for pair 1 and pair 2." Karam '799 at [0050]. "In the device 50 of FIG. 4A, first connector 52 is adapted to be coupled to a PSE port. The device 56 is adapted to couple data and power from a first and a second pair of conductors associated with first connector 52 across the device to second connector 54. In a first mode of operation the device 50 is coupled via first connector 52 to a port of a PSE device (not shown in FIG. 4A). In order for the PSE port to supply power to device 50, the PSE port must see the proper identity network characteristics. In accordance with the IEEE 802.3af standard this may be a 25,000-ohm resistance in response to certain discovery voltage signals applied to the network cabling. Alternatively, it

		may be some other identity network which responds to a probing signal in a known way to authorize application on inline power. In the first mode of operation, the second connector may or may not be coupled to another cable and the third connector may or may not be coupled to another device (such as a cell phone to be charged). Where no device is to be coupled to second connector 54 it is desirable to provide no inline power to second connector 54 unless and until a device exhibiting the correct identity network characteristics is present because to do so might expose a device to inline power that was not specifically designed to accept inline power with unpredictable consequences. In this case, it might, however, be desirable to provide power to third connector 56 as it might be configured to power a device such as a cell phone charging circuit or the like. In such a case, a manual power-on switch may be provided to provide a signal on line 60 to control circuit 58. Activating the manual power-on switch would send a signal to the control circuit (sometimes referred to as a controller) telling it to close switch S5 and thereby provide inline power to third connector 56. In one embodiment of the present invention controller 58 would keep switch S5 closed only while current was being drawn from third connector 56 so that if the device were unplugged from third connector 56 the power would turn off. In accordance with another embodiment of the present invention, the power may always be available at the third connector 56. Optionally, a DC-DC power converter may be provided between third connector 56 and the inline power signal at nodes 68 and 70 to provide a different voltage to a device coupled to third connector 56 rather than the nominal voltage provided by the inline power signal (nominally -48 VDC± and 0V floating return in the case of inline power over Ethernet).” Karam ’799 at [0051]. “In accordance with one embodiment of the present invention controller 58 operates to provide an identity network signal back to a PSE coupled with first connector 52 so that inline power may be provided under appropriate circumstances. In one embodiment of the present invention it is adapted to act as a PSE device to determine if an attached device at second connector 54 has an appropriate identity network so that inline power may be provided to it. If it does not verify that such an attached device is entitled to receive inline power, it may simply open (or leave open) switches Sl, S2, S3 and S4 thereby cutting off data and inline power to second connector 54. Power is obtained from pair 1 and pair 2 by auto transformer circuits (or equivalent center-tapped transformers) 61 and 62. Similar circuits 64 and 66 are used to inject a query signal into second connector 54 and to receive its response. Alternately, switches Sl, S2, S3 and S4 could be replaced with DC blocking capacitors or a magnetic with a high impedance to DC current which would allow data signals to pass but would block inline power signals.” Karam ’799 at [0052].

		"Turning now to FIG. 5, an alternative 70 to the circuit of FIG. 4A is illustrated in electrical schematic diagram form. In accordance with this version four pairs of conductors couple a first port 72 to a second port 74 in a dongle device providing accessory power at a third port 76. The 7-8 pair and the 4-5 pair are wired straight through from first port 72 to second port 74 as shown. The 3-6 pair is, in one embodiment, the transmit pair in a 10/100 Base T implementation and carries the 48V return inline power signal and data and has a center-tapped magnetic device Tl (such as a transformer or appropriate inductors) disposed in the transmit pair between first port 72 and second port 74. Pin 6 of the magnetic device Tl is coupled to control circuitry 78 at node 80, then through a current sensor 81 (such as a current sense resistor or other form of current sensor) to node 82 and then through a diode 84 to node 86. Power used by third port 76 will have its current measured by sensor 81. Switch 88 under control of control circuitry 78 and node 86 provide power to third port 76 which can be used, for example, to power an accessory device such as a portable telephone, small computing device, or the like. Pin 4 of magnetic device Tl is coupled through a switch 90 and a current sensor 92 to the control circuitry 78. An optional magnetic device T2 (which may be a center-tapped transformer or inductors as described above in connection with magnetic device Tl) is coupled to the 1-2 pair which (in the IEEE 802.3af standard) is the -48 VDC inline power leg. Inline power is provided to the third port 76 by closing switch 88 (it may be a normally closed switch). If a keyed connector is used it may be possible to eliminate switch 88. If the control circuitry 78 sees that power is applied and then the current in current sensor 92 goes to zero (device at second port 74 is off or disconnected) while current is still being used by third port 76 then it forces normally closed switch 90 to open making sure that a "hot cable" situation is not created at second port 74 by removing the inline power to second port 74. To provide inline power again to second port 74 the control circuitry 78 must identify the presence of an appropriate identity network across the 1-2 pair and the 3-6 pair. This may be achieved, for example, by control circuitry 78 reducing the applied voltage and closing switch 90 to carry out a conventional inline power discovery process which may also be followed up by a classification process, if desired in the particular application." Karam '799 at [0058].

Exhibit E-2

		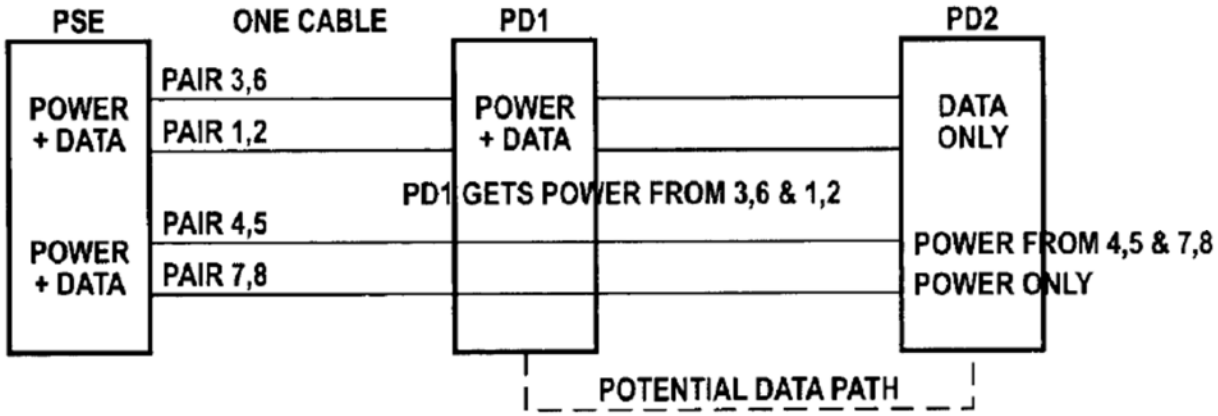 FIG. 2B Karam ’799 at Fig. 2B.

Exhibit E-2

		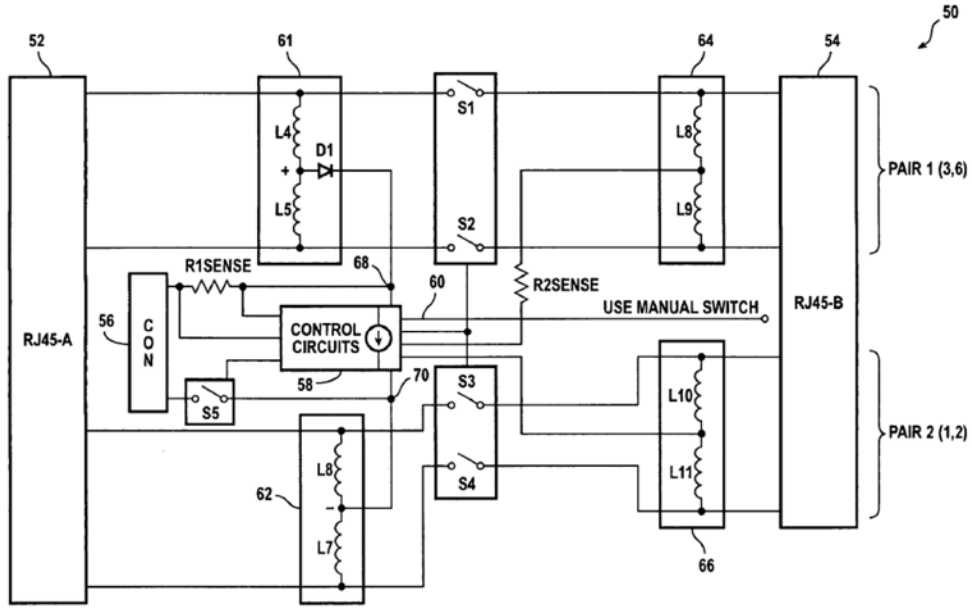 FIG. 4A Karam ’799 at Fig. 4A.

		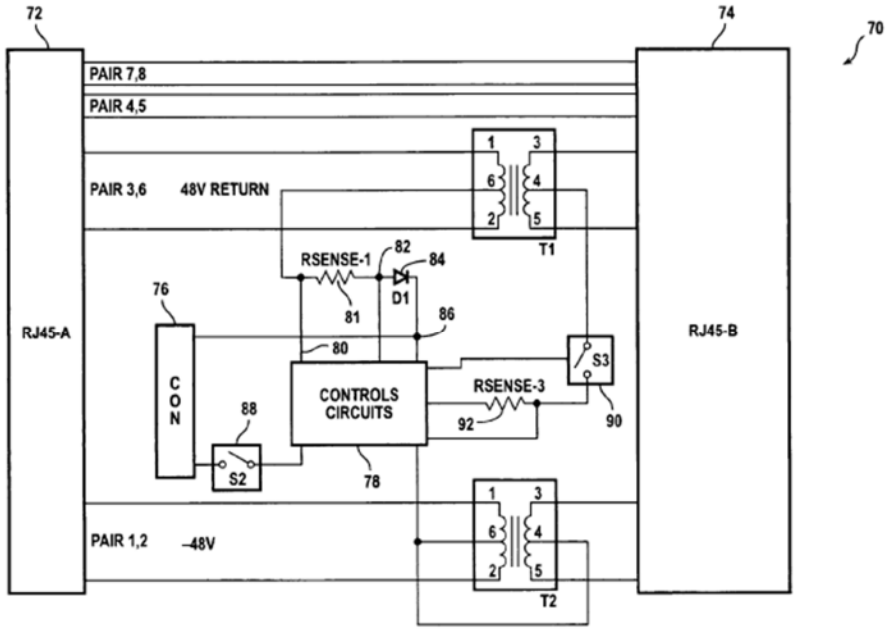 *FIG. 5* Karam '799 at Fig. 5. To the extent that Plaintiff contends that Karam '799 does not explicitly or inherently disclose this element, or render obvious this element, this element is obvious in combination with one or more references and/or with the knowledge of a person of ordinary skill in the art, as set forth in Defendant's Invalidity Contentions.
1(b)	a power relay switch configured to relay, when closed, the voltage generated by the voltage	Karam '799 discloses and/or renders obvious this limitation. *See, e.g.*: "In the device 50 of FIG. 4A, first connector 52 is adapted to be coupled to a PSE port. The device 56 is adapted to couple data and power from a first and a second pair of conductors associated with first connector 52 across the device to second connector 54. In a first mode of operation the device 50 is coupled via first connector 52 to a port of a PSE device (not shown in FIG. 4A). In order for

	source to one or more of the connected devices;	the PSE port to supply power to device 50, the PSE port must see the proper identity network characteristics. In accordance with the IEEE 802.3af standard this may be a 25,000-ohm resistance in response to certain discovery voltage signals applied to the network cabling. Alternatively, it may be some other identity network which responds to a probing signal in a known way to authorize application on inline power. In the first mode of operation, the second connector may or may not be coupled to another cable and the third connector may or may not be coupled to another device (such as a cell phone to be charged). Where no device is to be coupled to second connector 54 it is desirable to provide no inline power to second connector 54 unless and until a device exhibiting the correct identity network characteristics is present because to do so might expose a device to inline power that was not specifically designed to accept inline power with unpredictable consequences. In this case, it might, however, be desirable to provide power to third connector 56 as it might be configured to power a device such as a cell phone charging circuit or the like. In such a case, a manual power-on switch may be provided to provide a signal on line 60 to control circuit 58. Activating the manual power-on switch would send a signal to the control circuit (sometimes referred to as a controller) telling it to close switch S5 and thereby provide inline power to third connector 56. In one embodiment of the present invention controller 58 would keep switch S5 closed only while current was being drawn from third connector 56 so that if the device were unplugged from third connector 56 the power would turn off. In accordance with another embodiment of the present invention, the power may always be available at the third connector 56. Optionally, a DC-DC power converter may be provided between third connector 56 and the inline power signal at nodes 68 and 70 to provide a different voltage to a device coupled to third connector 56 rather than the nominal voltage provided by the inline power signal (nominally -48 VDC± and 0V floating return in the case of inline power over Ethernet).” Karam ’799 at [0051]. “In accordance with one embodiment of the present invention controller 58 operates to provide an identity network signal back to a PSE coupled with first connector 52 so that inline power may be provided under appropriate circumstances. In one embodiment of the present invention it is adapted to act as a PSE device to determine if an attached device at second connector 54 has an appropriate identity network so that inline power may be provided to it. If it does not verify that such an attached device is entitled to receive inline power, it may simply open (or leave open) switches Sl, S2, S3 and S4 thereby cutting off data and inline power to second connector 54. Power is obtained from pair 1 and pair 2 by auto transformer circuits (or equivalent center-tapped transformers) 61 and 62. Similar circuits 64 and 66 are used to inject a query signal into second con-nector 54 and to receive

		its response. Alternately, switches Sl, S2, S3 and S4 could be replaced with DC blocking capacitors or a magnetic with a high impedance to DC current which would allow data signals to pass but would block inline power signals." Karam '799 at [0052]. "Turning now to FIG. 5, an alternative 70 to the circuit of FIG. 4A is illustrated in electrical schematic diagram form. In accordance with this version four pairs of conductors couple a first port 72 to a second port 74 in a dongle device providing accessory power at a third port 76. The 7-8 pair and the 4-5 pair are wired straight through from first port 72 to second port 74 as shown. The 3-6 pair is, in one embodiment, the transmit pair in a 10/100 Base T implementation and carries the 48V return inline power signal and data and has a center-tapped magnetic device Tl (such as a transformer or appropriate inductors) disposed in the transmit pair between first port 72 and second port 74. Pin 6 of the magnetic device Tl is coupled to control circuitry 78 at node 80, then through a current sensor 81 (such as a current sense resistor or other form of current sensor) to node 82 and then through a diode 84 to node 86. Power used by third port 76 will have its current measured by sensor 81. Switch 88 under control of control circuitry 78 and node 86 provide power to third port 76 which can be used, for example, to power an accessory device such as a portable telephone, small computing device, or the like. Pin 4 of magnetic device Tl is coupled through a switch 90 and a current sensor 92 to the control circuitry 78. An optional magnetic device T2 (which may be a center-tapped transformer or inductors as described above in connection with magnetic device Tl) is coupled to the 1-2 pair which (in the IEEE 802.3af standard) is the -48 VDC inline power leg. Inline power is provided to the third port 76 by closing switch 88 (it may be a normally closed switch). If a keyed connector is used it may be possible to eliminate switch 88. If the control circuitry 78 sees that power is applied and then the current in current sensor 92 goes to zero (device at second port 74 is off or disconnected) while current is still being used by third port 76 then it forces normally closed switch 90 to open making sure that a "hot cable" situation is not created at second port 74 by removing the inline power to second port 74. To provide inline power again to second port 74 the control circuitry 78 must identify the presence of an appropriate identity network across the 1-2 pair and the 3-6 pair. This may be achieved, for example, by control circuitry 78 reducing the applied voltage and closing switch 90 to carry out a conventional inline power discovery process which may also be followed up by a classification process, if desired in the particular application." Karam '799 at [0058].

Exhibit E-2

		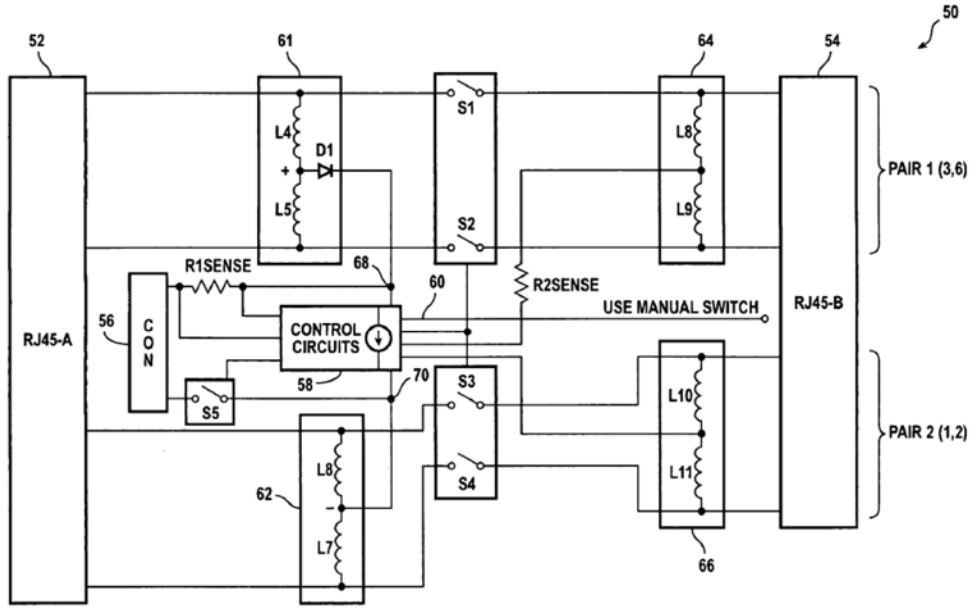 FIG. 4A Karam ’799 at Fig. 4A.

		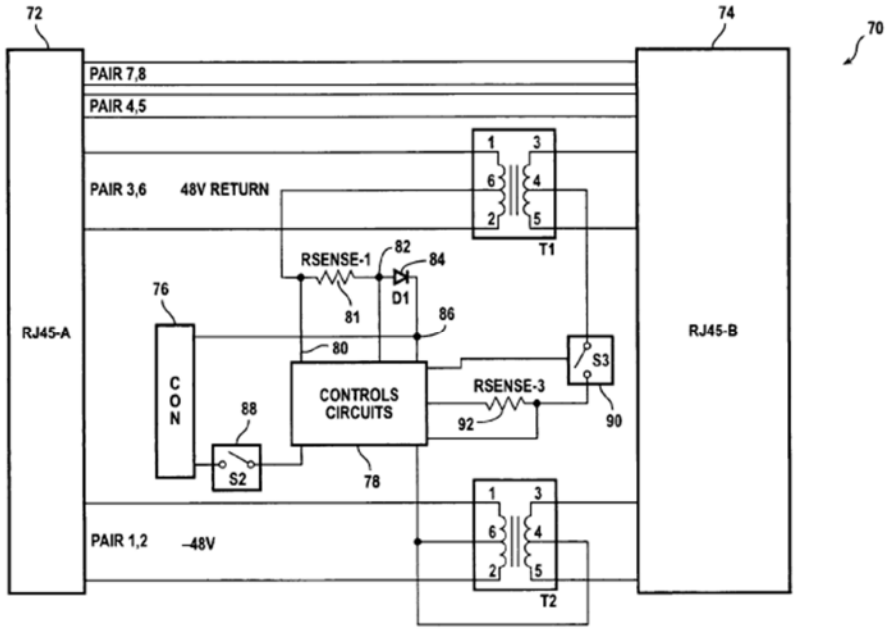 *FIG. 5* Karam ’799 at Fig. 5. To the extent that Plaintiff contends that Karam ’799 does not explicitly or inherently disclose this element, or render obvious this element, this element is obvious in combination with one or more references and/or with the knowledge of a person of ordinary skill in the art, as set forth in Defendant’s Invalidity Contentions.
1(c)	a signature resistor connected to the switch and configured to detect a power source from one or	Karam ’799 discloses and/or renders obvious this limitation. *See, e.g.*: “In these embodiments if one PD is powered already, the second PD would need to signal the PSE that it is present and needs power as well. This communication may be accomplished in at least three ways. First, the PD would present a differential signature similar to that used in the Cisco

	more of the connected devices; and	legacy inline power Scheme described, for example, in U.S. Pat. No. 6,804,351." Karam '799 at [0064]. "In order to provide regular Inline Power to a PD from a PSE it is a general requirement that two processes first be accomplished. First, a "discovery" process must be accomplished to verify that the candidate PD is, in fact, adapted to receive Inline Power. Second, a "classification" process must be accomplished to determine an amount of Inline Power to allocate to the PD, the PSE having a finite amount of Inline Power resources available for allocation to coupled PDs." Karam '799 at [0018]. "The discovery process looks for an "identity network" at the PD. The identity network is one or more electrical components which respond in certain predetermined ways when probed by a signal from the PSE. One of the simplest identity networks is a resistor coupled across the two pairs of common mode power/data conductors. The IEEE 802.3af standard calls for a 25,000 ohm resistor to be presented for discovery by the PD." Karam '799 at [0019]. "The PSE applies some Inline Power (not "regular" Inline Power, i.e., reduced voltage and limited current) as the discovery signal to measure resistance across the two pairs of conductors to determine if the 25,000 ohm resistance is present. This is typically implemented as a first voltage for a first period of time and a second voltage for a second period of time, both voltages exceeding a maximum idle voltage (0-5 VDC in accordance with the IEEE 802.3af standard) which may be present on the pair of conductors during an "idle" time while regular Inline Power is not provided. The discovery signals do not enter a classification voltage range (typically about 15-20V in accordance with the IEEE 802.3af standard) but have a voltage between that range and the idle voltage range. The return currents respon-sive to application of the discovery signals are measured and a resistance across the two pairs of conductors is calculated. If that resistance is the identity network resistance, then the classification process may commence, otherwise the system returns to an idle condition." Karam '799 at [0020]. "In accordance with the IEEE 802.3af standard, the classification process involves applying a voltage in a clas-sification range to the PD. The PD may use a current source to send a predetermined classification current signal back to the PSE. This classification current signal

		corresponds to the "class" of the PD. In the IEEE 802.3af standard as presently constituted, the classes are as set forth in Table I:" Karam '799 at [0021]. "In the device 50 of FIG. 4A, first connector 52 is adapted to be coupled to a PSE port. The device 56 is adapted to couple data and power from a first and a second pair of conductors associated with first connector 52 across the device to second connector 54. In a first mode of operation the device 50 is coupled via first connector 52 to a port of a PSE device (not shown in FIG. 4A). In order for the PSE port to supply power to device 50, the PSE port must see the proper identity network characteristics. In accordance with the IEEE 802.3af standard this may be a 25,000-ohm resistance in response to certain discovery voltage signals applied to the network cabling. Alternatively, it may be some other identity network which responds to a probing signal in a known way to authorize application on inline power. In the first mode of operation, the second connector may or may not be coupled to another cable and the third connector may or may not be coupled to another device (such as a cell phone to be charged). Where no device is to be coupled to second connector 54 it is desirable to provide no inline power to second connector 54 unless and until a device exhibiting the correct identity network char-acteristics is present because to do so might expose a device to inline power that was not specifically designed to accept inline power with unpredictable consequences. In this case, it might, however, be desirable to provide power to third connector 56 as it might be configured to power a device such as a cell phone charging circuit or the like. In such a case, a manual power-on switch may be provided to provide a signal on line 60 to control circuit 58. Activating the manual power-on switch would send a signal to the control circuit (sometimes referred to as a controller) telling it to close switch S5 and thereby provide inline power to third connector 56. In one embodiment of the present invention controller 58 would keep switch S5 closed only while current was being drawn from third connector 56 so that if the device were unplugged from third connector 56 the power would turn off. In accordance with another embodi-ment of the present invention, the power may always be available at the third connector 56. Optionally, a DC-DC power converter may be provided between third connector 56 and the inline power signal at nodes 68 and 70 to provide a different voltage to a device coupled to third connector 56 rather than the nominal voltage provided by the inline power signal (nominally -48 VDC± and 0V floating return in the case of inline power over Ethernet)." Karam '799 at [0051]. "Turning now to FIG. 6 an electrical schematic diagram of a section 122 of a wired data telecommunications network is illustrated. Section 122 includes a first PD (PDl) and a second PD

(PD2) both wired across pair 1-2 and pair 3-6 of the wired data telecommunications network. Switches Sl and S2 are provided to decouple PD2 from PDl when they are open. In this embodiment of the invention, PD2 presents the identity network (the 25K resistor). If PD2 were not present (unplugged) PDl could pull a small voltage at a small current under idle conditions (up to about 5V at a few mA in one embodiment) which could be used to power some low power electronics, charge a battery, or the like. When switch S3 of D2 is closed then the PDl is powered with this low power signal (or whatever is available across the two pairs). If PD2 is then plugged in the threshold detect circuit 124 can sense the presence of discovery and classification voltages and open S3 to avoid undesirable interactions between PDl and the discovery/classification process for PD2. Once regular inline power is again available, S3 may be closed again. As long as a minimum amount of power is drawn, current will continue to flow. In the IEEE 802.3af standard this minimum is about 10 mA. If it drops below that level, inline power will tum off. This could happen if PD2 were uncoupled from PDl. If PDl wanted to continue drawing high-voltage inline power in the absence of PD2 and pull more than about 10 mA of it, then it would have to open switches Sl and S2 to avoid a hot cable situation." Karam '799 at [0059].

TABLE I

Class	PSE Classification Current Range (mA)	Corresponding Inline Power Level (W)
0	0–5	15.4
1	8–13	4.0
2	16–21	7.0
3	25–31	15.4
4	35–45	15.4

Karam '799 at Table I.

Exhibit E-2

		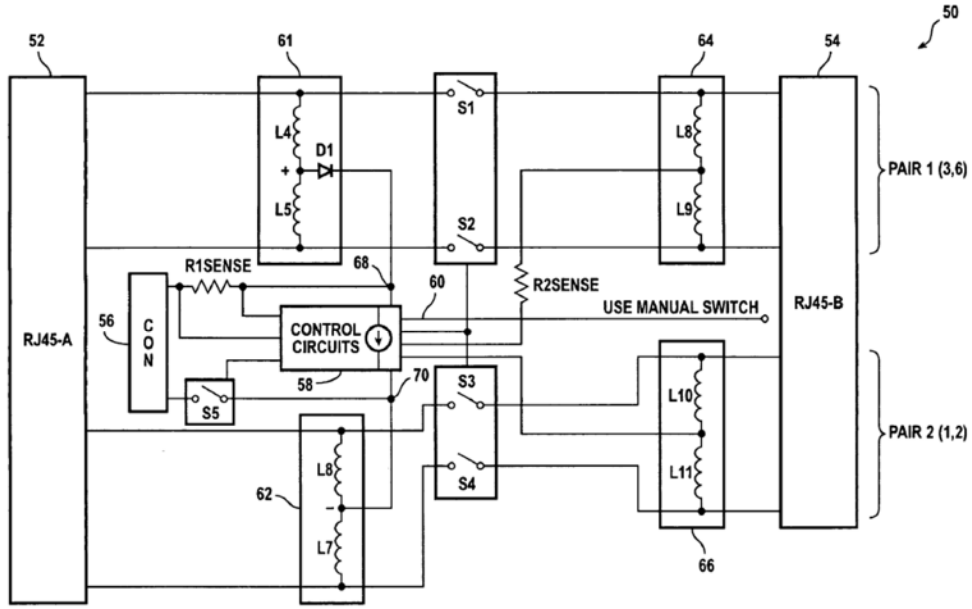 FIG. 4A Karam ’799 at Fig. 4A.

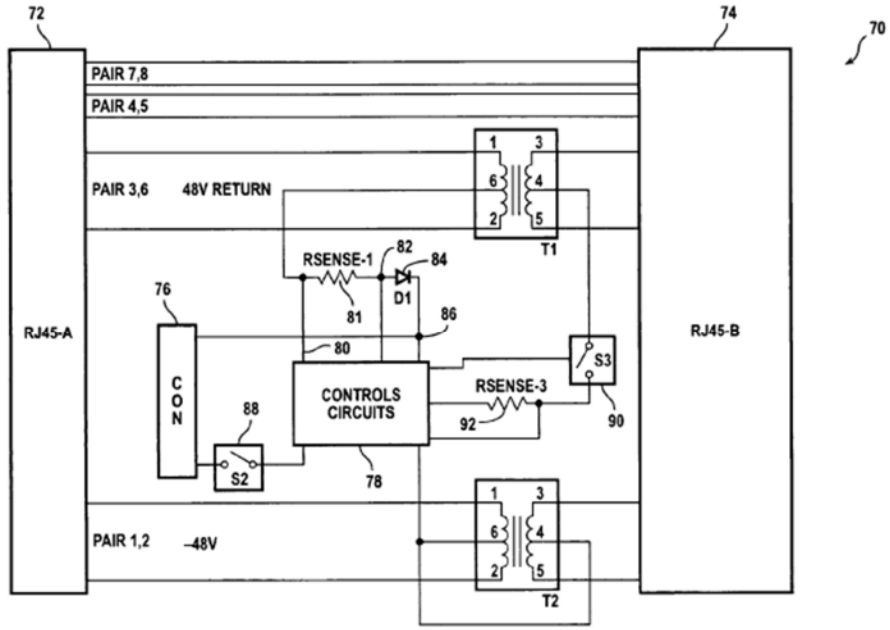

FIG. 5

Karam ’799 at Fig. 5.

		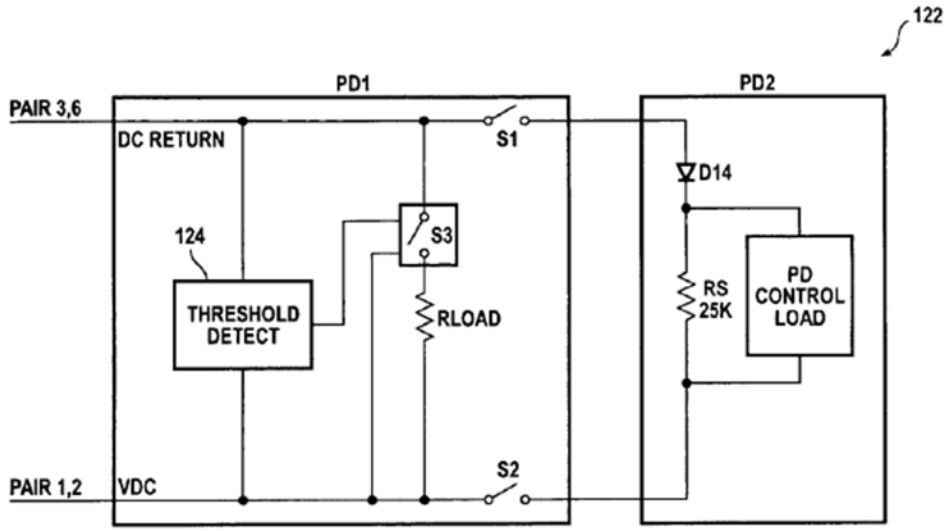 *FIG. 6* Karam ’799 at Fig. 6. To the extent that Plaintiff contends that Karam ’799 does not explicitly or inherently disclose this element, or render obvious this element, this element is obvious in combination with one or more references and/or with the knowledge of a person of ordinary skill in the art, as set forth in Defendant’s Invalidity Contentions.
1(d)	a load detector connected to the switch and configured to read a load current flowing therethrough so as to detect a load in one of the connected devices, and to extract information about	Karam ’799 discloses and/or renders obvious this limitation. *See, e.g.*: “In these embodiments if one PD is powered already, the second PD would need to signal the PSE that it is present and needs power as well. This communication may be accomplished in at least three ways. First, the PD would present a differential signature similar to that used in the Cisco legacy inline power Scheme described, for example, in U.S. Pat. No. 6,804,351.” Karam ’799 at [0064].

	the connected device based on the load current;	"In order to provide regular Inline Power to a PD from a PSE it is a general requirement that two processes first be accomplished. First, a "discovery" process must be accomplished to verify that the candidate PD is, in fact, adapted to receive Inline Power. Second, a "classification" process must be accomplished to determine an amount of Inline Power to allocate to the PD, the PSE having a finite amount of Inline Power resources available for allocation to coupled PDs." Karam '799 at [0018]. "The discovery process looks for an "identity network" at the PD. The identity network is one or more electrical components which respond in certain predetermined ways when probed by a signal from the PSE. One of the simplest identity networks is a resistor coupled across the two pairs of common mode power/data conductors. The IEEE 802.3af standard calls for a 25,000 ohm resistor to be presented for discovery by the PD." Karam '799 at [0019]. "The PSE applies some Inline Power (not "regular" Inline Power, i.e., reduced voltage and limited current) as the discovery signal to measure resistance across the two pairs of conductors to determine if the 25,000 ohm resistance is present. This is typically implemented as a first voltage for a first period of time and a second voltage for a second period of time, both voltages exceeding a maximum idle voltage (0-5 VDC in accordance with the IEEE 802.3af standard) which may be present on the pair of conductors during an "idle" time while regular Inline Power is not provided. The discovery signals do not enter a classification voltage range (typically about 15-20V in accordance with the IEEE 802.3af standard) but have a voltage between that range and the idle voltage range. The return currents responsive to application of the discovery signals are measured and a resistance across the two pairs of conductors is calculated. If that resistance is the identity network resistance, then the classification process may commence, otherwise the system returns to an idle condition." Karam '799 at [0020]. "In accordance with the IEEE 802.3af standard, the classification process involves applying a voltage in a classification range to the PD. The PD may use a current source to send a predetermined classification current signal back to the PSE. This classification current signal corresponds to the "class" of the PD. In the IEEE 802.3af standard as presently constituted, the classes are as set forth in Table I:" Karam '799 at [0021].

		"In the device 50 of FIG. 4A, first connector 52 is adapted to be coupled to a PSE port. The device 56 is adapted to couple data and power from a first and a second pair of conductors associated with first connector 52 across the device to second connector 54. In a first mode of operation the device 50 is coupled via first connector 52 to a port of a PSE device (not shown in FIG. 4A). In order for the PSE port to supply power to device 50, the PSE port must see the proper identity network characteristics. In accordance with the IEEE 802.3af standard this may be a 25,000-ohm resistance in response to certain discovery voltage signals applied to the network cabling. Alternatively, it may be some other identity network which responds to a probing signal in a known way to authorize application on inline power. In the first mode of operation, the second connector may or may not be coupled to another cable and the third connector may or may not be coupled to another device (such as a cell phone to be charged). Where no device is to be coupled to second connector 54 it is desirable to provide no inline power to second connector 54 unless and until a device exhibiting the correct identity network char-acteristics is present because to do so might expose a device to inline power that was not specifically designed to accept inline power with unpredictable consequences. In this case, it might, however, be desirable to provide power to third connector 56 as it might be configured to power a device such as a cell phone charging circuit or the like. In such a case, a manual power-on switch may be provided to provide a signal on line 60 to control circuit 58. Activating the manual power-on switch would send a signal to the control circuit (sometimes referred to as a controller) telling it to close switch S5 and thereby provide inline power to third connector 56. In one embodiment of the present invention controller 58 would keep switch S5 closed only while current was being drawn from third connector 56 so that if the device were unplugged from third connector 56 the power would turn off. In accordance with another embodi-ment of the present invention, the power may always be available at the third connector 56. Optionally, a DC-DC power converter may be provided between third connector 56 and the inline power signal at nodes 68 and 70 to provide a different voltage to a device coupled to third connector 56 rather than the nominal voltage provided by the inline power signal (nominally -48 VDC± and 0V floating return in the case of inline power over Ethernet)." Karam '799 at [0051]. "Turning now to FIG. 6 an electrical schematic diagram of a section 122 of a wired data telecommunications network is illustrated. Section 122 includes a first PD (PDl) and a second PD (PD2) both wired across pair 1-2 and pair 3-6 of the wired data telecommunications network. Switches Sl and S2 are provided to decouple PD2 from PDl when they are open. In this embodiment of the invention, PD2 presents the identity network (the 25K resistor). If PD2 were not present

(unplugged) PDl could pull a small voltage at a small current under idle conditions (up to about 5V at a few mA in one embodiment) which could be used to power some low power electronics, charge a battery, or the like. When switch S3 of D2 is closed then the PDl is powered with this low power signal (or whatever is available across the two pairs). If PD2 is then plugged in the threshold detect circuit 124 can sense the presence of discovery and classification voltages and open S3 to avoid undesirable interactions between PDl and the discovery/classification process for PD2. Once regular inline power is again available, S3 may be closed again. As long as a minimum amount of power is drawn, current will continue to flow. In the IEEE 802.3af standard this minimum is about 10 mA. If it drops below that level, inline power will tum off. This could happen if PD2 were uncoupled from PDl. If PDl wanted to continue drawing high-voltage inline power in the absence of PD2 and pull more than about 10 mA of it, then it would have to open switches Sl and S2 to avoid a hot cable situation." Karam '799 at [0059].

TABLE I

Class	PSE Classification Current Range (mA)	Corresponding Inline Power Level (W)
0	0–5	15.4
1	8–13	4.0
2	16–21	7.0
3	25–31	15.4
4	35–45	15.4

Karam '799 at Table I.

Exhibit E-2

		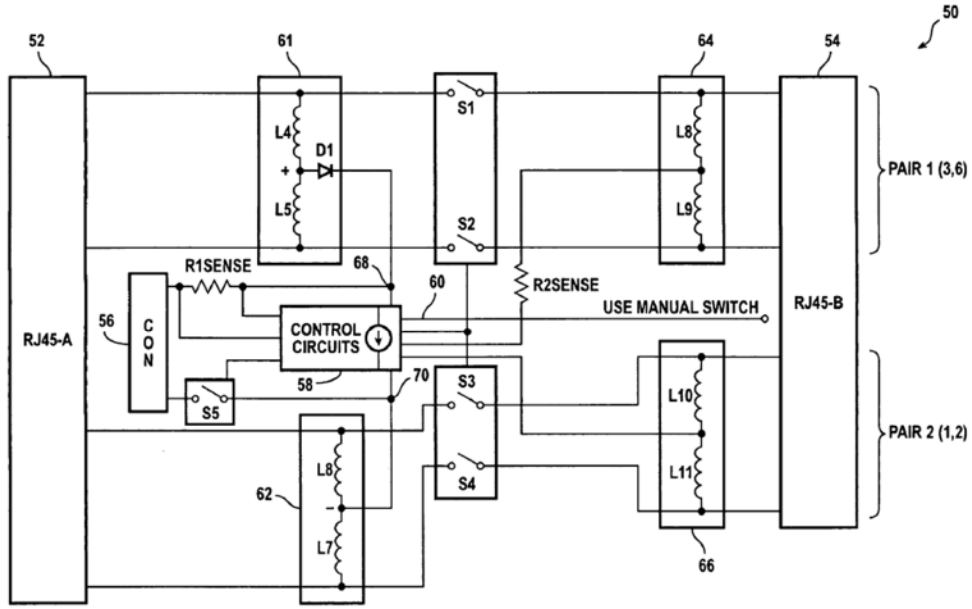 FIG. 4A Karam ’799 at Fig. 4A.

		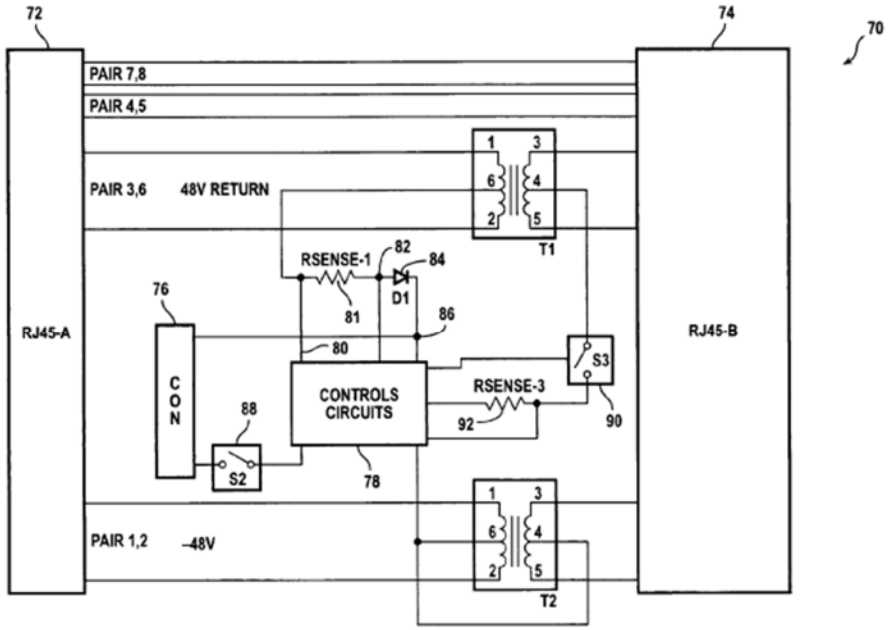 *FIG. 5* Karam ’799 at Fig. 5.

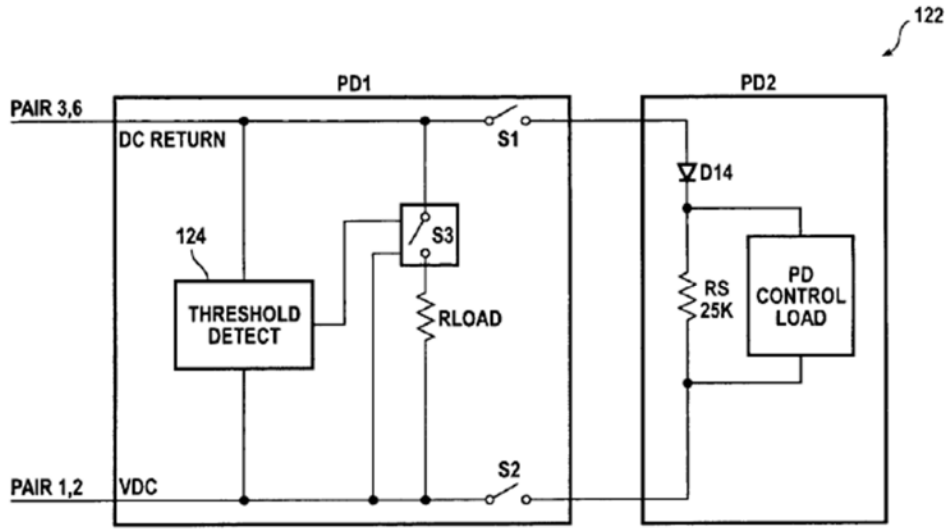

FIG. 6

Karam ’799 at Fig. 6.

TABLE I

Class	PSE Classification Current Range (mA)	Corresponding Inline Power Level (W)
0	0–5	15.4
1	8–13	4.0
2	16–21	7.0
3	25–31	15.4
4	35–45	15.4

Karam ’799 at Table I.

To the extent that Plaintiff contends that Karam ’799 does not explicitly or inherently disclose this element, or render obvious this element, this element is obvious in combination with one or more

		references and/or with the knowledge of a person of ordinary skill in the art, as set forth in Defendant's Invalidity Contentions.
1(e)	wherein the information extracted by the load detector comprises information regarding whether the connected device is powered on or powered off, and whether or not the connected device needs a supply of power.	Karam '799 discloses and/or renders obvious this limitation. *See, e.g.*: PD-1 "obtains a power requirement, and in one embodiment of the present invention, stores that power requirement in a memory store M1, M2 corresponding to the respective interface for the powered device." Karam '799 at [0048]. "In one embodiment of the present invention controller 58 would keep switch S5 closed only while current was being drawn from third connector 56 so that if the device were unplugged from third connector 56 the power would turn off." Karam '799 at [0051]. "Removal of the device coupled at third connector 56 removes the current drain which may, in an embodiment of the present invention, cause controller 58 to stop requesting inline power from the PSE coupled to first connector 52. Accordingly, switches S1, S2, S3 and S4 would then close and switch S5 would open so that data was conducted between connectors 52 and 54." Karam '799 at [0057]. "Accordingly, attached powered devices may now communicate their power requirements to an intermediate powered device which can calculate a total power requirement and use that to negotiate a total power package with an attached PSE." Karam '799 at [0049]. "In order to provide regular Inline Power to a PD from a PSE it is a general requirement that two processes first be accomplished. First, a "discovery" process must be accomplished to verify that the candidate PD is, in fact, adapted to receive Inline Power. Second, a "classification" process must be accomplished to determine an amount of Inline Power to allocate to the PD, the PSE having a finite amount of Inline Power resources available for allocation to coupled PDs." Karam '799 at [0018]. "The discovery process looks for an "identity network" at the PD. The identity network is one or more electrical components which respond in certain predetermined ways when probed by a signal from the PSE. One of the simplest identity networks is a resistor coupled across the two pairs of

		common mode power/data conductors. The IEEE 802.3af standard calls for a 25,000 ohm resistor to be presented for discovery by the PD." Karam '799 at [0019]. "The PSE applies some Inline Power (not "regular" Inline Power, i.e., reduced voltage and limited current) as the discovery signal to measure resistance across the two pairs of conductors to determine if the 25,000 ohm resistance is present. This is typically implemented as a first voltage for a first period of time and a second voltage for a second period of time, both voltages exceeding a maximum idle voltage (0-5 VDC in accordance with the IEEE 802.3af standard) which may be present on the pair of conductors during an "idle" time while regular Inline Power is not provided. The discovery signals do not enter a classification voltage range (typically about 15-20V in accordance with the IEEE 802.3af standard) but have a voltage between that range and the idle voltage range. The return currents responsive to application of the discovery signals are measured and a resistance across the two pairs of conductors is calculated. If that resistance is the identity network resistance, then the classification process may commence, otherwise the system returns to an idle condition." Karam '799 at [0020]. "In accordance with the IEEE 802.3af standard, the classification process involves applying a voltage in a classification range to the PD. The PD may use a current source to send a predetermined classification current signal back to the PSE. This classification current signal corresponds to the "class" of the PD. In the IEEE 802.3af standard as presently constituted, the classes are as set forth in Table I:" Karam '799 at [0021]. "Turning now to FIG. 5, an alternative 70 to the circuit of FIG. 4A is illustrated in electrical schematic diagram form. In accordance with this version four pairs of conductors couple a first port 72 to a second port 74 in a dongle device providing accessory power at a third port 76. The 7-8 pair and the 4-5 pair are wired straight through from first port 72 to second port 74 as shown. The 3-6 pair is, in one embodiment, the transmit pair in a 10/100 Base T implementation and carries the 48V return inline power signal and data and has a center-tapped magnetic device Tl (such as a transformer or appropriate inductors) disposed in the transmit pair between first port 72 and second port 74. Pin 6 of the magnetic device Tl is coupled to control circuitry 78 at node 80, then through a current sensor 81 (such as a current sense resistor or other form of current sensor) to node 82 and then through a diode 84 to node 86. Power used by third port 76 will have its current measured by sensor 81. Switch 88 under control of control circuitry 78 and node 86 provide power to third port

		76 which can be used, for example, to power an accessory device such as a portable telephone, small computing device, or the like. Pin 4 of magnetic device Tl is coupled through a switch 90 and a current sensor 92 to the control circuitry 78. An optional magnetic device T2 (which may be a center-tapped trans-former or inductors as described above in connection with magnetic device Tl) is coupled to the 1-2 pair which (in the IEEE 802.3af standard) is the -48 VDC inline power leg. Inline power is provided to the third port 76 by closing switch 88 (it may be a normally closed switch). If a keyed connector is used it may be possible to eliminate switch 88. If the control circuitry 78 sees that power is applied and then the current in current sensor 92 goes to zero (device at second port 74 is off or disconnected) while current is still being used by third port 76 then it forces normally closed switch 90 to open making sure that a "hot cable" situation is not created at second port 74 by removing the inline power to second port 74. To provide inline power again to second port 74 the control circuitry 78 must identify the presence of an appropriate identity network across the 1-2 pair and the 3-6 pair. This may be achieved, for example, by control circuitry 78 reducing the applied voltage and closing switch 90 to carry out a conventional inline power discovery process which may also be followed up by a classification process, if desired in the particular application." Karam '799 at [0058].

		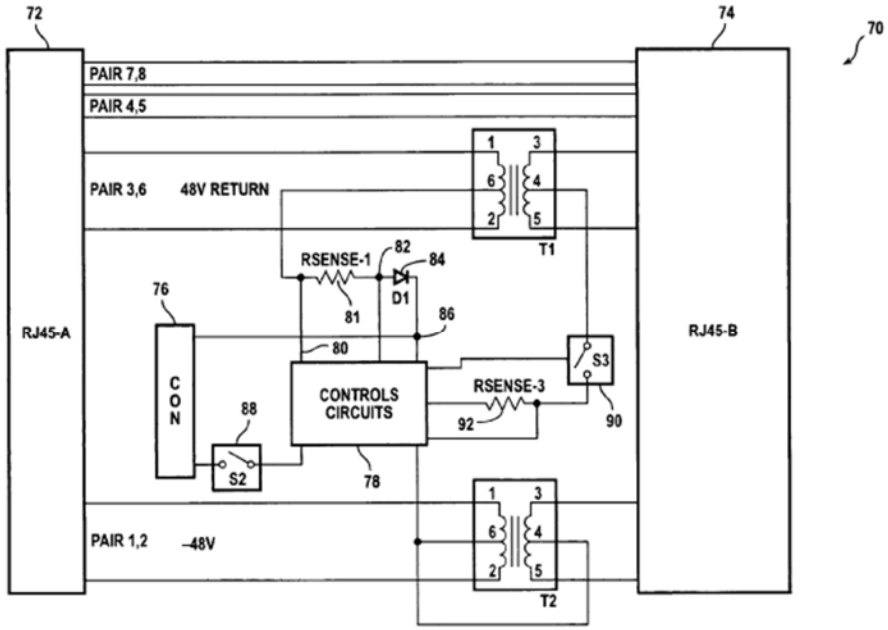 *FIG. 5* Karam ’799 at Fig. 5. To the extent that Plaintiff contends that Karam ’799 does not explicitly or inherently disclose this element, or render obvious this element, this element is obvious in combination with one or more references and/or with the knowledge of a person of ordinary skill in the art, as set forth in Defendant’s Invalidity Contentions.
Claim 5		
5	The power delivery circuit of claim 1, wherein the load detector is further configured to detect removal of one of the	Karam ’799 discloses and/or renders obvious this limitation. *See, e.g.*: “This communication may take place in any of a number of ways. First, it may use conventional IEEE 802.3af standard PSE-PD communications protocols by treating the interface 38 on PD-1 as a PSE and the interface 42 of PD-2 as a PD. In this way, as long as the PD-2 to PD-1 link is up and

	plurality of devices from the network.	communicating before the PD-1 to PSE 30 power relationship is established PD-1 will be able to configure itself to tell PSE 30 that it has a class which represents the combined power requirements of PD-1 and PD-2. Unfortunately, if PD-2 gets attached to and removed from PD-1 (as if PD-1 is a laptop and PD-2 is some peripheral device such as a cell phone, PDA, another laptop, or the like) then PD-l's power requirements will change from time to time, a situation not presently addressed by the IEEE 802.3af standard. To respond to such a situation, PSE 30 may be provisioned with the capability to periodically adjust the Inline Power relationship with its attached PDs." Karam '799 at [0042]. "In the device 50 of FIG. 4A, first connector 52 is adapted to be coupled to a PSE port. The device 56 is adapted to couple data and power from a first and a second pair of conductors associated with first connector 52 across the device to second connector 54. In a first mode of operation the device 50 is coupled via first connector 52 to a port of a PSE device (not shown in FIG. 4A). In order for the PSE port to supply power to device 50, the PSE port must see the proper identity network characteristics. In accordance with the IEEE 802.3af standard this may be a 25,000-ohm resistance in response to certain discovery voltage signals applied to the network cabling. Alternatively, it may be some other identity network which responds to a probing signal in a known way to authorize application on inline power. In the first mode of operation, the second connector may or may not be coupled to another cable and the third connector may or may not be coupled to another device (such as a cell phone to be charged). Where no device is to be coupled to second connector 54 it is desirable to provide no inline power to second connector 54 unless and until a device exhibiting the correct identity network char-acteristics is present because to do so might expose a device to inline power that was not specifically designed to accept inline power with unpredictable consequences. In this case, it might, however, be desirable to provide power to third connector 56 as it might be configured to power a device such as a cell phone charging circuit or the like. In such a case, a manual power-on switch may be provided to provide a signal on line 60 to control circuit 58. Activating the manual power-on switch would send a signal to the control circuit (sometimes referred to as a controller) telling it to close switch S5 and thereby provide inline power to third connector 56. In one embodiment of the present invention controller 58 would keep switch S5 closed only while current was being drawn from third connector 56 so that if the device were unplugged from third connector 56 the power would turn off. In accordance with another embodi-ment of the present invention, the power may always be available at the third connector 56. Optionally, a DC-DC power converter may be provided between third connector 56 and the inline

		power signal at nodes 68 and 70 to provide a different voltage to a device coupled to third connector 56 rather than the nominal voltage provided by the inline power signal (nominally -48 VDC± and 0V floating return in the case of inline power over Ethernet).” Karam ’799 at [0051]. “In one embodiment of the FIG. 4A device 50 a switch is included to provide a switch signal on line 60. This would be used for situations where it is desirable to provide power to the third connector 56 while nothing is coupled to the second connector 54. Activating the switch places switches Sl, S2, S3 and S4 into the open state so that second connector 54 has no data and no power. It also causes the controller 58 to present an appropriate identity network across the various pairs of the wired data telecommunica-tions network so that a PSE coupled to the first connector 52 applies inline power which can then be applied to third connector 56 either directly or through an appropriate DC-DC power converter (to change the voltage applied to the third connector 56 to a desired level). Removal of the device coupled at third connector 56 removes the current drain which may, in an embodiment of the present invention, cause controller 58 to stop requesting inline power from the PSE coupled to first connector 52. Accordingly, switches Sl, S2, S3 and S4 would then close and switch SS would open so that data was conducted between connectors 52 and 54.” Karam ’799 at [057]. “Turning now to FIG. 5, an alternative 70 to the circuit of FIG. 4A is illustrated in electrical schematic diagram form. In accordance with this version four pairs of conductors couple a first port 72 to a second port 74 in a dongle device providing accessory power at a third port 76. The 7-8 pair and the 4-5 pair are wired straight through from first port 72 to second port 74 as shown. The 3-6 pair is, in one embodiment, the transmit pair in a 10/100 Base T implementation and carries the 48V return inline power signal and data and has a center-tapped magnetic device Tl (such as a transformer or appropriate inductors) disposed in the transmit pair between first port 72 and second port 74. Pin 6 of the magnetic device Tl is coupled to control circuitry 78 at node 80, then through a current sensor 81 (such as a current sense resistor or other form of current sensor) to node 82 and then through a diode 84 to node 86. Power used by third port 76 will have its current measured by sensor 81. Switch 88 under control of control circuitry 78 and node 86 provide power to third port 76 which can be used, for example, to power an accessory device such as a portable telephone, small computing device, or the like. Pin 4 of magnetic device Tl is coupled through a switch 90 and a current sensor 92 to the control circuitry 78. An optional magnetic device T2 (which may be a center-tapped transformer or inductors as described above in connection with magnetic device Tl)

		is coupled to the 1-2 pair which (in the IEEE 802.3af standard) is the -48 VDC inline power leg. Inline power is provided to the third port 76 by closing switch 88 (it may be a normally closed switch). If a keyed connector is used it may be possible to eliminate switch 88. If the control circuitry 78 sees that power is applied and then the current in current sensor 92 goes to zero (device at second port 74 is off or disconnected) while current is still being used by third port 76 then it forces normally closed switch 90 to open making sure that a "hot cable" situation is not created at second port 74 by removing the inline power to second port 74. To provide inline power again to second port 74 the control circuitry 78 must identify the presence of an appropriate identity network across the 1-2 pair and the 3-6 pair. This may be achieved, for example, by control circuitry 78 reducing the applied voltage and closing switch 90 to carry out a conventional inline power discovery process which may also be followed up by a classification process, if desired in the particular application." Karam '799 at [0058]. 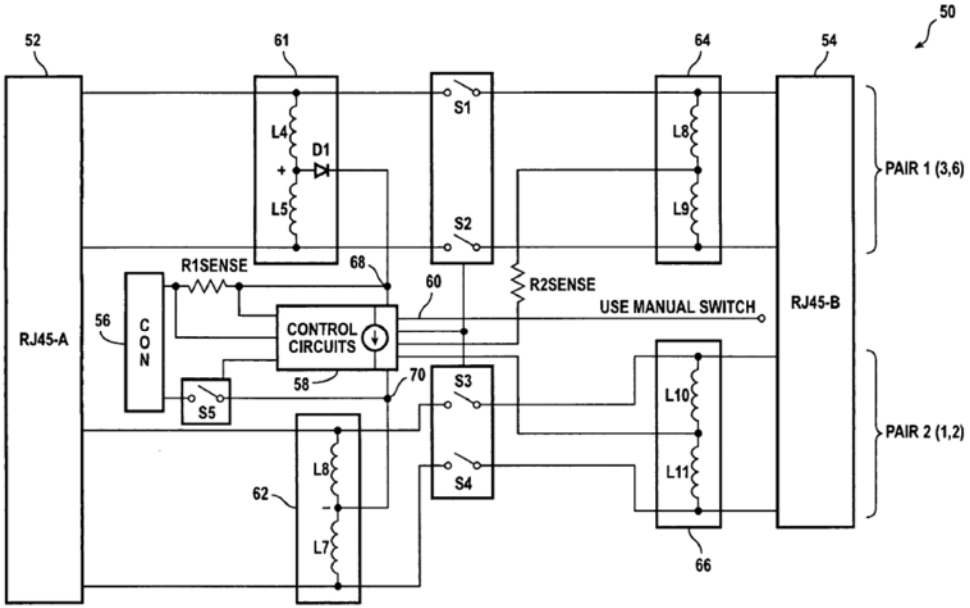 *FIG. 4A* Karam '799 at Fig. 4A.

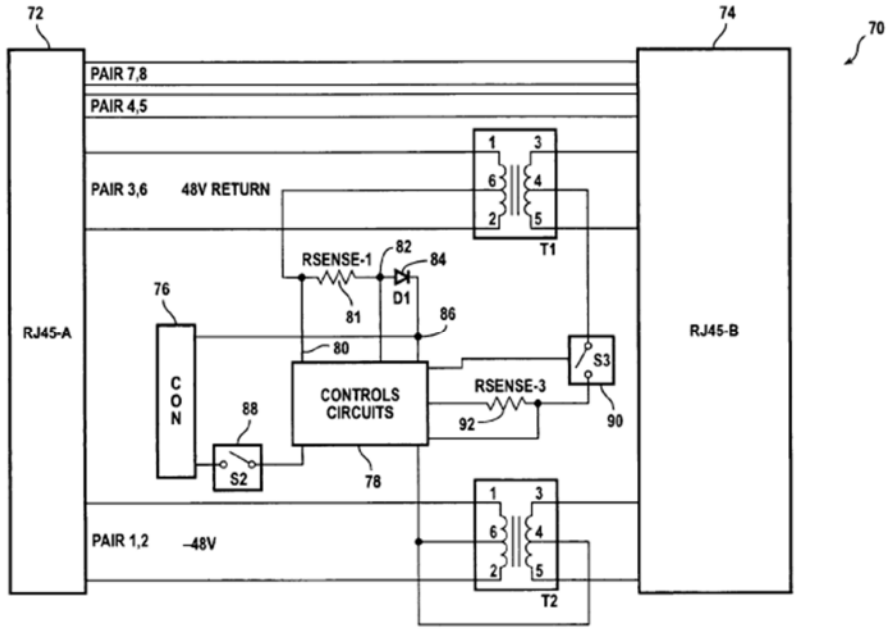

FIG. 5

Karam ’799 at Fig. 5.

To the extent that Plaintiff contends that Karam ’799 does not explicitly or inherently disclose this element, or render obvious this element, this element is obvious in combination with one or more references and/or with the knowledge of a person of ordinary skill in the art, as set forth in Defendant’s Invalidity Contentions.

Claim 7		
7[p]	A method of delivering power to one of a plurality of devices connected in a daisy chain, the method comprising:	To the extent the preamble is limiting, Karam ’799 discloses this element and/or renders it obvious either alone or in combination with other references and/or the knowledge of one of ordinary skill in the art. *See, e.g.*: “The present invention is directed to a method and apparatus for managing an Inline Power relationship between a network device and a Powered Device (PD) where the network device is acting as power sourcing equipment (PSE) to provide Inline Power to a first PD (PD1) which is, in turn, powering another PD (PD2)….The various relationships are briefly diagrammed in FIG. 2A. In the block diagram of FIG. 2A, a network device 30 configured as PSE is coupled via a first link 32 to a network 34. Link 32 may be any appropriate network link such as Ethernet, fiber, wireless, Satellite, terrestrial broadband wireless, digi-tal subscriber line (DSL) and the like. Network 34 may be a local area network (LAN) such as in an office; a metro-politan area network (MAN) or a wide area network (WAN) such as the Internet or a corporate Intranet or the like.” Karam ’799 at [0039]. “FIG. 2B is a diagram ofa system comprising a PSE and a first PD (PDl) and a second PD (PD2). A single 8-conductor cable can couple power and data (or just power) from the PSE to PDl. In the embodiment of FIG. 2B, a first cable having four pairs of conductors couples PDl to the PSE and a second such cable couples PD2 to PDl. PDl receives power and data from the PSE over the pair 3, 6 and pair 1, 2 (4 conductors). Pair 4, 5 and pair 7, 8 pass through PDl. PD2 is connected to PDl, for example with an RJ-45 type connector, and receives data over pair 3, 6 and pair 1, 2. Power is provided to PD2 over inline power provided on pairs 4, 5 and 7, 8. In accordance with this embodiment, data is not provided to PD2 over the pairs 4, 5 and 7, 8. An optional “potential data path” as shown may be provided for communications (if needed) between PDl and PD2. This could be a wireless connection, a common mode data communication path, an Ethernet data connection, or the like. The PSE shown may be a single PSE or a pair of PS Es associated with the same port of a network device or other PSE-type device. Note that typical 10/100 Base T Ethernet utilizes the 3, 6 and the 1, 2 pairs of an 8 conductor Ethernet cable. The 4, 5 and 7, 8 pairs are normally unused in this application although they are used in 1000 Base T (and higher) Ethernet.” Karam ’799 at [0044]. “In FIG. 2D an arrangement is shown where a PSE provides power and data to three PDs: PDl, PD2 and PD3. This is again accomplished over a series of single 8 con-ductor (4 pair) cables daisy-

		chained between the various devices. Pair 3, 6 and pair 1, 2 provide data connectivity to PDl (via a first cable coupling the PSE and PDl), then to PD2 (via a second cable coupling PDl and PD2), then to PD3 (via a third cable coupling PD2 and PD3). These pairs also provide inline power to PDl. Power is provided to PD2 and PD3 as follows. For example, an inline power signal is provided between pair 4,5 (+) and pair 7, 8 (-). PD2 takes its power by coupling to conductors 4(+) and 7(-) (although others could be used) and PD3 takes its power by coupling to conductors 5(+) and 8(-) (although others could be used). This power coupling may be accomplished through an inductor (to provide a high-impedance AC (alternating cur-rent) path) or directly without an inductor (since there is no data on these lines). A potential data path may couple PDl and PD3 as shown (or other devices), if desired. Such potential data paths may be implemented in any convenient manner." Karam '799 at [0046]. "Turning now to FIG. 4A, another embodiment 50 of the present invention is illustrated in schematic form." Karam '799 at [0050]. "Turning now to FIG. 5, an alternative 70 to the circuit of FIG. 4A is illustrated in electrical schematic diagram form." Karam '799 at [0058]. "1. A method for managing an inline power relationship between a first device, a second device and a third device in a wired data telecommunications network, the first device configured as power sourcing equipment (PSE), the second device having a first power requirement and configured as a powered device (PD) and coupled via at least a first pair of conductors to the first device, and the third device having a second power requirement and coupled via at least a second pair of conductors to the second device…" Karam '799 at c.1. "A device such as that just described would be helpful to people who have a need to charge cellular phones or power other low-power equipment from the inline power available on network cabling. It would also be useful in situations where low-power sensors (such as IP television cameras) need to be wired in a daisy chain configuration and powered from a wired network using inline power." Karam '799 at [0054]. "In FIG. 2D an arrangement is shown where a PSE provides power and data to three PDs: PDl, PD2 and PD3. This is again accomplished over a series of single 8 con-ductor (4 pair) cables daisy-

		chained between the various devices. Pair 3, 6 and pair 1, 2 provide data connectivity to PDl (via a first cable coupling the PSE and PDl), then to PD2 (via a second cable coupling PDl and PD2), then to PD3 (via a third cable coupling PD2 and PD3). These pairs also provide inline power to PDl. Power is provided to PD2 and PD3 as follows. For example, an inline power signal is provided between pair 4,5 (+) and pair 7, 8 (-). PD2 takes its power by coupling to conductors 4(+) and 7(-) (although others could be used) and PD3 takes its power by coupling to conductors 5(+) and 8(-) (although others could be used). This power coupling may be accomplished through an inductor (to provide a high-impedance AC (alternating cur-rent) path) or directly without an inductor (since there is no data on these lines). A potential data path may couple PDl and PD3 as shown (or other devices), if desired. Such potential data paths may be implemented in any convenient manner." Karam '799 at [0046]. 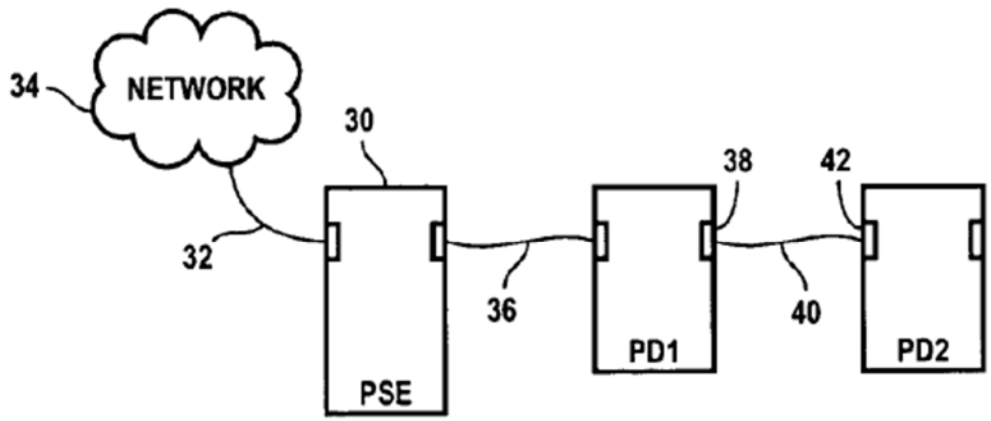 *FIG. 2A* Karam '799 at Fig. 2A.

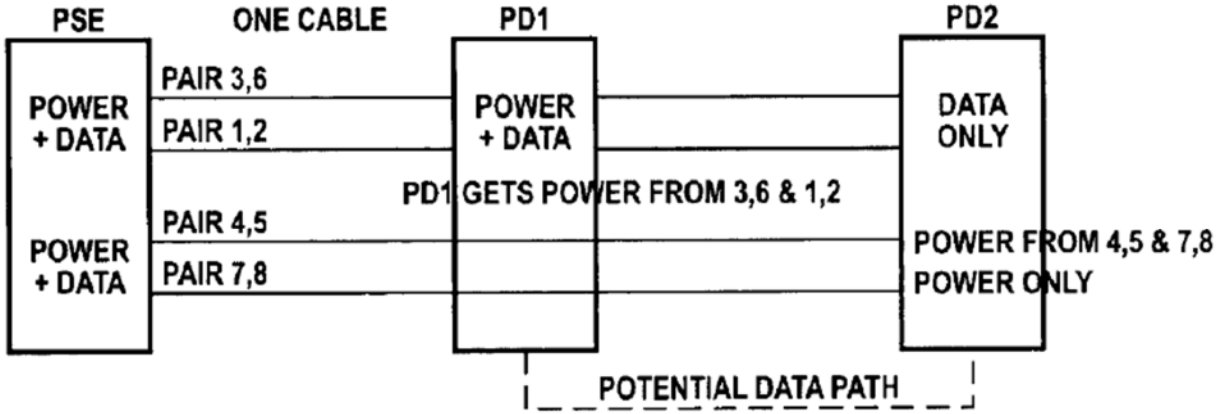

FIG. 2B

Karam ’799 at Fig. 2B.

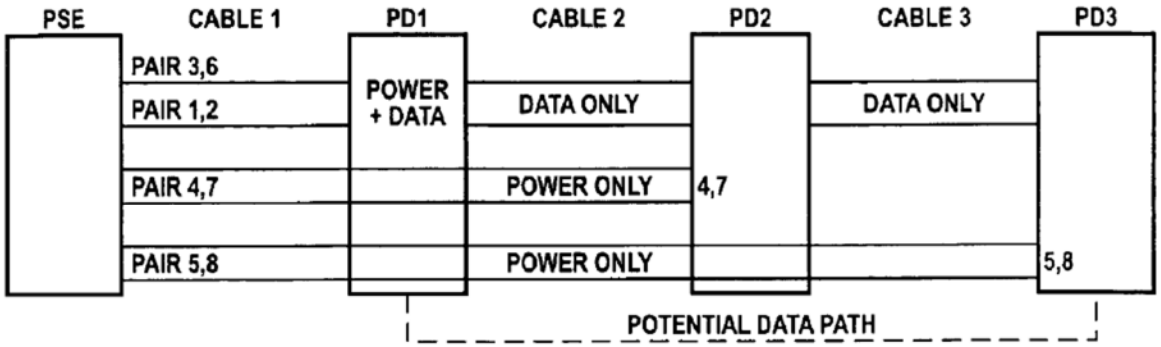

FIG. 2D

Karam ’799 at Fig. 2D.

Exhibit E-2

		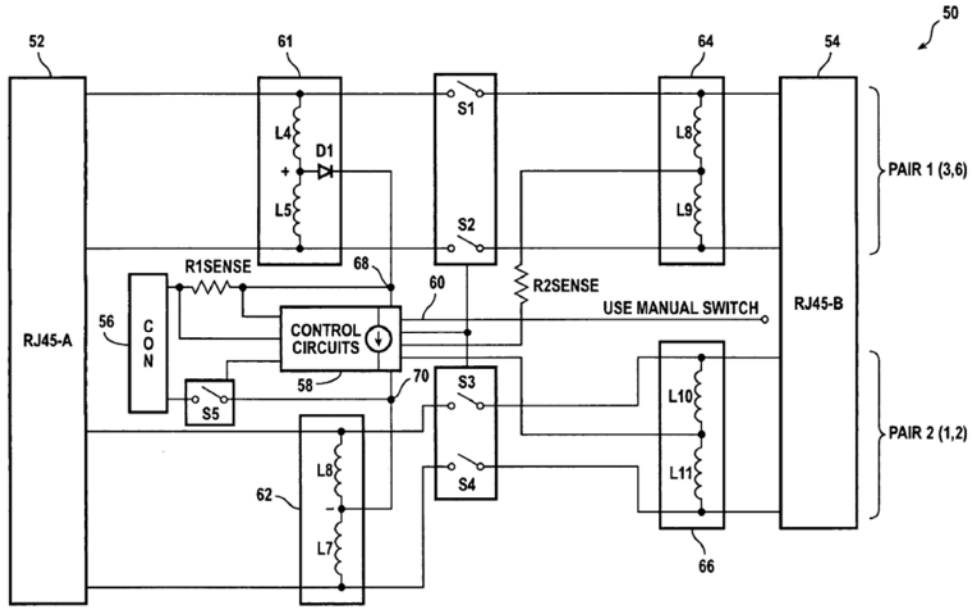 FIG. 4A Karam ’799 at Fig. 4A.

		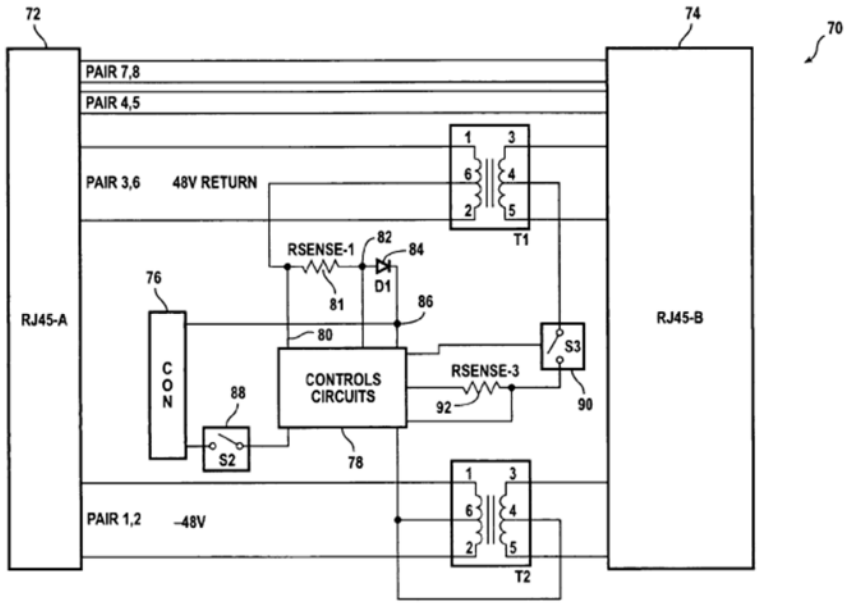 *FIG. 5* Karam ’799 at Fig. 5. To the extent that Plaintiff contends that Karam ’799 does not explicitly or inherently disclose this element, or render obvious this element, this element is obvious in combination with one or more references and/or with the knowledge of a person of ordinary skill in the art, as set forth in Defendant’s Invalidity Contentions.
7(a)	detecting a load in a first device of the plurality of devices including detecting a load current flowing through the load;	Karam ’799 discloses and/or renders obvious this limitation. *See* exemplary disclosures and corresponding discussion for claim element 1(d).

7(b)	extracting information from the first device based on the detected load current; and	Karam ’799 discloses and/or renders obvious this limitation. *See* exemplary disclosures and corresponding discussion for claim element 1(d).
7(c)	relaying power to the first device based on the extracted information;	Karam ’799 discloses and/or renders obvious this limitation. *See* exemplary disclosures and corresponding discussion for claim element 1(b)-1(e).
7(d)	wherein the information extracted comprises information regarding whether the first device is powered on or powered off, and whether or not the first device needs a supply of power.	Karam ’799 discloses and/or renders obvious this limitation. *See* exemplary disclosures and corresponding discussion for claim element 1(e).

Exhibit E-3

Invalidity of the ’712 Patent in View of U.S. Pat. App. Pub. No. 2008/0168283 A1 to Penning (Penning)

This chart provides examples of where the prior art reference discloses, either expressly or inherently, the claim elements of asserted U.S. Patent No. 8,680,712 (“the ’712 patent”). The citations herein are exemplary and are not exhaustive; Defendant has cited the most relevant portions of the identified prior art. For each citation, Defendant hereby incorporates by reference the entire cited prior art reference, and reserves the right to rely on uncited portions of each identified prior art reference. To provide context or identify the state of the art at the time of the alleged invention, Defendant reserves the right to rely on: (1) uncited portions of the identified prior art; (2) other prior art not identified herein; (3) references that show the state of the art (irrespective of whether such references themselves qualify as prior art); (4) factual testimony from the inventors or authors of the prior art references, or purveyors of prior art devices; and (5) expert testimony.

Where Defendant cites a figure, the citation includes any text associated with the figure. Where Defendant cites passages relating to a figure, the citation includes the associated figure any other text associated with that figure. Where Defendant cites particular prior art as disclosing a claim element, that citation equally applies to all identical or similar claim elements in this chart. Defendant reserves the right to further assert that a claim element is inherent, the element would have been obvious to a person of ordinary skill in the art, or the element is disclosed in other prior art that may be combined with the cited prior art. To establish the inherency of certain features of the prior art to invalidate the asserted claims, Defendant may rely on cited or uncited portions of the prior art, other documents, factual testimony, and expert testimony.

This invalidity chart is based on information presently available to Defendant, and the information herein is provided as a non-limiting example.

Penning was filed on January 5, 2007, and published on July 10, 2008; therefore, Penning is prior art under at least 35 U.S.C. § 102(a) and 102(e).

Exhibit E-3

Claim Limitation		Penning
Claim 1		
1[p]	A power delivery circuit configured to deliver power to one or more of a plurality of devices connected in a network, the power delivery circuit comprising:	To the extent the preamble is limiting, Penning discloses this element and/or renders it obvious either alone or in combination with other references and/or the knowledge of one of ordinary skill in the art. *See, e.g.*: "FIG. 1 shows an exemplary configuration 100 including a data distribution device having a plurality of power supplies. Configuration 100 may include a data distribution device 105, an independent power supply 115, a remote data distribution device 110, one or more network devices 125-1-125-N, and one or more externally powered network devices 120-1-120-N." Penning at [0029]. "Data distribution device 105 may exchange data with remote data distribution device 110 over a connection through a wall plate 114. Wall plate 114 may be physically attached to wall 112, and may typically be in local proximity to data distribution device 105 and remote proximity from independent power supply 115. Additionally, operational power for the data distribution device 105 may be provided by remote data distribution device 110 over the same connection used for data through wall plate 114....Data distribution device 105 may also exchange data with one or more externally powered network devices 120-1-120-N and with one or more network device 125-1-125-N. Typically, data distribution device 105 may not provide power to externally powered network devices 120-1-120-N. Data may be exchanged with other devices and/or networks through remote data distribution device 110, and/or may be exchanged with other devices directly connected to data dis-tribution device 105. Additionally, data distribution device 105 may provide power to one or more network devices 125-1-125-N over the same connection used to exchange data, e.g., through an Ethernet connection and PoE. The power for the network device(s) 125-1-125-N originates from the power source that data distribution device 105 has selected. Moreover, data distribution device 105 may sense the amount of power required by one or more network devices 125-1-125-N, and provide power accordingly." Penning at [0030].

		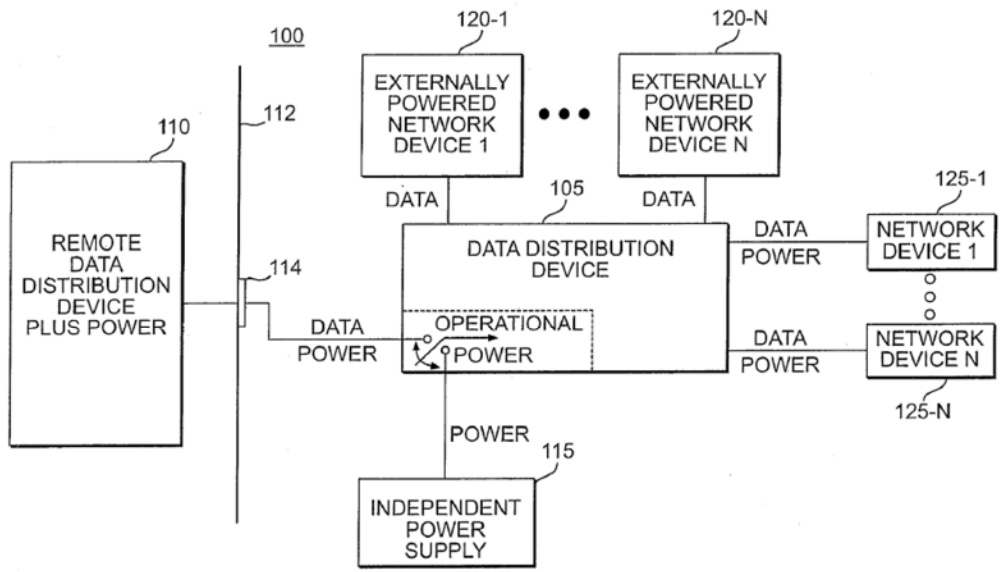 *FIG. 1* Penning at Fig. 1. To the extent that Plaintiff contends that Penning does not explicitly or inherently disclose this element, or render obvious this element, this element is obvious in combination with one or more references and/or with the knowledge of a person of ordinary skill in the art, as set forth in Defendant's Invalidity Contentions.
1(a)	a voltage source configured to generate a voltage;	Penning discloses and/or renders obvious this limitation. *See, e.g.*: "FIG. 1 shows an exemplary configuration 100 including a data distribution device having a plurality of power supplies. Configuration 100 may include a data distri-bution device 105, an independent power supply 115, a remote data distribution device 110, one or more network devices 125-1-125-N, and one or more externally powered network devices 120-1-120-N." Penning at [0029].

		"Data distribution device may select from one of a plurality of power supplies to supply its own internal power, and/or to supply power to one or more network devices 125-1-125-N. The switching of power supplies for the data distribution device may be performed using relays, transistors, or any other known switching devices. Details of one hardware switching approach are presented below in the description of FIG. 3. For sake of clarity, only two sources of power are illustrated in FIG. 1. As shown, data distribution device 105 may select power from independent power supply 115 or from remote data distribution device 110. The power selection may be based upon pre-defined logic rules within data distribution device 105, and can be based upon the source of incoming power and/or the maximum available power from each power source. For example, if only one source of power is present, then data distribution device 105 will utilize that source for internal power. If both remote data distribution device 110 and independent power supply 115 are supplying power, logic within data distribution device may switch to using power from independent power supply 115 to reduce the power draw from remote data distribution device 110, as it may be powering other devices over other Power over Ethernet (PoE) network connections (not shown). Alternatively, or in addition, a manual switch may be provided permitting the user the ability to manually select power supplies. This configuration may be particularly useful where the network device is an endpoint device, such as a VoIP phone with multiple power supplies and/or additional modular connections supporting various auxiliary devices, e.g., such as a USB port." Penning at [0032].

		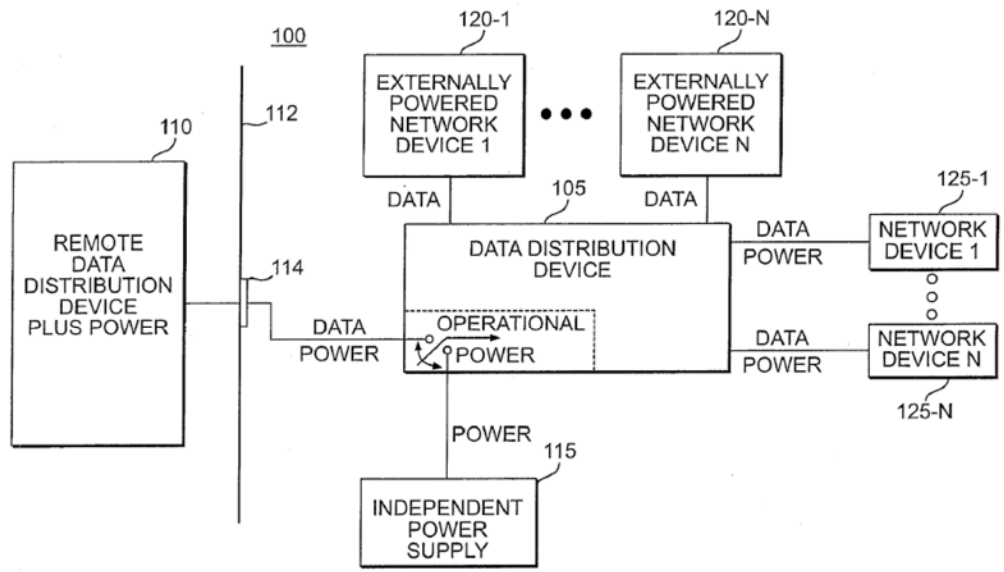 *FIG. 1* Penning at Fig. 1. To the extent that Plaintiff contends that Penning does not explicitly or inherently disclose this element, or render obvious this element, this element is obvious in combination with one or more references and/or with the knowledge of a person of ordinary skill in the art, as set forth in Defendant's Invalidity Contentions.
1(b)	a power relay switch configured to relay, when closed, the voltage generated by the voltage source to one or more of the connected devices;	Penning discloses and/or renders obvious this limitation. *See, e.g.*: "Additionally, operational power for the data distribution device 105 may be provided by remote data distribution device 110 over the same connection used for data through wall plate 114. Alternately, data distribution device 105 may select power over a dedicated power line connected to independent power supply 115. Data distribution device 105 may make this selection using an internal switch, the details of which are presented below." Penning at [0030].

		"Data distribution device may select from one of a plurality of power supplies to supply its own internal power, and/or to supply power to one or more network devices 125-1-125-N. The switching of power supplies for the data distribution device may be performed using relays, transistors, or any other known switching devices….If both remote data distribution device 110 and independent power supply 115 are supplying power, logic within data distribution device may switch to using power from independent power supply 115 to reduce the power draw from remote data distribution device 110, as it may be powering other devices over other Power over Ethernet (PoE) network connections (not shown). Alternatively, or in addition, a manual switch may be provided per-mitting the user the ability to manually select power supplies. This configuration may be particularly useful where the network device is an endpoint device, such as a VoIP phone with multiple power supplies and/or additional modular connections supporting various auxiliary devices, e.g., such as a USB port." Penning at [0032]. "Once process controller 340 determines which power supply to select, the selection may occur by process controller 340 sending a command signal to switch 380. Switch 380 may be a relay, one or more transistors, or any other type of switch which may be controlled by an electronic signal...If process controller 340 selects independent power supply 115, it may open switch 380 so that current flows through a diode assembly 385 to a Power Sourcing Equipment (PSE) controller and Power Controller 370, hereinafter referred to as PCPC 370. If process controller 340 selects PoE power over uplink port 320, process controller 340 may close switch 380, and current from uplink port 320 will flow through diode assembly 385 into PCPC 370. Note that the voltage of independent power supply 115 may be chosen so, that if the independent power supply 115 is present and providing power, the appropriate diodes are back-biased, allowing current to flow from uplink port 320 into PCPC 370, and blocking current from independent power supply 115." Penning at [0051]. "Process controller 340 may also provide control signals to PCPC 370 which may include instructions for providing the appropriate amount of power to VoIP telephone 215. Initially, PCPC 370 may first sense the power VoIP telephone 215 is requesting by measuring the signature resistance presented at powered port 315 by VoIP telephone 215. This may be done in accordance with PoE standard 802.3af. Once the power signature is requested, which may be class 0, 1, 2, or 3, process controller 340 may instruct the power controller in PCPC 370 to provide powered port 315

		with the appropriate amount of power for use by VoIP telephone 215. This power may be provided over powered port 315 using PoE." Penning at [0053]. "Once process controller 340 determines which power supply to select, the selection may occur by process controller 340 sending a command signal to switch 380. Switch 380 may be a relay, one or more transistors, or any other type of switch which may be controlled by an electronic signal. Alternatively, or in addition, the network device may include a manual switch that may be provided to permit the user to manually control the power supply, e.g., further described with respect to an exemplary embodiment shown in and described in connection with FIGS. 4-7K. If process controller 340 selects independent power supply 115, it may open switch 380 so that current flows through a diode assembly 385 to a Power Sourcing Equipment (PSE) controller and Power Controller 370, hereinafter referred to as PCPC 370. If process controller 340 selects PoE power over uplink port 320, process controller 340 may close switch 380, and current from uplink port 320 will flow through diode assembly 385 into PCPC 370. Note that the voltage of independent power supply 115 may be chosen so, that if the independent power supply 115 is present and providing power, the appropriate diodes are back-biased, allowing current to flow from uplink port 320 into PCPC 370, and blocking current from indepen-dent power supply 115." Penning at [0051].

		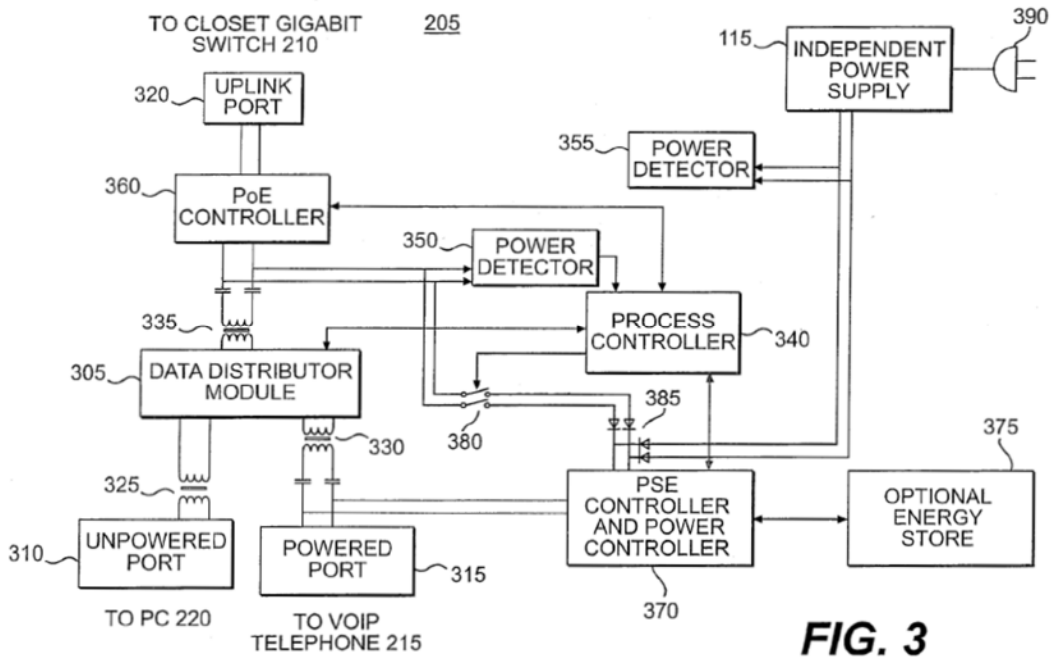 Penning at Fig. 3. To the extent that Plaintiff contends that Penning does not explicitly or inherently disclose this element, or render obvious this element, this element is obvious in combination with one or more references and/or with the knowledge of a person of ordinary skill in the art, as set forth in Defendant's Invalidity Contentions.
1(c)	a signature resistor connected to the switch and configured to detect a power source from one or	Penning discloses and/or renders obvious this limitation. *See, e.g.*: "Since the independent power supply 115 is present in this configuration, gigabit switch 205 may sense power present at independent power supply 115 and select power from this source for use as operational power, and may not select PoE power from closet gigabit switch 210. Addition-ally, gigabit switch 205 may initially determine how much power VoIP telephone 215 requires using

	more of the connected devices; and	standard 802.3af sensing techniques, and subsequently supply power to VoIP telephone 215 using standard 802.3af PoE." Penning at [0043]. "FIG. 2B depicts another configuration 200B of giga-bit switch 205 which does not have an independent power supply connected thereto. Here, gigabit switch 205 would not sense power coming from the independent power supply, and would select power from closet gigabit switch 210. Upon initialization, closet gigabit switch 210 can determine how much operation power gigabit switch 210 requires utilizing 802.3af techniques, and allocate and supply the appropriate power amount over the same physical connection used for exchanging data. As described above, gigabit switch 205 can in-tum provide power to VoIP telephone 215 using 802.3af PoE as described above, although the power would be sourced from closet gigabit switch210 in configuration 200B. As described above gigabit switch 205 may initially deter-mine how much power VoIP telephone 215 requires using standard 802.3af sensing techniques, and subsequently sup-ply the requested power thereto. The operation of gigabit switch 205 with respect to data communication would be the same as described above for configuration 200A shown in FIG. 2A. One of ordinary skill in the art would appreciated that configuration 200B may also support the configuration where independent power supply 115 is present, but for what-ever reason(s), is not providing power to gigabit switch 205. In this case, power from closet gigabit switch 210 may serve as backup power for the independent power supply 115." Penning at [0044]. "Process controller 340 may also receive signals from power detectors 350 and 355 which may indicate a source of power, and based upon these signals, process controller may select a power source through switch 380. Power detectors may be either voltage or current detectors, and may be of any appropriate type known to one of ordinary skill in the art. Over uplink port 320, power may be received using IEEE 802.3af PoE standards, which can be supplied by closet gigabit switch 210. If power is present at this port, power detector 350, which may connected to outputs coming from PoE controller 360, will sense the power signal from uplink port 320, and send a signal notifying process controller 340 that the closet gigabit switch 210 is providing a power signal. Similarly, power detector 355 may sense a power signal provided by independent power supply 115, which may be fed power through standard A/C wall socket over plug and connector 390. Power sensor 355 will then send a signal to process controller 340 that independent power supply 115 is providing a power signal which may be used for operational power. As discussed above, independent power supply could be any known power source, and additional independent power supplies may be

		utilized, along with additional power sensors, to accommodate additional power supply sources. Additional details of exemplary gigabit switches 205 and control logic are described in further detail in U.S. patent application Ser. No. 11/541,788, entitled APPARATUS AND METHODS FOR DATA DISTRIBUTION DEVICES HAVING SELECTABLE POWER SUPPLIES, filed on Oct. 3, 2006, the entirety of which is hereby incorporated by reference." Penning at [0049]. "Process controller 340 may provide a signal to PoE controller 360 in order to provide feedback to closet gigabit switch 210 regarding how much power to allocate and supply to gigabit switch 205. PoE controller 360 may set up a signature resistance in accordance with IEEE 802.3af, to signal a class 0, 1, 2, and/or 3 power signatures. The signature resistance may be sensed by closet gigabit switch 210 during initialization so the appropriate amount of power is provided to gigabit switch 205." Penning at [0052]. "Initially, process controller 340 may scan each power detector 350 and 355 for an active power signal. Process controller 340 may then make the determination if power is present on power detector 355, which monitors power signals coming from independent power supply 115. If power is present on power detector 355, process controller 340 may source power from independent power supply 115. This can be accomplished by having process controller 340 send a signal to switching circuit 380 to open and prevent current from flowing from uplink port 320. Process controller 340 may then send another signal to PoE controller 360, which can set a signature resistance on uplink port 320 (in accordance with IEEE 802.3af standards) for signaling closet gigabit switch 210 that gigabit switch 205 does not require any power over the data line through uplink port 320. Alterna-tively, or additionally, power detector 350 may signal process controller 340 that power is present on uplink port 320, pro-cess controller 340 may send a signal to PoE controller 360 to configure the signature resistance across uplink port 320, so that it will signal closet gigabit switch 210 to allocate and offer power to gigabit switch 205 (S430)." Penning at [0056]. "The PoE controller may signal the process controller various conditions, which may include normal status, overload, instability of voltage source, voltage sag and others." Penning at [0052]. "Process controller 340 may also provide control signals to PCPC 370 which may include instructions for providing the appropriate amount of power to VoIP telephone 215. Initially, PCPC 370 may first sense the power VoIP telephone 215 is requesting by measuring the signature

		resis-tance presented at powered port 315 by VoIP telephone 215. This may be done in accordance with PoE standard 802.3af. Once the power signature is requested, which may be class 0, 1, 2, or 3, process controller 340 may instruct the power controller in PCPC 370 to provide powered port 315 with the appropriate amount of power for use by VoIP telephone 215. This power may be provided over powered port 315 using PoE. The PSE controller 370 may collect requested powering information from the device (215) connected to powered port 315 and report that information to Process Controller 340 for various purposes, including reporting back to the closet switch 210 via PoE Controller 360 for power of switch 205." Penning at [0053]. "The amount of power offered may depend on the value of the signature resistance value presented by PoE controller 360 (which may be based upon IEEE 802.3af standards). Process controller 340 may then source power from the closet gigabit switch 210 over uplink port 320. This may occur by having process controller 340 signal switching circuit 380 to close, thus allowing current to flow through diode arrangement 385. Independent power supply 115 may be configured so that the two diodes in series with its current supply will be back-biased when power is being supplied through uplink port 320, thus providing a way to economi-cally and effectively block the power being supplied by inde-pendent power supply 115." Penning at [0057]. "In addition, the VoIP phone 400 may include a USB port 415 and USB interface 450 for connecting a variety of peripheral devices, such as, for example, memory devices, cellular telephones, personal digital assistants (PDAs), and/or night lights. Although many peripheral devices connecting through the USB port 415 may be provided with independent or integrated power supplies, some peripheral devices may draw power through the VoIP phone 400, such as for charging the internal power supply of a PDA connected through the USB port 415. Peripheral devices drawing power through the USB port 415 may draw varying amounts of power, e.g., typically 2.5 W or less, through the VoIP phone 400 and the power source being used by the VoIP phone 400, e.g., through an AC/DC wall adapter if connected through connection 420 or through the Ethernet (PoE)." Penning at [0061]. "If the VoIP phone 400 is being powered in a PoE mode, power supply issues may arise for the VoIP phone 400 and/or the network to which the VoIP phone 400 is connected to and drawing power. For example, if a user plugs a periph-eral device into the USB port 415, such as a PDA that recharges an internal battery while connected through the USB port 415, one or more power supply

		issues may arise if the VoIP phone 400 is receiving PoE. If the VoIP phone 400 is only receiving enough power from the PoE source to power the VoIP phone 400, the addition of peripheral devices can overload and/or damage the power supply of the PoE, over-heat the network connections or cables, and/or cause unex-pected drops in the voltage level of the PoE that may lead to software errors and/or resetting of one or more other net-worked devices, including the VoIP phone 400. Alternatively, the user may require faster data transfer rates through the VoIP phone 400, which may necessitate operating off of an independent power supply, e.g., so that all of the twisted pairs of the Ethernet connection are being utilized for data transfer and not data and PoE." Penning at [0062]. "Accordingly, the VoIP phone may include one or more power detectors 430, a power controller 435 for executing software for detecting the power source and designating a power signature for the VoIP phone 400, and/or a PoE power signature switch 436 enabling the user and/or software to manually adjust the power signature, e.g., PoE power classi-fication 0, 1, 2, 3 and/or 4." Penning at [0063]. "The switch 436 on the VoIP phone 400 provides the user with the ability to change the "power signature" that the phone presents to the Ethernet switch that provides PoE. The IEEE 802.3af standard allows for distinct power consumption levels, numbered O thru 3, with 3 being the highest consump-tion. The phone may therefore be equipped with hardware circuitry in accordance with the IEEE 802.3af standard to indicate which of the power levels is required." Penning at [0093].

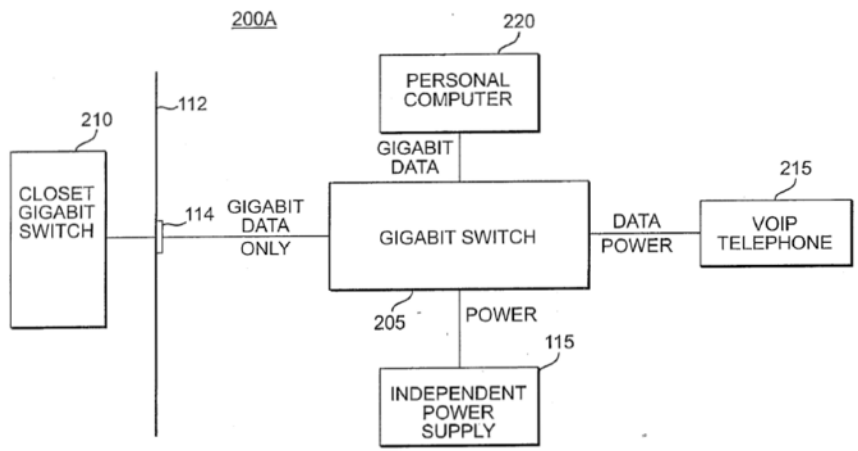

FIG. 2A

Penning at Fig. 2A.

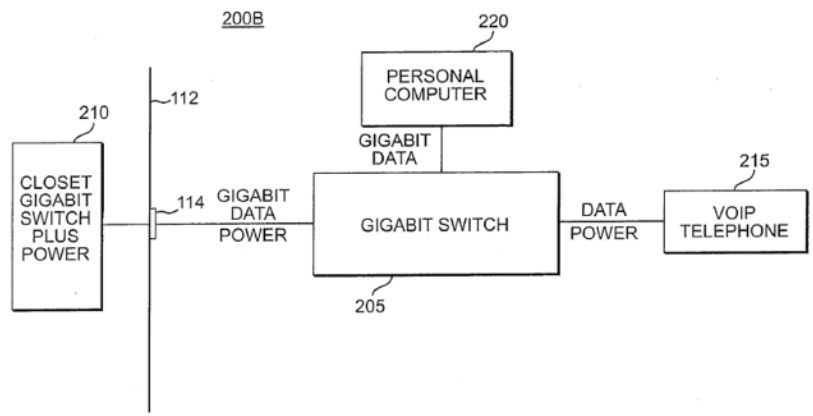

FIG. 2B

Penning at Fig. 2B.

Exhibit E-3

		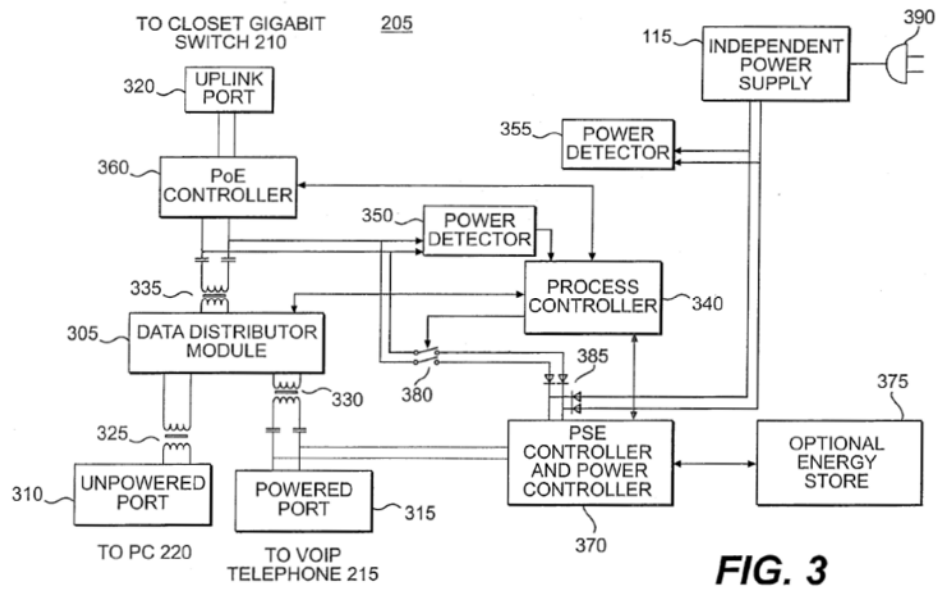 Penning at Fig. 3.

		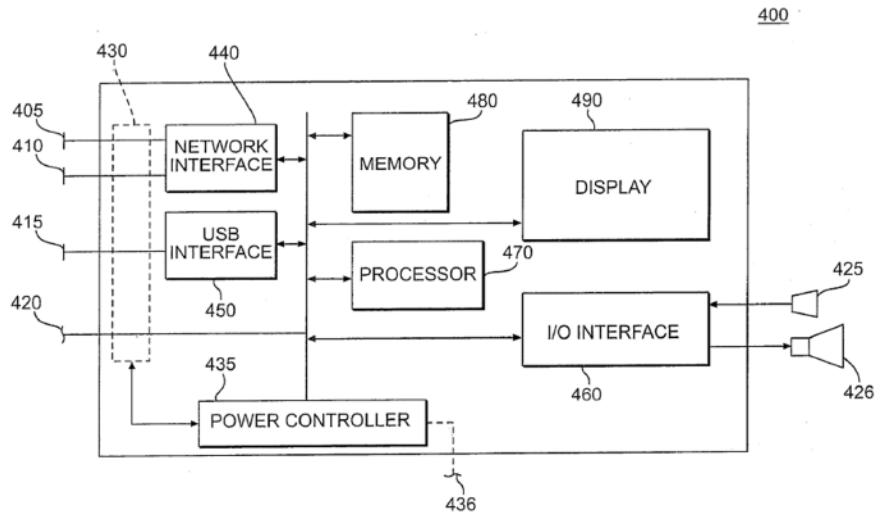 FIG. 4 Penning at Fig. 4. To the extent that Plaintiff contends that Penning does not explicitly or inherently disclose this element, or render obvious this element, this element is obvious in combination with one or more references and/or with the knowledge of a person of ordinary skill in the art, as set forth in Defendant's Invalidity Contentions.
1(d)	a load detector connected to the switch and configured to read a load current flowing therethrough so as to detect a load in one of the connected devices, and to extract information about the connected device based on the load current;	Penning discloses and/or renders obvious this limitation. *See, e.g.*: "The resistive signature may be in accordance with signatures associated with any class prescribed by 802.3af, including, for example, Class 0, 1, 2, and/or 3 power signatures." Penning at [0033]. "Data distribution device 105 may in turn provide power to network devices 125-1-125-N over the same physi-cal media used to exchange data, and may use IEEE 802.3af PoE standards, or any other power over data line techniques known in the art. In accordance with the 802.3af standard, data distribution device 105 may first sense how much power network devices 125-1-125-N require for proper operation, and allocate and/or offer power in accordance with the sensed requirements. Various techniques used to sense the power requirements may be utilized, particularly hardware

		circuitry defined according to IEEE 802.3af standards, and/or and may include Class 0, 1, 2, and/or 3 power signatures. Moreover, data distribution device 105 may provide a different power signature to remote distribution device 110 than data distri-bution device 105 receives from one or more network devices 125-1-125-N. Furthermore, the power signature which may be provided by the data distribution device 105 to the remote data distribution device 110 may not depend upon the value or presence of any other power signature request received by the data distribution device 105 from one or more network devices 125-1-125-N." Penning at [0035]. "Process controller 340 may also receive signals from power detectors 350 and 355 which may indicate a source of power, and based upon these signals, process controller may select a power source through switch 380. Power detectors may be either voltage or current detectors, and may be of any appropriate type known to one of ordinary skill in the art. Over uplink port 320, power may be received using IEEE 802.3af PoE standards, which can be supplied by closet gigabit switch 210. If power is present at this port, power detector 350, which may connected to outputs coming from PoE controller 360, will sense the power signal from uplink port 320, and send a signal notifying process controller 340 that the closet gigabit switch 210 is providing a power signal. Similarly, power detector 355 may sense a power signal provided by independent power supply 115, which may be fed power through standard A/C wall socket over plug and connector 390. Power sensor 355 will then send a signal to process controller 340 that independent power supply 115 is providing a power signal which may be used for operational power. As discussed above, independent power supply could be any known power source, and additional independent power supplies may be utilized, along with additional power sensors, to accommodate additional power supply sources. Additional details of exemplary gigabit switches 205 and control logic are described in further detail in U.S. patent application Ser. No. 11/541,788, entitled APPARATUS AND METHODS FOR DATA DISTRIBUTION DEVICES HAVING SELECTABLE POWER SUPPLIES, filed on Oct. 3, 2006, the entirety of which is hereby incorporated by reference." Penning at [0049]. "Process controller 340 may provide a signal to PoE controller 360 in order to provide feedback to closet gigabit switch 210 regarding how much power to allocate and supply to gigabit switch 205. PoE controller 360 may set up a signature resistance in accordance with IEEE 802.3af, to signal a class 0, 1, 2, and/or 3 power signatures. The signature resistance may be sensed by closet gigabit switch 210 during initialization so the appropriate amount of power is provided to gigabit switch 205." Penning at [0052].

		"Process controller 340 may also provide control signals to PCPC 370 which may include instructions for providing the appropriate amount of power to VoIP telephone 215. Initially, PCPC 370 may first sense the power VoIP telephone 215 is requesting by measuring the signature resis-tance presented at powered port 315 by VoIP telephone 215. This may be done in accordance with PoE standard 802.3af. Once the power signature is requested, which may be class 0, 1, 2, or 3, process controller 340 may instruct the power controller in PCPC 370 to provide powered port 315 with the appropriate amount of power for use by VoIP telephone 215. This power may be provided over powered port 315 using PoE. The PSE controller 370 may collect requested powering information from the device (215) connected to powered port 315 and report that information to Process Controller 340 for various purposes, including reporting back to the closet switch 210 via PoE Controller 360 for power of switch 205." Penning at [0053]. "Initially, process controller 340 may scan each power detector 350 and 355 for an active power signal. Process controller 340 may then make the determination if power is present on power detector 355, which monitors power signals coming from independent power supply 115. If power is present on power detector 355, process controller 340 may source power from independent power supply 115. This can be accomplished by having process controller 340 send a signal to switching circuit 380 to open and prevent current from flowing from uplink port 320. Process controller 340 may then send another signal to PoE controller 360, which can set a signature resistance on uplink port 320 (in accordance with IEEE 802.3af standards) for signaling closet gigabit switch 210 that gigabit switch 205 does not require any power over the data line through uplink port 320. Alterna-tively, or additionally, power detector 350 may signal process controller 340 that power is present on uplink port 320, process controller 340 may send a signal to PoE controller 360 to configure the signature resistance across uplink port 320, so that it will signal closet gigabit switch 210 to allocate and offer power to gigabit switch 205 (S430)." Penning at [0056]. "The VoIP phone 400 may include one or more power detectors 430 for sensing the presence of power through one of the power sources, e.g., whether the VoIP phone 400 is receiving power through the AC/DC wall adapter connection 420 or through PoE. The power detector 430 may include a sensor or sensors for detecting the flow of current through each of the various power connections, e.g., a donut-shaped coil surrounding each conducting wire(s) or conducting pin passing through the coil." Penning at [0063].

		"In addition, or alternatively, the power detector 430 may include a sensor or sensors determining if a peripheral device connected through the USB port 415 is drawing power through the VoIP phone and USB interface 450. The power detector 430 may include sensors for each power source and/or for each USB port 415 provided on the VoIP phone 400. For example, if the VoIP phone 400 is provided with an Ethernet port 405, an AC/DC adapter connection 420 (or AC power connection with internal AC/DC transformer within the VoIP phone 400), and a pair ofUSB ports 415, the power detector 430 may include four independent sensors config-ured to detect current levels or power through the respective connections. Alternatively, the power detector 430 may include an integrated power detection module (as shown in FIG. 4) detecting current and/or power for each power source and device drawing power through the VoIP phone 400. Accordingly, one or more of the sensors may be configured to only detect current flow and/or actually measure current pass-ing through the sensor, e.g., such as a donut-shaped coil surrounding the conducting wire and configured to detect and measure current passing through the conducting wire in a manner similar to a FLUKE™ clamp meter." Penning at [0065]. "The power controller 435 determines the presence of current flowing within the powering wire of the USB port 415, e.g., to determine the active power source, and/or mea-sures a total power or current draw for the VoIP phone 400 and any peripheral devices connected through the USB port 415, e.g., to determine the total power consumption for the VoIP phone 400. Alternatively, or in addition, the power controller 430 may determine the collective power draw of the VoIP phone 400, including any adapters, modules, and/or periph-eral devices, each time the VoIP phone 400 is reset and/or each time an adapter, module, and/or peripheral device is connected or disconnected from the VoIP phone 400. The power controller 430 and/or processor 470 may monitor the USB port 415 and enable or disable the USB port 415 based upon actual real time power usage measurements at the USB port 415. Accordingly, the remainder of the network is protected from over current situations, such as when operating the VoIP phone 400 off of PoE." Penning at [0066]. "The evaluation of the active power source (step 510) may include the use of power detection sensor(s) 430 which determine if power is being provided through any one of network connections 405, 410, and/or through the indepen-dent power supply connection 420, e.g., through an AC/DC adapter. The power detection sensors 430 may simply detect the presence of a current and/or may also measure the flow of current to calculate the actual power being supplied and the actual power

		source, e.g., PoE or through an AC/DC adapter. The network device may be provided with hardware circuitry, such as the power controller 435, which designates the power signature of the VoIP phone 400 and all of the associated auxiliary devices. For example, if the switch 436 is manually set to a class 3 power setting, the network and the VoIP phone 400 may automatically designate the total power being pro-vided as being a class 3 power source. Alternatively, or in addition, the VoIP phone 400 may be manually set, such as through a switch or graphical user interface to operate in a PoE mode or an AC/DC adapter (independent power supply) mode." Penning at [0068]. "When determining the required power for the VoIP phone 400, the power controller 435 may measure actual current flow or power draw for each auxiliary device, e.g., for each module, adapter, and/or peripheral device connected with the VoIP phone 400, e.g., with one or more power detec-tion sensors 430. Alternatively, or in addition, the power controller 435 may assign default values, such as a maximum power consumption value for a device, to one or more auxil-iary devices. For example, if the VoIP phone 400 is connected with an adapter or peripheral device, such as a USB device through USB port 415, the power controller 435 may auto-matically assign the maximum power consumption value for a USB device through the USB port 415 to a maximum value, e.g., 2.5 Watts. The determination of the total available power (step 520) and the determination of the total required power (step 530) may occur simultaneously, subsequently, and/or in reverse order from that shown in FIG. 5." Penning at [0070]. "The switch 436 on the VoIP phone 400 provides the user with the ability to change the "power signature" that the phone presents to the Ethernet switch that provides PoE. The IEEE 802.3af standard allows for distinct power consumption levels, numbered O thru 3, with 3 being the highest consump-tion. The phone may therefore be equipped with hardware circuitry in accordance with the IEEE 802.3af standard to indicate which of the power levels is required. In a stand-alone mode, e.g., no adapters, the phones may fall into Class 2 power consumption. However, with the addition of adapt-ers, etc. the phone may move into Class 3 power require-ments. The power switch may then be used to switch in the hardware circuit to present a Class 3 signature to the Ethernet switch, such as gigabit switch 205. " Penning at [0093].

Exhibit E-3

		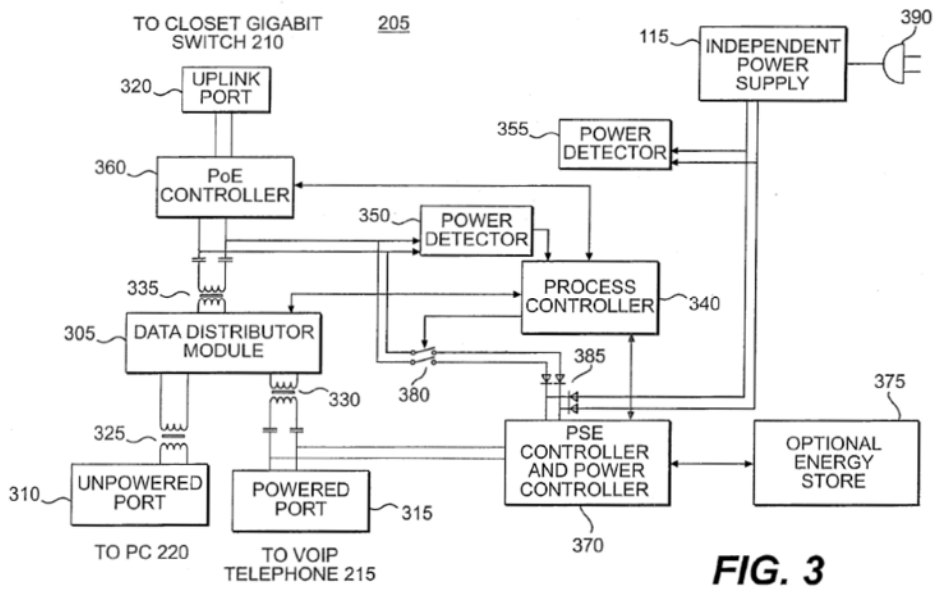 Penning at Fig. 3.

		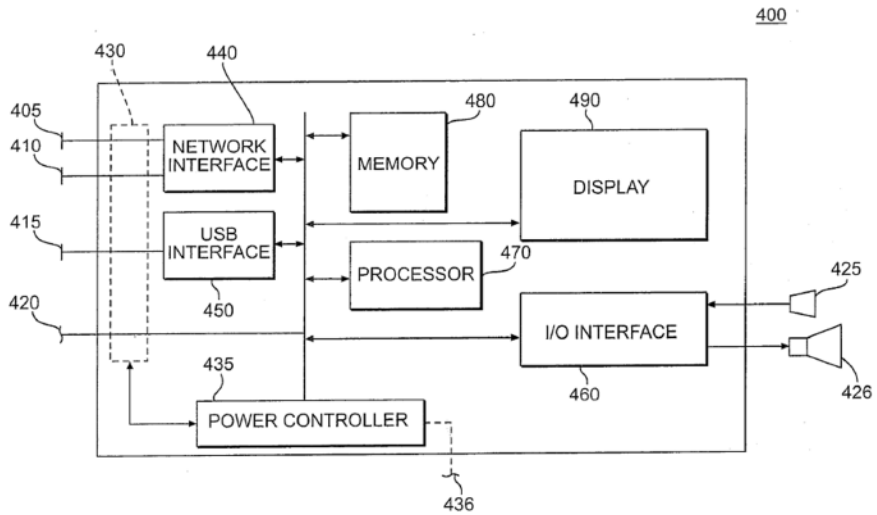 *FIG. 4* Penning at Fig. 4.

		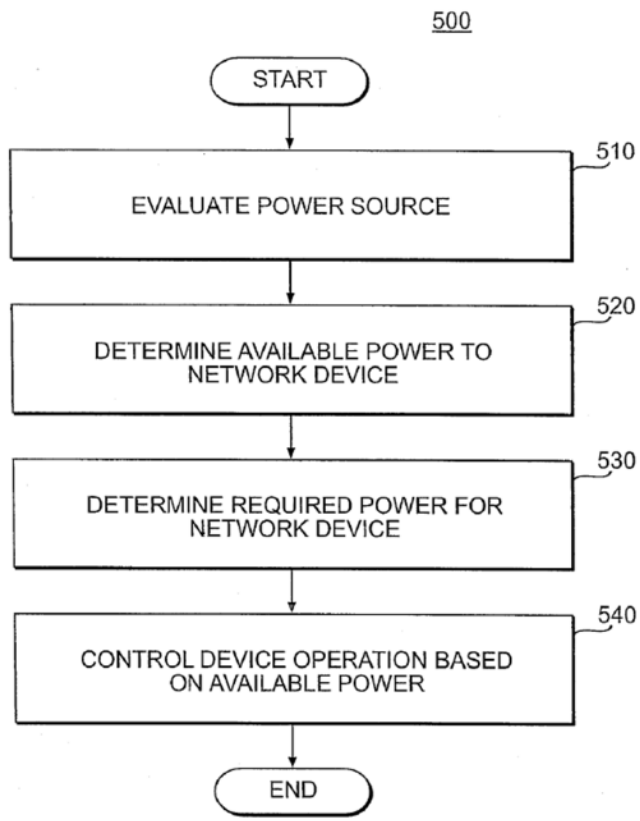 *FIG. 5* Penning at Fig. 5.

		To the extent that Plaintiff contends that Penning does not explicitly or inherently disclose this element, or render obvious this element, this element is obvious in combination with one or more references and/or with the knowledge of a person of ordinary skill in the art, as set forth in Defendant's Invalidity Contentions.
1(e)	wherein the information extracted by the load detector comprises information regarding whether the connected device is powered on or powered off, and whether or not the connected device needs a supply of power.	Penning discloses and/or renders obvious this limitation. *See, e.g.*: "Process controller 340 may also provide control signals to PCPC 370 which may include instructions for providing the appropriate amount of power to VoIP telephone 215. Initially, PCPC 370 may first sense the power VoIP telephone 215 is requesting by measuring the signature resistance presented at powered port 315 by VoIP telephone 215. This may be done in accordance with PoE standard 802.3af. Once the power signature is requested, which may be class 0, 1, 2, or 3, process controller 340 may instruct the power controller in PCPC 370 to provide powered port 315 with the appropriate amount of power for use by VoIP telephone 215. This power may be provided over powered port 315 using PoE. The PSE controller 370 may collect requested powering information from the device (215) connected to powered port 315 and report that information to Process Controller 340 for various purposes, including reporting back to the closet switch 210 via PoE Controller 360 for power of switch 205." Penning at [0053]. "Initially, process controller 340 may scan each power detector 350 and 355 for an active power signal. Process controller 340 may then make the determination if power is present on power detector 355, which monitors power signals coming from independent power supply 115. If power is present on power detector 355, process controller 340 may source power from independent power supply 115. This can be accomplished by having process controller 340 send a signal to switching circuit 380 to open and prevent current from flowing from uplink port 320. Process controller 340 may then send another signal to PoE controller 360, which can set a signature resistance on uplink port 320 (in accordance with IEEE 802.3af standards) for signaling closet gigabit switch 210 that gigabit switch 205 does not require any power over the data line through uplink port 320. Alterna-tively, or additionally, power detector 350 may signal process controller 340 that power is present on uplink port 320, process controller 340 may send a signal to PoE controller 360 to configure the signature resistance across uplink port 320, so that it will signal closet gigabit switch 210 to allocate and offer power to gigabit switch 205 (S430)." Penning at [0056].

		"Referring to FIG. 5, an exemplary power management process 500 for a network device, such as a VoIP phone 400, that may be initiated by the VoIP phone 400 each time a new peripheral device, adapter, and/or module is connected to the VoIP phone 400 and/or each time the VoIP phone 400 is restarted or initialized. The power management process 500 includes evaluating the potential power sources, e.g., the DC adapter connection 420 and/or the network connection(s) 405, 410, to identify an active power source (step 510). Depending upon the power source, e.g., PoE and/or indepen-dent power supply through the DC adapter connection 420, the total available power for the VoIP phone 400 is calculated by the power controller 435 (step 520). Next, the total required power for the VoIP phone 400 and any peripheral devices, adapters, and/or modules is determined with the power controller 435 (step 530). If the total required power is less than the total available power for the VoIP phone 400, the power management process 500 is terminated. If the total required power is more than the total available power for the VoIP phone 400, the VoIP phone 400 is either automatically limited in one or more operations or features (e.g., USB ports disabled or switched to lower power levels, and/or the user is prompted, such as through the display 490, to remove periph-eral devices or take other measures that may reduce the total required power for the VoIP phone 400) (step 540). The power management process 500 is terminated upon adequately low-ering the total required power of the VoIP phone 400 below the total available power, powering down the VoIP phone 400, and/or raising the total available power above that required by the VoIP phone, e.g., manually adjusting the power signature of the phone 400 with switch 436 to a higher power signature (from class 2 to class 3) and typically resetting the phone 400." Penning at [0067]. "When determining the required power for the VoIP phone 400, the power controller 435 may measure actual current flow or power draw for each auxiliary device, e.g., for each module, adapter, and/or peripheral device connected with the VoIP phone 400, e.g., with one or more power detec-tion sensors 430. Alternatively, or in addition, the power controller 435 may assign default values, such as a maximum power consumption value for a device, to one or more auxil-iary devices. For example, if the VoIP phone 400 is connected with an adapter or peripheral device, such as a USB device through USB port 415, the power controller 435 may auto-matically assign the maximum power consumption value for a USB device through the USB port 415 to a maximum value, e.g., 2.5 Watts. The determination of the total available power (step 520) and the determination of the total required power (step 530) may occur simultaneously, subsequently, and/or in reverse order from that shown in FIG. 5." Penning at [0070].

		"If an auxiliary device is hot plugged into the VoIP phone, or added prior to a rebooting process for the VoIP phone, the auxiliary device is typically set to a low power mode drawing as little power as possible. However, if an adapter or module, such as a GigE adapter, does not require or support multiple power modes, the adapter or module may be preset to register at a high-power mode (or single power mode). For example, the individual auxiliary devices may have various power modes defined in the R/FS for the particular device. In addition, the various auxiliary devices may inform the VoIP phone of the maximum power requirements for the auxiliary device when the VoIP phone boots up and/or each time an auxiliary device is hot-plugged into the phone." Penning at [0075]. "The power management process (600) is to be performed both when the phone is booting up as well as when-ever a new auxiliary device is detected while the phone is in normal operation. Accordingly, the phone may be configured to perform an inquiry periodically, such as every 3-5 seconds, to determine if additional devices have been added or removed from the phone. For example, if a new device is detected while the phone is in the power management mode and waiting for a user response, the power management pro-cess (600) may be started over again from the beginning (step 605) to factor in the power demands of the new device. Accordingly, the amount of time required to recognize changes in the number or type of auxiliary devices being connected to the phone will be relatively short to permit the rapid recognition of new devices being added and/or the removal of devices, such as in response to a request from the phone to reduce power consumption." Penning at [0076]. "Referring to FIG. 6, power management process (600) begins (step 605) upon phone initialization, e.g., such as during a system reboot or powering up of the phone or upon the detection of a newly added device while the phone is on (hot plug of auxiliary device). The power management process (600) may be performed by any combination of hardware circuitry and/or software resident within the network device. For example, the power controller 435 of phone 400 may determine whether the power management process is being initiated based upon the hot plugging of a new auxiliary device or upon phone initialization (step 610). In step 615, if the phone is being initialized, the available power is set to a power setting parameter characterizing the actual power source. For example, based on whether auxiliary power is used, e.g., through a DC adapter and connection 420, or power is provided over the Ethernet (PoE) (an IEEE switch, such as switch 436, is set to power signature 3 or 2, or "H" or "L," respectively), the parameter AvailPwr is set to 19.0 Watts (auxiliary power), 12.95 (class 3) or 6.49 (class 2), respec-tively. In step 620, the total required power for the

		phone and all auxiliary devices is calculated assuming full power values for each device. The number of devices being registered may be determined by a timer, such that after a predetermined period, e.g., 5 seconds, the power controller 435 will assume that all devices have completed the initial registration process and the total expected load can be calculated accurately. In step 625, if a new device is detected as being added to the phone, the incremental impact on total required power by the hot-plugged auxiliary device is added to the total required power. If more than one device is added at one time (as detected during the predetermined time interval) the impact of all such devices will be considered to determine the required power parameter, ReqPwr." Penning at [0077]. 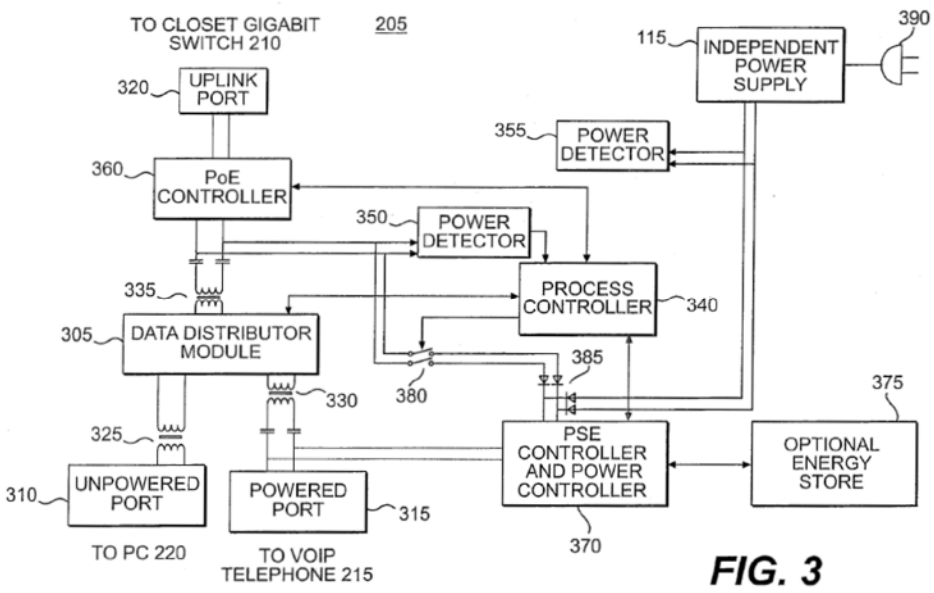 FIG. 3 Penning at Fig. 3.

		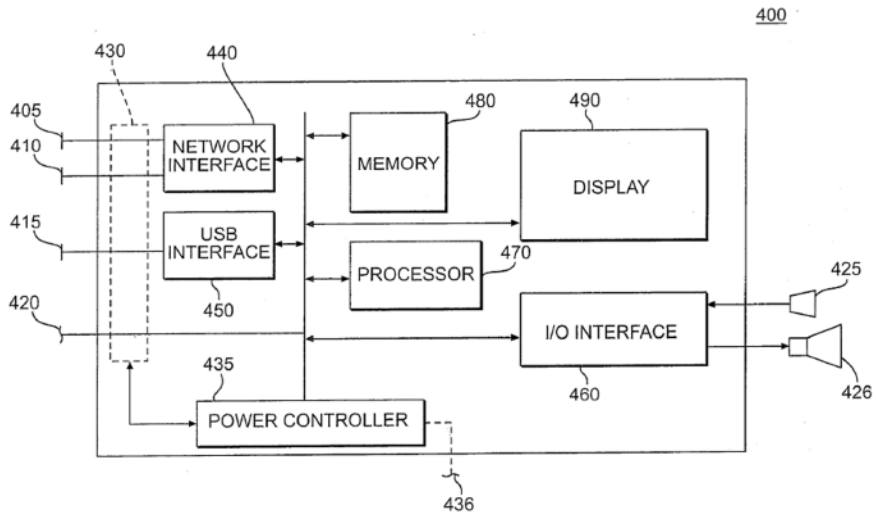 *FIG. 4* Penning at Fig. 4.

		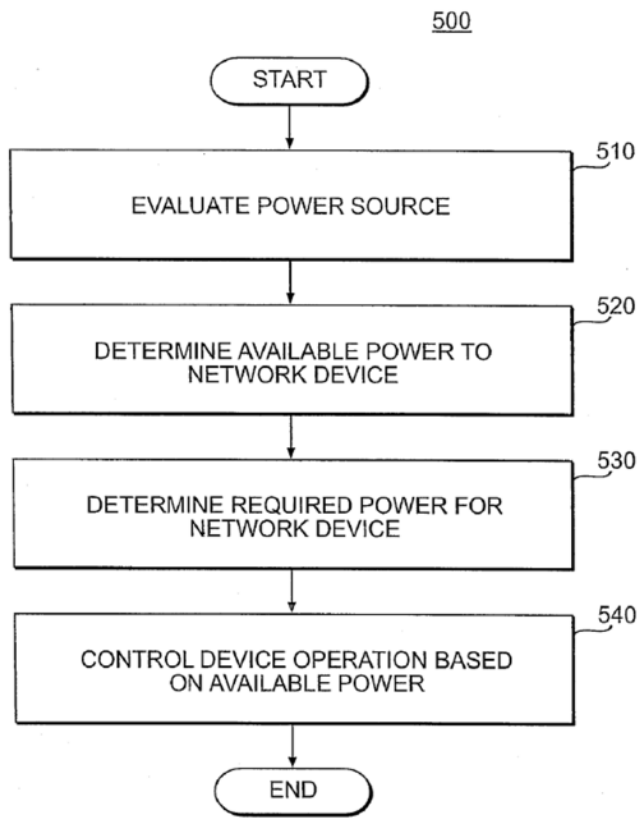 *FIG. 5* Penning at Fig. 5.

Exhibit E-3

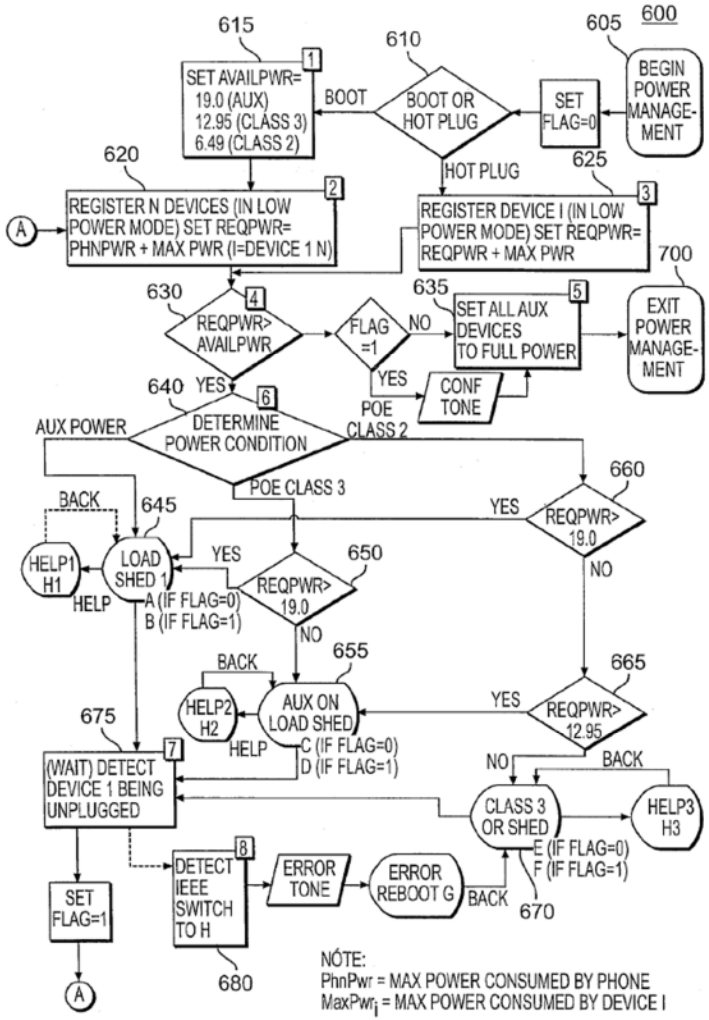

FIG. 6

Penning at Fig. 6.

		To the extent that Plaintiff contends that Penning does not explicitly or inherently disclose this element, or render obvious this element, this element is obvious in combination with one or more references and/or with the knowledge of a person of ordinary skill in the art, as set forth in Defendant's Invalidity Contentions.
Claim 5		
5	The power delivery circuit of claim 1, wherein the load detector is further configured to detect removal of one of the plurality of devices from the network.	Penning discloses and/or renders obvious this limitation. *See, e.g.*: "The power controller 435 determines the presence of current flowing within the powering wire of the USB port 415, e.g., to determine the active power source, and/or mea-sures a total power or current draw for the VoIP phone 400 and any peripheral devices connected through the USB port 415, e.g., to determine the total power consumption for the VoIP phone 400. Alternatively, or in addition, the power controller 430 may determine the collective power draw of the VoIP phone 400, including any adapters, modules, and/or periph-eral devices, each time the VoIP phone 400 is reset and/or each time an adapter, module, and/or peripheral device is connected or disconnected from the VoIP phone 400. The power controller 430 and/or processor 470 may monitor the USB port 415 and enable or disable the USB port 415 based upon actual real time power usage measurements at the USB port 415. Accordingly, the remainder of the network is protected from over current situations, such as when operating the VoIP phone 400 off of PoE." Penning at [0066]. "In addition, or alternatively, any one of the steps shown in FIG. 5 may be performed in alternative orders depending on whether additional devices are being plugged or unplugged into the network device, whether the network device is being restarted or initialized, and/or based on vari-ous user inputs." Penning at [0073]. "The power management process 600 covers the reg-istration of newly added auxiliary devices (such as adapters, modules, or peripheral devices such as USB devices), the removal of auxiliary devices, and/or the associated user involvement with the power management process. In the fol-lowing description of FIG. 6, a VoIP phone, such as that shown in FIG. 4, is used as an example of an network device supporting connection(s) to one or more auxiliary devices. However, various other network devices may be configured to implement one or more of the power management processes of this description." Penning at [0074].

		"In step 640, the appropriate power management screen to display for the user is based upon the available power source currently being used by the phone. For example, referring to FIGS. 7A-7K, numerous exemplary screenshots are shown that demonstrate various user prompts and power management options that may be displayed on the network device, e.g., such as on display 490 of VoIP phone 400. If the power requirement exceeds the maximum of the auxiliary power supply (19 Watts), an initial screen (FIG. 7 A) may be shown, e.g., to prompt the user to remove a device. FIG. 7B may be shown if a device was removed by the user, e.g., a USB device is unplugged, but another device must be unplugged to meet the power requirements. If the power requirement exceeds the maximum of IEEE power class 3 (12.95 Watts), but less than the maximum of the aux power supply, an initial screen (FIG. 7C) may be shown prompting a change in power supply or device removal. If an auxiliary device has already been removed by the user in response to the initial screen (FIG. 7C), the user may be prompted to remove another device to meet the power requirements if still not met (FIG. 7D)." Penning at [0080]. "In step 675, the power controller 435 determines, e.g., after providing a predetermined time period for the user to take corrective action after being prompted visually and/or with an audio tone or signal, if one or more devices has been removed by the user. If the device has been removed, the routine may return to the beginning of the power management process (step 605) or loop back to an intermediate process step (e.g., step 620) to determine if the remedial measure (removal of the auxiliary device) addressed the power supply issue for the device. Alternatively, while the power manage-ment screen is displayed prompting the user to take some action, all auxiliary devices may be powered to a low power mode and/or disabled after some predetermined period of time. If the user action includes removing the auxiliary device from the phone, the power controller 435 of the phone will detect the user action and then repeat the power management process 600.Alternatively, or in addition, the user may unplug the phone to switch power sources, e.g., to either add aux power or to set the IEEE switch 436 to "H" (PoE class 3). When the phone reboots after being repowered, the Power Management process will restart from the beginning of the process (step 605). Further, if the power controller435 detects the power source being changed, e.g., the IEEE switch 436 being changed from "L" to "H", an error tone may be played along with a screen prompting the user to reboot the phone and notify the system that the PoE signature for the phone has changed." Penning at [0084].

		"The power management process 600 may include one or more additional features. For example, the power controller 435 may be configured to scan the auxiliary devices periodically, e.g., every 3 seconds, to recognize each time an auxiliary device has been disconnected from the phone." Penning at [0085]. To the extent that Plaintiff contends that Penning does not explicitly or inherently disclose this element, or render obvious this element, this element is obvious in combination with one or more references and/or with the knowledge of a person of ordinary skill in the art, as set forth in Defendant's Invalidity Contentions.
Claim 7		
7[p]	A method of delivering power to one of a plurality of devices connected in a daisy chain, the method comprising:	To the extent the preamble is limiting, Penning discloses this element and/or renders it obvious either alone or in combination with other references and/or the knowledge of one of ordinary skill in the art. *See, e.g.*: "FIG. 1 shows an exemplary configuration 100 including a data distribution device having a plurality of power supplies. Configuration 100 may include a data distri-bution device 105, an independent power supply 115, a remote data distribution device 110, one or more network devices 125-1-125-N, and one or more externally powered network devices 120-1-120-N." Penning at [0029]. "Data distribution device 105 may exchange data with remote data distribution device 110 over a connection through a wall plate 114. Wall plate 114 may be physically attached to wall 112, and may typically be in local proximity to data distribution device 105 and remote proximity from independent power supply 115. Additionally, operational power for the data distribution device 105 may be provided by remote data distribution device 110 over the same connection used for data through wall plate 114....Data distribution device 105 may also exchange data with one or more externally powered network devices 120-1-120-N and with one or more network device 125-1-125-N. Typically, data distribution device 105 may not provide power to externally powered network devices 120-1-120-N. Data may be exchanged with other devices and/or networks through remote data distribution device 110, and/or may be exchanged with other devices directly connected to data

		dis-tribution device 105. Additionally, data distribution device 105 may provide power to one or more network devices 125-1-125-N over the same connection used to exchange data, e.g., through an Ethernet connection and PoE. The power for the network device(s) 125-1-125-N originates from the power source that data distribution device 105 has selected. Moreover, data distribution device 105 may sense the amount of power required by one or more network devices 125-1-125-N, and provide power accordingly." Penning at [0030]. Referring to FIG. 5, an exemplary power management process 500 for a network device, such as a VoIP phone 400, that may be initiated by the VoIP phone 400 each time a new peripheral device, adapter, and/or module is connected to the VoIP phone 400 and/or each time the VoIP phone 400 is restarted or initialized. The power management process 500 includes evaluating the potential power sources, e.g., the DC adapter connection 420 and/or the network connection(s) 405, 410, to identify an active power source (step 510). Depending upon the power source, e.g., PoE and/or indepen-dent power supply through the DC adapter connection 420, the total available power for the VoIP phone 400 is calculated by the power controller 435 (step 520). Next, the total required power for the VoIP phone 400 and any peripheral devices, adapters, and/or modules is determined with the power controller 435 (step 530). If the total required power is less than the total available power for the VoIP phone 400, the power management process 500 is terminated. If the total required power is more than the total available power for the VoIP phone 400, the VoIP phone 400 is either automatically limited in one or more operations or features (e.g., USB ports disabled or switched to lower power levels, and/or the user is prompted, such as through the display 490, to remove periph-eral devices or take other measures that may reduce the total required power for the VoIP phone 400) (step 540). The power management process 500 is terminated upon adequately low-ering the total required power of the VoIP phone 400 below the total available power, powering down the VoIP phone 400, and/or raising the total available power above that required by the VoIP phone, e.g., manually adjusting the power signature of the phone 400 with switch 436 to a higher power signature (from class 2 to class 3) and typically resetting the phone 400." Penning at [0067]. "In addition, the VoIP phone 400 may include a USB port 415 and USB interface 450 for connecting a variety of peripheral devices, such as, for example, memory devices, cellular telephones, personal digital assistants (PDAs), and/or night lights. Although many peripheral devices connecting through the USB port 415 may be provided with independent or integrated power supplies, some peripheral devices may draw power through the VoIP phone 400, such as for charging the internal power

		supply of a PDA connected through the USB port 415. Peripheral devices drawing power through the USB port 415 may draw varying amounts of power, e.g., typically 2.5 W or less, through the VoIP phone 400 and the power source being used by the VoIP phone 400, e.g., through an AC/DC wall adapter if connected through connection 420 or through the Ethernet (PoE).” Penning at [0061]. “The network apparatus may include a USB port, wherein the process controller is configured to control the supply of power to the auxiliary device through the USB port. The network apparatus may include an auxiliary device con-nection, wherein the auxiliary device is a network module, a network adapter, or a peripheral device, operatively con-nected and capable of receiving power through the auxiliary device connection. The power detection device may be con-figured to sense a power signal between the network appara-tus and the auxiliary device operatively connected through the auxiliary device connection. The power detection device may be configured to determine a power requirement for the auxiliary device based on the power signal between the net-work apparatus and the auxiliary device, and the process controller may be configured to determine the total required power for the network apparatus based on the power require-ment for the auxiliary device.” Penning at [0014]. “If the VoIP phone 400 is receiving power through an independent power supply, such as through an AC/DC adapter connected to the connection 420, the power controller 430 may process software enabling the VoIP phone to also power peripheral devices through the USB port 415. Alterna-tively, or in addition, if the VoIP phone 400 is receiving power through PoE, the VoIP phone 400 may prompt the user to disconnect the USB port 415, connect an independent power supply through connection 420, and/or to adjust the power signature of the VoIP phone manually, e.g., move switch 436 positioned on the housing of the VoIP phone 400 to a higher power classification supporting peripheral devices, e.g., from a PoE class 2 signature to a PoE class 3 signature. Alterna-tively, or in addition, the VoIP phone 400 may automatically disable and/or adjust the power signature of the VoIP phone 400, e.g., through software residing within the phone and managed by the power controller 435.” Penning at [0064]. “In addition, or alternatively, the power detector 430 may include a sensor or sensors determining if a peripheral device connected through the USB port 415 is drawing power through the VoIP phone and USB interface 450. The power detector 430 may include sensors for each power source

		and/or for each USB port 415 provided on the VoIP phone 400. For example, if the VoIP phone 400 is provided with an Ethernet port 405, an AC/DC adapter connection 420 (or AC power connection with internal AC/DC transformer within the VoIP phone 400), and a pair ofUSB ports 415, the power detector 430 may include four independent sensors config-ured to detect current levels or power through the respective connections. Alternatively, the power detector 430 may include an integrated power detection module (as shown in FIG. 4) detecting current and/or power for each power source and device drawing power through the VoIP phone 400. Accordingly, one or more of the sensors may be configured to only detect current flow and/or actually measure current pass-ing through the sensor, e.g., such as a donut-shaped coil surrounding the conducting wire and configured to detect and measure current passing through the conducting wire in a manner similar to a FLUKE™ clamp meter." Penning at [0065]. "The power controller 435 determines the presence of current flowing within the powering wire of the USB port 415, e.g., to determine the active power source, and/or mea-sures a total power or current draw for the VoIP phone 400 and any peripheral devices connected through the USB port 415, e.g., to determine the total power consumption for the VoIP phone 400. Alternatively, or in addition, the power controller 430 may determine the collective power draw of the VoIP phone 400, including any adapters, modules, and/or peripheral devices, each time the VoIP phone 400 is reset and/or each time an adapter, module, and/or peripheral device is connected or disconnected from the VoIP phone 400. The power controller 430 and/or processor 470 may monitor the USB port 415 and enable or disable the USB port 415 based upon actual real time power usage measurements at the USB port 415. Accordingly, the remainder of the network is protected from over current situations, such as when operating the VoIP phone 400 off of PoE." Penning at [0066].

		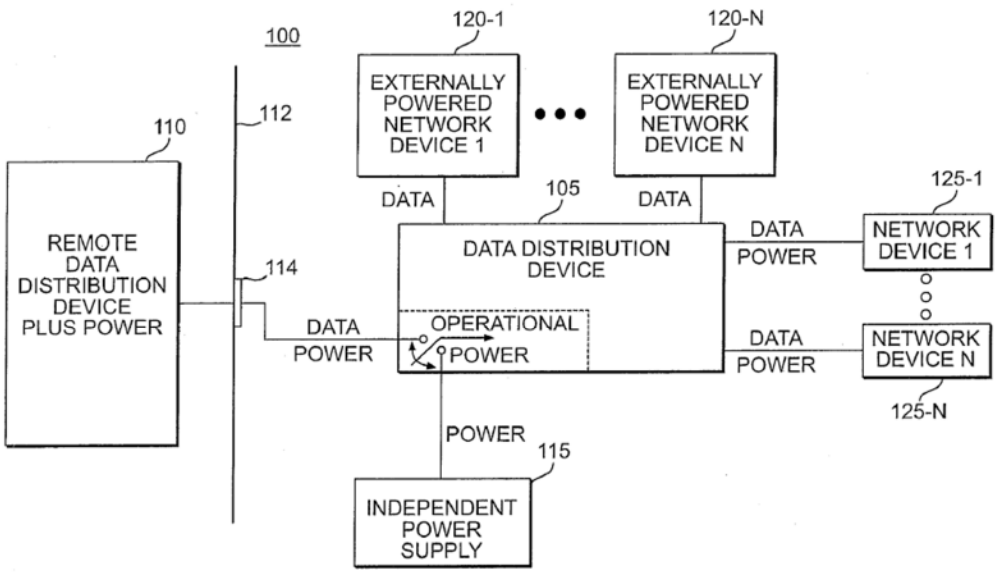 *FIG. 1* Penning at Fig. 1. To the extent that Plaintiff contends that Penning does not explicitly or inherently disclose this element, or render obvious this element, this element is obvious in combination with one or more references and/or with the knowledge of a person of ordinary skill in the art, as set forth in Defendant's Invalidity Contentions.
7(a)	detecting a load in a first device of the plurality of devices including detecting a load current flowing through the load;	Penning discloses and/or renders obvious this limitation. *See* exemplary disclosures and corresponding discussion for claim element 1(d).

7(b)	extracting information from the first device based on the detected load current; and	Penning discloses and/or renders obvious this limitation. *See* exemplary disclosures and corresponding discussion for claim element 1(d).
7(c)	relaying power to the first device based on the extracted information;	Penning discloses and/or renders obvious this limitation. *See* exemplary disclosures and corresponding discussion for claim element 1(b)-1(e).
7(d)	wherein the information extracted comprises information regarding whether the first device is powered on or powered off, and whether or not the first device needs a supply of power.	Penning discloses and/or renders obvious this limitation. *See* exemplary disclosures and corresponding discussion for claim element 1(e).

Exhibit E-17

Invalidity of the ’712 Patent in View of IEEE 802.3af-2003 Standard for Information Technology (IEEE 802.3af)

This chart provides examples of where the prior art reference discloses, either expressly or inherently, the claim elements of asserted U.S. Patent No. 8,680,712 (“the ’712 patent”). The citations herein are exemplary and are not exhaustive; Defendant has cited the most relevant portions of the identified prior art. For each citation, Defendant hereby incorporates by reference the entire cited prior art reference, and reserves the right to rely on uncited portions of each identified prior art reference. To provide context or identify the state of the art at the time of the alleged invention, Defendant reserves the right to rely on: (1) uncited portions of the identified prior art; (2) other prior art not identified herein; (3) references that show the state of the art (irrespective of whether such references themselves qualify as prior art); (4) factual testimony from the inventors or authors of the prior art references, or purveyors of prior art devices; and (5) expert testimony.

Where Defendant cites a figure, the citation includes any text associated with the figure. Where Defendant cites passages relating to a figure, the citation includes the associated figure any other text associated with that figure. Where Defendant cites particular prior art as disclosing a claim element, that citation equally applies to all identical or similar claim elements in this chart. Defendant reserves the right to further assert that a claim element is inherent, the element would have been obvious to a person of ordinary skill in the art, or the element is disclosed in other prior art that may be combined with the cited prior art. To establish the inherency of certain features of the prior art to invalidate the asserted claims, Defendant may rely on cited or uncited portions of the prior art, other documents, factual testimony, and expert testimony.

This invalidity chart is based on information presently available to Defendant, and the information herein is provided as a non-limiting example.

IEEE 802.3af was published on June 18, 2003, and is therefore prior art under at least 35 U.S.C. § 102(b).

Exhibit E-17

Claim Limitation		IEEE 802.3af
Claim 1		
1[p]	A power delivery circuit configured to deliver power to one or more of a plurality of devices connected in a network, the power delivery circuit comprising:	To the extent the preamble is limiting, IEEE 802.3af discloses this element and/or renders it obvious either alone or in combination with other references and/or the knowledge of one of ordinary skill in the art. *See, e.g.*: "This clause defines the functional and electrical characteristics of two optional power (non-data) entities, a Powered Device (PD) and Power Sourcing Equipment (PSE), for use with the physical layers defined in Clauses 14, 25, and 40. These entities allow devices to supply/draw power using the same generic cabling as is used for data transmission. DTE powering is intended to provide a 10BASE-T, 100BASE-TX, or 1000BASE-T device with a single interface to both the data it requires and the power to process these data. This clause specifies the following: a) A power source to add power to the 100Ω balanced cabling system, b) The characteristics of a powered device's load on the power source and the structured cabling, c) A protocol allowing the detection of a device that requires power, d) Optionally, a method to classify devices based on their power needs, and e) A method for scaling supplied power back to the detect level when power is no longer requested or required. The importance of item c) above should not be overlooked. Given the large number of legacy devices (both IEEE 802.3 and other types of devices) that could be connected to a 100Ω balanced cabling system, and the possible consequences of powering such devices, the protocol to distinguish compatible devices and noncompatible devices is important to prevent damage to non-compatible devices. The detection and powering algorithms are likely to be compromised by cabling that is multi-point as opposed to point-to-point, resulting in unpredictable performance and possibly damaged equipment. This clause differentiates between the two ends of the powered portion of the link, defining the PSE and the PD as separate but related devices." IEEE 802.3AF at 27. "PSE, as the name implies, is the equipment that provides the power to a single link section. The PSE's main functions are to search the link section for a PD, optionally classify the PD, supply

		power to the link section (only if a PD is detected), monitor the power on the link section, and scale power back to the detect level when power is no longer requested or required. An unplugged link section is one instance when power is no longer required." IEEE 802.3AF at 29. "In an operational mode, the PSE shall not apply operating power to the PI until the PSE has successfully detected a PD requesting power. The PSE is not required to continuously probe to detect a PD signature. The period of time when a PSE is not attempting to detect a PD signature is implementation dependent. Also, a PSE may successfully detect a PD, but may then opt not to power the detected PD. PSE operation is independent of data link status. The PSE shall turn on power only on the same pairs as those used for detection." IEEE 802.3AF at 37. "PD is a device that is either drawing power or requesting power by participating in the PD detection algorithm. A device that is capable of becoming a powered device may or may not have the ability to draw power from an alternate power source and, if doing so, may or may not require power from the PI. PD capable devices that are neither drawing nor requesting power are also covered in this clause. A PD is specified at the point of the physical connection to the cabling. Characteristics such as the losses due to voltage correction circuits, power supply inefficiencies, separation of internal circuits from external ground or other characteristics induced by circuits after the PI connector are not specified. Limits defined for the PD are specified at the PI, not at any point internal to the PD, unless specifically stated." IEEE 802.3AF at 49.

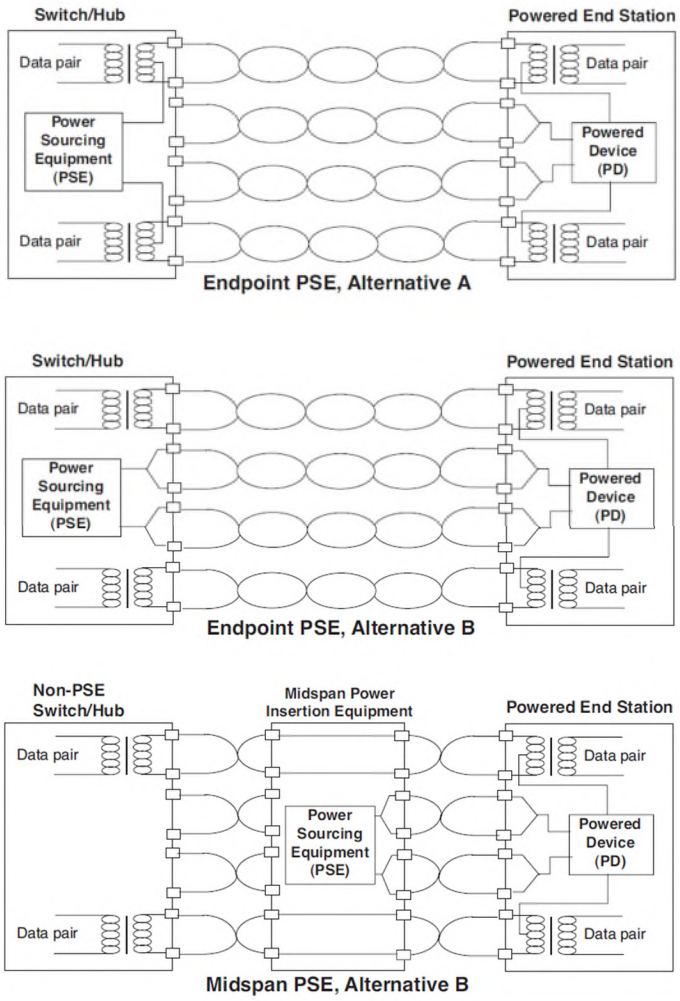

Figure 33–4—PSE location overview

IEEE 802.3AF at Fig. 33-4.

To the extent that Plaintiff contends that IEEE 802.3af does not explicitly or inherently disclose this element, or render obvious this element, this element is obvious in combination with one or

		more references and/or with the knowledge of a person of ordinary skill in the art, as set forth in Defendant's Invalidity Contentions.
1(a)	a voltage source configured to generate a voltage;	IEEE 802.3af discloses and/or renders obvious this limitation. *See, e.g.*: "This clause defines the functional and electrical characteristics of two optional power (non-data) entities, a Powered Device (PD) and Power Sourcing Equipment (PSE), for use with the physical layers defined in Clauses 14, 25, and 40. These entities allow devices to supply/draw power using the same generic cabling as is used for data transmission. DTE powering is intended to provide a 10BASE-T, 100BASE-TX, or 1000BASE-T device with a single interface to both the data it requires and the power to process these data. This clause specifies the following: a) A power source to add power to the 100Ω balanced cabling system, b) The characteristics of a powered device's load on the power source and the structured cabling, c) A protocol allowing the detection of a device that requires power, d) Optionally, a method to classify devices based on their power needs, and e) A method for scaling supplied power back to the detect level when power is no longer requested or required. The importance of item c) above should not be overlooked. Given the large number of legacy devices (both IEEE 802.3 and other types of devices) that could be connected to a 100Ω balanced cabling system, and the possible consequences of powering such devices, the protocol to distinguish compatible devices and noncompatible devices is important to prevent damage to non-compatible devices. The detection and powering algorithms are likely to be compromised by cabling that is multi-point as opposed to point-to-point, resulting in unpredictable performance and possibly damaged equipment. This clause differentiates between the two ends of the powered portion of the link, defining the PSE and the PD as separate but related devices." IEEE 802.3AF at 27. "PSE, as the name implies, is the equipment that provides the power to a single link section. The PSE's main functions are to search the link section for a PD, optionally classify the PD, supply power to the link section (only if a PD is detected), monitor the power on the link section, and scale

		power back to the detect level when power is no longer requested or required. An unplugged link section is one instance when power is no longer required." IEEE 802.3AF at 29. "In an operational mode, the PSE shall not apply operating power to the PI until the PSE has successfully detected a PD requesting power. The PSE is not required to continuously probe to detect a PD signature. The period of time when a PSE is not attempting to detect a PD signature is implementation dependent. Also, a PSE may successfully detect a PD, but may then opt not to power the detected PD. PSE operation is independent of data link status. The PSE shall turn on power only on the same pairs as those used for detection." IEEE 802.3AF at 37.

Exhibit E-17

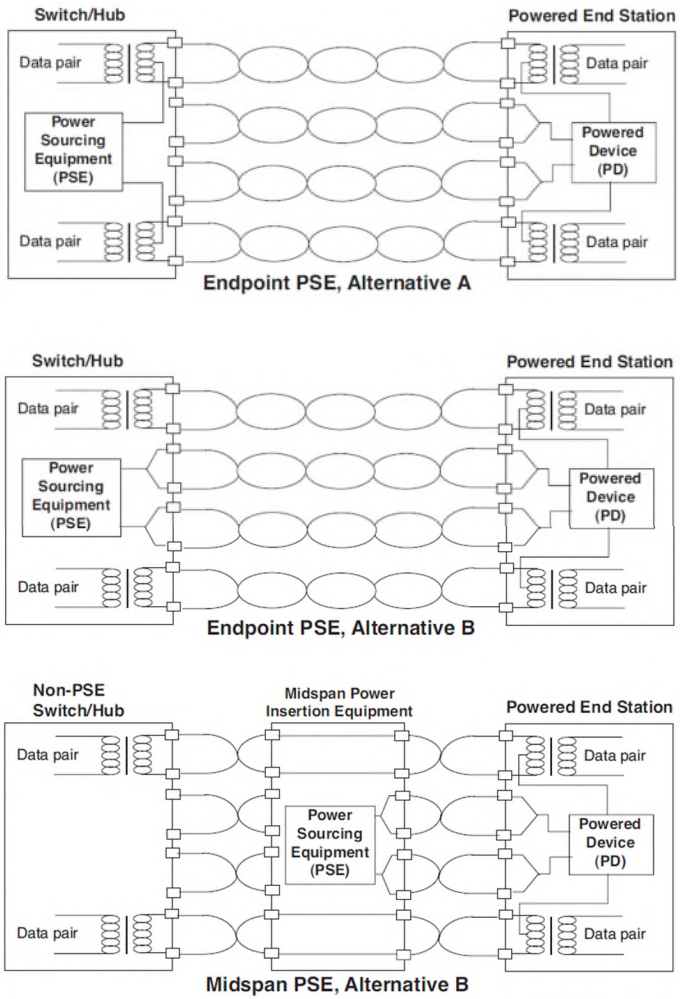

Figure 33–4—PSE location overview

IEEE 802.3AF at Fig. 33-4.

		To the extent that Plaintiff contends that IEEE 802.3af does not explicitly or inherently disclose this element, or render obvious this element, this element is obvious in combination with one or more references and/or with the knowledge of a person of ordinary skill in the art, as set forth in Defendant's Invalidity Contentions.
1(b)	a power relay switch configured to relay, when closed, the voltage generated by the voltage source to one or more of the connected devices;	IEEE 802.3af discloses and/or renders obvious this limitation. *See, e.g.*: "This clause defines the functional and electrical characteristics of two optional power (non-data) entities, a Powered Device (PD) and Power Sourcing Equipment (PSE), for use with the physical layers defined in Clauses 14, 25, and 40. These entities allow devices to supply/draw power using the same generic cabling as is used for data transmission. DTE powering is intended to provide a 10BASE-T, 100BASE-TX, or 1000BASE-T device with a single interface to both the data it requires and the power to process these data. This clause specifies the following: a) A power source to add power to the 100Ω balanced cabling system, b) The characteristics of a powered device's load on the power source and the structured cabling, c) A protocol allowing the detection of a device that requires power, d) Optionally, a method to classify devices based on their power needs, and e) A method for scaling supplied power back to the detect level when power is no longer requested or required. The importance of item c) above should not be overlooked. Given the large number of legacy devices (both IEEE 802.3 and other types of devices) that could be connected to a 100Ω balanced cabling system, and the possible consequences of powering such devices, the protocol to distinguish compatible devices and noncompatible devices is important to prevent damage to non-compatible devices. The detection and powering algorithms are likely to be compromised by cabling that is multi-point as opposed to point-to-point, resulting in unpredictable performance and possibly damaged equipment. This clause differentiates between the two ends of the powered portion of the link, defining the PSE and the PD as separate but related devices." IEEE 802.3AF at 27. "PSE, as the name implies, is the equipment that provides the power to a single link section. The PSE's main functions are to search the link section for a PD, optionally classify the PD, supply

		power to the link section (only if a PD is detected), monitor the power on the link section, and scale power back to the detect level when power is no longer requested or required. An unplugged link section is one instance when power is no longer required." IEEE 802.3AF at 29. "In an operational mode, the PSE shall not apply operating power to the PI until the PSE has successfully detected a PD requesting power. The PSE is not required to continuously probe to detect a PD signature. The period of time when a PSE is not attempting to detect a PD signature is implementation dependent. Also, a PSE may successfully detect a PD, but may then opt not to power the detected PD. PSE operation is independent of data link status. The PSE shall turn on power only on the same pairs as those used for detection." IEEE 802.3AF at 37. "pi_powered A variable that controls the circuitry that the PSE uses to power the PD. Values: FALSE: The PSE is not to apply power to the link (default). TRUE: The PSE has detected a PD, optionally classified it, and determined the PD will be powered." IEEE 802.3AF at 33. "A PSE shall not initiate power provision to a link if the PSE is unable to provide the maximum power level requested by the PD based on the PD's class. Where a PSE does not provide the optional classification function specified in 33.2.7, all PDs are treated as Class 0. The PSE may manage the allocation of power based on additional information beyond the classification of the attached PD. Allocating power based on additional information about the attached PD, and the mechanism for obtaining that additional information, is beyond the scope of this standard with the exception that the allocation of power shall not be based solely on the historical data of the power consumption of the attached PD. If the system implements a power allocation algorithm, no additional behavioral requirement is placed on the system as it approaches or reaches its maximum power subscription. Specifically, the

		interaction between one PSE PI and another PSE PI in the same system is beyond the scope of this standard." IEEE 802.3AF at 45. 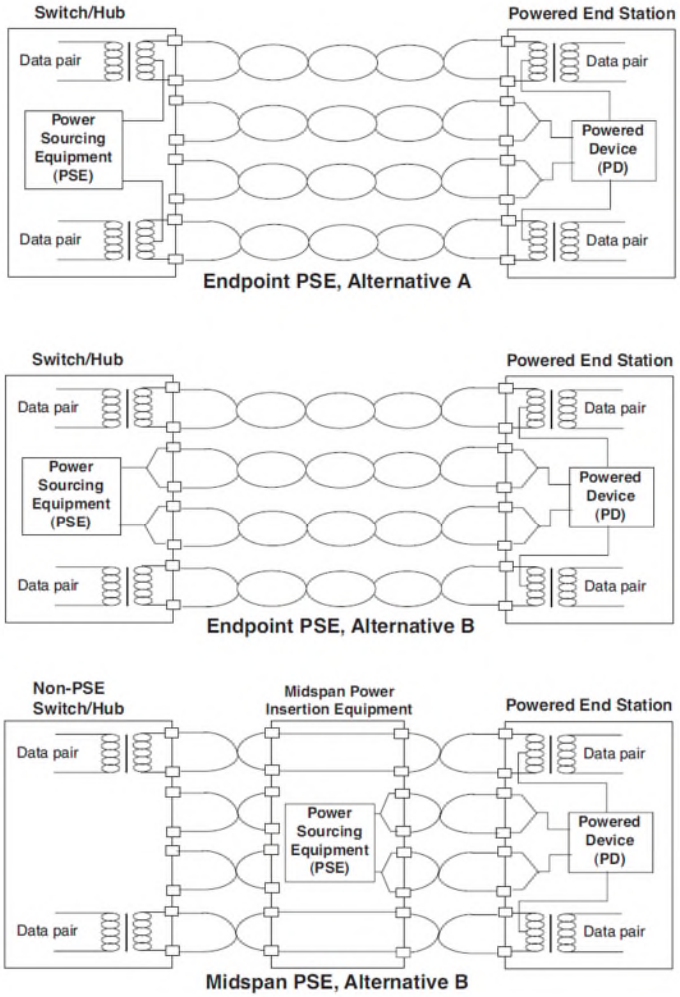 Figure 33–4—PSE location overview IEEE 802.3AF at Fig. 33-4.

		To the extent that Plaintiff contends that IEEE 802.3af does not explicitly or inherently disclose this element, or render obvious this element, this element is obvious in combination with one or more references and/or with the knowledge of a person of ordinary skill in the art, as set forth in Defendant's Invalidity Contentions.
1(c)	a signature resistor connected to the switch and configured to detect a power source from one or more of the connected devices; and	IEEE 802.3af discloses and/or renders obvious this limitation. *See, e.g.*: "This clause defines the functional and electrical characteristics of two optional power (non-data) entities, a Powered Device (PD) and Power Sourcing Equipment (PSE), for use with the physical layers defined in Clauses 14, 25, and 40. These entities allow devices to supply/draw power using the same generic cabling as is used for data transmission. DTE powering is intended to provide a 10BASE-T, 100BASE-TX, or 1000BASE-T device with a single interface to both the data it requires and the power to process these data. This clause specifies the following: a) A power source to add power to the 100Ω balanced cabling system, b) The characteristics of a powered device's load on the power source and the structured cabling, c) A protocol allowing the detection of a device that requires power, d) Optionally, a method to classify devices based on their power needs, and e) A method for scaling supplied power back to the detect level when power is no longer requested or required. The importance of item c) above should not be overlooked. Given the large number of legacy devices (both IEEE 802.3 and other types of devices) that could be connected to a 100Ω balanced cabling system, and the possible consequences of powering such devices, the protocol to distinguish compatible devices and noncompatible devices is important to prevent damage to non-compatible devices. The detection and powering algorithms are likely to be compromised by cabling that is multi-point as opposed to point-to-point, resulting in unpredictable performance and possibly damaged equipment. This clause differentiates between the two ends of the powered portion of the link, defining the PSE and the PD as separate but related devices." IEEE 802.3AF at 27.

		"PSE, as the name implies, is the equipment that provides the power to a single link section. The PSE's main functions are to search the link section for a PD, optionally classify the PD, supply power to the link section (only if a PD is detected), monitor the power on the link section, and scale power back to the detect level when power is no longer requested or required. An unplugged link section is one instance when power is no longer required." IEEE 802.3AF at 29. "In an operational mode, the PSE shall not apply operating power to the PI until the PSE has successfully detected a PD requesting power. The PSE is not required to continuously probe to detect a PD signature. The period of time when a PSE is not attempting to detect a PD signature is implementation dependent. Also, a PSE may successfully detect a PD, but may then opt not to power the detected PD. PSE operation is independent of data link status. The PSE shall turn on power only on the same pairs as those used for detection." IEEE 802.3AF at 37. "The detection voltage Vdetect shall be within the Vvalid voltage range at the PSE PI as specified in Table 33–2 with a valid PD detection signature connected. The PSE shall make at least two measurements with Vdetect values that create at least a ΔVtest difference as specified in Table 33–2 between the two measurements with a valid PD detection signature connected. NOTE—Settling time before voltage or current measurement: the voltage or current measurement should be taken after Vdetect has settled to within 1% of its steady state condition. The PSE shall control the slew rate of the probing detection voltage when switching between detection voltages to be less than Vslew as specified in Table 33–2. The polarity of Vdetect shall match the polarity of VPort as defined in 33.2.1." IEEE 802.3af at 39. "PD is a device that is either drawing power or requesting power by participating in the PD detection algorithm. A device that is capable of becoming a powered device may or may not have the ability to draw power from an alternate power source and, if doing so, may or may not require power from

		the PI. PD capable devices that are neither drawing nor requesting power are also covered in this clause. A PD is specified at the point of the physical connection to the cabling. Characteristics such as the losses due to voltage correction circuits, power supply inefficiencies, separation of internal circuits from external ground or other characteristics induced by circuits after the PI connector are not specified. Limits defined for the PD are specified at the PI, not at any point internal to the PD, unless specifically stated." IEEE 802.3AF at 49. "33.2.3.6 Functions do_detection This function returns multiple variables: The variable signature as defined in 33.2.6 and the variable mr_valid_siganture. signature: This variable indicates the presence or absence of a PD. Values: open_circuit: The PSE has detected an open circuit. This value is optionally returned by a PSE performing detection using Alternative B. valid: The PSE has detected a PD requesting power. invalid: Neither open_circuit, nor valid PD detection signature has been found. mr_valid_signature: This variable indicates that the PSE has detected a valid signature. Values: FALSE: No valid signature detected. TRUE: Valid signature detected. do_classification This function returns multiple variables: pd_requested_power: This variable indicates the power class requested by the PD. Values: 0: Class 1 1: Class 2 2: Class 0, Class 3 or Class 4

		mr_pd_class_detected: The class of the PD associated with the PD detection signature, see Table 33–3, 33.2.7. Class 0 is returned if an invalid classification signature is detected. Values: Class_0 Class_1 Class_2 Class_3 Class_4" IEEE 802.3AF at 34-35. "The PSE shall detect the PD by probing via the PSE PI. The Thevenin equivalent of the detection circuit is shown in Figure 33–8. PSE requirements are stated for a Thevenin circuit only; they may be transformed via circuit theory into other circuit parameters in specific implementations." IEEE 802.3AF at 38. "33.2.6.1 Detection criteria A PSE shall accept as a valid signature a link section with both of the following characteristics between the powering pairs with an offset voltage up to Vos max and an offset current up to Ios max, as specified in Table 33–2: a) Signature resistance Rgood, and b) Parallel signature capacitance Cgood." IEEE 802.3AF at 39. "33.2.6.2 Rejection criteria The PSE shall reject link sections as having an invalid signature, when those link sections exhibit any of the following characteristics between the powering pairs, as specified in Table 33–2: a) Resistance less than or equal to Rbad min, or b) Resistance greater than or equal to Rbad max, or c) Capacitance greater than or equal to Cbad min." IEEE 802.3AF at 40. "33.2.7 PSE classification of PDs The PSE may optionally classify a PD to allow features such as load management to be implemented. If a PSE successfully completes detection of a PD, and the PSE does not classify the PD in Class 1, 2, 3, or 4, then the PSE shall assign the PD to Class 0.

		A successful classification of a PD requires: a) Successful PD detection, and subsequently, b) Successful Class 0–4 classification. A PSE may remove power to a PD that violates the maximum power required for its advertised class. A PSE performs optional classification of a PD by applying voltage and measuring current, as specified in 33.2.7.2. The PSE classification circuit should have adequate stability to prevent oscillation when connected to a PD." IEEE 802.3AF at 40. "33.2.7.2 PSE classification The PSE shall provide VClass between 15.5 and 20.5 volts, limited to 100 mA or less to the PI. Polarity shall be the same as defined for VPort in 33.2.2 and timing specifications shall be as defined by Tpdc in Table 33–5. The PSE shall measure IClass and classify the PD based on the observed current according to Table 33–4. If the measured IClass is equal to or greater than 51mA, the PSE shall classify the PD as Class 0." IEEE 802.3AF at 40. "33.3.3 PD valid and non-valid detection signatures A PD shall present a valid detection signature at the PI between Positive VPort and Negative VPort of PD Mode A and between Positive VPort and Negative VPort of PD Mode B as defined in 33.3.1 while it is in a state where it will accept power via the PI, but is not powered via the PI. A PD shall present a non-valid detection signature at the PI between Positive VPort and Negative VPort of PD Mode A and between Positive VPort and Negative VPort of PD Mode B as defined in 33.3.1 while it is in a state where it will not accept power via the PI. When a PD becomes powered via the PI, it shall present a non-valid detection signature on the set of pairs from which is it not drawing power. The valid and non-valid detection signature regions are separated by guardbands. The guardbands for the V-I slope are the ranges 12KΩ to 23.75KΩ and 26.25KΩ to 45KΩ. A PD that presents a signature in a guard-band is non-compliant." IEEE 802.3AF at 51.

		"3.3.4 PD classifications A PD may be classified by the PSE based on the classification information provided by the PD. The intent of PD classification is to provide information about the maximum power required by the PD during operation. Class 0 is the default for PDs. However, to improve power management at the PSE, the PD may opt to pro-vide a signature for Class 1 to 3. The PD is classified based on power. The classification of the PD is the maximum power that the PD will draw across all input voltages and operational modes. A PD shall return Class 0 to 3 in accordance with the maximum power draw as specified by Table 33–10." IEEE 802.3AF at 53. "33.3.6 PD Maintain Power Signature In order to maintain power, the PD shall provide a valid Maintain Power Signature (MPS) at the PI. The MPS shall be both: a) Current draw equal or above the minimum Input current (IPort min) as specified in Table 33–13 for a minimum duration of 75ms followed by an optional MPS dropout for no longer than 250ms, and b) Input impedance with resistive and capacitive components as defined in Table 33–13. A PD that does not maintain any one of: c) The minimum input current as defined in Table 33–13 for at least 75ms, and d) Input impedance with resistive and capacitive components as defined by Table 33–13 (also, see Figure 33–10 and Figure 33–11), may have its power removed within the limits of TMPDO as specified in Table 33–5. Powered PDs that no longer require power shall remove both components a) and b) of the MPS. To ensure power removal, the impedance of the PI must rise above Zac2 as specified in Table 33–6." IEEE 802.3AF at 56.

Exhibit E-17

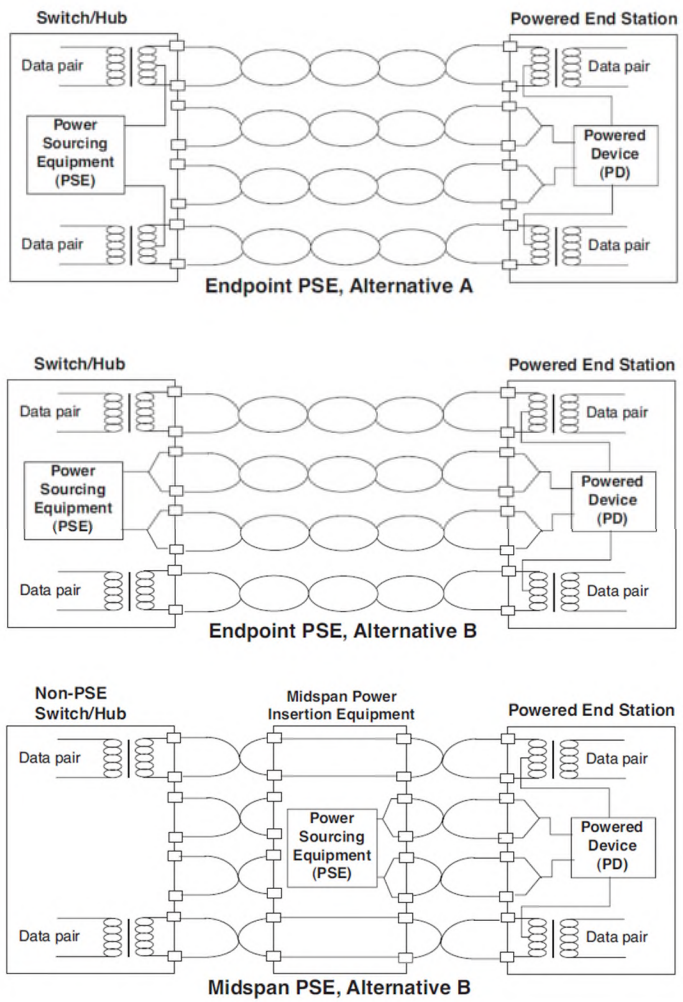

Figure 33–4—PSE location overview

IEEE 802.3AF at Fig. 33-4.

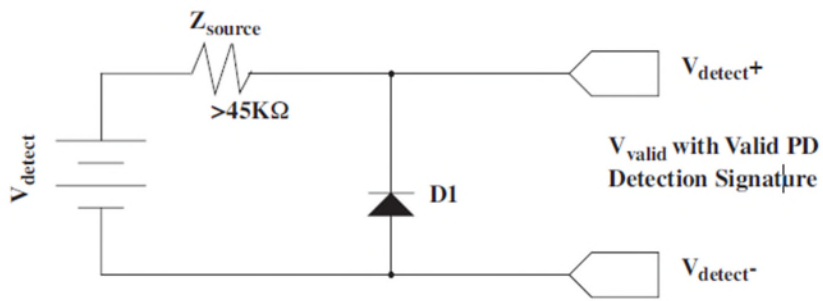

Figure 33–8—PSE detection source

IEEE 802.3AF at Fig. 33-8; *see also id.* at 38 ("The PSE shall detect the PD by probing via the PSE PI. The Thevenin equivalent of the detection circuit is shown in Figure 33–8. PSE requirements are stated for a Thevenin circuit only; they may be transformed via circuit theory into other circuit parameters in specific implementations.").

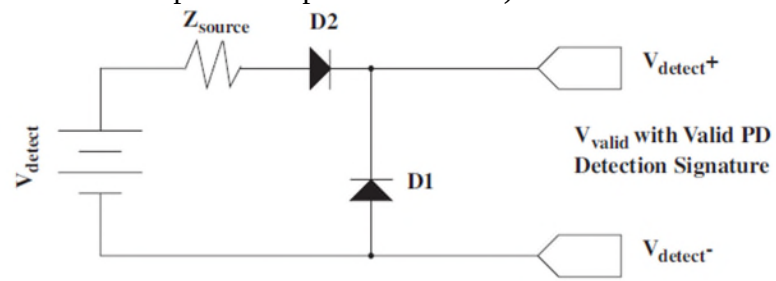

Figure 33–9—Alternative PSE detection source

IEEE 802.3AF at Fig. 33-9.

Table 33–4—PD classification

Measured I_{Class}	Classification
0mA to 5mA	Class 0
> 5mA and < 8mA	May be Class 0 or 1
8mA to 13mA	Class 1
> 13mA and < 16mA	May be Class 0, 1, or 2
16mA to 21mA	Class 2
> 21mA and < 25mA	May be Class 0, 2, or 3
25mA to 31mA	Class 3
> 31mA and < 35mA	May be Class 0, 3, or 4
35mA to 45mA	Class 4
> 45mA and < 51mA	May be Class 0 or 4

IEEE 802.3AF at 41, Table 33-4.

Table 33–8—Valid PD detection signature characteristics, measured at PD input connector

Parameter	Conditions	Minimum	Maximum	Unit
V-I Slope (at any 1V or greater chord within the voltage range conditions)	2.7V to 10.1V	23.75	26.25	KΩ
V offset			1.9	V
I offset			10	µA
Input capacitance	2.7V to 10.1 V	0.05	0.12	µF
Input inductance	2.7V to 10.1 V		100	µH

IEEE 802.3AF at 52, Table 33-8.

Table 33–10—PD power classification

Class	Usage	Range of maximum power used by the PD
0	Default	0.44 to 12.95 Watts
1	Optional	0.44 to 3.84 Watts
2	Optional	3.84 to 6.49 Watts
3	Optional	6.49 to 12.95 Watts
4	Not Allowed	Reserved for Future Use

IEEE 802.3AF at 53, Table 33-10.

Table 33–11—Classification signature, measured at PD input connector

Parameter	Conditions	Minimum	Maximum	Unit
Current for Class 0	14.5V to 20.5V	0	4	mA
Current for Class 1	14.5V to 20.5V	9	12	mA
Current for Class 2	14.5V to 20.5V	17	20	mA
Current for Class 3	14.5V to 20.5V	26	30	mA
Current for Class 4	14.5V to 20.5V	36	44	mA

IEEE 802.3AF at 53, Table 33-11.

<table>
<tr><td></td><td></td><td>

Table 33–13—PD Maintain Power Signature

Item	Parameter	Symbol	Unit	Min	Max	Additional information
1	Input current	I_{port}	mA	10		See 33.3.6.1
2	Input resistance	R_{pd_d}	KΩ		26.25	
3	Input capacitance	C_{pd_d}	µF	0.05		With 0V to 57V DC bias applied

IEEE 802.3AF at 57, Table 33-13.

To the extent that Plaintiff contends that IEEE 802.3af does not explicitly or inherently disclose this element, or render obvious this element, this element is obvious in combination with one or more references and/or with the knowledge of a person of ordinary skill in the art, as set forth in Defendant's Invalidity Contentions.
</td></tr>
<tr><td>1(d)</td><td>a load detector connected to the switch and configured to read a load current flowing therethrough so as to detect a load in one of the connected devices, and to extract information about the connected device based on the load current;</td><td>

IEEE 802.3af discloses and/or renders obvious this limitation. *See, e.g.*:

"A PSE shall not initiate power provision to a link if the PSE is unable to provide the maximum power level requested by the PD based on the PD's class. Where a PSE does not provide the optional classification function specified in 33.2.7, all PDs are treated as Class 0.

The PSE may manage the allocation of power based on additional information beyond the classification of the attached PD. Allocating power based on additional information about the attached PD, and the mechanism for obtaining that additional information, is beyond the scope of this standard with the exception that the allocation of power shall not be based solely on the historical data of the power consumption of the attached PD.

If the system implements a power allocation algorithm, no additional behavioral requirement is placed on the system as it approaches or reaches its maximum power subscription. Specifically, the interaction between one PSE PI and another PSE PI in the same system is beyond the scope of this standard." IEEE 802.3AF at 45.

"This clause defines the functional and electrical characteristics of two optional power (non-data) entities, a Powered Device (PD) and Power Sourcing Equipment (PSE), for use with the physical layers defined in Clauses 14, 25, and 40. These entities allow devices to supply/draw power using
</td></tr>
</table>

		the same generic cabling as is used for data transmission. DTE powering is intended to provide a 10BASE-T, 100BASE-TX, or 1000BASE-T device with a single interface to both the data it requires and the power to process these data. This clause specifies the following: a) A power source to add power to the 100Ω balanced cabling system, b) The characteristics of a powered device's load on the power source and the structured cabling, c) A protocol allowing the detection of a device that requires power, d) Optionally, a method to classify devices based on their power needs, and e) A method for scaling supplied power back to the detect level when power is no longer requested or required. The importance of item c) above should not be overlooked. Given the large number of legacy devices (both IEEE 802.3 and other types of devices) that could be connected to a 100Ω balanced cabling system, and the possible consequences of powering such devices, the protocol to distinguish compatible devices and noncompatible devices is important to prevent damage to non-compatible devices. The detection and powering algorithms are likely to be compromised by cabling that is multi-point as opposed to point-to-point, resulting in unpredictable performance and possibly damaged equipment. This clause differentiates between the two ends of the powered portion of the link, defining the PSE and the PD as separate but related devices." IEEE 802.3AF at 27. "PSE, as the name implies, is the equipment that provides the power to a single link section. The PSE's main functions are to search the link section for a PD, optionally classify the PD, supply power to the link section (only if a PD is detected), monitor the power on the link section, and scale power back to the detect level when power is no longer requested or required. An unplugged link section is one instance when power is no longer required." IEEE 802.3AF at 29. "In an operational mode, the PSE shall not apply operating power to the PI until the PSE has successfully detected a PD requesting power.

		The PSE is not required to continuously probe to detect a PD signature. The period of time when a PSE is not attempting to detect a PD signature is implementation dependent. Also, a PSE may successfully detect a PD, but may then opt not to power the detected PD. PSE operation is independent of data link status. The PSE shall turn on power only on the same pairs as those used for detection." IEEE 802.3AF at 37. "The detection voltage Vdetect shall be within the Vvalid voltage range at the PSE PI as specified in Table 33–2 with a valid PD detection signature connected. The PSE shall make at least two measurements with Vdetect values that create at least a ΔVtest difference as specified in Table 33–2 between the two measurements with a valid PD detection signature connected. NOTE—Settling time before voltage or current measurement: the voltage or current measurement should be taken after Vdetect has settled to within 1% of its steady state condition. The PSE shall control the slew rate of the probing detection voltage when switching between detection voltages to be less than Vslew as specified in Table 33–2. The polarity of Vdetect shall match the polarity of VPort as defined in 33.2.1." IEEE 802.3af at 39. "PD is a device that is either drawing power or requesting power by participating in the PD detection algorithm. A device that is capable of becoming a powered device may or may not have the ability to draw power from an alternate power source and, if doing so, may or may not require power from the PI. PD capable devices that are neither drawing nor requesting power are also covered in this clause. A PD is specified at the point of the physical connection to the cabling. Characteristics such as the losses due to voltage correction circuits, power supply inefficiencies, separation of internal circuits from external ground or other characteristics induced by circuits after the PI connector are not specified. Limits defined for the PD are specified at the PI, not at any point internal to the PD, unless specifically stated." IEEE 802.3AF at 49. "33.2.3.6 Functions

		do_detection This function returns multiple variables: The variable signature as defined in 33.2.6 and the variable mr_valid_siganture. signature: This variable indicates the presence or absence of a PD. Values: open_circuit: The PSE has detected an open circuit. This value is optionally returned by a PSE performing detection using Alternative B. valid: The PSE has detected a PD requesting power. invalid: Neither open_circuit, nor valid PD detection signature has been found. mr_valid_signature: This variable indicates that the PSE has detected a valid signature. Values: FALSE: No valid signature detected. TRUE: Valid signature detected. do_classification This function returns multiple variables: pd_requested_power: This variable indicates the power class requested by the PD. Values: 0: Class 1 1: Class 2 2: Class 0, Class 3 or Class 4 mr_pd_class_detected: The class of the PD associated with the PD detection signature, see Table 33–3, 33.2.7. Class 0 is returned if an invalid classification signature is detected. Values: Class_0 Class_1 Class_2 Class_3 Class_4” IEEE 802.3AF at 34-35.

		"The PSE shall detect the PD by probing via the PSE PI. The Thevenin equivalent of the detection circuit is shown in Figure 33–8. PSE requirements are stated for a Thevenin circuit only; they may be transformed via circuit theory into other circuit parameters in specific implementations." IEEE 802.3AF at 38. "33.2.6.1 Detection criteria A PSE shall accept as a valid signature a link section with both of the following characteristics between the powering pairs with an offset voltage up to Vos max and an offset current up to Ios max, as specified in Table 33–2: a) Signature resistance Rgood, and b) Parallel signature capacitance Cgood." IEEE 802.3AF at 39. "33.2.6.2 Rejection criteria The PSE shall reject link sections as having an invalid signature, when those link sections exhibit any of the following characteristics between the powering pairs, as specified in Table 33–2: a) Resistance less than or equal to Rbad min, or b) Resistance greater than or equal to Rbad max, or c) Capacitance greater than or equal to Cbad min." IEEE 802.3AF at 40. "33.2.7 PSE classification of PDs The PSE may optionally classify a PD to allow features such as load management to be implemented. If a PSE successfully completes detection of a PD, and the PSE does not classify the PD in Class 1, 2, 3, or 4, then the PSE shall assign the PD to Class 0. A successful classification of a PD requires: a) Successful PD detection, and subsequently, b) Successful Class 0–4 classification. A PSE may remove power to a PD that violates the maximum power required for its advertised class. A PSE performs optional classification of a PD by applying voltage and measuring current, as specified in 33.2.7.2. The PSE classification circuit should have adequate stability to prevent oscillation when connected to a PD." IEEE 802.3AF at 40.

		"33.2.7.2 PSE classification The PSE shall provide VClass between 15.5 and 20.5 volts, limited to 100 mA or less to the PI. Polarity shall be the same as defined for VPort in 33.2.2 and timing specifications shall be as defined by Tpdc in Table 33–5. The PSE shall measure IClass and classify the PD based on the observed current according to Table 33–4. If the measured IClass is equal to or greater than 51mA, the PSE shall classify the PD as Class 0." IEEE 802.3AF at 40. "33.3.3 PD valid and non-valid detection signatures A PD shall present a valid detection signature at the PI between Positive VPort and Negative VPort of PD Mode A and between Positive VPort and Negative VPort of PD Mode B as defined in 33.3.1 while it is in a state where it will accept power via the PI, but is not powered via the PI. A PD shall present a non-valid detection signature at the PI between Positive VPort and Negative VPort of PD Mode A and between Positive VPort and Negative VPort of PD Mode B as defined in 33.3.1 while it is in a state where it will not accept power via the PI. When a PD becomes powered via the PI, it shall present a non-valid detection signature on the set of pairs from which is it not drawing power. The valid and non-valid detection signature regions are separated by guardbands. The guardbands for the V-I slope are the ranges 12KΩ to 23.75KΩ and 26.25KΩ to 45KΩ. A PD that presents a signature in a guard-band is non-compliant." IEEE 802.3AF at 51. "3.3.4 PD classifications A PD may be classified by the PSE based on the classification information provided by the PD. The intent of PD classification is to provide information about the maximum power required by the PD during operation. Class 0 is the default for PDs. However, to improve power management at the PSE, the PD may opt to pro-vide a signature for Class 1 to 3. The PD is classified based on power. The classification of the PD is the maximum power that the PD will draw across all input voltages and operational modes.

		A PD shall return Class 0 to 3 in accordance with the maximum power draw as specified by Table 33–10." IEEE 802.3AF at 53. "33.3.6 PD Maintain Power Signature In order to maintain power, the PD shall provide a valid Maintain Power Signature (MPS) at the PI. The MPS shall be both: a) Current draw equal or above the minimum Input current (IPort min) as specified in Table 33–13 for a minimum duration of 75ms followed by an optional MPS dropout for no longer than 250ms, and b) Input impedance with resistive and capacitive components as defined in Table 33–13. A PD that does not maintain any one of: c) The minimum input current as defined in Table 33–13 for at least 75ms, and d) Input impedance with resistive and capacitive components as defined by Table 33–13 (also, see Figure 33–10 and Figure 33–11), may have its power removed within the limits of TMPDO as specified in Table 33–5. Powered PDs that no longer require power shall remove both components a) and b) of the MPS. To ensure power removal, the impedance of the PI must rise above Zac2 as specified in Table 33–6." IEEE 802.3AF at 56.

Exhibit E-17

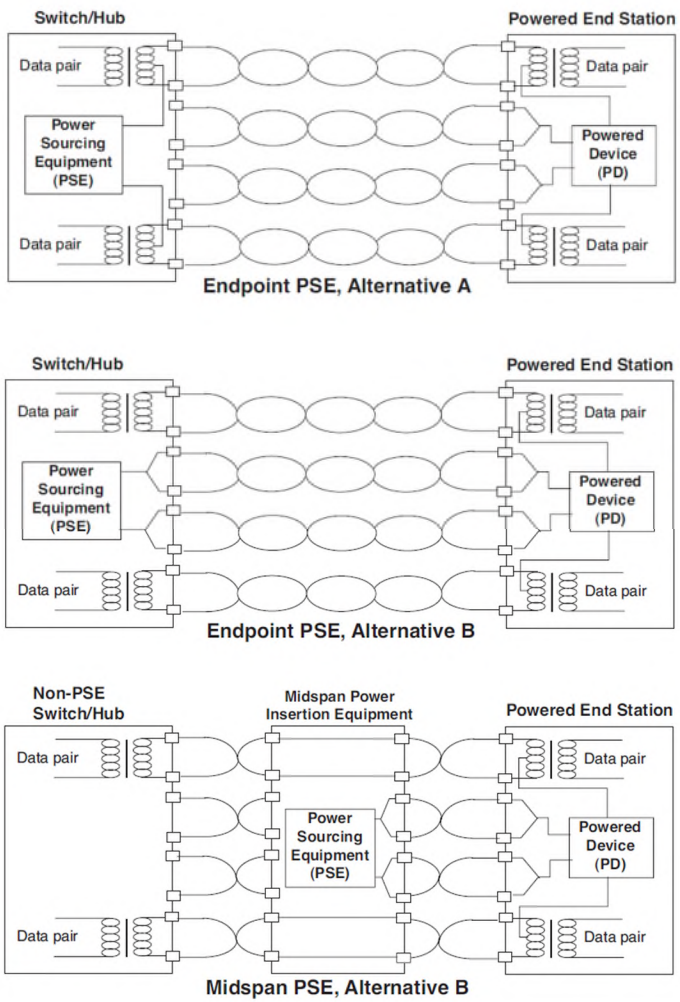

Figure 33–4—PSE location overview

IEEE 802.3AF at Fig. 33-4.

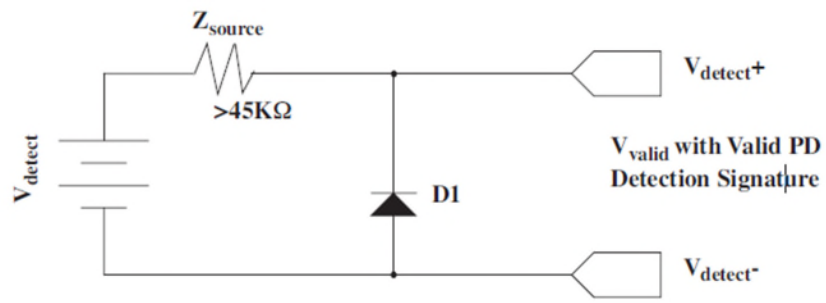

Figure 33–8—PSE detection source

IEEE 802.3AF at Fig. 33-8.

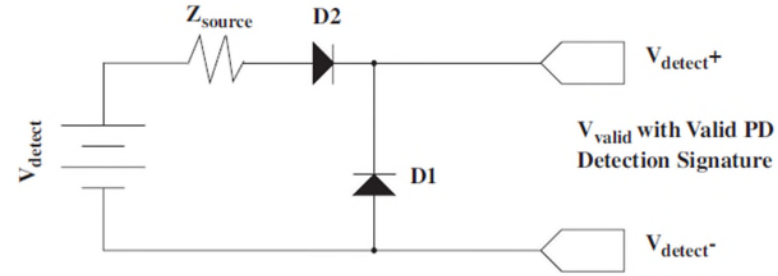

Figure 33–9—Alternative PSE detection source

IEEE 802.3AF at Fig. 33-9.

Table 33–4—PD classification

Measured I_{Class}	Classification
0mA to 5mA	Class 0
> 5mA and < 8mA	May be Class 0 or 1
8mA to 13mA	Class 1
> 13mA and < 16mA	May be Class 0, 1, or 2
16mA to 21mA	Class 2
> 21mA and < 25mA	May be Class 0, 2, or 3
25mA to 31mA	Class 3
> 31mA and < 35mA	May be Class 0, 3, or 4
35mA to 45mA	Class 4
> 45mA and < 51mA	May be Class 0 or 4

IEEE 802.3AF at 41, Table 33-4.

Table 33–8—Valid PD detection signature characteristics, measured at PD input connector

Parameter	Conditions	Minimum	Maximum	Unit
V-I Slope (at any 1V or greater chord within the voltage range conditions)	2.7V to 10.1V	23.75	26.25	KΩ
V offset			1.9	V
I offset			10	µA
Input capacitance	2.7V to 10.1 V	0.05	0.12	µF
Input inductance	2.7V to 10.1 V		100	µH

IEEE 802.3AF at 52, Table 33-8.

Table 33–10—PD power classification

Class	Usage	Range of maximum power used by the PD
0	Default	0.44 to 12.95 Watts
1	Optional	0.44 to 3.84 Watts
2	Optional	3.84 to 6.49 Watts
3	Optional	6.49 to 12.95 Watts
4	Not Allowed	Reserved for Future Use

IEEE 802.3AF at 53, Table 33-10.

Table 33–11—Classification signature, measured at PD input connector

Parameter	Conditions	Minimum	Maximum	Unit
Current for Class 0	14.5V to 20.5V	0	4	mA
Current for Class 1	14.5V to 20.5V	9	12	mA
Current for Class 2	14.5V to 20.5V	17	20	mA
Current for Class 3	14.5V to 20.5V	26	30	mA
Current for Class 4	14.5V to 20.5V	36	44	mA

IEEE 802.3AF at 53, Table 33-11.

<table>
<tr><td></td><td></td><td>

Table 33–13—PD Maintain Power Signature

Item	Parameter	Symbol	Unit	Min	Max	Additional information
1	Input current	I_{port}	mA	10		See 33.3.6.1
2	Input resistance	R_{pd_d}	KΩ		26.25	
3	Input capacitance	C_{pd_d}	µF	0.05		With 0V to 57V DC bias applied

IEEE 802.3AF at 57, Table 33-13.

To the extent that Plaintiff contends that IEEE 802.3af does not explicitly or inherently disclose this element, or render obvious this element, this element is obvious in combination with one or more references and/or with the knowledge of a person of ordinary skill in the art, as set forth in Defendant's Invalidity Contentions.
</td></tr>
<tr><td>1(e)</td><td>wherein the information extracted by the load detector comprises information regarding whether the connected device is powered on or powered off, and whether or not the connected device needs a supply of power.</td><td>

IEEE 802.3af discloses and/or renders obvious this limitation. *See, e.g.*:

"PSE, as the name implies, is the equipment that provides the power to a single link section. The PSE's main functions are to search the link section for a PD, optionally classify the PD, supply power to the link section (only if a PD is detected), monitor the power on the link section, and scale power back to the detect level when power is no longer requested or required. An unplugged link section is one instance when power is no longer required." IEEE 802.3AF at 29.

"The PD may be capable of drawing power from a local power source. When a local power source is provided, the PD may draw some, none, or all of its power from the PI." IEEE 802.3AF at 54.

"A PSE shall not initiate power provision to a link if the PSE is unable to provide the maximum power level requested by the PD based on the PD's class. Where a PSE does not provide the optional classification function specified in 33.2.7, all PDs are treated as Class 0.

The PSE may manage the allocation of power based on additional information beyond the classification of the attached PD. Allocating power based on additional information about the attached PD, and the mechanism for obtaining that additional information, is beyond the scope of this standard with the exception that the allocation of power shall not be based solely on the historical data of the power consumption of the attached PD.
</td></tr>
</table>

		If the system implements a power allocation algorithm, no additional behavioral requirement is placed on the system as it approaches or reaches its maximum power subscription. Specifically, the interaction between one PSE PI and another PSE PI in the same system is beyond the scope of this standard." IEEE 802.3AF at 45. "This clause defines the functional and electrical characteristics of two optional power (non-data) entities, a Powered Device (PD) and Power Sourcing Equipment (PSE), for use with the physical layers defined in Clauses 14, 25, and 40. These entities allow devices to supply/draw power using the same generic cabling as is used for data transmission. DTE powering is intended to provide a 10BASE-T, 100BASE-TX, or 1000BASE-T device with a single interface to both the data it requires and the power to process these data. This clause specifies the following: a) A power source to add power to the 100Ω balanced cabling system, b) The characteristics of a powered device's load on the power source and the structured cabling, c) A protocol allowing the detection of a device that requires power, d) Optionally, a method to classify devices based on their power needs, and e) A method for scaling supplied power back to the detect level when power is no longer requested or required. The importance of item c) above should not be overlooked. Given the large number of legacy devices (both IEEE 802.3 and other types of devices) that could be connected to a 100Ω balanced cabling system, and the possible consequences of powering such devices, the protocol to distinguish compatible devices and noncompatible devices is important to prevent damage to non-compatible devices. The detection and powering algorithms are likely to be compromised by cabling that is multi-point as opposed to point-to-point, resulting in unpredictable performance and possibly damaged equipment. This clause differentiates between the two ends of the powered portion of the link, defining the PSE and the PD as separate but related devices." IEEE 802.3AF at 27. "PSE, as the name implies, is the equipment that provides the power to a single link section. The PSE's main functions are to search the link section for a PD, optionally classify the PD, supply

		power to the link section (only if a PD is detected), monitor the power on the link section, and scale power back to the detect level when power is no longer requested or required. An unplugged link section is one instance when power is no longer required." IEEE 802.3AF at 29. "In an operational mode, the PSE shall not apply operating power to the PI until the PSE has successfully detected a PD requesting power. The PSE is not required to continuously probe to detect a PD signature. The period of time when a PSE is not attempting to detect a PD signature is implementation dependent. Also, a PSE may successfully detect a PD, but may then opt not to power the detected PD. PSE operation is independent of data link status. The PSE shall turn on power only on the same pairs as those used for detection." IEEE 802.3AF at 37. "PD is a device that is either drawing power or requesting power by participating in the PD detection algorithm. A device that is capable of becoming a powered device may or may not have the ability to draw power from an alternate power source and, if doing so, may or may not require power from the PI. PD capable devices that are neither drawing nor requesting power are also covered in this clause. A PD is specified at the point of the physical connection to the cabling. Characteristics such as the losses due to voltage correction circuits, power supply inefficiencies, separation of internal circuits from external ground or other characteristics induced by circuits after the PI connector are not specified. Limits defined for the PD are specified at the PI, not at any point internal to the PD, unless specifically stated." IEEE 802.3AF at 49. "33.2.3.6 Functions do_detection This function returns multiple variables: The variable signature as defined in 33.2.6 and the variable mr_valid_siganture. signature: This variable indicates the presence or absence of a PD. Values:

		open_circuit: The PSE has detected an open circuit. This value is optionally returned by a PSE performing detection using Alternative B. valid: The PSE has detected a PD requesting power. invalid: Neither open_circuit, nor valid PD detection signature has been found. mr_valid_signature: This variable indicates that the PSE has detected a valid signature. Values: FALSE: No valid signature detected. TRUE: Valid signature detected. do_classification This function returns multiple variables: pd_requested_power: This variable indicates the power class requested by the PD. Values: 0: Class 1 1: Class 2 2: Class 0, Class 3 or Class 4 mr_pd_class_detected: The class of the PD associated with the PD detection signature, see Table 33–3, 33.2.7. Class 0 is returned if an invalid classification signature is detected. Values: Class_0 Class_1 Class_2 Class_3 Class_4" IEEE 802.3AF at 34-35. "The PSE shall detect the PD by probing via the PSE PI. The Thevenin equivalent of the detection circuit is shown in Figure 33–8. PSE requirements are stated for a Thevenin circuit only; they may be transformed via circuit theory into other circuit parameters in specific implementations." IEEE 802.3AF at 38. "33.2.6.1 Detection criteria

		A PSE shall accept as a valid signature a link section with both of the following characteristics between the powering pairs with an offset voltage up to Vos max and an offset current up to Ios max, as specified in Table 33–2: a) Signature resistance Rgood, and b) Parallel signature capacitance Cgood." IEEE 802.3AF at 39. "33.2.6.2 Rejection criteria The PSE shall reject link sections as having an invalid signature, when those link sections exhibit any of the following characteristics between the powering pairs, as specified in Table 33–2: a) Resistance less than or equal to Rbad min, or b) Resistance greater than or equal to Rbad max, or c) Capacitance greater than or equal to Cbad min." IEEE 802.3AF at 40. "33.2.7 PSE classification of PDs The PSE may optionally classify a PD to allow features such as load management to be implemented. If a PSE successfully completes detection of a PD, and the PSE does not classify the PD in Class 1, 2, 3, or 4, then the PSE shall assign the PD to Class 0. A successful classification of a PD requires: a) Successful PD detection, and subsequently, b) Successful Class 0–4 classification. A PSE may remove power to a PD that violates the maximum power required for its advertised class. A PSE performs optional classification of a PD by applying voltage and measuring current, as specified in 33.2.7.2. The PSE classification circuit should have adequate stability to prevent oscillation when connected to a PD." IEEE 802.3AF at 40. "33.2.7.2 PSE classification The PSE shall provide VClass between 15.5 and 20.5 volts, limited to 100 mA or less to the PI. Polarity shall be the same as defined for VPort in 33.2.2 and timing specifications shall be as defined by Tpdc in Table 33–5. The PSE shall measure IClass and classify the PD based on the observed

		current according to Table 33–4. If the measured IClass is equal to or greater than 51mA, the PSE shall classify the PD as Class 0." IEEE 802.3AF at 40. "33.3.3 PD valid and non-valid detection signatures A PD shall present a valid detection signature at the PI between Positive VPort and Negative VPort of PD Mode A and between Positive VPort and Negative VPort of PD Mode B as defined in 33.3.1 while it is in a state where it will accept power via the PI, but is not powered via the PI. A PD shall present a non-valid detection signature at the PI between Positive VPort and Negative VPort of PD Mode A and between Positive VPort and Negative VPort of PD Mode B as defined in 33.3.1 while it is in a state where it will not accept power via the PI. When a PD becomes powered via the PI, it shall present a non-valid detection signature on the set of pairs from which is it not drawing power. The valid and non-valid detection signature regions are separated by guardbands. The guardbands for the V-I slope are the ranges 12KΩ to 23.75KΩ and 26.25KΩ to 45KΩ. A PD that presents a signature in a guard-band is non-compliant." IEEE 802.3AF at 51. "3.3.4 PD classifications A PD may be classified by the PSE based on the classification information provided by the PD. The intent of PD classification is to provide information about the maximum power required by the PD during operation. Class 0 is the default for PDs. However, to improve power management at the PSE, the PD may opt to pro-vide a signature for Class 1 to 3. The PD is classified based on power. The classification of the PD is the maximum power that the PD will draw across all input voltages and operational modes. A PD shall return Class 0 to 3 in accordance with the maximum power draw as specified by Table 33–10." IEEE 802.3AF at 53. "33.3.6 PD Maintain Power Signature

		In order to maintain power, the PD shall provide a valid Maintain Power Signature (MPS) at the PI. The MPS shall be both: a) Current draw equal or above the minimum Input current (IPort min) as specified in Table 33–13 for a minimum duration of 75ms followed by an optional MPS dropout for no longer than 250ms, and b) Input impedance with resistive and capacitive components as defined in Table 33–13. A PD that does not maintain any one of: c) The minimum input current as defined in Table 33–13 for at least 75ms, and d) Input impedance with resistive and capacitive components as defined by Table 33–13 (also, see Figure 33–10 and Figure 33–11), may have its power removed within the limits of TMPDO as specified in Table 33–5. Powered PDs that no longer require power shall remove both components a) and b) of the MPS. To ensure power removal, the impedance of the PI must rise above Zac2 as specified in Table 33–6." IEEE 802.3AF at 56.

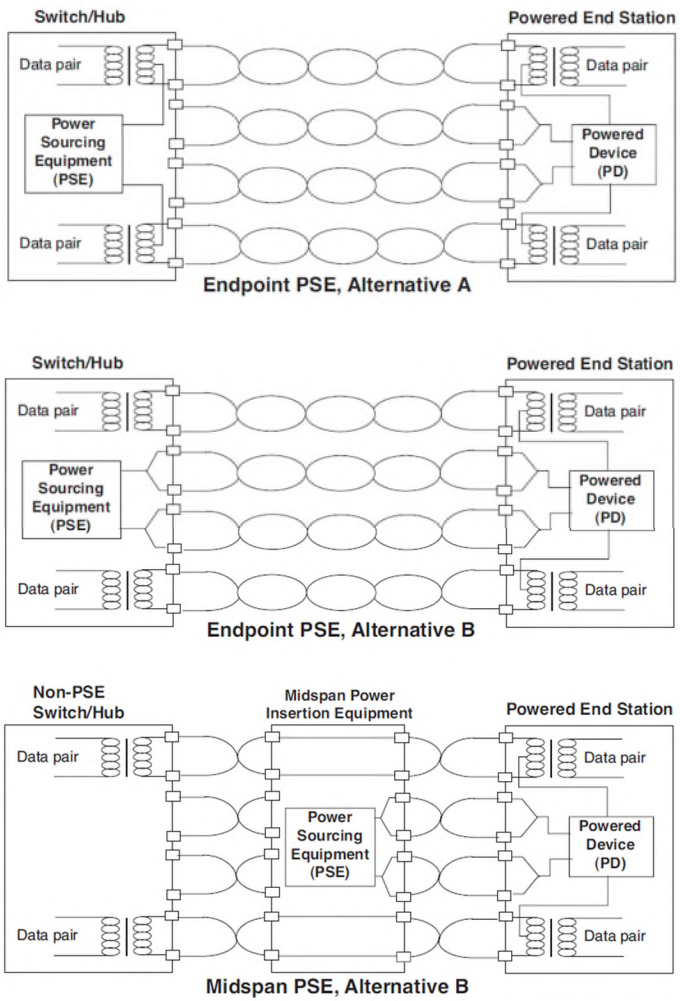

Figure 33–4—PSE location overview

IEEE 802.3AF at Fig. 33-4.

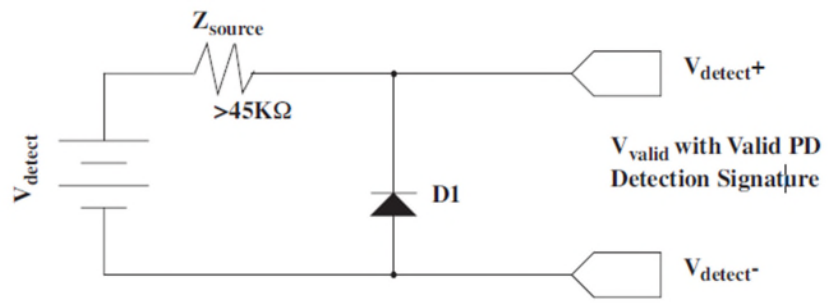

Figure 33–8—PSE detection source

IEEE 802.3AF at Fig. 33-8.

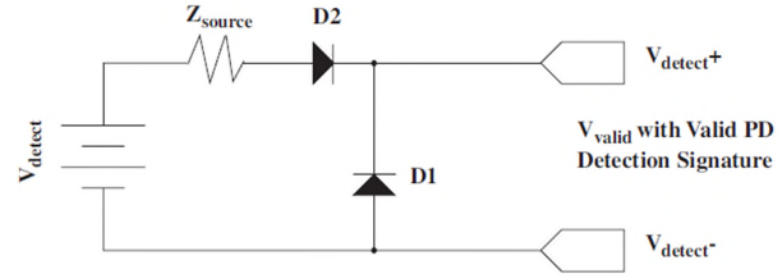

Figure 33–9—Alternative PSE detection source

IEEE 802.3AF at Fig. 33-9.

Table 33–4—PD classification

Measured I_{Class}	Classification
0mA to 5mA	Class 0
> 5mA and < 8mA	May be Class 0 or 1
8mA to 13mA	Class 1
> 13mA and < 16mA	May be Class 0, 1, or 2
16mA to 21mA	Class 2
> 21mA and < 25mA	May be Class 0, 2, or 3
25mA to 31mA	Class 3
> 31mA and < 35mA	May be Class 0, 3, or 4
35mA to 45mA	Class 4
> 45mA and < 51mA	May be Class 0 or 4

IEEE 802.3AF at 41, Table 33-4.

Table 33–8—Valid PD detection signature characteristics, measured at PD input connector

Parameter	Conditions	Minimum	Maximum	Unit
V-I Slope (at any 1V or greater chord within the voltage range conditions)	2.7V to 10.1V	23.75	26.25	KΩ
V offset			1.9	V
I offset			10	µA
Input capacitance	2.7V to 10.1 V	0.05	0.12	µF
Input inductance	2.7V to 10.1 V		100	µH

IEEE 802.3AF at 52, Table 33-8.

Table 33–10—PD power classification

Class	Usage	Range of maximum power used by the PD
0	Default	0.44 to 12.95 Watts
1	Optional	0.44 to 3.84 Watts
2	Optional	3.84 to 6.49 Watts
3	Optional	6.49 to 12.95 Watts
4	Not Allowed	Reserved for Future Use

IEEE 802.3AF at 53, Table 33-10.

Table 33–11—Classification signature, measured at PD input connector

Parameter	Conditions	Minimum	Maximum	Unit
Current for Class 0	14.5V to 20.5V	0	4	mA
Current for Class 1	14.5V to 20.5V	9	12	mA
Current for Class 2	14.5V to 20.5V	17	20	mA
Current for Class 3	14.5V to 20.5V	26	30	mA
Current for Class 4	14.5V to 20.5V	36	44	mA

IEEE 802.3AF at 53, Table 33-11.

Table 33–13—PD Maintain Power Signature

Item	Parameter	Symbol	Unit	Min	Max	Additional information
1	Input current	I_{port}	mA	10		See 33.3.6.1
2	Input resistance	R_{pd_d}	KΩ		26.25	
3	Input capacitance	C_{pd_d}	µF	0.05		With 0V to 57V DC bias applied

IEEE 802.3AF at 57, Table 33-13.

Table 33–6—PSE PI parameters for AC disconnect-detection function *(continued)*

Item	Parameter	Symbol	Unit	Min	Max	Additional information
	AC source output impedance					
2a	Source output current during the operation of the AC disconnect detection function	I_sac	mA		5	During operation of the AC disconnect detection function.
2b	PSE PI impedance during PD detection when measured at the PI of the PSE PI	R_rev	KΩ	45		Specified in 33.2.5 and Figure 33–8. Shown here to clarify the difference in PI impedance during the signature detection function.
	PSE PI voltage during AC disconnect detection					
3a	PI AC voltage when PD is connected	V_{CLOSE}	V_{pp}			See Table 33–5, item 3.
3b	PI voltage when PD is disconnected	V_{Port}	V_p		60	
3c	Disconnect detection time	T_{MPDO}	ms			See Table 33–5, item 7a.
	AC Maintain Power Signature					
4a	Shall not remove power from the PI	$\lvert Z_{ac1} \rvert$	KΩ		27	F_p = 5Hz, Testing voltage >2.5V. See Figure 33–10. Impedance shall have non-negative resistive component and a net capacitive reactive component.
4b	Shall remove power from the PI	$\lvert Z_{ac2} \rvert$	KΩ	1980		See Figure 33–11.

IEEE 802.3AF at 47, Table 33-6.

		To the extent that Plaintiff contends that IEEE 802.3af does not explicitly or inherently disclose this element, or render obvious this element, this element is obvious in combination with one or more references and/or with the knowledge of a person of ordinary skill in the art, as set forth in Defendant's Invalidity Contentions.
Claim 5		
5	The power delivery circuit of claim 1, wherein the load detector is further configured to detect removal of one of the plurality of devices from the network.	IEEE 802.3af discloses and/or renders obvious this limitation. *See, e.g.*: "PSE, as the name implies, is the equipment that provides the power to a single link section. The PSE's main functions are to search the link section for a PD, optionally classify the PD, supply power to the link section (only if a PD is detected), monitor the power on the link section, and scale power back to the detect level when power is no longer requested or required. An unplugged link section is one instance when power is no longer required." IEEE 802.3AF at 29. "33.2.10.1.1 PSE AC MPS component requirements A PSE that monitors the AC MPS component shall meet the "AC Signal parameters" and "PSE PI voltage during AC disconnect detection" parameters in Table 33–6. A PSE shall consider the AC MPS component to be present when it detects an AC impedance at the PI equal to or lower than |Zac1| as defined in Table 33–6. A PSE shall consider the AC MPS component to be absent when it detects an AC impedance at the PI equal to or greater than |Zac2| as defined in Table 33–6. Power shall be removed from the PI when AC MPS has been absent for a time duration greater than TPMDO. A PSE may consider the AC MPS component to be either present or absent when it detects a AC impedance between the values |Zac1| and |Zac2| as defined in Table 33–6. See Figure 33C.15 for timing relationships." IEEE 802.3AF at

Table 33–6—PSE PI parameters for AC disconnect-detection function *(continued)*

Item	Parameter	Symbol	Unit	Min	Max	Additional information
	AC source output impedance					
2a	Source output current during the operation of the AC disconnect detection function	I_sac	mA		5	During operation of the AC disconnect detection function.
2b	PSE PI impedance during PD detection when measured at the PI of the PSE PI	R_rev	KΩ	45		Specified in 33.2.5 and Figure 33–8. Shown here to clarify the difference in PI impedance during the signature detection function.
	PSE PI voltage during AC disconnect detection					
3a	PI AC voltage when PD is connected	V_{CLOSE}	V_{pp}			See Table 33–5, item 3.
3b	PI voltage when PD is disconnected	V_{Port}	V_p		60	
3c	Disconnect detection time	T_{MPDO}	ms			See Table 33–5, item 7a.
	AC Maintain Power Signature					
4a	Shall not remove power from the PI	$\lvert Z_{ac1} \rvert$	KΩ		27	F_p = 5Hz, Testing voltage >2.5V. See Figure 33–10. Impedance shall have non-negative resistive component and a net capacitive reactive component.
4b	Shall remove power from the PI	$\lvert Z_{ac2} \rvert$	KΩ	1980		See Figure 33–11.

IEEE 802.3AF at 47, Table 33-6.

To the extent that Plaintiff contends that IEEE 802.3af does not explicitly or inherently disclose this element, or render obvious this element, this element is obvious in combination with one or more references and/or with the knowledge of a person of ordinary skill in the art, as set forth in Defendant's Invalidity Contentions.

Exhibit E-17

Claim 7		
7[p]	A method of delivering power to one of a plurality of devices connected in a daisy chain, the method comprising:	To the extent the preamble is limiting, IEEE 802.3af discloses this element and/or renders it obvious either alone or in combination with other references and/or the knowledge of one of ordinary skill in the art. *See, e.g.*: "This clause defines the functional and electrical characteristics of two optional power (non-data) entities, a Powered Device (PD) and Power Sourcing Equipment (PSE), for use with the physical layers defined in Clauses 14, 25, and 40. These entities allow devices to supply/draw power using the same generic cabling as is used for data transmission. DTE powering is intended to provide a 10BASE-T, 100BASE-TX, or 1000BASE-T device with a single interface to both the data it requires and the power to process these data. This clause specifies the following: a) A power source to add power to the 100Ω balanced cabling system, b) The characteristics of a powered device's load on the power source and the structured cabling, c) A protocol allowing the detection of a device that requires power, d) Optionally, a method to classify devices based on their power needs, and e) A method for scaling supplied power back to the detect level when power is no longer requested or required. The importance of item c) above should not be overlooked. Given the large number of legacy devices (both IEEE 802.3 and other types of devices) that could be connected to a 100Ω balanced cabling system, and the possible consequences of powering such devices, the protocol to distinguish compatible devices and noncompatible devices is important to prevent damage to non-compatible devices. The detection and powering algorithms are likely to be compromised by cabling that is multi-point as opposed to point-to-point, resulting in unpredictable performance and possibly damaged equipment. This clause differentiates between the two ends of the powered portion of the link, defining the PSE and the PD as separate but related devices." IEEE 802.3AF at 27. "PSE, as the name implies, is the equipment that provides the power to a single link section. The PSE's main functions are to search the link section for a PD, optionally classify the PD, supply power to the link section (only if a PD is detected), monitor the power on the link section, and scale

		power back to the detect level when power is no longer requested or required. An unplugged link section is one instance when power is no longer required." IEEE 802.3AF at 29. "In an operational mode, the PSE shall not apply operating power to the PI until the PSE has successfully detected a PD requesting power. The PSE is not required to continuously probe to detect a PD signature. The period of time when a PSE is not attempting to detect a PD signature is implementation dependent. Also, a PSE may successfully detect a PD, but may then opt not to power the detected PD. PSE operation is independent of data link status. The PSE shall turn on power only on the same pairs as those used for detection." IEEE 802.3AF at 37. "PD is a device that is either drawing power or requesting power by participating in the PD detection algorithm. A device that is capable of becoming a powered device may or may not have the ability to draw power from an alternate power source and, if doing so, may or may not require power from the PI. PD capable devices that are neither drawing nor requesting power are also covered in this clause. A PD is specified at the point of the physical connection to the cabling. Characteristics such as the losses due to voltage correction circuits, power supply inefficiencies, separation of internal circuits from external ground or other characteristics induced by circuits after the PI connector are not specified. Limits defined for the PD are specified at the PI, not at any point internal to the PD, unless specifically stated." IEEE 802.3AF at 49.

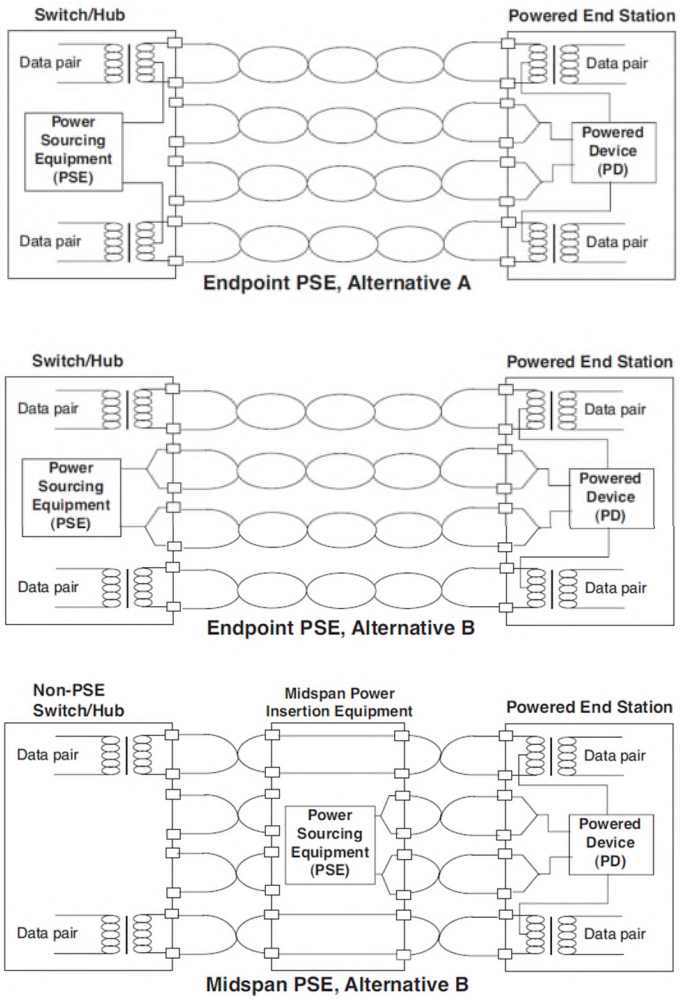

Figure 33–4—PSE location overview

IEEE 802.3AF at Fig. 33-4.

		<table><tr><td>PSE22</td><td>Probe link to detect all PDs which present a valid signature.</td><td>33.2.6.1</td><td>(19KΩ to 26.5KΩ DC resistance) and (120nF capacitance or less) and (Voltage offset of up to 2.0 volts DC) and (Current offset of up to 1µA).</td><td>M</td><td>Yes [ ]</td></tr></table> IEEE 802.3AF at 75. To the extent that Plaintiff contends that IEEE 802.3af does not explicitly or inherently disclose this element, or render obvious this element, this element is obvious in combination with one or more references and/or with the knowledge of a person of ordinary skill in the art, as set forth in Defendant's Invalidity Contentions.
7(a)	detecting a load in a first device of the plurality of devices including detecting a load current flowing through the load;	IEEE 802.3af discloses and/or renders obvious this limitation. *See* exemplary disclosures and corresponding discussion for claim element 1(d).
7(b)	extracting information from the first device based on the detected load current; and	IEEE 802.3af discloses and/or renders obvious this limitation. *See* exemplary disclosures and corresponding discussion for claim element 1(d).
7(c)	relaying power to the first device based on the extracted information;	IEEE 802.3af discloses and/or renders obvious this limitation. *See* exemplary disclosures and corresponding discussion for claim element 1(b)-1(e).
7(d)	wherein the information extracted comprises information regarding whether the first device is powered on or powered off, and whether or not the	IEEE 802.3af discloses and/or renders obvious this limitation. *See* exemplary disclosures and corresponding discussion for claim element 1(e).

	first device needs a supply of power.	