On-The-Go Supplement to the USB 2.0 Specification

Revision 1.0a

June 24, 2003

Revision History

Revision	Issue Date	Comment
0.7	11/07/2000	Revisions to all sections
0.8	04/06/2001	Revisions to all sections
0.9	09/05/2001	Revisions to all sections
1.0_rc1	10/15/2001	Minor edits to most sections Defined $T_{B_FS_BDIS}$ for high speed HNP.
1.0	12/18/01	Minor edits to several sections Defined $R_{A_PLUG_ID}$ and $R_{B_PLUG_ID}$
1.0aRC1	11/19/2002	Updates reflected in Errata release 1
1.0aRC2	January 23, 2003	Add definition of “OTG Device”
1.0aRC3	March 25, 2003	Clarify short versus long debounce and minor edits
1.0aRC4	March 28, 2003	Add figures clarifying long and short debounce and minor edits
1.0aRC5	April 30, 2003	Clarifying changes following review at April 23 face-to-face
1.0aRC6	June 13, 2003	Set copyright information
1.0a	June 24, 2003	Update contributor list, correct minor editorial errors in section 6

Universal Serial Bus Specification Supplement
Copyright © 2001, 2003 USB Implementers Forum, Inc. (USB-IF).
All rights reserved.

INTELLECTUAL PROPERTY DISCLAIMER
THIS SPECIFICATION IS PROVIDED TO YOU “AS IS” WITH NO WARRANTIES WHATSOEVER, INCLUDING ANY WARRANTY OF MERCHANTABILITY, NON-INFRINGEMENT, OR FITNESS FOR ANY PARTICULAR PURPOSE. THE AUTHORS OF THIS SPECIFICATION DISCLAIM ALL LIABILITY, INCLUDING LIABILITY FOR INFRINGEMENT OF ANY PROPRIETARY RIGHTS, RELATING TO USE OR IMPLEMENTATION OF INFORMATION IN THIS SPECIFICATION. THE PROVISION OF THIS SPECIFICATION TO YOU DOES NOT PROVIDE YOU WITH ANY LICENSE, EXPRESS OR IMPLIED, BY ESTOPPEL OR OTHERWISE, TO ANY INTELLECTUAL PROPERTY RIGHTS.

All product names are trademarks, registered trademarks, or servicemarks of their respective owners.

DELL/HP/LENOVO EXHIBIT 1016
Page 2

Contributors

Glen Chandler, Advanced-Connectek (Acon)
Chris Kolb, ARC International
Maria Pohlman, Aten
Ray Asbury, Cypress Semiconductor
Dave Cobbs, Cypress Semiconductor
Kosta Koeman, Cypress Semiconductor
David Wright, Cypress Semiconductor
Israel Zilberman, Cypress Semiconductor
Morten Christiansen, Ericsson
Ed Beeman, Hewlett-Packard
Matt Nieberger, Hewlett-Packard
Trung Le, Imation
Eric Huang, InSilicon
Dan Froelich, Intel Corp
Venkat Iyer, Intel Corp
Richard Lawrence, Intel Corp
Jeff Miller, Intel Corp
Francesco Liburdi, Lumberg
Ryan Hashimoto, Maxim
Paul E. Berg, MCCI
Terry Moore, MCCI
Rob Douglas, Mentor Graphics
Ian Parr, Mentor Graphics
Mark Hanson, Microsoft
Akira Aso, Molex
Mark Carlson, Motorola
Eric Overtoom, Motorola
Kazumasa Saito, NEC Systems
Esa Harma, Nokia
Mark Jenkins, Nokia
James Scales, Nokia
Sree Iyer, OnSpec
Peter Yi, Opti
Bill Stanley, Palm
Geert Knapen, Philips
Eric Lu, Philips
Chris Schell, Philips (Co-Chair)
Rik Stopel, Philips
Kenneth Tan, Philips
Jerome Tjia, Philips
David Wang, Philips
Hilbert Zhang, Philips
Keith Gallardo, Qualcomm
Terry Remple, Qualcomm (Co-Chair)
Joe Meza, SoftConnex
Dan Harmon, Texas Instruments
Jeff Kacines, Texas Instruments
Clarence Lewis, Texas Instruments
Richard Nie, Texas Instruments
Sue Vining, Texas Instruments
Joon Kim, TransDimension
Dave Murray, TransDimension
Jing Wang, TransDimension
David Wooten, TransDimension
Zong Liang Wu, TransDimension
Charles Brill, Tyco Electronics
Mark Paxson, USB-IF

DELL/HP/LENOVO EXHIBIT 1016
Page 3

DELL/HP/LENOVO EXHIBIT 1016
Page 4

Table of Contents

1. Introduction ... 1
- 1.1 General ... 1
- 1.2 Objective of the Supplement ... 1
- 1.3 Intended Audience ... 1

2. Acronyms and Terms ... 3

3. Significant Features ... 5
- 3.1 USB 2.0 Specification Compliance ... 5
- 3.2 Dual-role Device ... 5
- 3.3 Targeted Peripheral List ... 5
- 3.4 No Silent Failures ... 5
- 3.5 Supplying Current on VBUS ... 6
- 3.6 Session Request Protocol ... 6
- 3.7 Host Negotiation Protocol ... 6
- 3.8 Connectors ... 6
- 3.9 Compliant Cable Assemblies ... 6
- 3.10 Plug Overmolds ... 7
- 3.11 Cable Adapters ... 7
- 3.12 Hubs ... 7
- 3.13 Mandated Functionality ... 7

4. Mechanical ... 9
- 4.1 Introduction ... 9
- 4.2 Mini-Connector Mating ... 9
- 4.3 Color Coding ... 10
- 4.4 Device, Cable and Adapter Delays ... 10
- 4.5 Compliant Usage of Connectors and Cables ... 11
  - 4.5.1 Cables ... 11
  - 4.5.2 Overmolds ... 12
  - 4.5.3 Mechanical Interfaces ... 12
  - 4.5.4 Receptacle Reference Designs ... 12
  - 4.5.5 Connector Keying ... 12
  - 4.5.6 Right Angle Plugs ... 12
  - 4.5.7 Adapters ... 12
- 4.6 Drawings ... 13

5. Electrical Requirements ... 33
- 5.1 A-Device Electrical Requirements ... 33
  - 5.1.1 VBUS Output Voltage and Current ... 33
  - 5.1.2 VBUS Input Impedance ... 33
  - 5.1.3 VBUS Rise and Fall Time ... 34
  - 5.1.4 VBUS Capacitance ... 34
  - 5.1.5 VBUS Leakage Voltage ... 34
  - 5.1.6 Data Line Pull-down Resistance ... 34
  - 5.1.7 Data Line Pull-up Resistance ... 35
  - 5.1.8 Data Line Leakage Voltage ... 35
  - 5.1.9 Data Line Discharge Time ... 35
  - 5.1.10 VBUS Input Current Without Battery ... 36
- 5.2 B-Device Electrical Requirements ... 36
  - 5.2.1 VBUS Average Input Current ... 36
  - 5.2.2 VBUS Peak Input Current ... 36

DELL/HP/LENOVO EXHIBIT 1016
Page 5

5.2.3 VBUS Capacitance 36
5.2.4 Data Line Pull-down Resistance 36
5.2.5 Data Line Pull-up Resistance 37
5.2.6 Data Line Leakage Voltage 37
5.2.7 VBUS Input Current Without Battery 37
5.3 Session Request Protocol 37
5.3.1 Introduction 37
5.3.2 Initial Conditions 37
5.3.3 Data-line Pulsing 38
5.3.4 VBUS Pulsing 39
5.3.5 B-Device VBUS Pulsing Current 39
5.3.6 A-Device Session Valid 39
5.3.7 B-Device Session Valid 39
5.3.8 Duration of SRP 39
5.3.9 Order of Methods 40
5.3.10 Response Time of A-device 40
5.3.11 Repetition of SRP 40
5.4 Electrical Characteristics 41
5.5 Device Timings 43
6. Host Negotiation Protocol 50
6.1 Introduction 50
6.2 Description Priority 50
6.3 HNP Overview 50
6.4 OTG Descriptor 52
6.4.1 srp_support 52
6.4.2 hnp_support 52
6.5 Set Feature Commands 52
6.5.1 b_hnp_enable 53
6.5.2 a_hnp_support 53
6.5.3 a_alt_hnp_support 54
6.6 State Machine Parameters 54
6.6.1 Inputs 54
6.6.2 Internal Variables 58
6.6.3 Outputs 58
6.6.4 Informative Variables 58
6.6.5 Timers 59
6.6.6 Test Device Support 59
6.7 Timing Summary 60
6.7.1 B-device becoming Host 60
6.7.2 A-device becoming Peripheral 60
6.8 State Diagrams 61
6.8.1 Dual-role A-Device 62
6.8.2 Dual-Role B-Device 66
6.8.3 Peripheral-Only, B-Device 68

DELL/HP/LENOVO EXHIBIT 1016
Page 6

Figures

Figure 4-1 Mini-A to Mini-B Cable 14
Figure 4-2 Standard-B to Mini-A Cable 15
Figure 4-3 Mini-A to Captive Cable 16
Figure 4-4 Mini-A Plug Overmold, Straight 17
Figure 4-5 Mini-B Plug Overmold, Straight 18
Figure 4-6 Mini-A Plug Interface - 1 of 2 19
Figure 4-7 Mini-A Plug Interface - 2 of 2 20
Figure 4-8 Mini-A Receptacle Interface 21
Figure 4-9 Mini-AB Receptacle Interface 22
Figure 4-10 Mini-A Receptacle Reference Design 23
Figure 4-11 Mini-AB Receptacle Reference Design 24
Figure 4-12 Mini-A Plug Blockage 25
Figure 4-13 Mini-B Plug Blockage 26
Figure 4-14 Mini-A Plug, Side Right Angle 27
Figure 4-15 Mini-A Plug, Down Right Angle 28
Figure 4-16 Mini-B Plug, Side Right Angle 29
Figure 4-17 Mini-B Plug, Down Right Angle 30
Figure 4-18 Adapter, Standard-A receptacle to Mini-A plug 31
Figure 4-19 Adapter, Mini-A receptacle to Standard-A plug 32
Figure 5-1 A-device Input Impedance (VBUS not driven) 33
Figure 5-2 A-device SRP Timing Reference 45
Figure 5-3 A-device HNP Timing Reference (FS) 45
Figure 5-4 A-device HNP Timing Reference (HS) 46
Figure 5-5 B-device SRP Timing Reference 48
Figure 5-6 B-device HNP Timing Reference (FS) 48
Figure 5-7 B-device HNP Timing Reference (HS) 49
Figure 6-1 HNP Sequence of Events 51
Figure 6-2 Dual-Role A-device State Diagram 62
Figure 6-3 Dual-Role B-device State Diagram 66
Figure 6-4 SRP Capable Peripheral-Only B-device State Diagram 68

DELL/HP/LENOVO EXHIBIT 1016
Page 7

Tables

Table 4-1. Plugs Accepted By Receptacles 9
Table 4-2. Mini-A Plug Pin Assignments 10
Table 4-3. Color Coding for Plugs and Receptacles 10
Table 4-4. Maximum Delay for Mini-Connector and Cable 11
Table 4-5. Maximum Delay for Standard Connector Cable 11
Table 5-1. DC Electrical Characteristics 41
Table 5-2. A-device Timing 43
Table 5-3. B-device Timing 44
Table 5-4. Device Timing Comparison 47
Table 6-1. OTG Descriptor 52
Table 6-2. Set Feature Command Format 53
Table 6-3. On-The-Go Feature Selectors 53
Table 6-4. Dual-Role Device Timers 59

DELL/HP/LENOVO EXHIBIT 1016
Page 8

1. Introduction

1.1 General

USB has become a popular interface for exchanging data between PC's and peripherals. An increasing number of portable peripherals are using the USB interface to communicate with the PC. Many of these portable devices would benefit from being able to communicate to each other over the USB interface, yet certain aspects of USB make this difficult to achieve.

Specifically, USB communication can only take place between a host and a peripheral. However, in order to qualify as a PC host, a device must have several characteristics, including:

- storage for a large number of device drivers,
- the ability to source a large current, and
- a Series "A" host connector receptacle.

It is not practical for many portable devices to have all of the above characteristics, and in many cases, these characteristics are not needed in order to interface portable devices with each other.

In order to enable these limited-requirement, portable USB applications, this supplement to the USB 2.0 specification was developed that allows a portable device to take on the role of a limited USB host, without the burden of supporting all the above functions of a PC.

1.2 Objective of the Supplement

The objective of this supplement is to define a minimal set of changes to the USB 2.0 specification, such that portable USB applications are enabled.

This is not a stand-alone document. It is a supplement to the USB 2.0 specification. Any aspects of USB that are not specifically changed by this supplement are governed by the USB 2.0 specification.

1.3 Intended Audience

This specification is targeted to developers of PC peripherals and portable consumer electronic devices.

DELL/HP/LENOVO EXHIBIT 1016
Page 9

DELL/HP/LENOVO EXHIBIT 1016
Page 10

2. Acronyms and Terms

This chapter lists and defines terms and abbreviations used throughout this specification.

A-Device A device with a Standard-A or Mini-A plug inserted into its receptacle. An A-device supplies power to VBUS; is host at the start of a session; and under certain conditions as described in Section 6, the A-device will relinquish the role of host to a dual-role B-device.

Application A generic term referring to any software that is running on a device that can control the behavior or actions of the USB port(s) on a device.

B-Device A device with a Standard-B or Mini-B plug inserted into its receptacle. The B-device is a peripheral at the start of a session. If the device is dual-role, it may be granted the role of host from the A-device (see Section 6).

Dual-role device A device that has the following features and characteristics:

- limited Host capability
- full-speed operation as peripheral (high-speed optional)
- full-speed support as host (low-speed and high-speed optional)
- Targeted Peripheral List
- Session Request Protocol
- Host Negotiation Protocol
- one, and only one, Mini-AB receptacle
- minimum 8 mA output on VBUS
- means for communicating messages to the user

FS Full Speed

HS High Speed

Host A physical entity that is attached to a USB cable and is acting in the role of the USB host as defined in the USB Specification, Revision 2.0. This entity initiates all data transactions and provides periodic Start of Frames (SOF's).

HNP Host Negotiation Protocol. (See Section 6.)

ID Identification. Denotes the pin on the Mini connectors that is used to differentiate a Mini-A plug (ID pin resistance to ground < 10Ω) from a Mini-B plug (ID pin resistance to ground greater than 100 kΩ).

OTG On-The-Go

OTG device See Dual-role device

Peripheral A physical entity that is attached to a USB cable and is currently operating as a "device" as defined in the USB Specification, Revision 2.0. The Peripheral responds to low level bus requests from the Host.

DELL/HP/LENOVO EXHIBIT 1016
Page 11

SE0	Single Ended Zero
Session	The period of time that V_{BUS} is above a device's session valid threshold. For an A-device, the session valid threshold is $V_{A_SESS_VLD}$, while for a B-device it is $V_{B_SESS_VLD}$.
SOF	Start of Frame
SRP	Session Request Protocol
Targeted Peripheral List	A list of USB peripherals that a particular dual-role device can support when it is acting as a host.
USB	Universal Serial Bus
USB-IF	USB Implementers Forum

DELL/HP/LENOVO EXHIBIT 1016
Page 12

3. Significant Features

This section identifies the significant features of the OTG supplement. The purpose of this section is not to present all the technical details associated with each major feature, but rather to highlight its existence. Where appropriate, this section references other parts of the document where further details can be found.

3.1 USB 2.0 Specification Compliance

Any device with OTG features is first and foremost a USB peripheral that is compliant with the USB 2.0 specification.

3.2 Dual-role Device

In addition to being a fully compliant USB 2.0 peripheral, a dual-role device must include the following features and characteristics:

- a limited Host capability
- full-speed operation as a peripheral (high-speed optional)
- full-speed support as a host (low-speed and high-speed optional)
- Targeted Peripheral List
- Session Request Protocol
- Host Negotiation Protocol
- one, and only one, Mini-AB receptacle
- minimum 8 mA output on V_{BUS}
- means for communicating messages to the user

3.3 Targeted Peripheral List

When acting as Host, a dual-role device is not required to support operation with all other types of USB peripherals. It is up to the manufacturer of each dual-role device to determine what peripherals the dual-role device will support and provide a list of those peripherals. This is the called the dual-role device's "Targeted Peripheral List".

In its most primitive form, the Targeted Peripheral List is simply a list of peripherals, where each peripheral is identified by a manufacturer, the kind of the device, and a model number.

The Targeted Peripheral List may also contain defined OTG peripheral types, such as an "OTG keyboard", or an "OTG camera", etc. In order to qualify as a member of one of these OTG peripheral types, a peripheral would need to exhibit the electrical and software characteristics defined for that OTG peripheral type.

3.4 No Silent Failures

Whenever the cabling allows USB devices to be connected, and the devices do not support the type of communication being requested by the user, then the devices shall provide messages to the user that allow him or her to understand the problem, and correct it if possible. Insofar as is possible, the messages shall be self explanatory, and shall not require the user to reference a manual or other additional material.

For example, if a B-device generates SRP, the A-device may try to give control to the B-device by trying to enable HNP. The B-device may not be HNP capable. The A-device may determine that the B-device is not HNP capable because the B-device is LS or because the B-device STALL's the command that enables HNP. When the A-device determines that the B-device is not HNP capable and that the B-device is not supported, the A-device is responsible for providing an informative message to the user

DELL/HP/LENOVO EXHIBIT 1016
Page 13

that the B-device is not supported. If, however, the B-device is HNP capable it will have responsibility for informing the user if the A-device is not supported.

3.5 Supplying Current on VBUS

A dual-role device must be able to source a minimum of 8 mA on VBUS when it is the A-device and a session is in progress.

3.6 Session Request Protocol

The OTG supplement defines a Session Request Protocol (SRP), which allows a B-device to request the A-device to turn on VBUS and start a session. This protocol allows the A-device, which may be battery powered, to conserve power by turning VBUS off when there is no bus activity while still providing a means for the B-device to initiate bus activity.

Any A-device, including a PC or laptop, is allowed to respond to SRP. Any B-device, including a standard USB peripheral, is allowed to initiate SRP. A dual-role device is required to be able to initiate and respond to SRP.

The details of this protocol are found in Section 5.3.

3.7 Host Negotiation Protocol

The Host Negotiation Protocol (HNP) allows the Host function to be transferred between two directly connected dual-role devices and eliminates the need for a user to switch the cable connections in order to allow a change in control of communications between the devices. HNP will typically be initiated in response to input from the user or an Application on the dual-role B-device. HNP may only be implemented through the Mini-AB receptacle on a device.

3.8 Connectors

The USB 2.0 specification defines the following connectors:

- Standard-A plug and receptacle,
- Standard-B plug and receptacle, and
- Mini-B plug and receptacle.

The OTG supplement defines the following additional connectors:

- Mini-A plug and receptacle, and
- Mini-AB receptacle.

The Mini-A receptacle can only be used in the Mini-A receptacle to Standard-A plug adapter defined in Section 4.5.7.1. All other uses are prohibited.

3.9 Compliant Cable Assemblies

The USB 2.0 specification defines the following cables:

- Standard-A plug to Standard–B plug,
- Standard-A plug to Mini-B plug, and
- Captive cable with Standard-A plug.

DELL/HP/LENOVO EXHIBIT 1016
Page 14

The OTG supplement defines the following additional cables:

- Mini-A plug to Mini-B plug,
- Mini-A plug to Standard-B plug, and
- Captive cable with Mini-A plug.

No other types of cables are allowed by either the USB specification, or by the OTG supplement. Cables are not allowed to have receptacles on either end unless they meet the mechanical and electrical requirements of adapters defined in Section 4.5.7.

3.10 Plug Overmolds

The USB 2.0 specification limits the maximum size of the overmold for the Mini-B plug on the Standard-A to Mini-B cable, but it does not define the shape of the overmold. The OTG supplement constrains the size and the shape of the overmolds for the Mini-A plug. This supplement also constrains the size and shape of the overmolds for the Mini-B plugs if those plugs are used on any of the new cables specified in this supplement.

The Mini-A plug's overmold has an oval theme, and the Mini-B plug's overmold has a rectangular theme. This allows easy recognition and differentiation of the two plugs by the consumer.

3.11 Cable Adapters

The OTG supplement defines the following cable adapters:

- Mini-A receptacle to Standard-A plug, and
- Standard-A receptacle to Mini-A plug.

The first adapter allows a captive cable device with a Mini-A plug to be connected to a standard host. The second adapter allows a captive cable device with a Standard-A plug to be connected to a dual-role device.

The physical and electrical properties of cable adapters are defined in Section 4.5.7.

3.12 Hubs

Dual-role devices may support hubs. However, the signaling methods used for the Session Request Protocol and the Host Negotiation Protocol are not handled by standard USB hubs. Therefore, when an A-device is directly connected to a standard hub, the A-device is prohibited from issuing a command that would enable the downstream device to expect or initiate HNP.

3.13 Mandated Functionality

Any device with a Mini-AB receptacle shall meet all of the requirements and provide all the functionality of a dual-role device.

DELL/HP/LENOVO EXHIBIT 1016
Page 15

DELL/HP/LENOVO EXHIBIT 1016
Page 16

4. Mechanical

This chapter provides the mechanical and electrical specifications for the cables, connectors, and cable assemblies used to interconnect devices.

4.1 Introduction

The USB 2.0 specification defines three connector pairs:

- Standard-A plug and receptacle for the host;
- Standard-B plug and receptacle for the peripheral; and
- Mini-B plug and receptacle as alternative connectors for the peripheral.

This supplement defines the following connector components:

- Mini-A plug,
- Mini-A receptacle, and
- Mini-AB receptacle.

The Mini-AB receptacle accepts either a Mini-A plug or a Mini-B plug.

This supplement defines the use of the new connector components on cables and adapters and permits the following combinations:

- Mini-A plug to Mini-B plug cable,
- Mini-A plug to Standard-B plug cable,
- Mini-A plug to captive cable,
- Mini-A receptacle to Standard-A plug adapter, and
- Standard-A receptacle to Mini-A plug adapter.

Constraints on the design of the overmolds for the Mini-A plugs are provided in this section. Additionally, new constraints are placed on the design of the overmold for the Mini-B plugs when used on a cable that also has a Mini-A plug.

4.2 Mini-Connector Mating

The following table summarizes the plugs accepted by each of the receptacles.

Table 4-1. Plugs Accepted By Receptacles

Receptacle	Plugs Accepted
Standard-A	Standard-A
Standard-B	Standard-B
Mini-B	Mini-B
Mini-A	Mini-A
Mini-AB	Mini-A or Mini-B

DELL/HP/LENOVO EXHIBIT 1016
Page 17

The usage and wiring assignments of the five pins in the Mini-A plug are defined in the following table.

Table 4-2. Mini-A Plug Pin Assignments

Contact Number	Signal Name	Typical Wiring Assignment
1	VBUS	Red
2	D-	White
3	D+	Green
4	ID	< 10 Ω to GND
5	GND	Black
Shell	Shield	Drain Wire

The ID pin on a Mini-A plug shall be connected to the GND pin. The ID pin on a Mini-B plug is not connected or is connected to ground by a resistance of greater than $R_{B_PLUG_ID}$. A dual-role device is required to be able to detect whether a Mini-A or Mini-B plug is inserted by determining if the ID pin resistance to ground is less than $R_{A_PLUG_ID}$ or if the resistance to ground is greater than $R_{B_PLUG_ID}$. Any ID resistance less than $R_{A_PLUG_ID}$ shall be treated as ID = FALSE and any resistance greater than $R_{B_PLUG_ID}$ shall be treated as ID = TRUE.

4.3 Color Coding

The following colors are mandated for the plastic inside the Mini connectors defined in this supplement.

Table 4-3. Color Coding for Plugs and Receptacles

Connector	Color
Mini-A receptacle	White
Mini-A plug	White
Mini-B receptacle	Black
Mini-B plug	Black
Mini-AB receptacle	Gray

4.4 Device, Cable and Adapter Delays

In Figure 7-11 of the USB 2.0 specification, four test planes are defined along the transmission path from the host transceivers to the peripheral transceivers. These test planes (TP) are as follows:

- TP1: pins of host transceiver chip
- TP2: contact points of host Standard-A receptacle
- TP3: contact points of peripheral Standard-B or Mini-B receptacle
- TP4: pins of peripheral transceiver chip

DELL/HP/LENOVO EXHIBIT 1016
Page 18

Section 7.1.16 of the USB 2.0 specification states that the maximum allowed delays between these test planes are:

- TP1 to TP2: 3 ns
- TP2 to TP3: 26 ns
- TP3 to TP4: 1 ns

Since the OTG supplement allows the addition of an adapter to a cable, the delays between the test planes for dual-role devices needs to be modified so that the maximum total delay between TP1 and TP4 is 30 ns. The limits are as follows:

- Dual-role device - TP1 to TP2: 1 ns
- Adapter: 1 ns
- Any cable with a Mini-A plug: 25 ns

The maximum delays for the two worst cases of connection are shown in the following tables.

Table 4-4. Maximum Delay for Mini-Connector and Cable

Location	Delay Time
USB 2.0 Compliant Host – TP1 to TP2	3 ns
Standard-A plug to Mini-A receptacle adapter	1 ns
Mini-A plug to Mini-B plug cable	25 ns
USB 2.0 Compliant B-device – TP3-TP4	1 ns
Total	30 ns

Table 4-5. Maximum Delay for Standard Connector Cable

Location	Delay Time
On-The-Go Compliant Dual-Role Device – TP1 to TP2	1 ns
Mini-A plug to Standard-A receptacle adapter	1 ns
Standard-A plug to Standard-B plug cable	26 ns
USB 2.0 Compliant B-device – TP3 to TP4	1 ns
Total	29 ns

4.5 Compliant Usage of Connectors and Cables

Cable assemblies and connectors not described below or not allowed by other amendments to the USB specification are not compliant with the USB specification and may not be labeled as such.

4.5.1 Cables

The new cables allowed by the OTG supplement are shown in Figure 4-1, Figure 4-2 and Figure 4-3. A cable with a Mini-A plug must have a propagation delay of 25 ns or less, have a physical length of no more than 4.5 meters, and meet all other requirements of a USB cable.

DELL/HP/LENOVO EXHIBIT 1016
Page 19

4.5.2 Overmolds

The size and shape of the Mini-A plug overmold must conform to the constraints shown in Figure 4-4.

The size of a Mini-B plug used on a Standard-A to Mini-B cable must conform to the constraints shown in Figure 6-10 in the Engineering Change Notice #1 of the USB Specification, version 2.0.

The size and shape of a Mini-B plug used in any other cable or adapter assembly must conform to the constraints shown in Figure 4-5.

It is recommended that all new designs for the Mini-B plug overmold follow the constraints in Figure 4-5.

4.5.3 Mechanical Interfaces

The mechanical interfaces for the Mini-A plug, Mini-A receptacle and Mini-AB receptacle are shown in Figure 4-6, Figure 4-7, Figure 4-8 and Figure 4-9.

4.5.4 Receptacle Reference Designs

Figure 4-10 and Figure 4-11 show reference designs for the Mini-A and Mini-AB receptacles respectively. By following these recommendations, receptacles from different manufacturers can be used interchangeably on the same printed circuit boards.

4.5.5 Connector Keying

This Mini connector series has been designed so as to prevent the Mini-A and Mini-B plugs from being incorrectly inserted into a receptacle. The amount of metal blocking various possible incorrect insertions is shown in Figure 4-12 and Figure 4-13, and is always greater than 0.35 mm.

4.5.6 Right Angle Plugs

The overmolds for right angle plugs are required to comply with the same shape constraints that apply to straight plugs. Reference drawings for right angle plugs are shown in Figure 4-14, Figure 4-15, Figure 4-16 and Figure 4-17.

4.5.7 Adapters

The following adapters are permitted; all others are prohibited.

The propagation delay of the adapter shall be less than 1 ns. The physical length shall not exceed 150 mm. The resistance of the adapter through V_{BUS} and GND, including contacts, shall not exceed 70 mΩ.

The only compliant adapters are:

- Standard-A receptacle to Mini-A plug, and
- Mini-A receptacle to Standard-A plug.

The reasons for not allowing a Series-B adapter include:

- all legal connection topologies can be achieved with the defined cables and adapters, and
- a Series-B adapter would make it possible to exceed the maximum TP1 to TP4 delay of 30 ns.

DELL/HP/LENOVO EXHIBIT 1016
Page 20

4.5.7.1 Mini-A receptacle to Standard-A plug

This adapter is used to connect a cable with a Mini-A plug to a USB host or hub with a Standard-A receptacle. A reference drawing for this adapter is shown in Figure 4-18.

4.5.7.2 Standard-A receptacle to Mini-A plug

This adapter is used to connect a cable with a Standard-A plug to a dual-role device that has a Mini-AB receptacle. A reference drawing for this adapter is shown in Figure 4-19.

4.6 Drawings

This section contains the mechanical drawings that are referenced in the previous section.

DELL/HP/LENOVO EXHIBIT 1016
Page 21

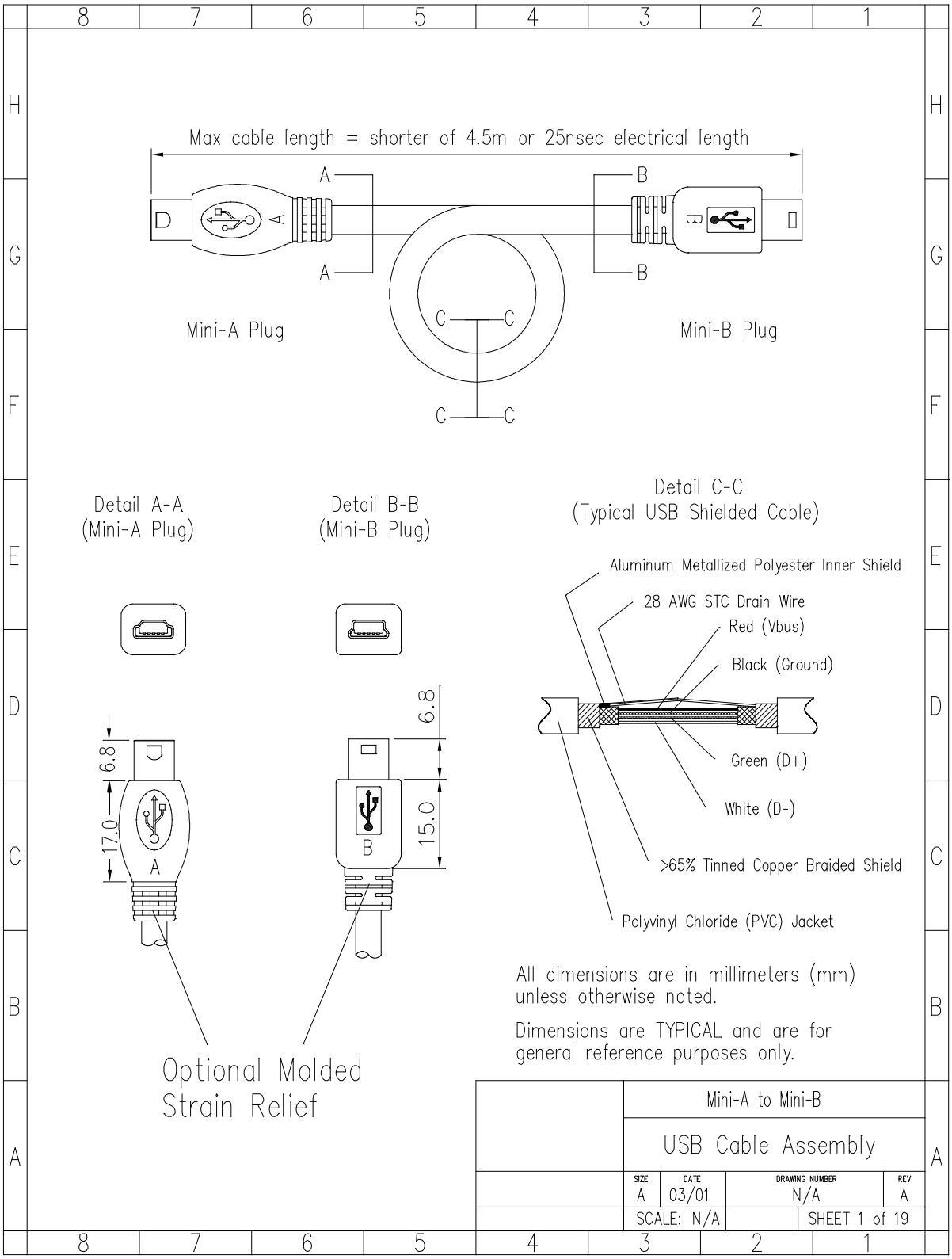

Figure 4-1 Mini-A to Mini-B Cable

DELL/HP/LENOVO EXHIBIT 1016
Page 22

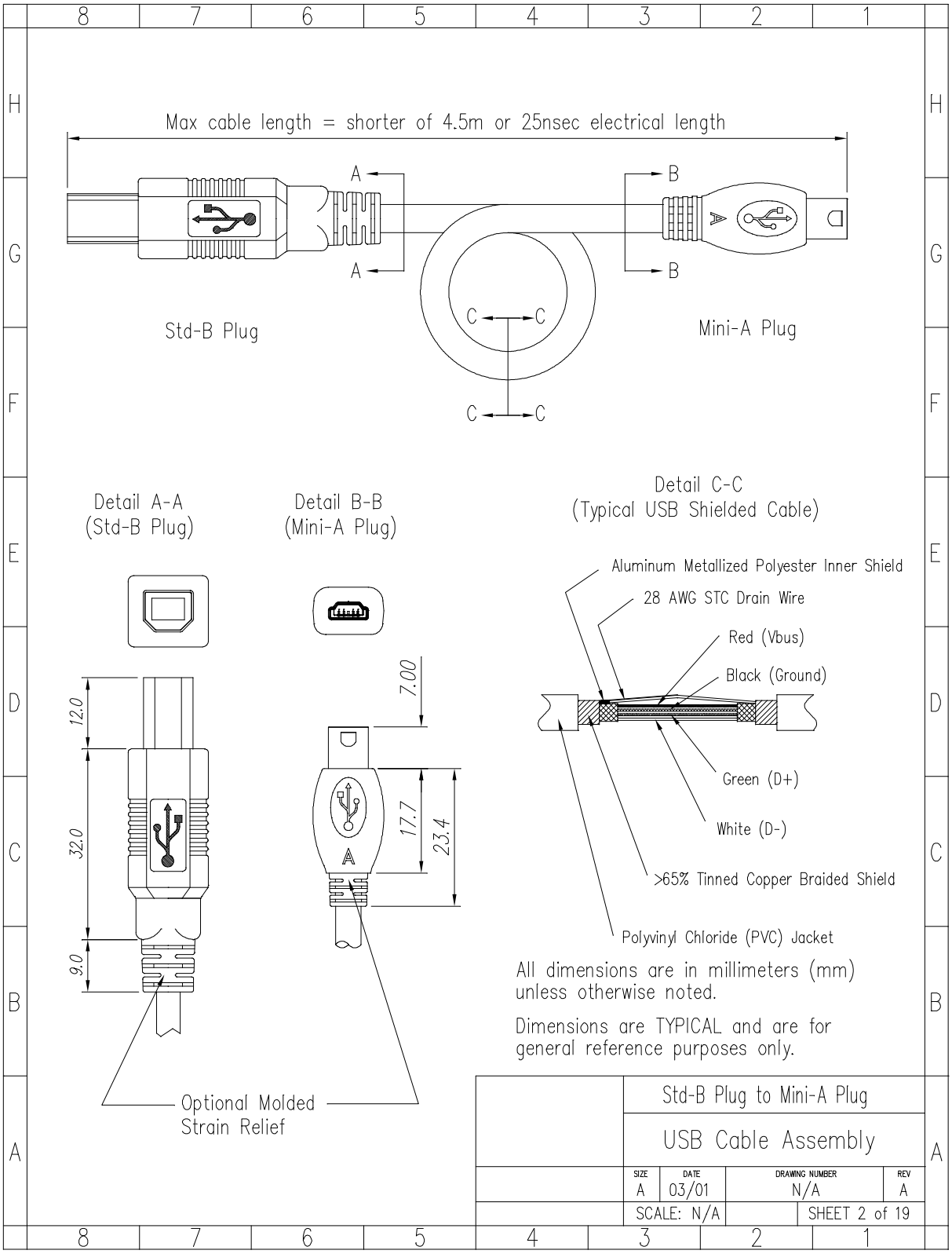

Figure 4-2 Standard-B to Mini-A Cable

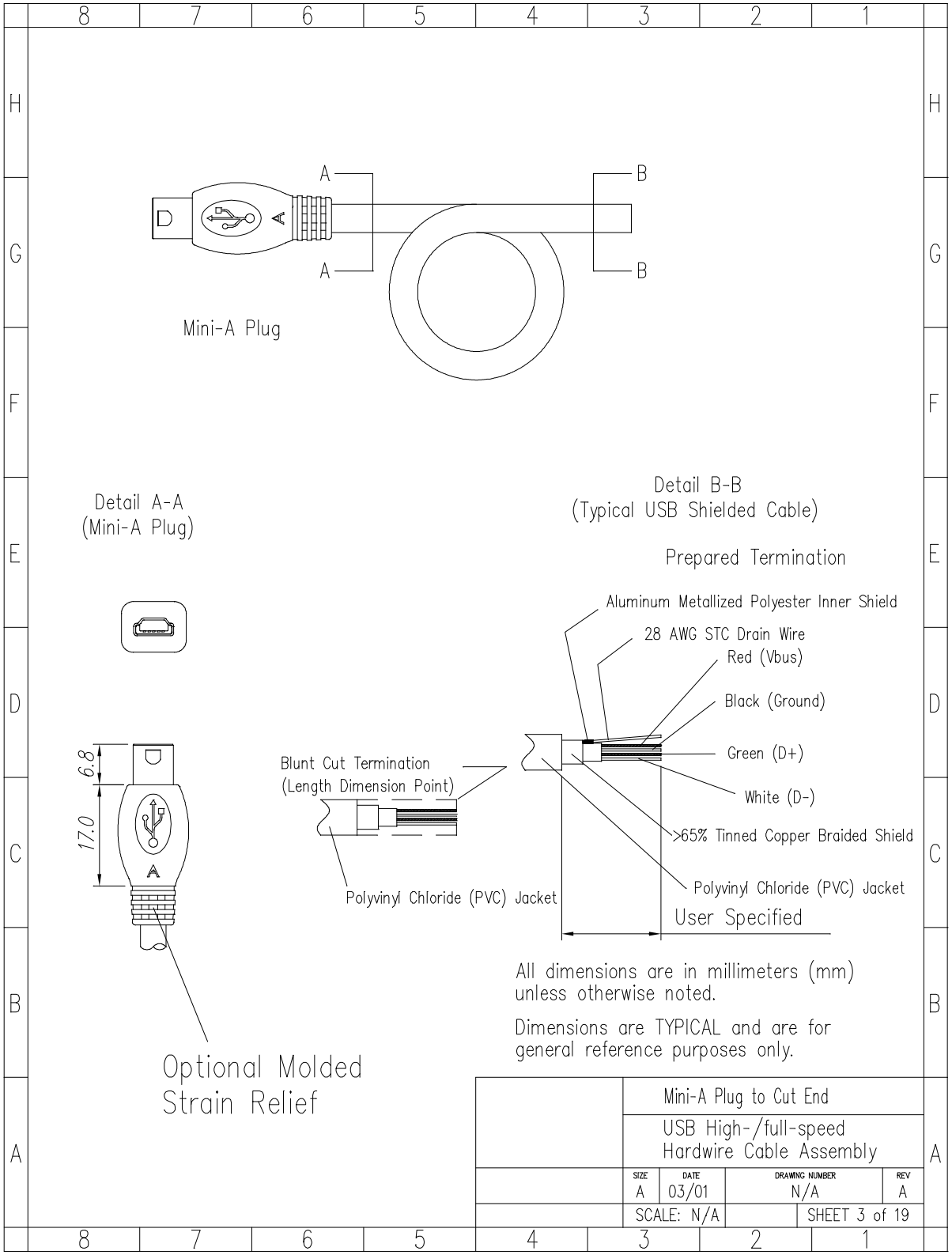

Figure 4-3 Mini-A to Captive Cable

DELL/HP/LENOVO EXHIBIT 1016
Page 24

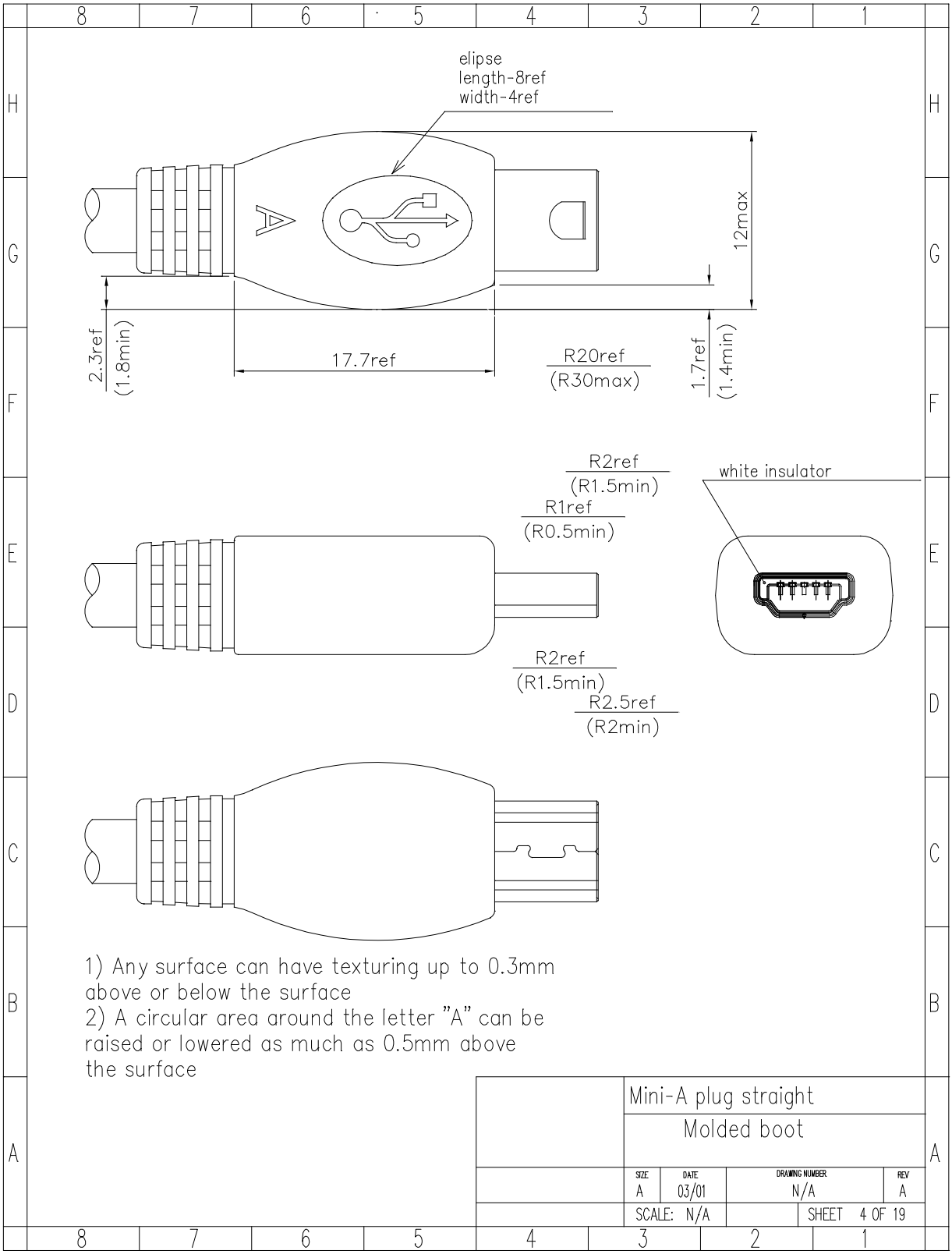

Figure 4-4 Mini-A Plug Overmold, Straight

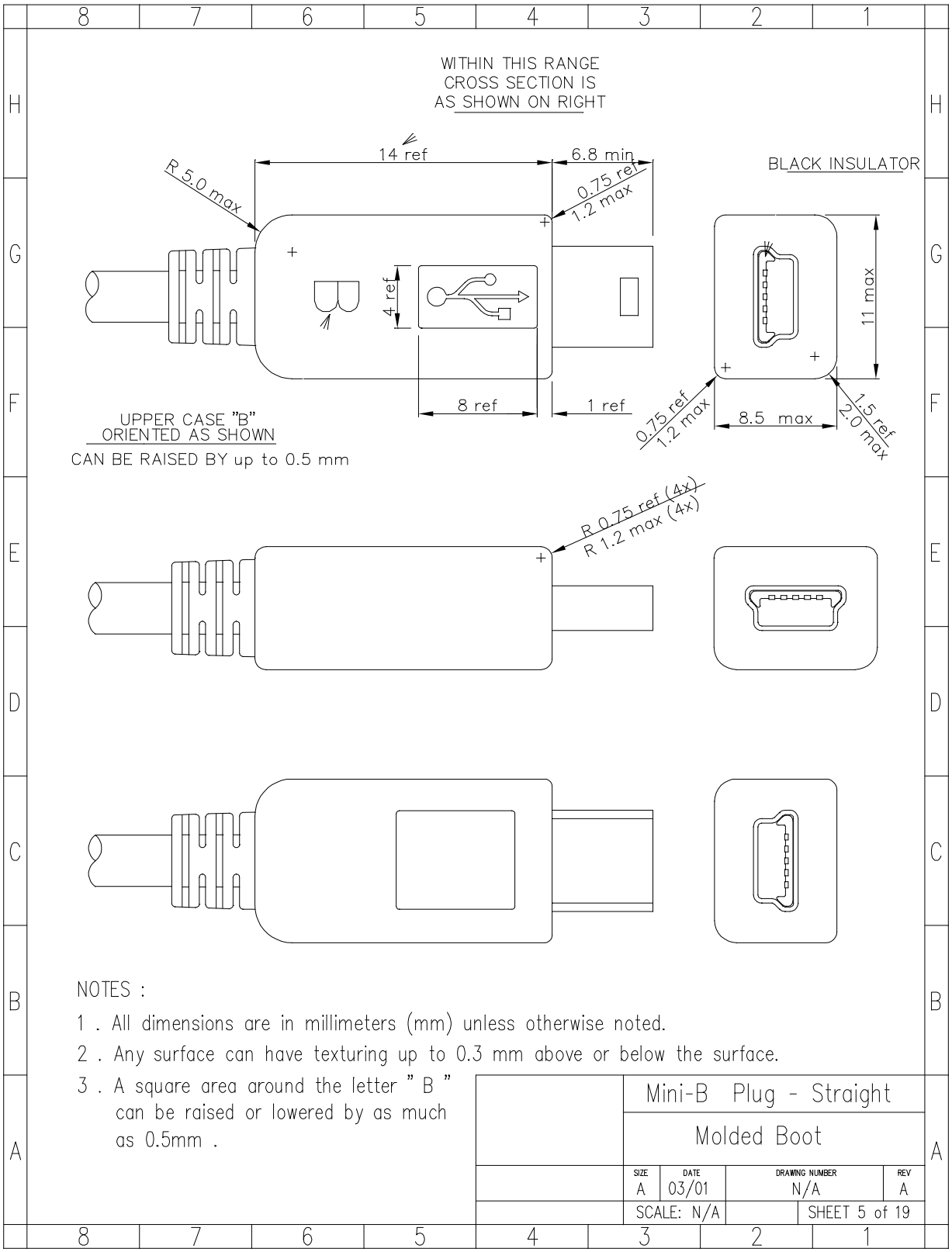

Figure 4-5 Mini-B Plug Overmold, Straight

DELL/HP/LENOVO EXHIBIT 1016
Page 26

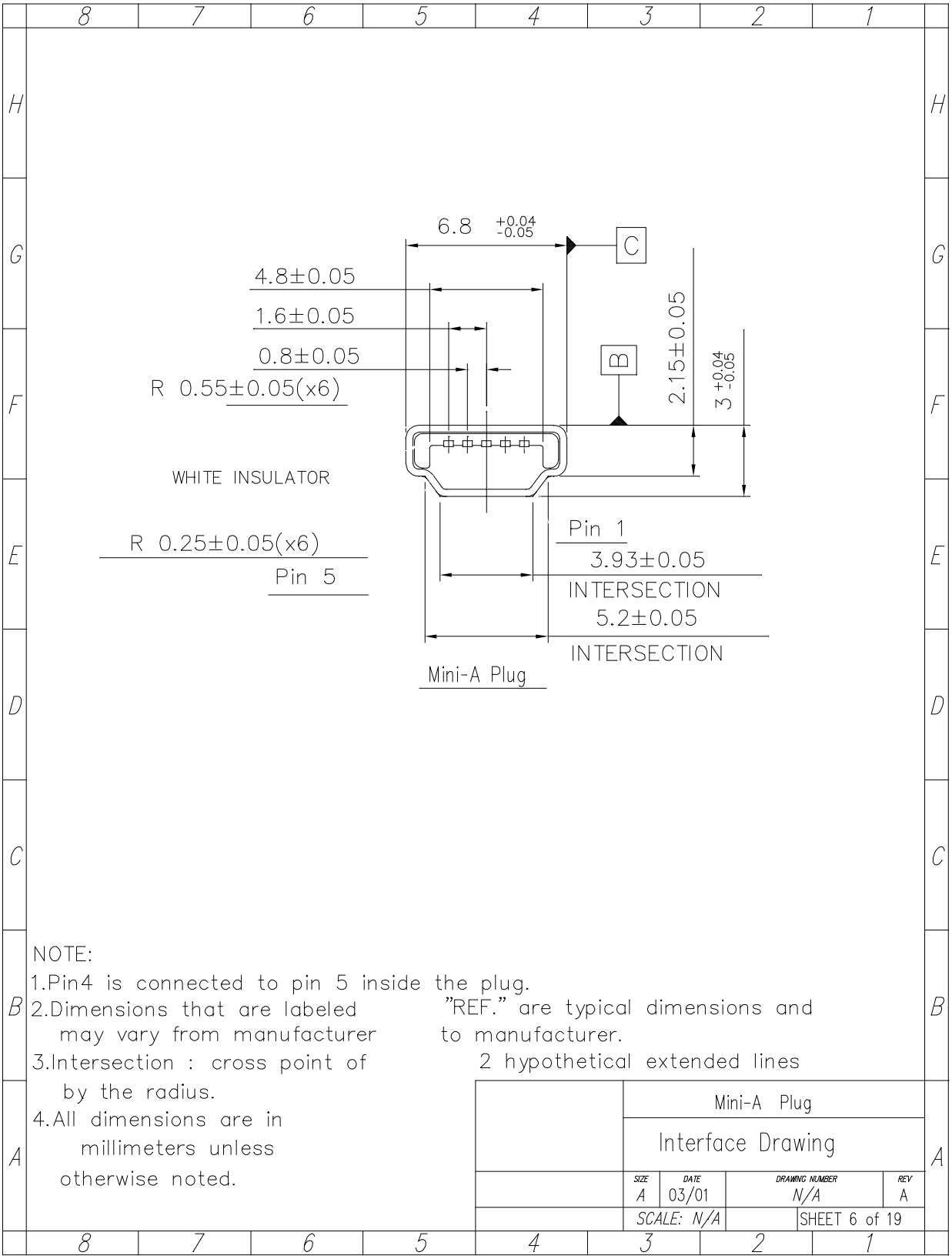

Figure 4-6 Mini-A Plug Interface - 1 of 2

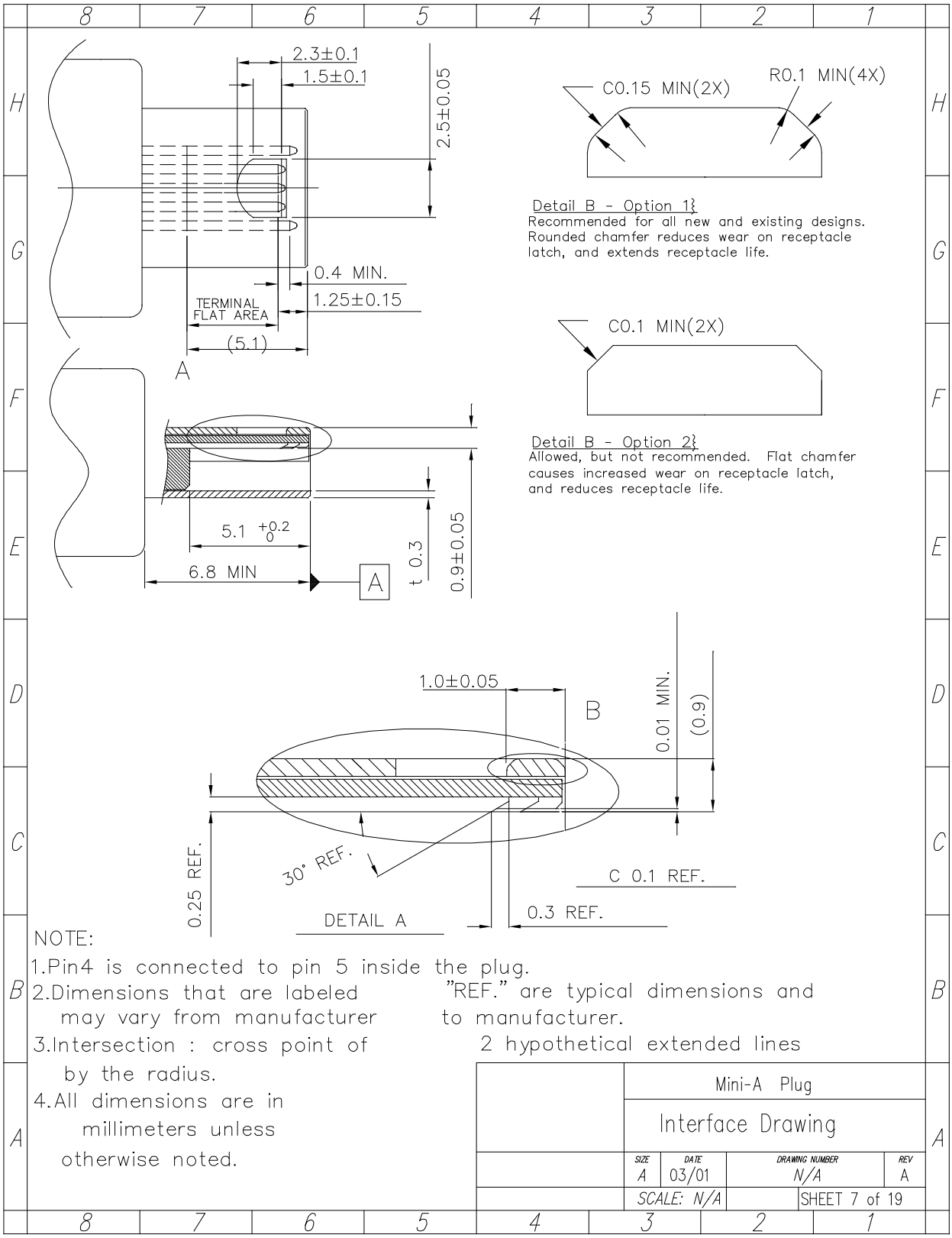

Figure 4-7 Mini-A Plug Interface - 2 of 2

DELL/HP/LENOVO EXHIBIT 1016
Page 28

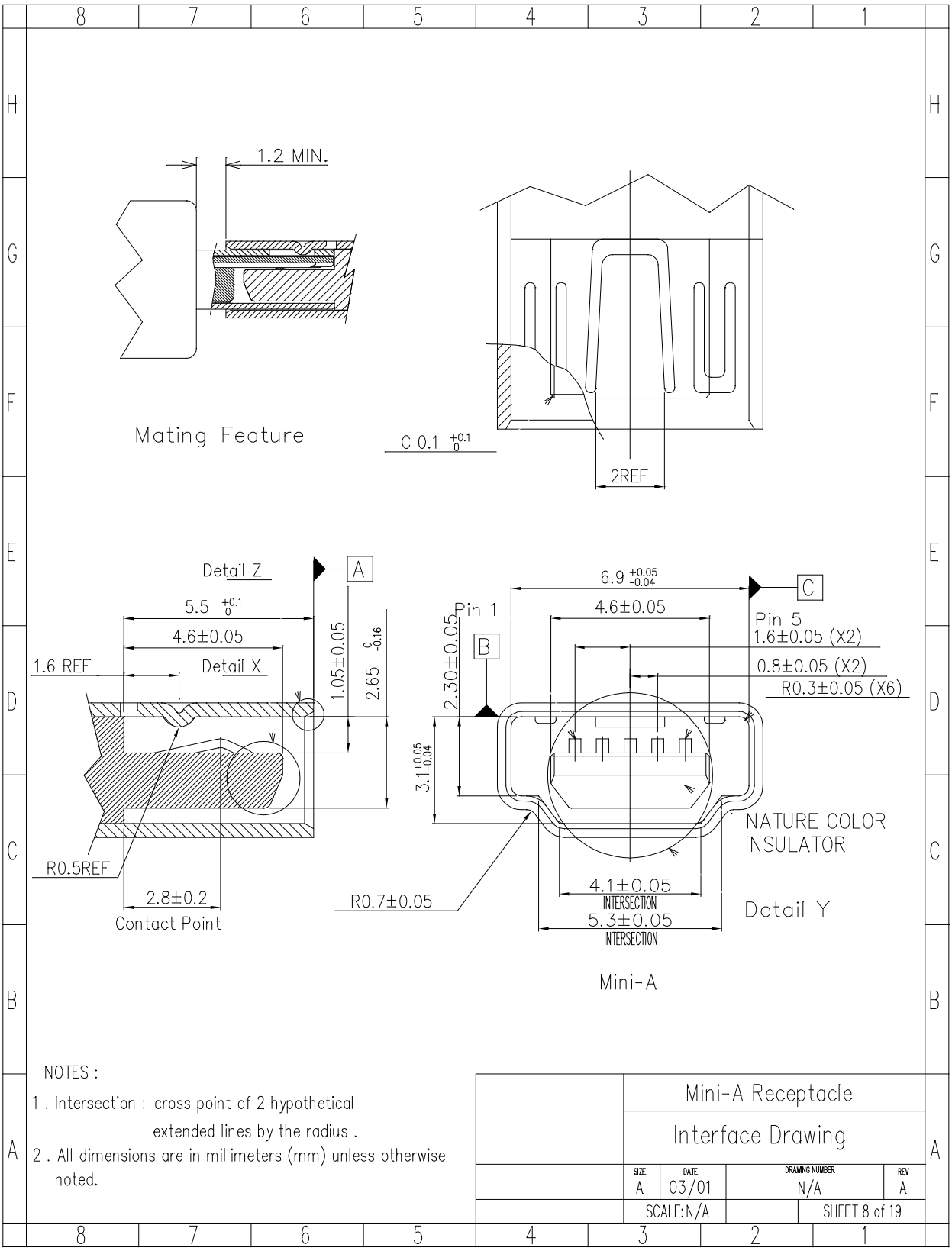

Figure 4-8 Mini-A Receptacle Interface

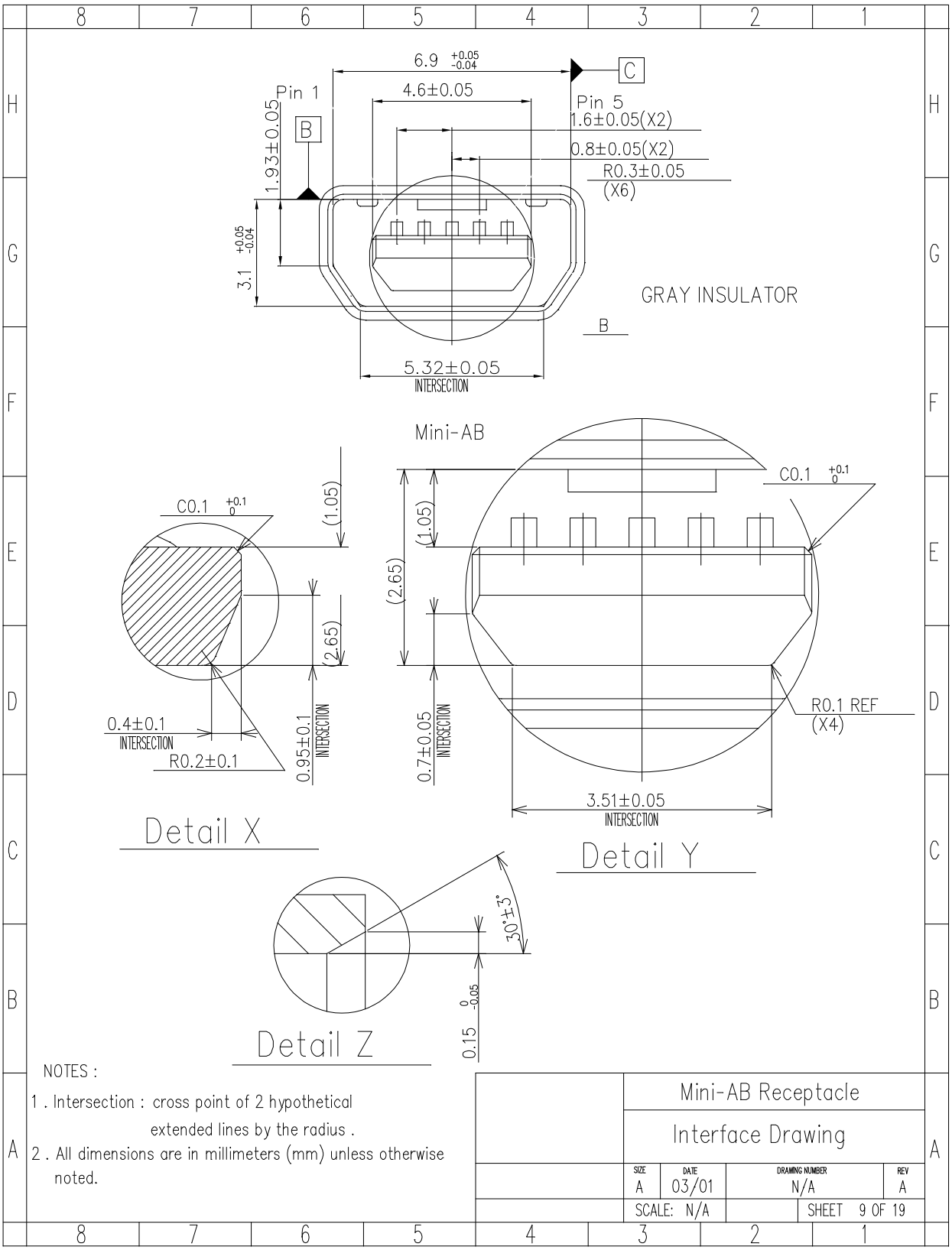

Figure 4-9 Mini-AB Receptacle Interface

DELL/HP/LENOVO EXHIBIT 1016
Page 30

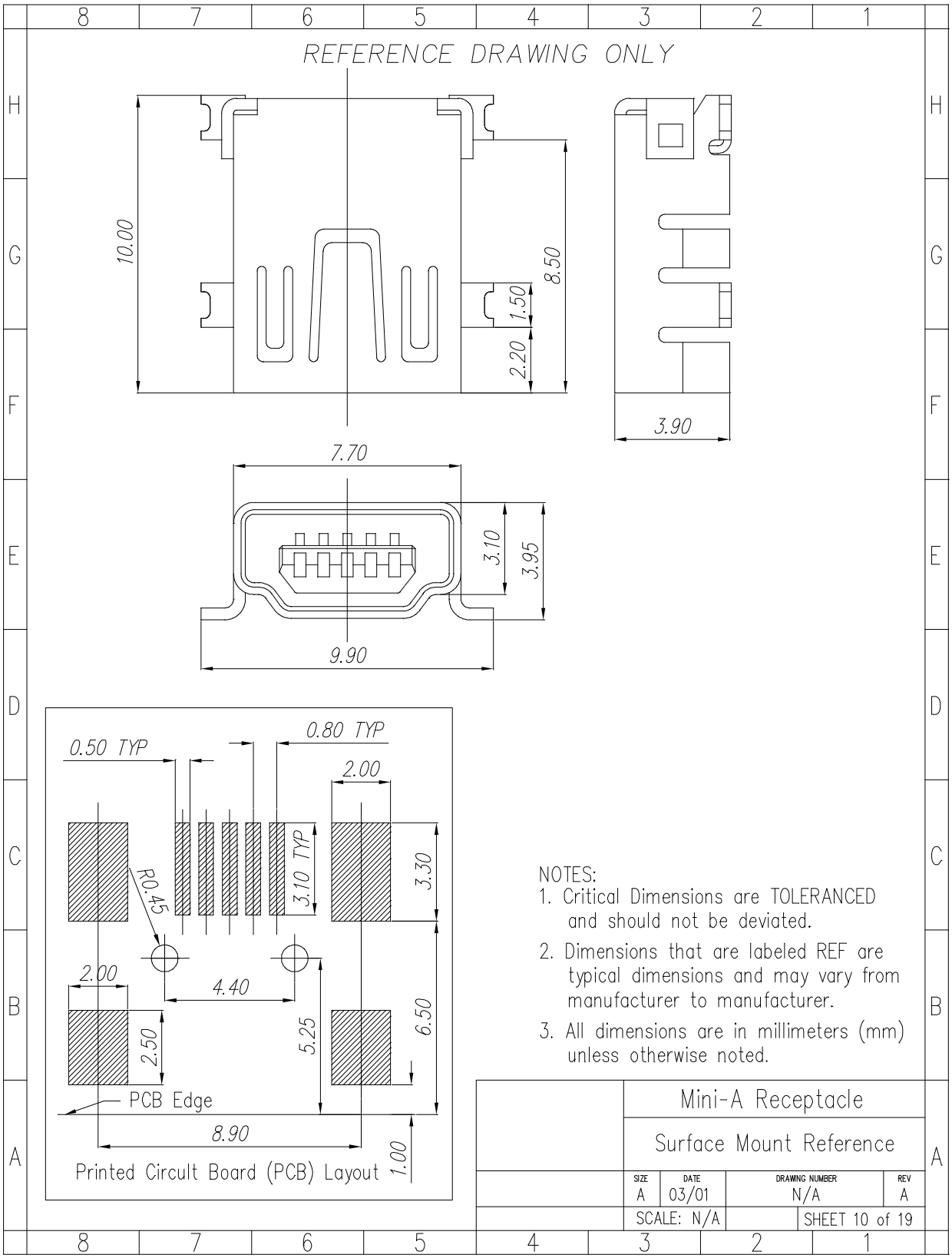

Figure 4-10 Mini-A Receptacle Reference Design

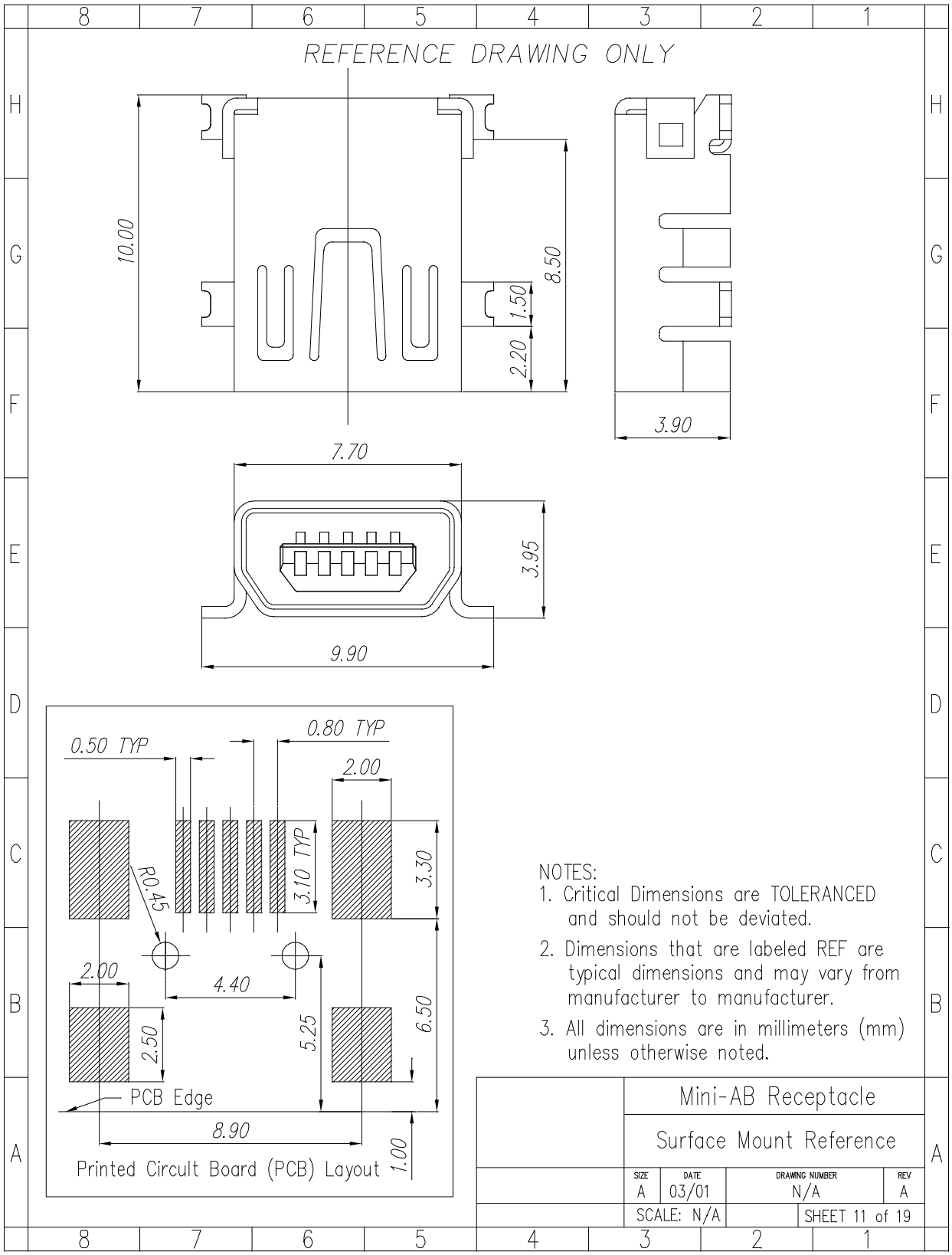

Figure 4-11 Mini-AB Receptacle Reference Design

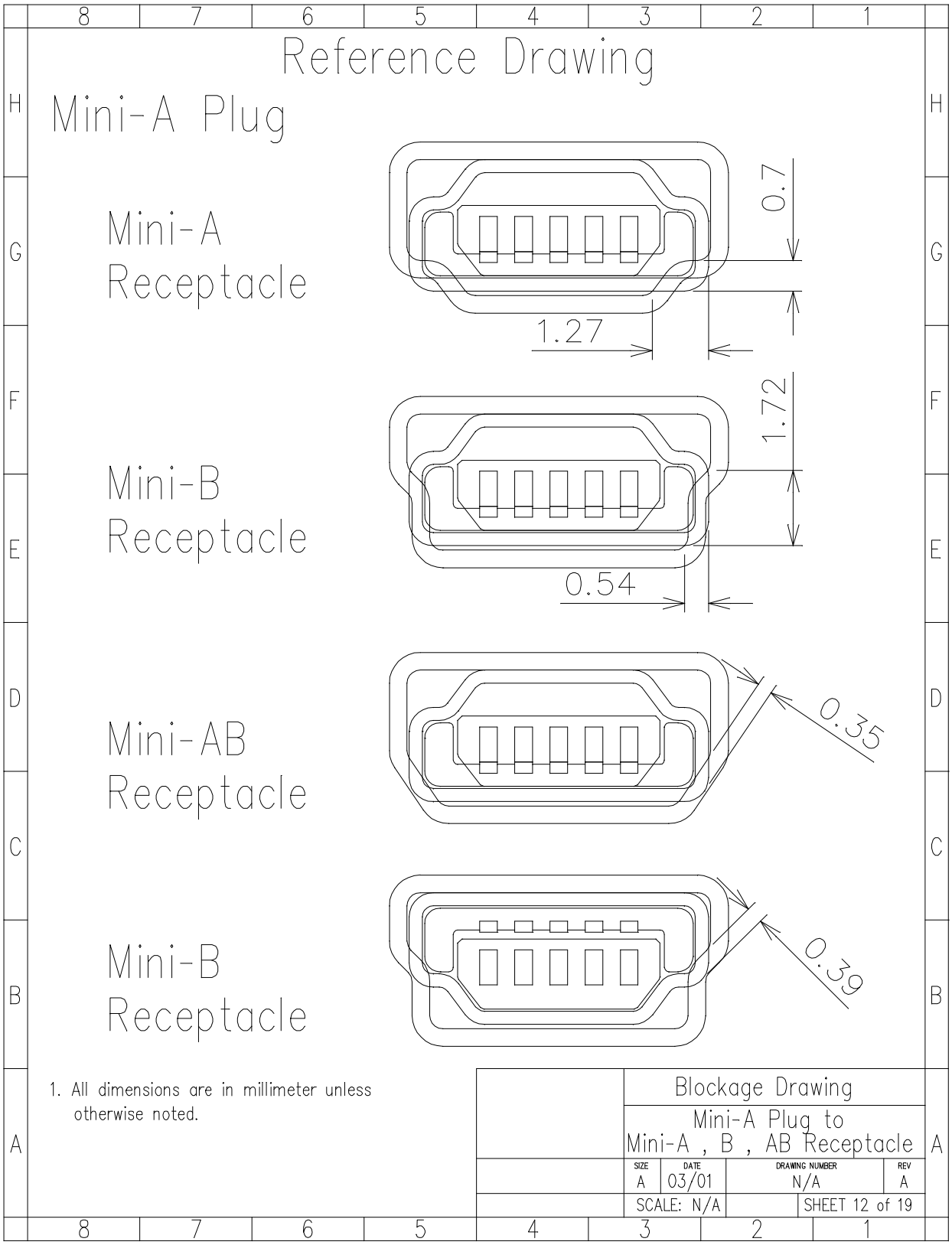

Figure 4-12 Mini-A Plug Blockage

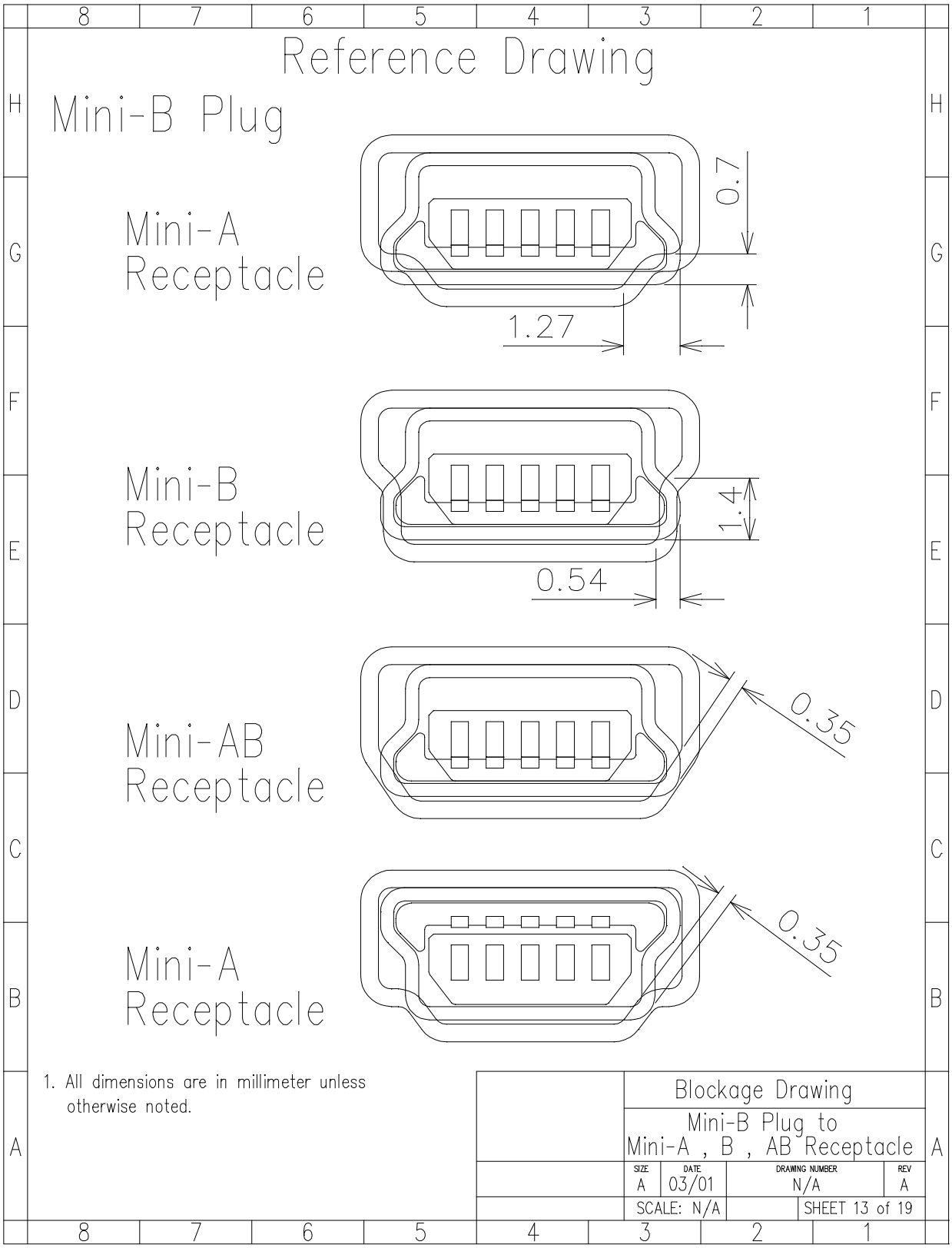

Figure 4-13 Mini-B Plug Blockage

DELL/HP/LENOVO EXHIBIT 1016
Page 34

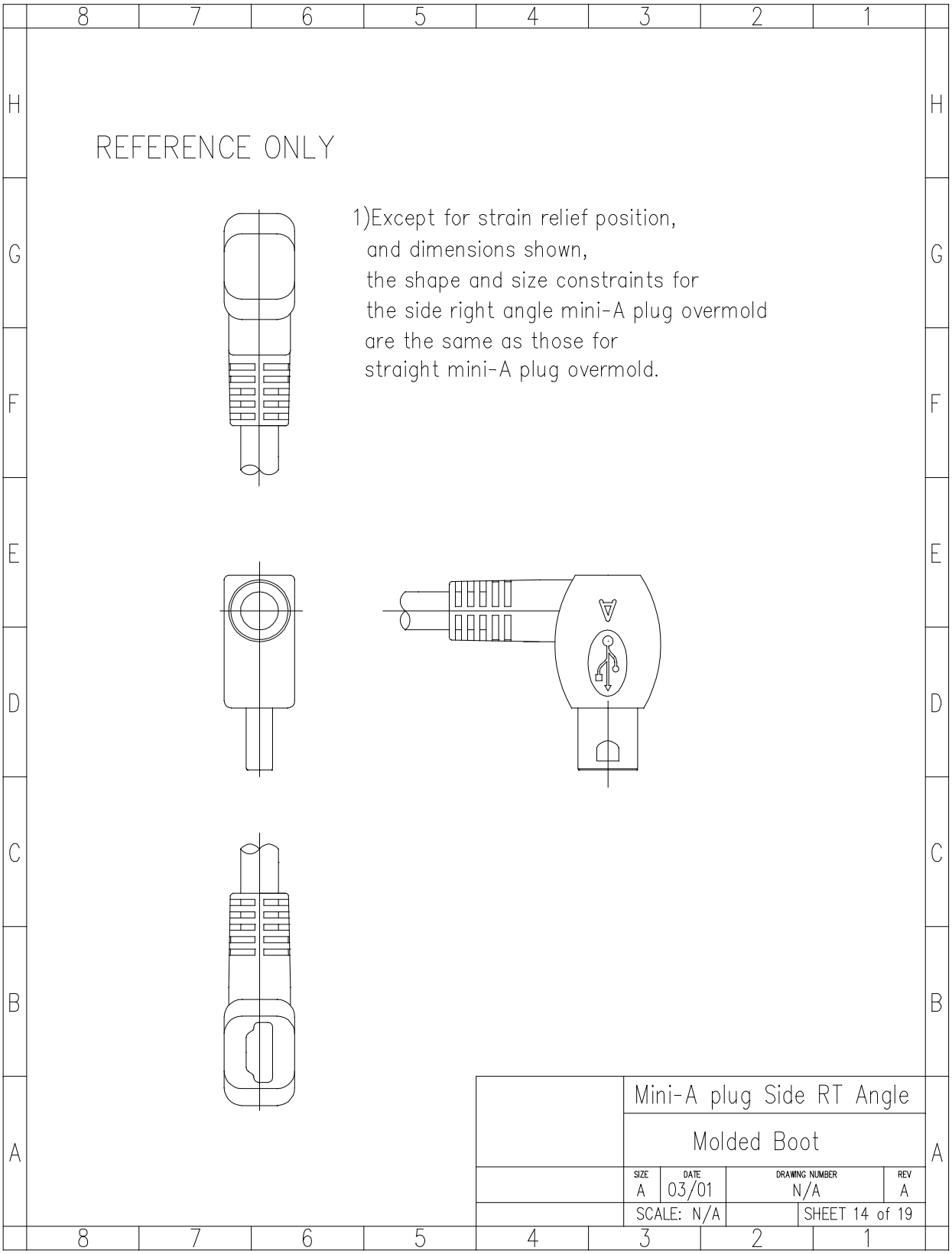

Figure 4-14 Mini-A Plug, Side Right Angle

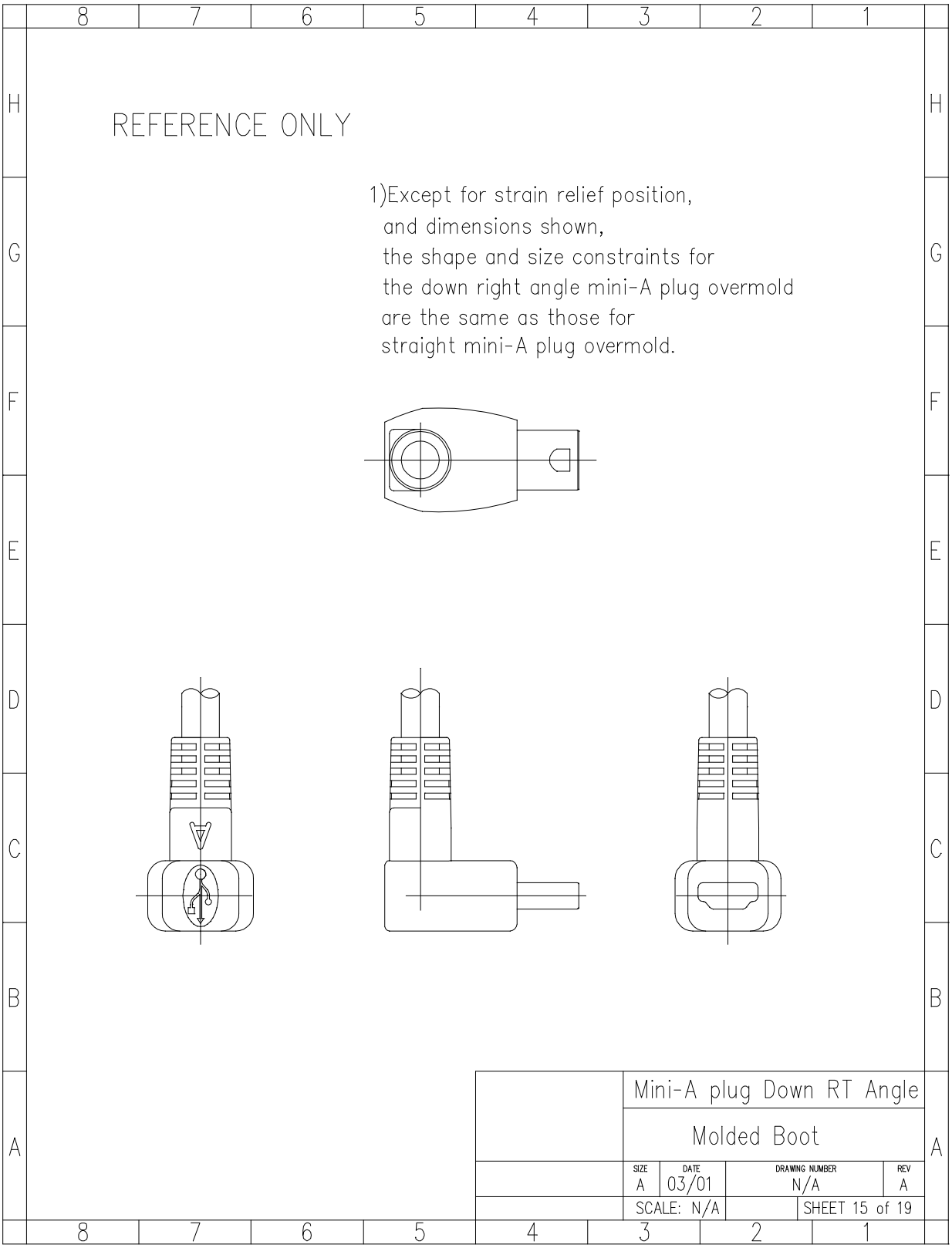

Figure 4-15 Mini-A Plug, Down Right Angle

DELL/HP/LENOVO EXHIBIT 1016
Page 36

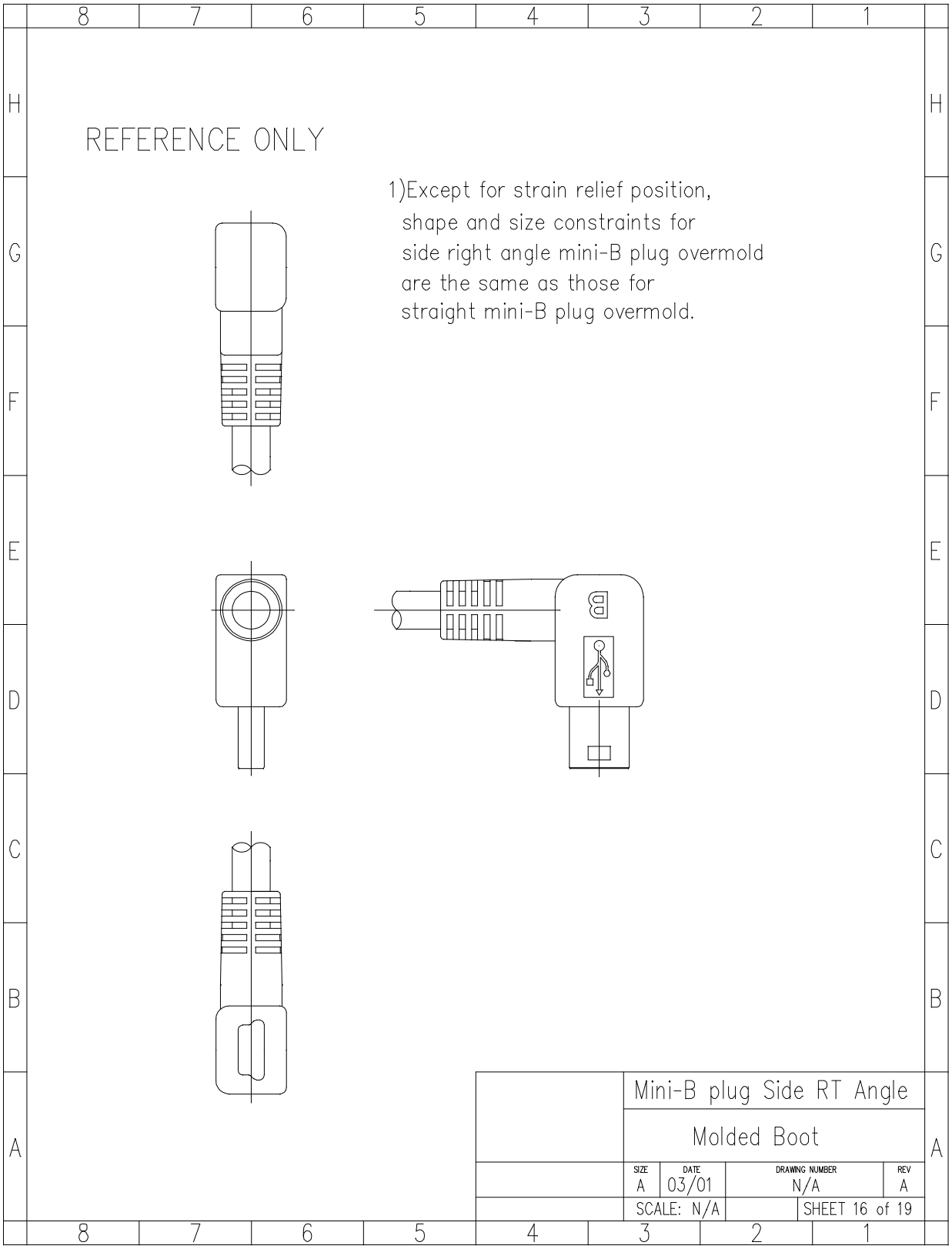

Figure 4-16 Mini-B Plug, Side Right Angle

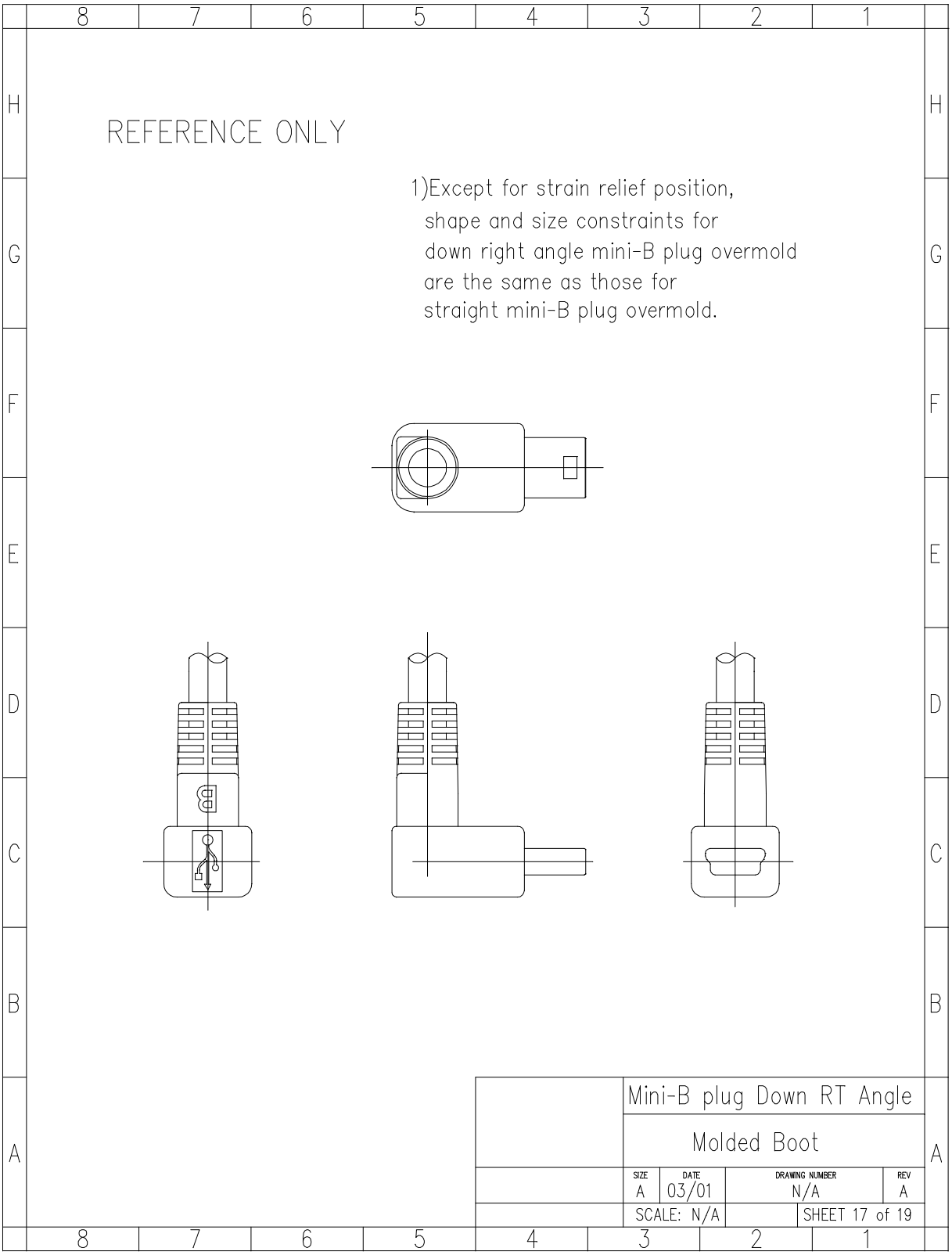

Figure 4-17 Mini-B Plug, Down Right Angle

DELL/HP/LENOVO EXHIBIT 1016
Page 38

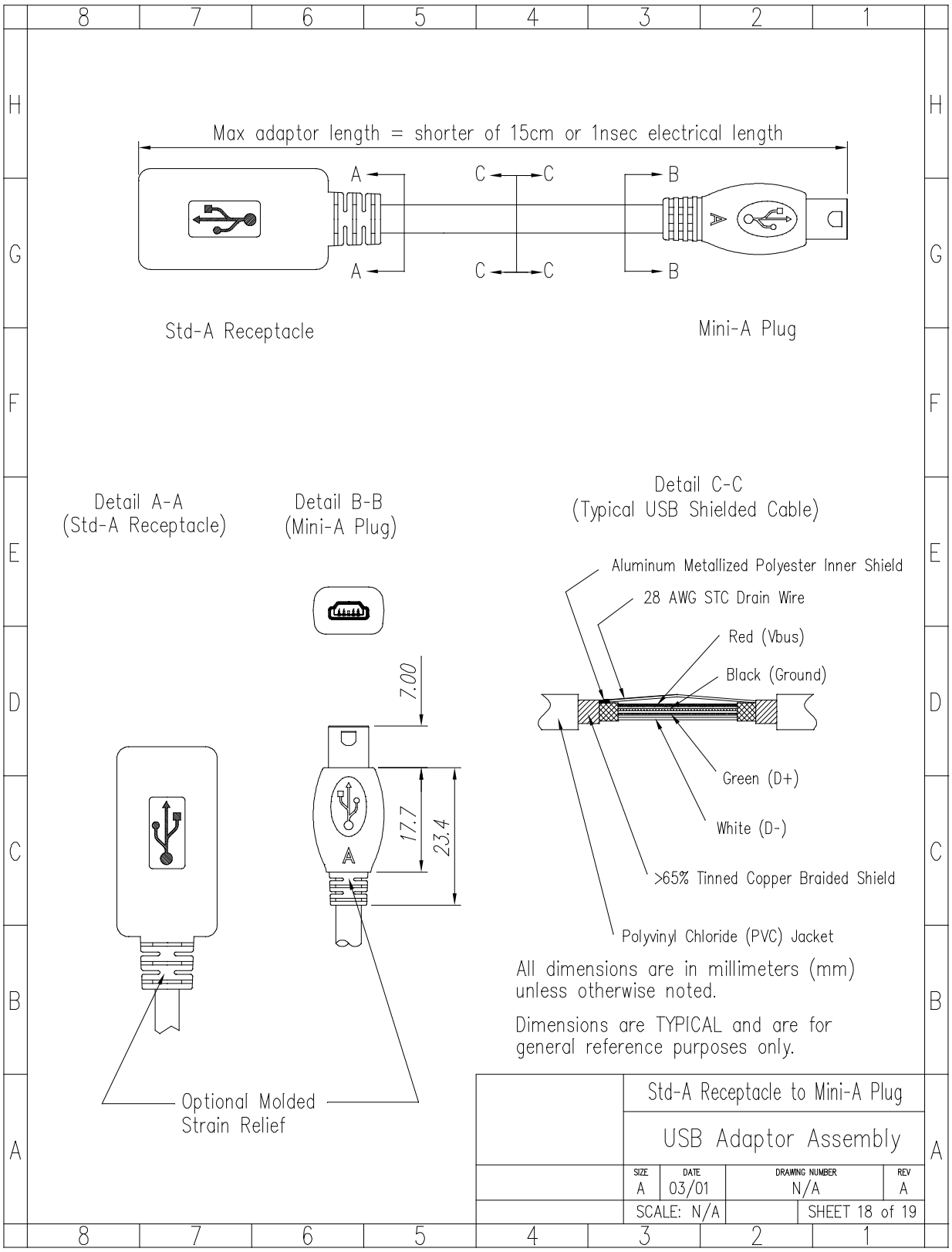

Figure 4-18 Adapter, Standard-A receptacle to Mini-A plug

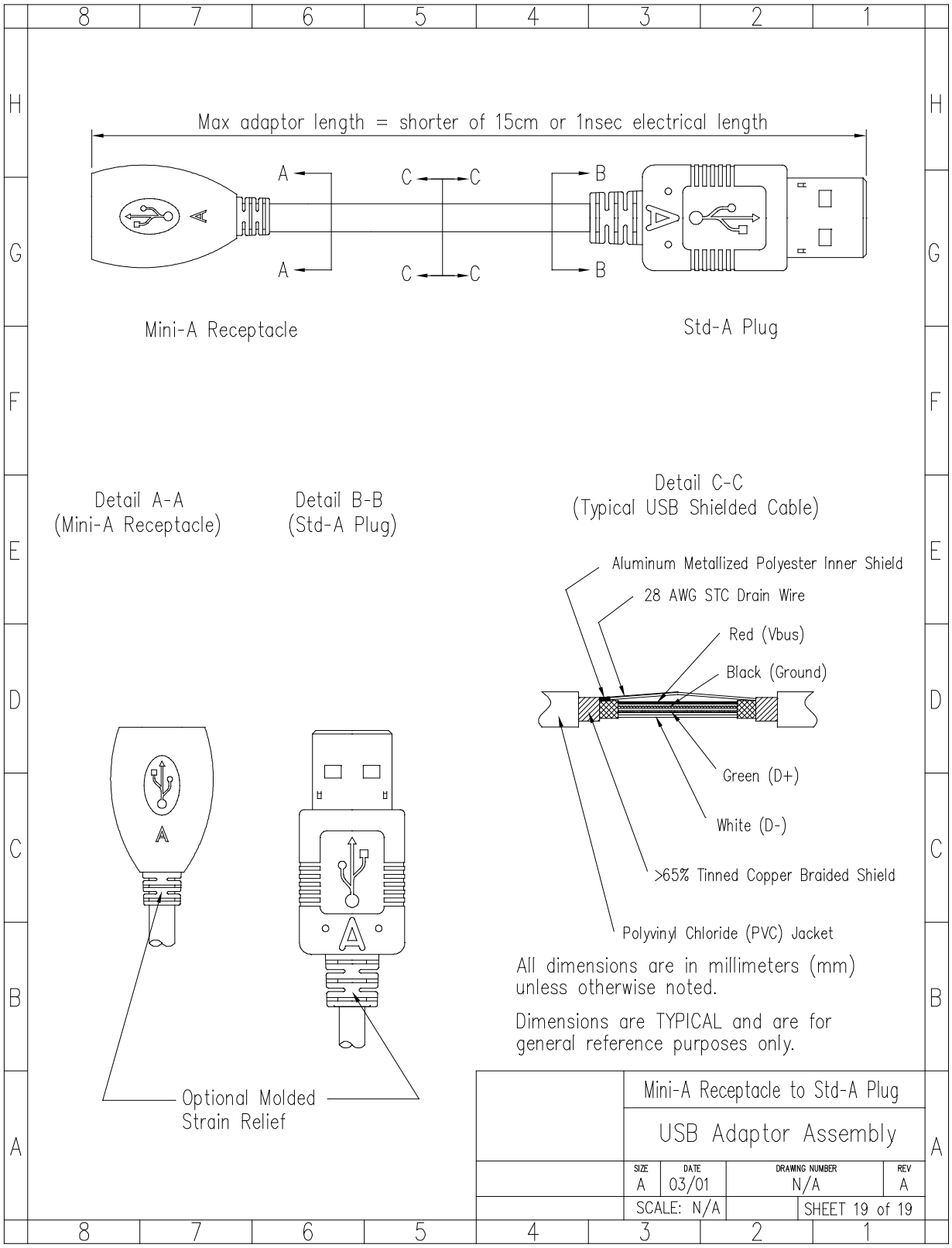

Figure 4-19 Adapter, Mini-A receptacle to Standard-A plug

DELL/HP/LENOVO EXHIBIT 1016
Page 40

5. Electrical Requirements

This section defines electrical specifications for USB devices that implement the protocols defined in this specification. Any parameter that is not specified in this section is unchanged from the USB 2.0 specification.

5.1 A-Device Electrical Requirements

5.1.1 V_{BUS} Output Voltage and Current

When an A-device is providing power to V_{BUS} on a port, it is required to maintain an output voltage ($V_{A_VBUS_OUT}$) on that port between 4.4 V and 5.25 V, under loads of 0 mA up to the rated per port output of the device's supply ($I_{A_VBUS_OUT}$ min = 8 mA) as long as the rated output of the A-device is less than or equal to 100 mA.

If the current rating per port of the A-device is greater than 100 mA, then the voltage regulation is required to be between 4.75 V and 5.25 V, and the A-device is required to meet the USB 2.0 specification requirements for power providers.

If the A-device is not capable of providing at least 100 mA on a port, it must be able to detect when V_{BUS} falls below the value necessary for proper operation of a B-device ($V_{A_VBUS_VLD}$ min). Any voltage below $V_{A_VBUS_VLD}$ min shall be detected as a low-voltage condition.

5.1.2 V_{BUS} Input Impedance

When the A-device is powered and not providing V_{BUS}, it shall present an input impedance on V_{BUS} of no more than 100 kΩ ($R_{A_BUS_IN}$ max) to GND over the range of 0 V ≤ V_{BUS} ≤ 5.25 V, as shown in Figure 5-1. If the A-device responds to the V_{BUS} pulsing method of SRP, then the input impedance may be no lower than 40 kΩ ($R_{A_BUS_IN}$ min) to GND. Otherwise, it may be lower.

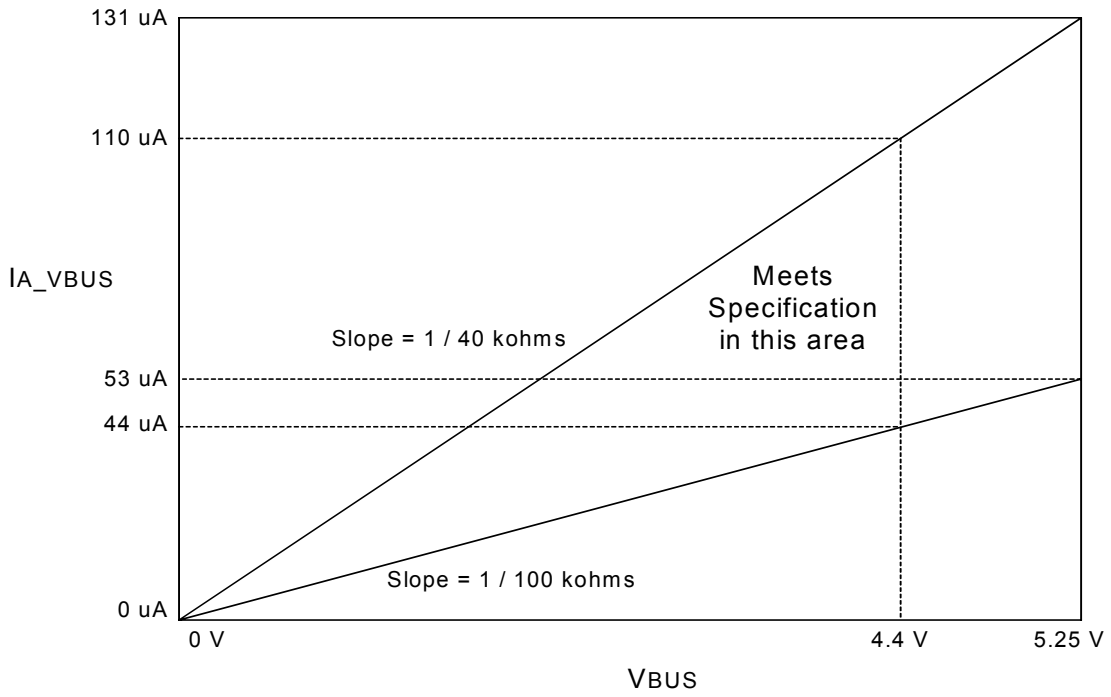

Figure 5-1 A-device Input Impedance (VBUS not driven)

DELL/HP/LENOVO EXHIBIT 1016
Page 41

5.1.3 V_{BUS} Rise and Fall Time

When the A-device provides power, the rise time on V_{BUS} from 0 V to 4.4 V shall be less than 100 ms ($T_{A_VBUS_RISE}$ max) when driving a constant current load equal to the rating of the device's V_{BUS} supply and an external load capacitance of 10 µF (this 10 µF is in addition to any V_{BUS} decoupling capacitance on the A-device). If V_{BUS} does not reach this voltage within $T_{A_VBUS_RISE}$ max from the time that V_{BUS} is turned on, this is an indication that the B-device is drawing more current that the A-device is capable of providing and an over-current condition exists. In such a case, the A-device shall turn off V_{BUS} and terminate the session. The A-device shall also indicate to the user that the B-device is not supported.

> Note: V_{BUS} rise time is not specified in USB 2.0 and standard USB hosts **may** have rise times longer than 100 ms. A compliant device shall be able to operate with the longer V_{BUS} rise times allowed by the USB 2.0 specification.

The fall time of V_{BUS} is derived and not specified. It is only significant when the B-device initiates and the A-device responds to SRP. Before starting SRP, the B-device must insure that V_{BUS} is below 0.8 V. The B-device may either actively pull down V_{BUS} through a resistance of no less than $R_{B_SRP_DWN}$ min (see Section 5.3.2), or it may wait for the decoupling capacitance of the A-device and B-device to discharge through the weak pull-downs that are present on V_{BUS}.

For an A-device, the highest pull-down resistance on V_{BUS} is 100 kΩ ($R_{A_BUS_IN}$ max) and the decoupling capacitance is less than 6.5 µF (C_{DRD_VBUS} max). The values of the decoupling capacitor and the V_{BUS} pull-down resistor on the B-device are known by the manufacturer of the B-device. These values are used with the worst-case values of the A-device in computing the discharge time for V_{BUS}. If the worst-case values on the B-device are the same as for the A-device, then the longest discharge time from 4.4 V ($V_{A_VBUS_VLD}$ min) to 0.8 V ($V_{A_SESS_VLD}$ min) will be approximately 1.1 seconds.

5.1.4 V_{BUS} Capacitance

A dual-role device must have a V_{BUS} capacitance (C_{DRD_VBUS}) that is between 1.0 µF and 6.5 µF.

The limit on the decoupling capacitance allows a B-device to differentiate between a powered down dual-role device and a powered down standard host, i.e.:

- Capacitance on A-Device — $1.0\ \mu F < C_{DRD_VBUS} < 6.5\ \mu F$
- Capacitance on Host — $C_{HST_VBUS} > 96\ \mu F$

5.1.5 V_{BUS} Leakage Voltage

When the A-device is not driving V_{BUS}, the voltage on V_{BUS} as a result of device leakage within the A-device ($V_{A_VBUS_LKG}$) shall not exceed 0.2 V. This voltage is measured with no device attached to the A-device and after V_{BUS} has been turned off for 5 seconds.

5.1.6 Data Line Pull-down Resistance

When an A-device is idle or acting as Host, it shall activate pull-down resistors on both the D+ and D- lines. These resistors shall be within the range of 14.25 kΩ to 24.8 kΩ (R_{PD}).

When an A-device is acting as a Peripheral, it shall disable the pull-down on the D+ line but shall not disable the pull-down on the D- line.

The A-device is allowed to disable both pull-down resistors during the interval of a packet transmission, when acting as either Host or Peripheral.

DELL/HP/LENOVO EXHIBIT 1016
Page 42

5.1.7 Data Line Pull-up Resistance

When operating as a Peripheral, the A-device shall enable a pull-up (as defined in the USB 2.0 specification) attached to the D+ line. It is allowed to disable the pull-up resistor during the interval of a packet transmission.

5.1.8 Data Line Leakage Voltage

When neither device is driving the data bus, one of the data lines will be held low by the pull-down resistor on the Host. The D- line is pulled low if the attached device is full speed and D+ line is pulled low if the attached device is low speed.

The low-level voltage on the line that is being pulled low may not be above 0.342 V ($V_{DRD_DATA_LKG}$ max). As per Section 7.1.6.6 of the USB 2.0 specification, the attached device may have an impedance as low as 300 kΩ (Z_{INP} min) to 3.6 V. When the data line of the attached device is grounded, this results in a leakage current of approximately 10 μA. The leakage current from the Host shall be low enough such that, when combined with the approximately 10 μA of leakage from the attached device, the voltage across the pull-down resistor shall not exceed 0.342 V. This voltage is measured by pulling either D+ or D- to 3.6 V through 300 kΩ (Z_{INP} min) when the A-device is the Host and the bus is in the idle state.

5.1.9 Data Line Discharge Time

When an A-device is in the **a_peripheral** state and detects that the bus is idle for greater than $T_{A_BIDL_ADIS}$, then it is allowed to:

- disconnect its pull up
- allow time for the data line to discharge
- check if the B-device has connected its pull up

Similarily, when a B-device is in the **b_peripheral** state and detects that the bus is idle for greater than $T_{B_AIDL_BDIS}$, then it is allowed to:

- disconnect its pull up
- allow time for the data line to discharge
- check if the A-device has connected its pull up

During the above steps, the amount of time that the local device must wait for the data line to discharge, before checking to see if the remote device has connected its pull up, is determined as follows.

As per Table 7-7 of the USB 2.0 specification, the maximum capacitance for a downstream facing port is 150 pF (C_{IND} max), and the maximum capacitance for the upstream port of a device without an attached cable is 100 pF (C_{INUB} max). The differential capacitance of a worst-case USB cable is approximately 340 pF (the single-ended capacitance is lower but is not specified so assuming that the single-ended capacitance is the same as the differential capacitance will insure a worst case calculation). The pull-down resistance of each dual-role device is 24.8 kΩ (R_{PD} max) or less. This results in a discharge time constant of:

- time constant = (150 pF + 100 pF + 340 pF) x (24.8 kΩ / 2) ≈ 6.7 μsec

For the data line to discharge from 3.6 V to 0.8 V requires approximately 1.55 time constants. This gives a worst case delay for the data line discharge of about 10.4 μs. In previous cases of USB specification development, time values for RC charge/discharge were used to set timing values. In most cases, these values did not have a large margin for error or to allow for simple variations in implementation to reduce costs or complexity. For this reason, the guard-band for the data-line discharge is set at about 2.5 times

the calculated value. Thus, if a device uses this method to ensure the data line is at a logic low level, it must wait for a minimum of T_{LDIS_DSCHG} min before checking the state of the data-line.

5.1.10 V_{BUS} Input Current Without Battery

In many cases, dual-role devices will be powered by a battery. When a dual-role device has a dead battery that is not capable of powering up the device, or if the battery has been removed, then a dual-role device is allowed to act as a peripheral in accordance with the USB 2.0 specification. See Figure 7-29 and section 7.1.7.6 of the USB 2.0 specification for rules on current draw.

5.2 B-Device Electrical Requirements

5.2.1 V_{BUS} Average Input Current

An unconfigured, dual-role B-device shall not draw more than $I_{B_DRD_UNCFG}$ max average current from V_{BUS}, except for a short interval immediately before initiating SRP.

An unconfigured, SRP capable, peripheral-only B-device shall not draw more than $I_{B_PO_UNCFG}$ max average current from V_{BUS}.

Average current as used above is defined as the average current over any 1 ms interval.

Before initiating SRP, either a dual-role or an SRP capable peripheral-only B-device is allowed to discharge V_{BUS} for a time period of not more than 100 ms, at a current of not more than $I_{B_DSCHG_IN}$ max.

5.2.2 V_{BUS} Peak Input Current

The peak current drawn by an SRP capable B-device shall not be so large as to cause more than a $V_{B_DELTA_PK}$ drop in V_{BUS} from its average value. The allowable transient is computed by assuming that the A-device is a constant current source providing the average current consumed by the B-device in parallel with a C_{DRD_VBUS} min capacitor.

The 1 µF decoupling capacitor on the A-device and the decoupling capacitor provided on he B-device will provide the only filtering of the voltage transient due to the transient current. If the transient current computed by this method is greater than 100 mA, then the transient shall be no larger than the larger of 100 mA or the value reported in *bMaxPower* in the currently selected configuration. No transient shall have a di/dt of greater than 100 mA/µs. (For reference, see Figure 7-48 of USB 2.0 specification.)

The peak current drawn by an SRP capable B-device shall not cause it to exceed the average current requirement as defined in Section 5.2.1.

5.2.3 V_{BUS} Capacitance

The V_{BUS} capacitance allowed for a dual-role B-device is the same as that allowed for an A-device, (see Section 5.1.4).

5.2.4 Data Line Pull-down Resistance

When a dual-role B-device is idle or acting as a Host, it shall activate pull-down resistors on both the D+ and D- lines. These resistors shall be within the range of 14.25 kΩ to 24.80 kΩ (R_{PD}).

When a dual-role B-device is acting as a Peripheral, it shall disable the pull-down on the D+ line but shall not disable the pull-down on the D- line.

DELL/HP/LENOVO EXHIBIT 1016
Page 44

A dual-role B-device is allowed to disable both pull-down resistors during the interval of a packet transmission while acting as either a Host or a Peripheral.

5.2.5 Data Line Pull-up Resistance

When operating as Peripheral, the B-device shall enable a pull-up (as defined in the USB 2.0 specification) attached to the D+ pin. It is allowed that the pull-up resistor be disabled during the interval of a packet transmission.

5.2.6 Data Line Leakage Voltage

For a dual-role B-device, the data line leakage voltage shall be as specified in Section 5.1.8 for an A-device.

5.2.7 V_{BUS} Input Current Without Battery

If an SRP capable peripheral has a dead battery, or the battery has been removed, then it is allowed to act as a peripheral in accordance with the USB 2.0 specification, and as described in Section 5.1.3.

5.3 Session Request Protocol

5.3.1 Introduction

In order to conserve power, the OTG supplement allows an A-device to leave V_{BUS} turned off when the bus is not being used. If the B-device wants to use the bus when V_{BUS} is turned off, then it requires some way of requesting the A-device to supply power on V_{BUS}. For this reason, the OTG supplement defines the Session Request Protocol (SRP).

A session is defined as the period of time that V_{BUS} is above the Session Valid threshold of a given device. This A-device threshold shall be within the range defined by $V_{A_SESS_VLD}$, while the B-device threshold shall be in the range defined by $V_{B_SESS_VLD}$, (see Table 5-1). At the start of a session, the A-device defaults to having the role of Host. During a session, the role of Host can be transferred back and forth between the A-device and the B-device any number of times, using the Host Negotiation Protocol (HNP) defined in Section 6. The session ends when V_{BUS} falls below the A-device Session Valid threshold.

Dual-role devices are required to be able to initiate and respond to SRP. Any A-device, including a PC or laptop, is allowed to respond to SRP. Any B-device, including a standard USB peripheral, is allowed to initiate SRP.

The OTG supplement defines two methods that are used by the B-device to request that the A-device begin a session. They are called “data-line pulsing” and “V_{BUS} pulsing”. These two methods comprise the Session Request Protocol (SRP).

Two signaling methods are defined to allow maximum latitude in the design of A-devices. An A-device is only required to respond to one of the two SRP signaling methods. A B-device shall use both methods when initiating SRP to insure that the A-device responds.

5.3.2 Initial Conditions

The B-device may not attempt to start a new session until it has determined that the A-device should have detected the end of the previous session. The A-device detects the end of a session by sensing that V_{BUS} has dropped below its session valid threshold. Since the A-device Session Valid threshold may be as low as $V_{A_SESS_VLD}$ min, the B-device must insure that V_{BUS} is below this level before

DELL/HP/LENOVO EXHIBIT 1016
Page 45

requesting a new session. The B-device may ensure that V_{BUS} is below the B-device Session End threshold either by direct measurement of V_{BUS} or by timing the discharge.

Additionally, the B-device may switch in a pull-down resistor from V_{BUS} to ground in order to speed the discharge process as long as the pull-down resistor does not cause the B-device to draw more than 8 mA from V_{BUS}. To ensure this, the resistance of the pull-down ($R_{B_SRP_DWN}$) must be greater than 656 Ω, (5.25 V / 8 mA = 656 Ω).

A second initial condition for starting a new session is that the B-device must detect that both the D+ and D- data lines must have been low (SE0) for at least $T_{B_SE0_SRP}$ min. This ensures that the A-device has detected a disconnect condition from the device.

These initial conditions define the period after which the A-device will properly recognize SRP from the B-device.

Each B-device is required to have a Session End threshold that is within the Session End range ($V_{B_SESS_END}$) defined in Table 5-1. This threshold can be implemented directly, as with a comparator, or it can be implemented indirectly, by timing a discharge of V_{BUS} through a resistor. The reason that Table 5-1 lists a lower limit of 0.2V on this threshold is that leakage currents from the transceivers could prevent a non-driven V_{BUS} from discharging below this lower voltage.

When the B-device detects that V_{BUS} has gone below its Session End threshold and detects that both D+ and D- have been low (SE0) for at least $T_{B_SE0_SRP}$ min, then any previous session on the A-device is over and a new session may start.

5.3.3 Data-line Pulsing

To indicate a request for a new session using the data-line pulsing SRP, the B-device waits until the initial conditions are met as described above and then turns on its data line pull-up resistor (either D+ or D-) for a period of $T_{B_DATA_PLS}$ min to $T_{B_DATA_PLS\ max}$. A dual-role B-device is only allowed to initiate SRP at full-speed, and thus shall only pull up D+. The duration of such a data line pulse is sufficient to allow the A-device to reject spurious voltage transients on the data lines.

An A-device that is designed to detect the data-line pulsing of SRP shall generate an SRP indication if either D+ goes high or D- goes high.

Note: It has been observed that some self-powered USB devices do not follow USB Revision 1.1 Section 7.1.5 or USB Revision 2.0 Section 7.1.5.1 that state:

> "The voltage source on the pull-up resistor must be derived from or controlled by the power supplied on the USB cable such that when V_{BUS} is removed, the pull-up resistor does not supply current on the data line to which it is attached."

Devices that violate the above requirement have been observed to pull-up D+ or D- as long as they have power applied to them, without regard to the presence of V_{BUS}. For this reason, a dual-role device that responds to data-line pulsing SRP should be able to disable this capability when an offending device is attached. The process for handling this would be to start a session upon detecting D+/D- high, enumerate the device, determine that it is not supported, disable SRP, and turn off V_{BUS}. When the data line returns low (indicating a disconnect), then SRP should be re-enabled.

DELL/HP/LENOVO EXHIBIT 1016
Page 46

5.3.4 VBUS Pulsing

To indicate a request for a new session using the VBUS pulsing method, the B-device waits until the initial conditions are met as described in Section 5.3.2 and then drives VBUS. VBUS is driven for a period that is long enough for a capacitance on VBUS that is smaller than 13 µF (2 x CDRD_VBUS max) to be charged to VB_DRD_OUT min while a capacitance on VBUS of more than 97 µF (CHST_VBUS min + CDRD_VBUS min) will not be charged above 2.0 V (VB_HST_OUT max).

There are two scenarios that a B-device could encounter when pulsing VBUS to initiate SRP. In one scenario, the B-device is connected to an A-device that responds to the VBUS pulsing SRP. In this case, the B-device can drive VBUS above the A-device Session Valid threshold in order to wake up the A-device. (This assumes that the A-device is not already driving VBUS, in which case a session is already in progress). When driving such an A-device, the B-device shall ensure that VBUS goes above 2.1 V (VB_DRD_OUT min), but does not exceed 5.25 V (VB_DRD_OUT max).

In the second scenario, the B-device is attached to a standard host. In this case, the B-device shall not drive VBUS above 2.0V (VB_HST_OUT max). This insures that no damage is done to standard hosts that are not designed to withstand a voltage externally applied to VBUS.

In order to meet these requirements, the B-device can utilize the fact that the capacitance on a standard host will not be less than 96 µF (CHST_VBUS min), while the maximum capacitance allowed on a dual-role device is 6.5 µF (CDRD_VBUS max). Based on the greater than one order-of-magnitude difference between these two capacitances, and a self-imposed current limit, the B-device designer can derive a maximum length of time the B-device is allowed to drive VBUS. By driving VBUS for this duration, the designer can guarantee that VBUS will rise above 2.1 V if attached to a dual-role device, while ensuring that VBUS will not exceed 2.0 V if attached to a standard USB host.

5.3.5 B-Device VBUS Pulsing Current

The B-device VBUS pulsing circuitry must be designed such that the maximum current drawn by the B-device does not exceed 8 mA (IB_SO_UNCFG max). One way to ensure this restriction is met is to drive VBUS with a voltage source greater than 3.0 V and with an output impedance greater than 281 Ω (RB_SRP_UP min). This takes into consideration the possibility that if the A-Device responds very quickly to SRP, it could drive VBUS to 5.25 V while the B-device is still pulsing VBUS. If this happened, then current could flow from the 5.25 V on the A-device back to the 3.0 V on the B-device. ([5.25 V – 3.0 V]/8 mA ≅ 281 Ω)

5.3.6 A-Device Session Valid

The A-device continuously monitors VBUS as long as power is available on the A-device. An A-device that is designed to detect the VBUS pulsing method will detect that VBUS has gone above the A-device Session Valid threshold (VA_SESS_VLD) and generate an indication that SRP has been detected.

5.3.7 B-Device Session Valid

When a B-device detects that the voltage on VBUS is greater than the B-Device Session Valid threshold (VB_SESS_VLD), then the B-device shall consider a session to be in progress. After the VBUS voltage crosses this threshold, the B-device shall assert either the D+ or D- data-line within 1 second (TB_SVLD_BCON max).

5.3.8 Duration of SRP

The maximum time allowed for the B-device to complete all of its SRP initiation activities is 100 ms (TB_SRP_INIT max). The SRP activities include all those activities that transpire while the B-device is not monitoring the state of VBUS. The B-device shall not monitor VBUS when doing VBUS pulsing but it may continue to monitor VBUS during the period of time when it is pulling VBUS down and during data-line

DELL/HP/LENOVO EXHIBIT 1016
Page 47

pulsing. If V_{BUS} is monitored during these periods, then the time taken for them is not counted in the 100 ms limit for SRP activities.

5.3.9 Order of Methods

The B-device shall first perform data-line pulsing, followed by V_{BUS} pulsing.

5.3.10 Response Time of A-device

The A-device may be designed to respond to either of the methods of SRP. After initiating SRP, the B-device is required to wait at least 5 seconds ($T_{B_SRP_FAIL}$ min) for the A-device to respond, before informing the user that the communication attempt has failed. For this reason, it is recommended that the A-device respond to SRP in less than 5 seconds ($T_{A_SRP_RSPNS}$ max). The minimum response from the A-device is to turn on V_{BUS} and generate a bus reset.

5.3.11 Repetition of SRP

The B-device may initiate the SRP any time the initial conditions of Section 5.3.2 are met.

DELL/HP/LENOVO EXHIBIT 1016
Page 48

5.4 Electrical Characteristics

Table 5-1. DC Electrical Characteristics

Parameter	Symbol	Conditions	Min	Max	Units	Ref
V_{BUS} Voltage:						
A-Device Output Voltage	$V_{A_VBUS_OUT}$	$0 \le I_{VBUS} \le I_{A_VBUS_OUT} <$ 100 mA	4.4	5.25	V	5.1.1
V_{BUS} Rise Time	$T_{A_VBUS_RISE}$	C_{LOAD} = 10 μF I_{VBUS} = rated load[1] 0.0 V < V_{BUS} < 4.4 V		100	ms	5.1.3
A-device Leakage Voltage	$V_{A_VBUS_LKG}$			0.2	V	5.1.5
B-device (SRP capable) to Dual-Role Device Output Voltage	$V_{B_DRD_OUT}$		2.1	5.25	V	5.3.4
B-device (SRP capable) to Host Output Voltage	$V_{B_HST_OUT}$			2.0	V	5.3.4
B-device (SRP capable) Induced Transient	$V_{B_DELTA_PK}$	di/dt < 100 mA/μs		400	mV	5.2.2
V_{BUS} Current:						
A-Device Output Current	$I_{A_VBUS_OUT}$	4.4 V ≤ V_{BUS} ≤ 5.25 V	8		mA	5.1.1
B-Device (Dual-Role) Unconfigured Average Current	$I_{B_DRD_UNCFG}$	0 V ≤ V_{BUS} ≤ 5.25 V T_{AVG} = 1 ms		150	μA	5.2.1
B-Device (SRP capable, Peripheral-Only) Unconfigured Average Current	$I_{B_PO_UNCFG}$	0V ≤ V_{BUS} ≤ 5.25 V T_{AVG} = 1 ms		8	mA	5.2.1
B-Device (SRP capable) Discharge Current	$I_{B_DSCHG_IN}$	0 V ≤ V_{BUS} ≤ 5.25 V		8	mA	5.2.1
Data-Line Voltage:						
Dual-Role Device Leakage	$V_{DRD_DATA_LKG}$			.342	V	5.1.8
ID Resistance:						
Resistance to ground on Mini-B plug	$R_{B_PLUG_ID}$		100K		Ω	4.2
Resistance to ground on Mini-A plug	$R_{A_PLUG_ID}$			10	Ω	4.2

[1] Each implementation must be capable of supplying a minimum of 8mA of V_{BUS}. An implementation that is designed to provide more than 8 mA shall be able to meet the rise-time requirement for V_{BUS} when the applied load is equal to the design limit of the supply.

DELL/HP/LENOVO EXHIBIT 1016
Page 49

Table 5-1. DC Electrical Characteristics (continued)

Parameter	Symbol	Conditions	Min	Max	Units	Ref
Terminations:						
A-device Data Line Pull-down	R_{PD}		14.25	24.8	kΩ	5.1.6
B-device Data Line Pull-down	R_{PD}		14.25	24.8	kΩ	5.2.4
A-Device V_{BUS} Input Impedance to GND	$R_{A_BUS_IN}$	SRP capable A-device, not driving V_{BUS}	40	100	kΩ	5.1.2
B-device V_{BUS} SRP pull-up	$R_{B_SRP_UP}$	Pull-up voltage = 3.0 V	281		Ω	5.3.5
B-device V_{BUS} SRP pull-down	$R_{B_SRP_DWN}$		656		Ω	5.3.2
Input Levels:						
A-device V_{BUS} Valid	$V_{A_VBUS_VLD}$		4.4		V	5.1.1
A-Device Session Valid	$V_{A_SESS_VLD}$		0.8	2.0	V	5.3.6
B-Device Session Valid	$V_{B_SESS_VLD}$		0.8	4.0	V	5.3.7
B-Device Session End	$V_{B_SESS_END}$		0.2	0.8	V	5.3.2
Decoupling Capacitance:						
Dual-role Device V_{BUS} Bypass Capacitance	C_{DRD_VBUS}		1	6.5	μF	5.1.4

DELL/HP/LENOVO EXHIBIT 1016
Page 50

5.5 Device Timings

Table 5-2lists the timing parameters of an A-device. The parameters are listed in roughly the order that they would occur during the following sequence of events.

- A-device responds to SRP and becomes Host
- A-device suspends the bus and B-device becomes Host
- B-device suspends the bus and A-device becomes Host

In case of a discrepancy between a parameter value as listed in the table below, and it's value as listed in other parts of the document, the table value shall take precedence.

The states listed in the table are described in Section 6.

Table 5-2. A-device Timing

Parameter	Num	Symbol	State	Min[1]	Max[1]	Units	Ref
SRP Response Time	1	TA_SRP_RSPNS	**a_idle**		30	sec	5.3.10
Wait for VBUS Rise	2	TA_WAIT_VRISE	**a_wait_vrise**		100[2]	ms	6.6.5.1
B-Connect Long Debounce	3	TA_BCON_LDB	**a_wait_bcon**	100		ms	6.6.1.12
B-connect to A-reset	3	TA_BCON_ARST	**a_wait_bcon**		30	sec	6.8.1.3
Wait for B-Connect	4	TA_WAIT_BCON	**a_wait_bcon**	1		sec	6.6.5.2
A-Idle to B-Disconnect	5	TA_AIDL_BDIS	**a_suspend**	200		ms	6.6.5.3
B-Disconnect to A-Connect	6	TA_BDIS_ACON	**a_suspend**		3	ms	6.3
B-Idle to A-Disconnect	7	TA_BIDL_ADIS	**a_peripheral**	3	200	ms	6.3
Local Disconnect to Data Line Discharge	8	TLDIS_DSCHG	**a_wait_bcon**	25		µs	5.1.9
B-Connect Short Debounce	9	TA_BCON_SDB	**a_wait_bcon**	2.5		µs	6.6.1.12
B-Connect Short Debounce Window	10	TA_BCON_SDB_WIN	**a_wait_bcon**		100	ms	6.6.1.12

[1] Time values are presumed to have precision and accuracy to within 2,500 ppm for FS capable devices and 500 ppm for HS capable devices.

[2] This value is vendor dependent. A compliant A-device will be capable of bringing VBUS in tolerance within no more than 100ms and waiting longer for VBUS rise is not advisable. If the vendor has designed the power supply to bring VBUS within tolerance in less than 100 ms, then it is appropriate to adjust this value downward to meet the capabilities of the implementation.

Table 5-3 lists the timing parameters of an A-device. The parameters are listed in roughly the order that they would occur during the following sequence of events.

- B-device initiates SRP and becomes Peripheral
- A-device suspends and B-device becomes Host
- B-device suspends and A-device becomes Host

In case of a discrepancy between a parameter value as listed in the table, and it's value as listed in other parts of the document, the table value shall take precedence.

Table 5-3. B-device Timing

Parameter	Num	Symbol	State	Min[1]	Max[1]	Units	Ref
SE0 Time Before SRP	11	$T_{B_SE0_SRP}$	**b_idle**	2		ms	5.3.2
Data-Line Pulse Time	12	$T_{B_DATA_PLS}$	**b_srp_init**	5	10	ms	5.3.3
SRP Initiate Time	13	$T_{B_SRP_INIT}$	**b_srp_init**		100	ms	5.3.8
SRP Fail Time	14	$T_{B_SRP_FAIL}$	**b_srp_init**	5	30	sec	6.8.2.2
Session Valid to B-Connect	15	$T_{B_SVLD_BCON}$	**b_idle**		1	sec	5.3.7
A-Idle to B-Disconnect	16	$T_{B_AIDL_BDIS}$	**b_peripheral**	5	150	ms	6.3
Time between B-device HS to FS transition during suspend, and B-device disconnect	17	$T_{B_FS_BDIS}$	**b_peripheral**	1	147	ms	6.3
Local Disconnect to Data Line Discharge	18	T_{LDISC_DSCHG}	**b_wait_acon**	25		µs	5.1.9
A-SE0 to B-Reset	19	$T_{B_ASE0_BRST}$	**b_wait_acon**	3.125	as per USB 2.0	ms	6.7.1
A-Connect Debounce	20	$T_{B_ACON_DBNC}$	**b_wait_acon**	2.5		µs	6.6.1.5
A-Connect to B-SE0	21	$T_{B_ACON_BSE0}$	**b_wait_acon**		1	ms	6.3

[1] Time values are presumed to have precision and accuracy to within 2,500 ppm for FS capable devices and 500 ppm for HS capable devices.

DELL/HP/LENOVO EXHIBIT 1016
Page 52

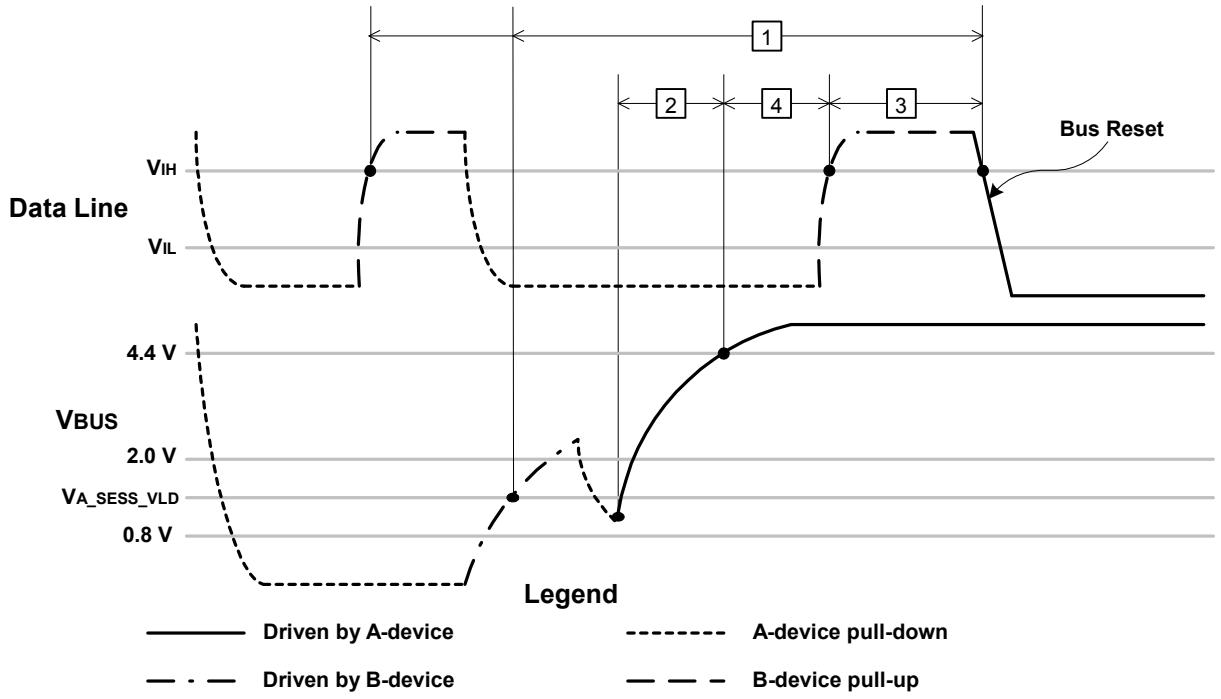

Figure 5-2 A-device SRP Timing Reference

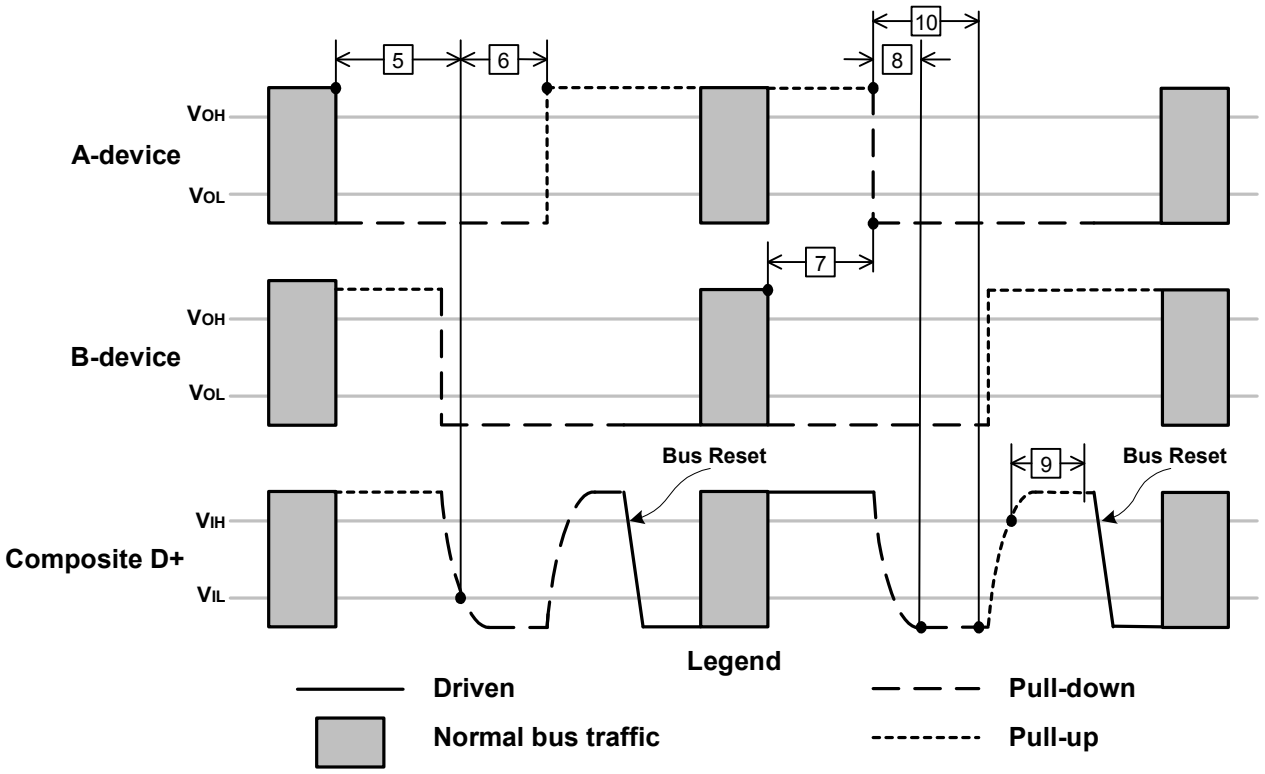

Figure 5-3 A-device HNP Timing Reference (FS)

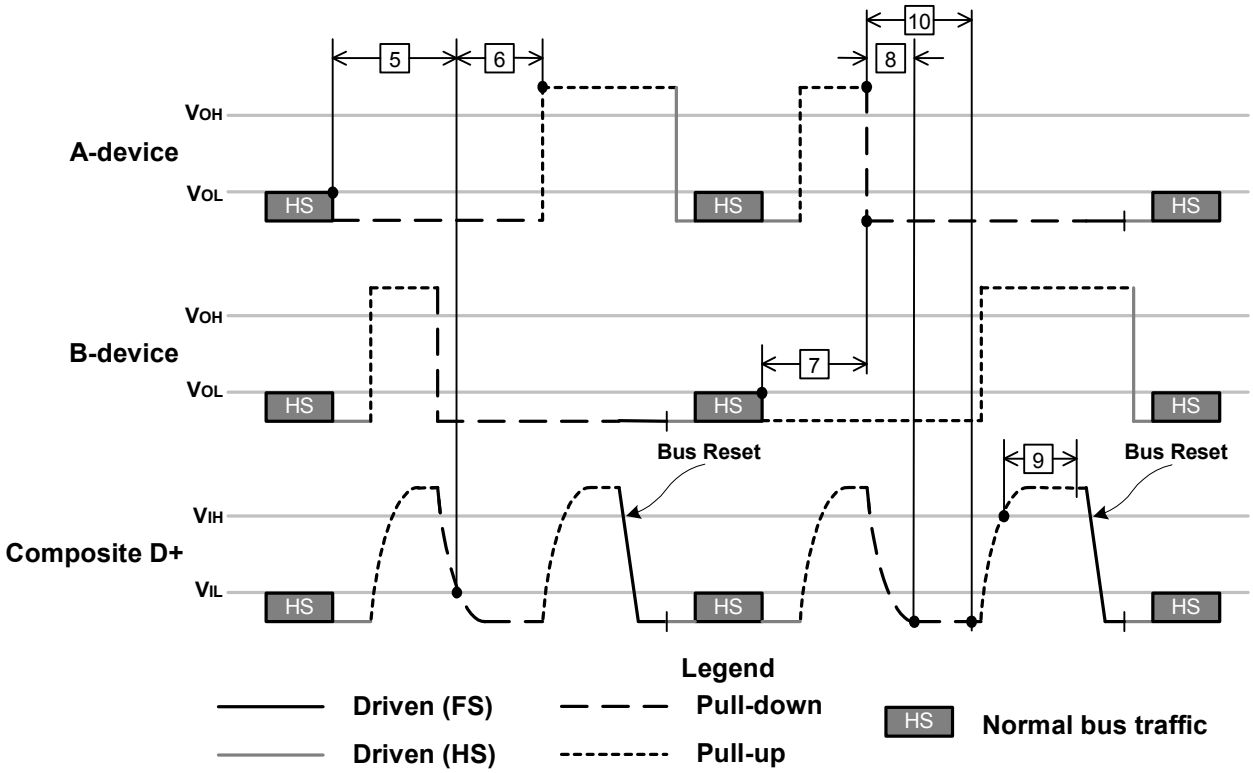

Figure 5-4 A-device HNP Timing Reference (HS)

At several points during SRP and HNP, one device is allowed a maximum length of time to respond to an event, while the other device is required to wait a minimum length of time for this response. Table 5-4 compares the maximum response time of one device to the minimum wait time of the other device.

In case of a discrepancy between Table 5-4 and the values in Table 5-2and Table 5-3, the values in Table 5-2and Table 5-3 take precedence.

DELL/HP/LENOVO EXHIBIT 1016
Page 54

Table 5-4. Device Timing Comparison

Device	Parameter	Symbol	State	Min[1]	Max[1]	Units
B-device	SRP Initiate Time	$T_{B_SRP_INIT}$	**b_srp_init**		100	ms
B-device	Session Valid Voltage to Local Connect	$T_{B_SVLD_BCON}$	**b_idle**		1	sec
A-device	Wait for B-Connect	$T_{A_WAIT_BCON}$	**a_wait_bcon**	1.2		sec
A-device	SRP Response Time	$T_{A_SRP_RSPNS}$	**a_idle**		30	sec
B-device	SRP Fail Time	$T_{B_SRP_FAIL}$	**b_idle**	5	30	sec
B-device	A-Idle to B-Disconnect	$T_{B_AIDL_BDIS}$	**b_peripheral**	5	150	ms
A-device	A-Idle to B-Disconnect	$T_{A_AIDL_BDIS}$	**a_suspend**	200		ms
A-device	B-Disconnect to A-Connect	$T_{A_BDIS_ACON}$	**a_suspend**		3	ms
B-device	A-SE0 to B-Reset	$T_{B_ASE0_BRST}$	**b_wait_acon**	3.125	as per USB 2.0	ms
B-device	A-Connect to B-SE0	$T_{B_ACON_BSE0}$	**b_wait_acon**		1	ms
A-device	B-Idle to A-Disconnect	$T_{A_BIDL_ADIS}$	**a_peripheral**	3	200	ms

[1] Time values are presumed to have precision and accuracy to within 2,500 ppm for FS capable devices and 500 ppm for HS capable devices.

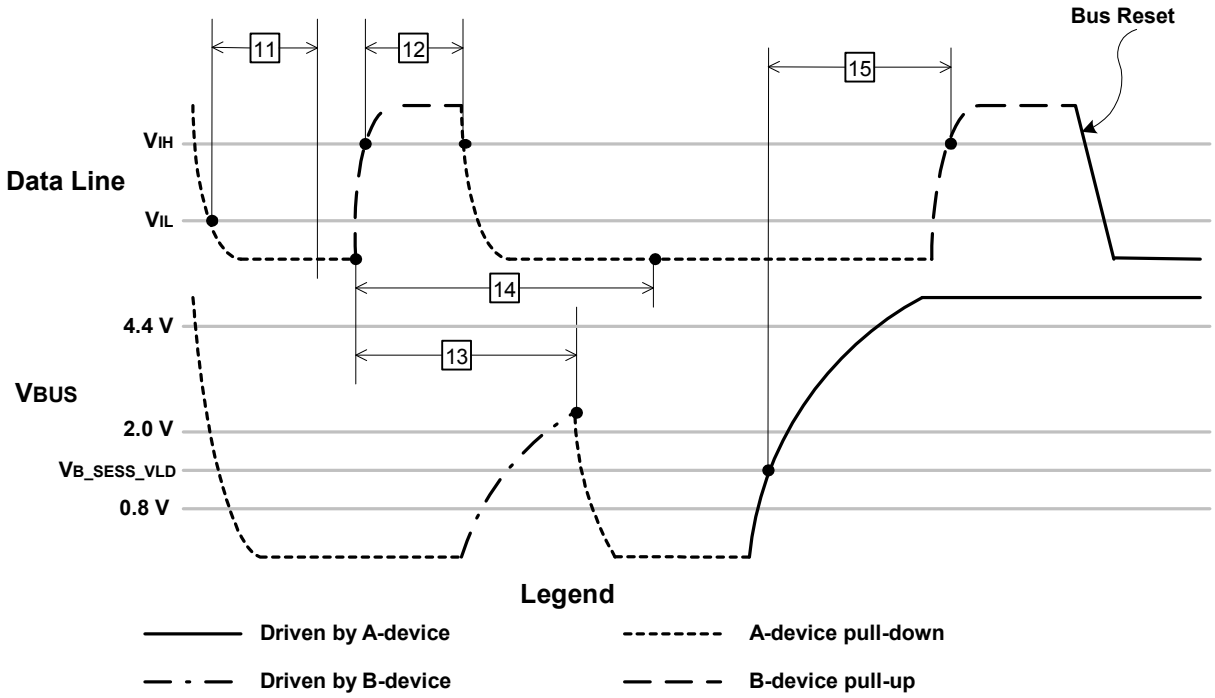

Figure 5-5 B-device SRP Timing Reference

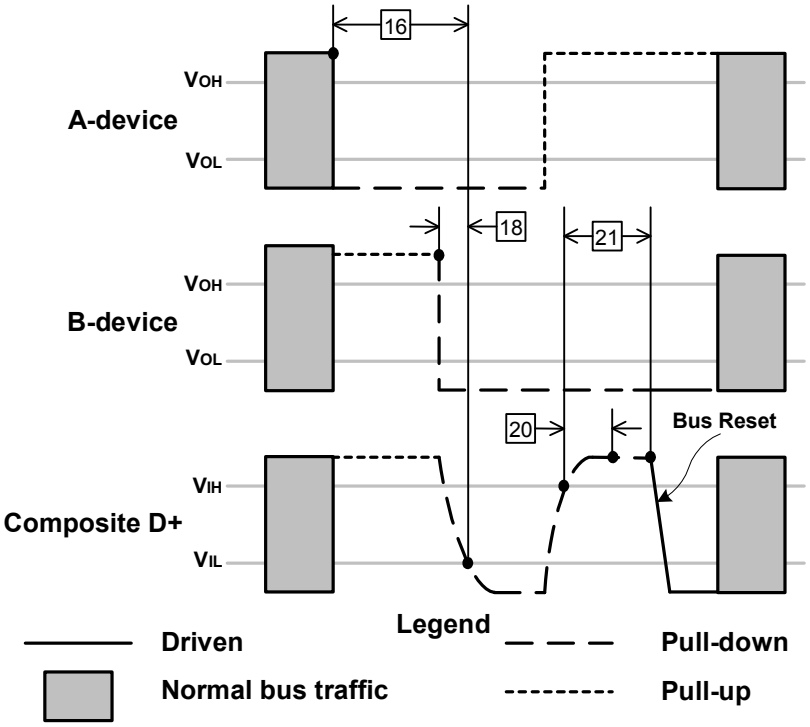

Figure 5-6 B-device HNP Timing Reference (FS)

DELL/HP/LENOVO EXHIBIT 1016
Page 56

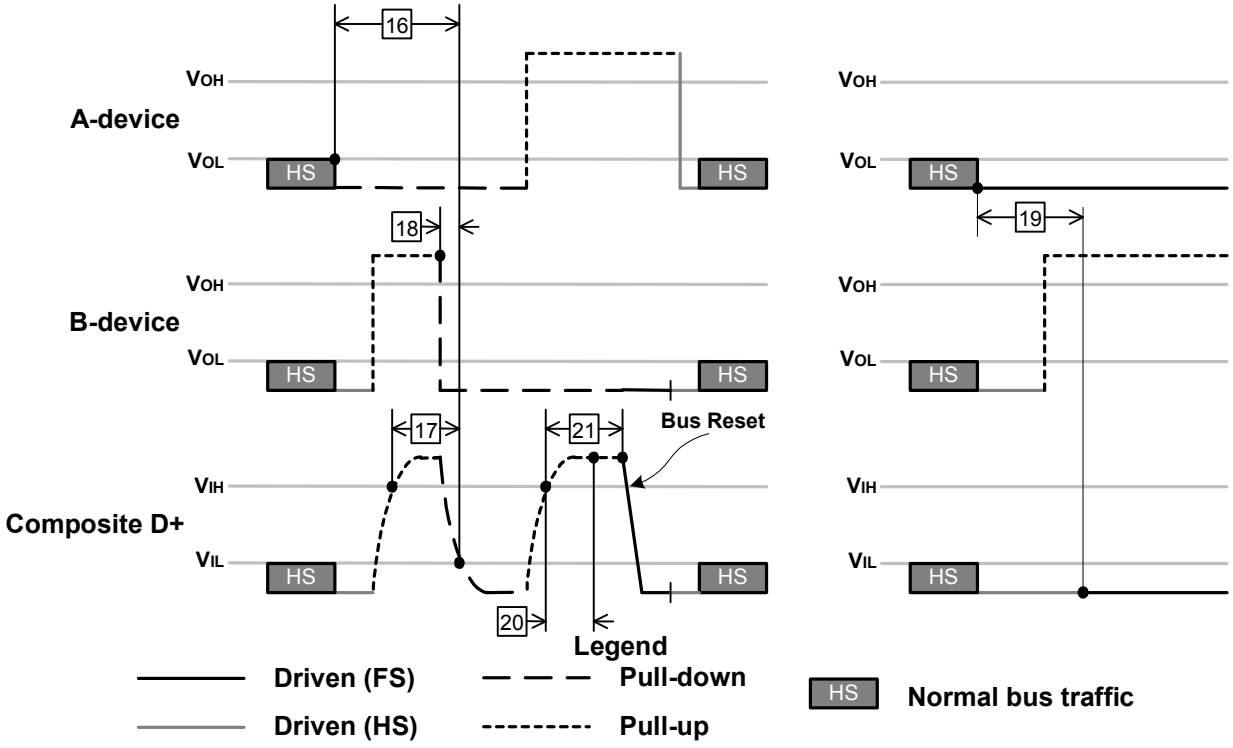

Figure 5-7 B-device HNP Timing Reference (HS)

6. Host Negotiation Protocol

6.1 Introduction

Since dual-role devices have a Mini-AB receptacle, a dual-role device can default to being either Host or Peripheral, depending up which type of plug (Mini-A plug for Host, Mini-B plug for Peripheral) is inserted. By utilizing the Host Negotiation Protocol (HNP), a dual-role B-device, which is the default Peripheral, may make a request to be Host. The process for this exchange of the role of Host is described in this section. This protocol eliminates the need for the consumer to swap the cable connection in order to change the roles of the connected devices.

6.2 Description Priority

HNP and SRP are described in this section by each of the following methods:

- state diagrams
- text

In the case of a conflict between these two descriptions, the state diagrams shall take precedence.

It should be noted that the state diagrams are presented to show one possible implementation of the HNP and SRP protocols. An implementation that exhibits an equivalent behavior as observed at the USB connector pins would also be considered to be in compliance with this specification.

6.3 HNP Overview

HNP is used to transfer control of a connection from the default Host (A-device) to the default Peripheral (B-device). This is accomplished by having the A-device condition the B-device to be able to take control of the bus, and then having the A-device present an opportunity for the B-device to take control.

The B-device is conditioned when the A-device sends a SetFeature(b_hnp_enable) command. After sending this command, the A-device may suspend the bus to signal the B-device that it may now take control of the bus. If the B-device wants to use the bus at that time, it signals a disconnect to the A-device. If the A-device has enabled the B-device to become Host, then the A-device will interpret this disconnect during suspend as a request from the B-device to become Host. The A-device will complete the handoff by turning on it's pull-up resistor on D+.

When the B-device has finished using the bus, it starts the process of returning control to the A-device simply by stopping all bus activity and turning on its D+ pull-up resistor when the bus is in FS idle. The A-device will detect this lack of activity and turn off its pull-up resistor. When the A-device detects the connection from the B-device, it will resume bus operation as Host.

The sequence of events for HNP as observed on the USB are illustrated in Figure 6.1.

DELL/HP/LENOVO EXHIBIT 1016
Page 58

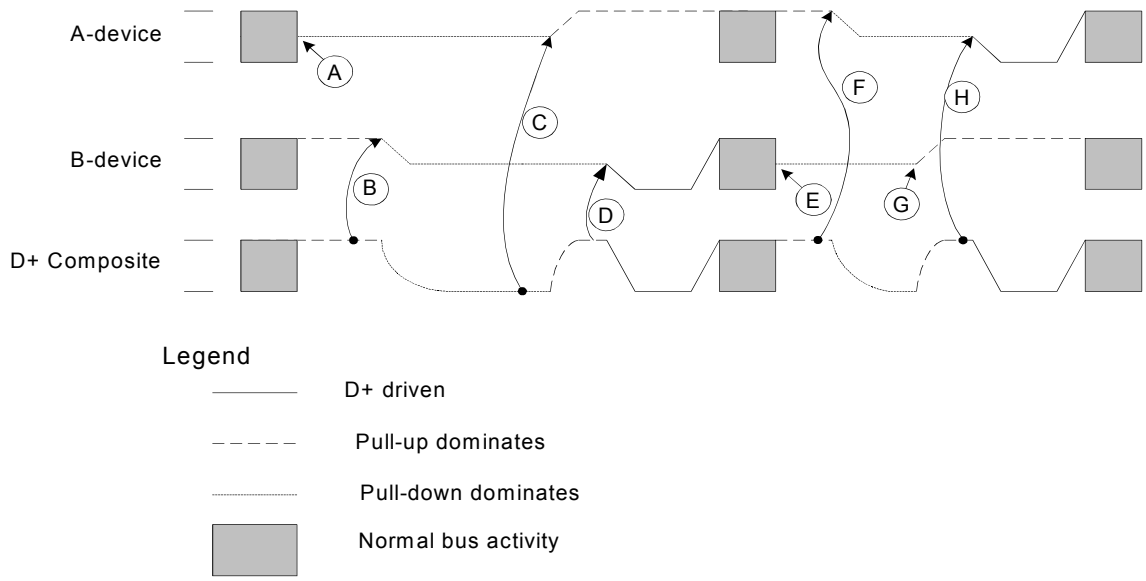

Figure 6-1 HNP Sequence of Events

A) A-device finishes using bus and stops all bus activity, (i.e. suspends the bus).

B) B-device detects that bus is idle for more than $T_{B_AIDL_BDIS}$ min and begins HNP by turning off pull-up on D+. This allows the bus to discharge to the SE0 state. If the bus was operating in HS mode, the B-device will first enter the full-speed mode and turn on its D+ pull-up resistor for at least $T_{B_FS_BDIS}$ min before turning off its pull up to start the HNP sequence.

Note: After B-device enters the FS mode and turns on its pull-up resistor; it waits to see if the data line goes high. If the data line does not go high within TWTRSTHS (from Table 7-14 in USB 2.0 specification), then the B-device shall start its HS chirp. Otherwise, if the D+ line does go high for at least TB_FS_BDIS min, then the B-device may start HNP.

C) The A-device detects the SE0 on the bus and recognizes this as a request from the B-device to become Host. The A-device responds by turning on its D+ pull-up within $T_{A_BDIS_ACON}$ max of first detecting the SE0 on the bus.

D) After waiting long enough to insure that the D+ line cannot be high due to the residual effect of the B-device pull-up, (see Section 5.1.9), the B-device sees that the D+ line is high and D- low, (i.e. J state). This indicates that the A-device has recognized the HNP request from the B-device. At this point, the B-device becomes Host and asserts bus reset to start using the bus. The B-device must assert the bus reset (SE0) within $T_{B_ACON_BSE0}$ max of the time that the A-device turns on its pull-up.

E) When the B-device completes using the bus, it stops all bus activity. (Optionally, the B-device may turn on its D+ pull-up when a FS idle condition is detected on the bus.)

F) A-device detects lack of bus activity for more than $T_{A_BIDL_ADIS}$ min and turns off its D+ pull-up. Alternatively, if the A-device has no further need to communicate with the B-device, the A-device may turn off V_{BUS} and end the session.

G) B-device turns on its pull-up.

H) After waiting long enough to insure that the D+ line cannot be high due to the residual effect of the A-device pull-up, (see Section 5.1.9), the A-device sees that the D+ line is high (and D- low)

indicating that the B-device is signaling a connect and is ready to respond as a Peripheral. At this point, the A-device becomes Host and asserts bus reset to start using the bus.

6.4 OTG Descriptor

During enumeration, a dual-role A-device shall request the OTG configuration descriptor from the B-device. Any B-device that supports either HNP or SRP must respond by providing this descriptor in the group of descriptors returned in response to a GetDescriptor(Configuration) command. When present, the OTG descriptor shall be present in all configurations. This three-byte descriptor consists of three fields: *bLength*, *bDescriptorType*, and *bmAttributes*, with bits as defined in the following table.

Table 6-1. OTG Descriptor

Offset	Field	Size	Value	Description
0	*bLength*	1	Number (3)	Size of Descriptor
1	*bDescriptorType*	1	Constant	OTG type = 9
2	*bmAttributes*	1	Bitmap	Attribute Fields D7…2: Reserved (reset to zero) D1: HNP support D0: SRP support

6.4.1 srp_support

This bit is set to TRUE if the device supports SRP. This bit is not used by the A-device during normal operation. However, this bit is used during compliance testing to automatically detect the capabilities of the B-device.

6.4.2 hnp_support

This bit is set to TRUE if the device supports HNP. If the hnp_support bit is TRUE, then srp_support must also be TRUE.

6.5 Set Feature Commands

An A-device may use the SetFeature command to enable certain behaviors on the B-device or to indicate certain capabilities of the A-device to the B-device. Any HNP capable device is required to accept the SetFeature commands for these features. If the device is not HNP capable, it shall return STALL if it receives a SetFeature command for any of these features

A B-device that supports these features shall be able to accept the SetFeature command in the Default, Address and Configured states. (It should be noted that the USB 2.0 specification states that setting a feature in the Default state for other than test modes is unspecified. This supplement adds to the list of features that can be set in the Default state.)

Setting one of these features when it is already set is not an error. The device receiving such a command will acknowledge the command indicating successful completion.

A SetFeature command for these features shall be executed on receipt of an uncorrupted command packet.

DELL/HP/LENOVO EXHIBIT 1016
Page 60

Table 6-2. Set Feature Command Format

bmRequestType	bRequest	Wvalue	wIndex	wLength	Data
00000000B	SET_FEATURE	Feature Selector	Zero	Zero	None

Table 6-3. On-The-Go Feature Selectors

Feature Selector	Value
b_hnp_enable	3
a_hnp_support	4
a_alt_hnp_support	5

6.5.1 b_hnp_enable

Setting this feature indicates to the B-device that it has been enabled to perform HNP. An A-device may set this feature if, and only if, the B-device is connected directly to an A-device port that supports HNP (i.e. no intervening hub between the Host and the B-device).

The b_hnp_enable feature takes precedence over either the a_hnp_support or a_alt_hnp_support features. Thus, if b_hnp_enable is set, then HNP is enabled in the B-device, regardless of whether or not the a_hnp_support or a_alt_hnp_support bits are set.

This feature is only cleared on a bus reset or at the end of a session. It cannot be cleared with a ClearFeature(b_hnp_enable) command.

6.5.2 a_hnp_support

Setting this feature indicates to the B-device that it is directly connected to an A-device port that supports HNP.

The A-device shall set this feature on any B-device that is connected to an A-device port that supports HNP. The A-device shall set this feature at the start of a session, before any B-device configuration is selected.

If the A-device port that is connected to the B-device is not HNP capable, then the A-device shall not set this feature.

Before putting the B-device into a configuration, the A-device has the following three options with regards to the b_hnp_enable and a_hnp_support features:

- set the b_hnp_enable feature
- set the a_hnp_support feature but not the b_hnp_enable feature
- set neither the b_hnp_enable nor a_hnp_support features

If the b_hnp_enable feature is set, the B-device is allowed to do HNP, regardless of whether or not the a_hnp_support feature is set.

If the a_hnp_support feature is set, but the b_hnp_enable feature is not set, then it is likely that b_hnp_enable will be set later when the A-device is finished using the bus.

DELL/HP/LENOVO EXHIBIT 1016
Page 61

If neither the b_hnp_enable or a_hnp_support features are set before the A-device puts the B-device in a non-default configuration, then the B-device may at indicate to the user that HNP is not supported through the current connection.

The a_hnp_support feature is only cleared on a bus reset or at the end of a session. It cannot be cleared with a ClearFeature(a_hnp_support) command.

6.5.3 a_alt_hnp_support

Setting this feature indicates to the B-device that it is connected to an A-device port that is not capable of HNP, but that the A-device does have an alternate port that is capable of HNP.

The A-device is required to set this feature under the following conditions:

- the A-device has multiple receptacles
- the A-device port that connects to the B-device does not support HNP
- the A-device has another port that does support HNP

This feature is cleared at the end of a session. If this bit is set, and the user launches an Application that requires the B-device to be Host, then the B-device can provide a message to the user indicating that the user needs to connect the B-device to an alternate port on the A-device.

If both a_alt_hnp_support and a_hnp_support are set, then the meaning is the same as if only a_alt_hnp_support was set.

If the B-device receives a SetFeature(b_hnp_enable) command when this feature is set, then HNP is enabled in the B-device, as the b_hnp_enable bit takes precedence over the a_alt_hnp_support bit.

This feature is only cleared on a bus reset or at the end of a session. It cannot be cleared with a ClearFeature(a_alt_hnp_support) command.

6.6 State Machine Parameters

This section describes the inputs, internal variables, timers, and outputs associated with the state machines.

6.6.1 Inputs

6.6.1.1 a_bus_drop

The “A-device bus drop” (a_bus_drop) input is TRUE when the Application running on the A-device needs to power down the bus, and is FALSE otherwise. When this input is TRUE, then the a_bus_req input must be FALSE.

6.6.1.2 a_bus_req

The “A-device bus request” (a_bus_req) input is TRUE during the time that the Application running on the A-device wants to use the bus, and is FALSE when the Application no longer wants to use the bus.

6.6.1.3 a_bus_resume

The “A-device bus resume” (a_bus_resume) variable is TRUE when the B-device detects that the A-device is signaling a resume (i.e. K state) on the bus.

DELL/HP/LENOVO EXHIBIT 1016
Page 62

If the B-device has transitioned to the **b_wait_acon** state, then a resume (i.e. K state) from the A-device will cause the B-device to return to the **b_peripheral** state.

Section 7.1.7.7 of the USB 2.0 specification, states that the downstream device (in this case the B-device) interprets any non-idle signal as an indication that the upstream device (in this case the A-device) is resuming operation of the bus. If the B-device is in the **b_peripheral** state, then this definition for resume signaling holds.

However, if the B-device is in the **b_wait_acon** state, then only a J-to-K transition is treated as a resume. After the B-device turns off its pull-up resistor the bus will be pulled to the SE0 state by the pull-downs on the A and B devices. This SE0 is not a resume indication. If the SE0 persists for more than $T_{B_ASE0_BRST}$ min, then the A-device is not responding to the HNP request from the B-device and the B-device shall treat the SE0 on the bus as a bus reset indication. This takes the B-device back to the **b_peripheral** state.

6.6.1.4 a_bus_suspend

The "A-device bus suspend" (a_bus_suspend) variable is TRUE when the B-device detects that the A-device has put the bus into suspend.

If the B-device has been enabled to become Host (b_hnp_enable feature has been set), then the B-device uses this variable to transition from the **b_peripheral** state to the **b_wait_acon** state

As per Section 7.1.7.6 of the USB 2.0 specification, the downstream device (in this case the B-device) interprets more than 3 ms of idle as an indication that the upstream device has suspended the bus.

6.6.1.5 a_conn

The "A-device connect" (a_conn) variable is used by the B-device as a condition for entering or exiting the **b_host** state.

If the B-device is in the **b_wait_acon** state, the B-device sets a_conn TRUE if the B-device detects a connection from the A-device. In order to detect a connection from the A-device, the B-device must insure that there is no residual voltage on the D+ line from the B-device's pull-up. (See Section 5.1.9). When the B-device has qualified the high level on the D+ line as being from the A-device, and the level has been present for at least $T_{B_ACON_DBNC}$ min then a_conn is set to TRUE.

> Note: A dual-role device is required to operate as a full-speed peripheral. Therefore, a B-device shall only accept a connection from an A-device when D+ is pulled up. If the B-device detects a high on the D- line after disconnecting, this shall be interpreted as resume signaling from the A-device.

While the B-device is in the **b_host** state, it will set a_conn FALSE if the B-device detects that the A-device has disconnected, as described in Section 7.1.7.3 of the USB 2.0 specification. The B-device also sets a_conn to FALSE whenever it goes to any state other than the **b_host** state.

6.6.1.6 a_sess_vld

The "A-device session valid" (a_sess_vld) input is TRUE if the A-device detects that the voltage on V_{BUS} is above its A-device Session Valid threshold ($V_{A_SESS_VLD}$)(see Table 5-1).

DELL/HP/LENOVO EXHIBIT 1016
Page 63

6.6.1.7 a_srp_det

The "A-device SRP detect" (a_srp_det) input is TRUE if the A-device detects SRP as defined in Section 5.3. This bit is set when either VBUS pulsing or data line pulsing is detected. This variable is set to FALSE on initial power up of the A-device or whenever the A-device transitions to the **a_wait_vfall** state.

6.6.1.8 a_vbus_vld

The "A-device VBUS valid" (a_vbus_vld) input is TRUE when the VBUS voltage is above the A-device VBUS Valid threshold. This threshold must be at or above VA_VBUS_VLD min, specified in Table 5-1.

6.6.1.9 b_bus_req

The "B-device bus request" (b_bus_req) input is TRUE during the time that the Application running on the B-device wants to use the bus, and is FALSE when the Application no longer wants to use the bus.

6.6.1.10 b_bus_resume

The "B-device bus resume" (b_bus_resume) variable is TRUE when the A-device detects that the B-device is signaling a resume on the bus.

The A-device uses this variable to transition from the **a_suspend** state to the **a_host** state.

Section 7.1.7.7 of the USB 2.0 specification, states that the upstream device (in this case the A-device) interprets any non-idle signal as an indication that the downstream device (in this case the B-device) is waking up the bus. If the B-device is not enabled for HNP, then the behavior of the A-device in response to bus activity from the B-device is as defined in the section cited above.

However, if the B-device is enabled for HNP, then only a J-to-K transition on the bus will be treated as a resume. A transition to SE0 will be treated as the start of the HNP handoff. The A-device is expected to respond by transitioning to the **a_peripheral** state and turning on its pull-up resistor on D+.

6.6.1.11 b_bus_suspend

The "B-device bus suspend" (b_bus_suspend) variable is TRUE when the A-device detects that the B-device has put the bus into suspend.

The A-device uses this variable to transition from the **a_peripheral** state to the **a_wait_bcon** state

As per Section 7.1.7.6 of the USB 2.0 specification, the downstream device (in this case the A-device) interprets more than 3 ms of idle as an indication that the upstream device has suspended the bus.

6.6.1.12 b_conn

The "B-device connect" (b_conn) variable is used by the A-device as a condition for transitioning between the following states:

On b_conn transition	Exit State	Enter State
FALSE → TRUE	**a_wait_bcon**	**a_host**
TRUE → FALSE	**a_host**	**a_wait_bcon**
TRUE → FALSE	**a_suspend**	**a_peripheral**

DELL/HP/LENOVO EXHIBIT 1016
Page 64

If b_conn is FALSE, it is set to TRUE if the B-device pulls D+ or D- high for longer than the debounce interval. The debounce interval varies depending on how the **a_wait_bcon** state was entered, and how long it has been since either D+ or D- has been pulled high. If the **a_wait_bcon** state was entered from the **a_peripheral, a_host** or **a_suspend** states, then the short debounce interval ($T_{A_BCON_SDB}$) is allowed. If the **a_wait_bcon** state was entered from the **a_wait_vrise** state then the long debounce interval ($T_{A_BCON_LDB}$) is required.

The A-device is only allowed to apply the short debounce to b_conn in a window of time. If the A-device stays in the **a_wait_bcon** state for longer than $T_{A_BCON_SDB_WIN}$ max, then the long debounce interval applies no matter how the **a_wait_bcon** state was entered. Note that if the state machine is timing the short debounce interval, changes to D- and D+ do not effect the setting of b_conn if they occur before T_{LDIS_DSCHG} min.

If the long debounce interval applies, then a new B-device connection is assumed and the A-device is required to allow the B-device to become host as described in 6.8.1.4.

While the A-device is in the **a_host** or **a_suspend** state, then the A-device will set b_conn FALSE if the A-device detects that the B-device has disconnected, as described in Section 7.1.7.3 of the USB 2.0 specification. The A-device also sets b_conn to FALSE whenever it transitions to any state other than **a_host** or **a_suspend**.

> Note: The USB 2.0 specification insures at least 100 ms from the time the device indicates a connect until the device will be reset to start the session. This is not the case for dual-role devices. They are not assured in all cases of a 100 ms interval after indicating a connect. When a dual-role device signals connect, it must be prepared to receive the bus reset that starts the session.

6.6.1.13 b_se0_srp

The “B-device SE0 before SRP” (b_se0_srp) variable is TRUE when the B-device is in the **b_idle** state, and the line has been at SE0 for more than the minimum time before generating SRP ($T_{B_SE0_SRP}$), as defined in Table 5-3.

6.6.1.14 b_sess_end

The “B-device session end” (b_sess_end) input is TRUE if the B-device detects that the voltage on V_{BUS} is below its B-Device Session End threshold ($V_{B_SESS_END}$) (see Table 5-1).

6.6.1.15 b_sess_vld

The “B-device session valid” (b_sess_vld) input is TRUE when the B-device detects that the voltage on V_{BUS} is above its B-Device Session Valid threshold ($V_{B_SESS_VLD}$)(see Table 5-1).

6.6.1.16 id

The identification (id) input is FALSE when a Mini-A plug is inserted in the device’s Mini-AB receptacle. Otherwise, this input is TRUE.

6.6.1.17 a_suspend_req

The “A-device suspend request” (a_suspend_req) input is TRUE during the time that the Application running on the A-device wants to suspend the bus for power savings, without ending the session. This input is FALSE when the Application does not desire the bus to be suspended.

6.6.2 Internal Variables

6.6.2.1 a_set_b_hnp_en

The "A-device set b_hnp_enable" (a_set_b_hnp_en) bit is TRUE when the A-device has successfully set the b_hnp_enable bit in the B-device. The A-device sets this bit at the same time as it sets the b_hnp_enable bit in the B-device, and clears this bit when it determines that the B-device should have cleared the b_hnp_enable bit.

6.6.2.2 b_srp_done

The "B-device SRP done" (b_srp_done) bit is TRUE when the B-device has completed initiating SRP.

6.6.2.3 b_hnp_enable

This is the feature defined in Section 6.5.1.

6.6.3 Outputs

6.6.3.1 chrg_vbus

The "charge VBUS" (chrg_vbus) signal is TRUE when a B-device is charging VBUS through a resistor. See Section 5.3.5.

6.6.3.2 drv_vbus

The "drive VBUS" (drv_vbus) signal is TRUE when an A-device is driving VBUS.

6.6.3.3 loc_conn

The "local connect" (loc_conn) variable is TRUE when the local device has signaled that it is connected to the bus. This variable is FALSE when the local device has signaled that it is disconnected from the bus.

See Section 6.6.1.4.

6.6.3.4 loc_sof

The "local SOF" (loc_sof) bit is TRUE when the local device is generating activity on the bus. Activity begins with a bus reset followed by start of frame packets (SOF's) or low-speed keep-alives or any other bus activity that occurs with enough frequency to prevent the Peripheral device from sensing a lack of bus activity.

6.6.4 Informative Variables

The following variables are representations of behavior that is internal to the device.

- a_bus_req
- a_bus_drop
- a_clr_err
- a_suspend_req
- b_bus_req

While the device must demonstrate behavior related to these variables (i.e. the A-device must turn on VBUS in response to some activity, corresponding to receiving an a_bus_req) the actual implementation and use of these variables is at the designer's discretion. The inclusion of these variables within the

DELL/HP/LENOVO EXHIBIT 1016
Page 66

following state machines is not meant to convey required operation, but is an informative example only to show the behavior of the system.

6.6.5 Timers

The HNP state machines make use of the following timers:

Table 6-4. Dual-Role Device Timers

Timer	Timeout Time	Timeout Indication	Associated State
a_wait_vrise_tmr	$T_{A_WAIT_VRISE}$	a_wait_vrise_tmout	**a_wait_vrise**
a_wait_bcon_tmr	$T_{A_WAIT_BCON}$	a_wait_bcon_tmout	**a_wait_bcon**
a_aidl_bdis_tmr	$T_{A_AIDL_BDIS}$	a_aidl_bdis_tmout	**a_suspend**
b_ase0_brst_tmr	$T_{B_ASE0_BRST}$	b_ase0_brst_tmout	**b_wait_acon**

All timers are started on entry to and reset on exit from their associated states.

6.6.5.1 a_wait_vrise_tmr

This timer is used by an A-device in the **a_wait_vrise** state to wait for the voltage on V_{BUS} to rise above the A-device V_{BUS} Valid threshold (a_vbus_vld = TRUE). If V_{BUS} is not above this threshold before and after $T_{A_WAIT_VRISE}$ (a_wait_vrise_tmout = TRUE), then this is an indication that the B-device is drawing too much current.

6.6.5.2 a_wait_bcon_tmr

This timer is used by an A-device in the **a_wait_bcon** state, to wait for the B-device to signal a connection, (b_conn = TRUE). If the B-device does not connect before $T_{A_WAIT_BCON}$, (a_wait_bcon_tmout = TRUE), then the A-device is allowed to stop waiting for a connection.

6.6.5.3 a_aidl_bdis_tmr

This timer is started by an A-device when it enters the **a_suspend** state. If the A-device does not detect a disconnect before $T_{A_AIDL_BDIS}$ (a_aidl_bdis_tmout = TRUE), then the A-device is allowed to stop waiting for a disconnect and end the session.

6.6.5.4 b_ase0_brst_tmr

This timer is used by a B-device in the **b_wait_acon** state, to wait for an A-device to signal a connection, (a_conn = TRUE). If the A-device does not connect before $T_{B_ASE0_BRST}$ (b_ase0_brst_tmout = TRUE), then the B-device shall assume that the A-device is signaling a bus reset and return to the **b_peripheral** state.

6.6.6 Test Device Support

A device with VID=6666 (0x1A0A), PID=47837 (0xBADD) is defined to be a test device, part of the compliance test configuration. A dual-role A-device or B-device shall treat a device with this identification as an unsupported device, and shall interact with the test device as defined in 6.8.1.4 and 6.8.2.5 when such a device is attached.

6.7 Timing Summary

6.7.1 B-device becoming Host

When a dual-role B-device has received a SetFeature(b_hnp_enable) and requires the bus, it must wait for the bus enter the Suspend state before signaling a disconnect to start HNP.

After the bus enters the Suspend state, the B-device will transition from the **b_peripheral** to **b_wait_acon** states and wait for the A-device to indicate a connect event, which would complete the transfer of control to the B-device. While waiting in the **b_wait_acon** state, the B-device may detect a K state on the bus. This indicates that the A-device is signaling a resume condition and is retaining control of the bus. In this case, the B-device will return to the **b_peripheral** state.

If the B-device has had its D+ pull-up turned off for more than T_{LDIS_DSCHG} min and a J is detected on the bus, then this is an indication that the A-device is acknowledging the HNP request and has become the Peripheral.

If the B-device at any time detects more than $T_{B_ASE0_BRST}$ min of SE0, then this is an indication that the A-device is remaining Host and is resetting the bus, as per Section 7.1.7.5 of the USB 2.0 specification. In this case the B-device shall return to the **b_peripheral** state and start to process the bus reset before $T_{B_ASE0_BRST}$ max.

If the A-device turns on its pull up before $T_{B_ASE0_BRST}$ min of the B-device disconnecting, then the B-device has until $T_{B_ACON_BSE0}$ max to start bus activity by issuing a bus reset.

6.7.2 A-device becoming Peripheral

When the A-device is in the **a_host** state and has set the dual-role B-device's HNP enable bit (b_hnp_enable = TRUE) the A-device shall place the connection to the B-device into Suspend when it is finished using the bus. If the B-device disconnects after the bus has been suspended, then this is an indication that the B-device is attempting to become Host. When the A-device detects the disconnect from the B-device, it shall turn on its D+ pull-up resistor within 3 ms ($T_{A_BDIS_ACON}$ max) to acknowledge the request from the B-device. The time in which the A-device must detect the disconnect is defined in Table 7-13 of the USB 2.0 specification.

After the A-device signals a connect, it must continue to signal a connect for at least $T_{A_BIDL_ADIS}$ min, while waiting for the B-device to issue a bus reset. This ensures that the B-device has at least $T_{B_ACON_BSE0}$ max to detect and respond to the A-device connect.

In some implementations of an A-device, the host controller may be on one chip, while the transceiver may be on another chip. The transceiver would typically have an integrated pull up resistor, that would be controlled by the host controller through a slow serial interface. In such an implementation, it may not be possible for the A-device host controller to detect the B-device disconnect, and then turn on the A-device's pull-up resistor through the slow serial interface before $T_{A_BDIS_ACON}$ max. One method for accomplishing this with the above architecture is as follows.

After finishing data transfers between the A-device and B-device, and before suspending the bus, the A-device is sending out SOF's. The B-device receives these SOF's, and does not transmit any packets back to the A-device. During this time, the A-device host controller enables a logic block in the transceiver to look for an SE0 anytime that the A-device is not transmitting. After this logic is enabled, the A-device stops transmitting SOF's and allows the bus to go idle. If the B-device disconnects, then the bus goes to SE0, and the transceiver logic automatically turns on the A-device pull up.

DELL/HP/LENOVO EXHIBIT 1016
Page 68

Regardless of the implementation, the A-device must allow the B-device to disconnect before the A-device connects. This is so that the A-device can detect the B-device disconnect, and transition out of the **a_suspend** state.

6.8 State Diagrams

The HNP state machines are contained in this section. Figure 6-2 shows the state machine of a dual-role A-device. Figure 6-3 shows the state machine of a dual-role B-device. The HNP state machine for a dual-role device is equivalent to the A-device state machine combined with the dual-role B-device state machine.

An additional state diagram for an SRP capable Peripheral-only B-device is shown in Figure 6-4.

DELL/HP/LENOVO EXHIBIT 1016
Page 69

6.8.1 Dual-role A-Device

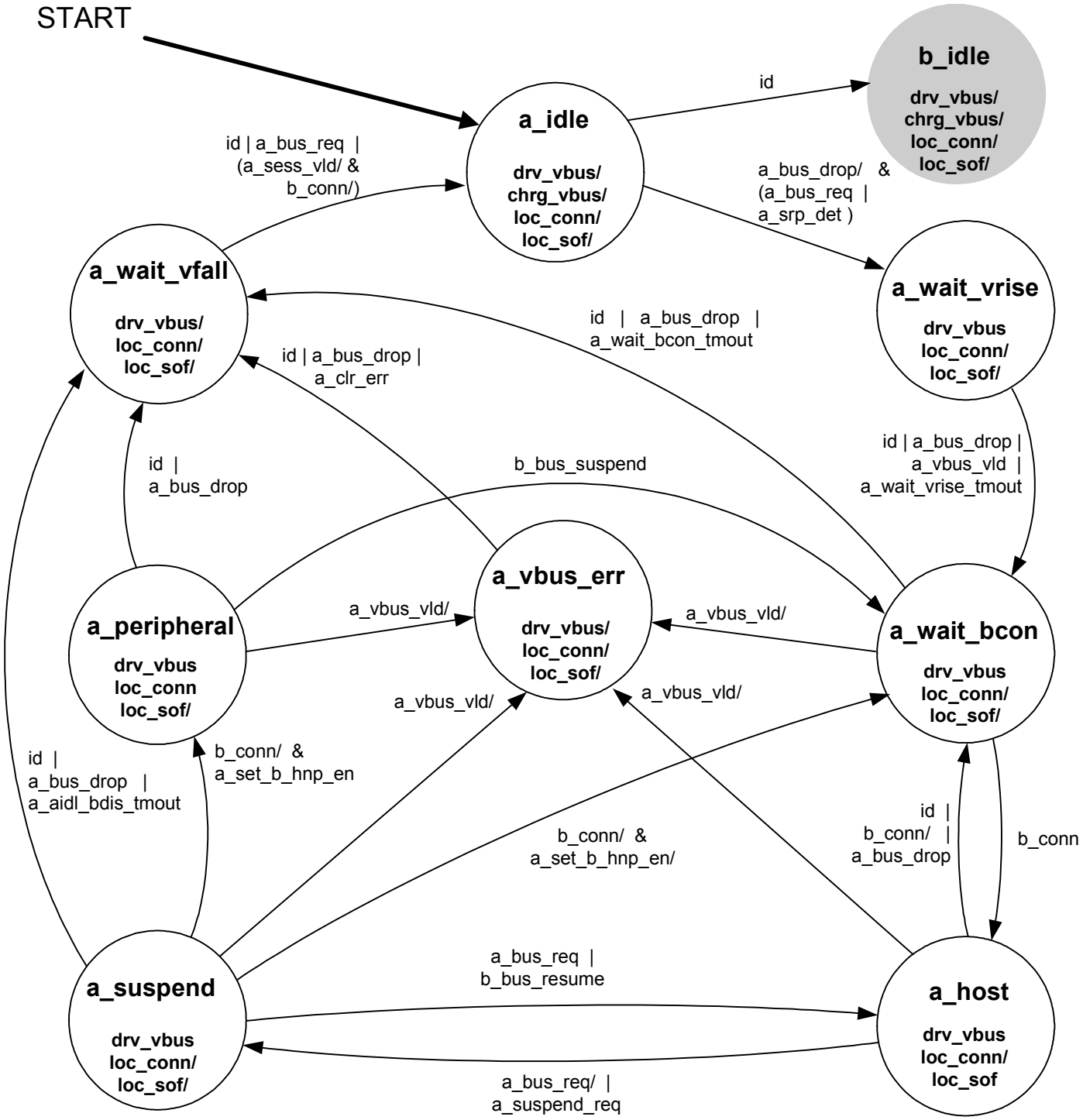

Figure 6-2 Dual-Role A-device State Diagram

DELL/HP/LENOVO EXHIBIT 1016
Page 70

The A-device state diagram shown in Figure 6-2 consists of the following eight states:

- **a_idle**
- **a_wait_vrise**
- **a_wait_bcon**
- **a_host**
- **a_suspend**
- **a_peripheral**
- **a_wait_vfall**
- **a_vbus_err**

There is a transition to the dual-role B-device start state (**b_idle**) that occurs if the cable is disconnected. When the A-Device is in any state except the **a_idle** state, the A-Device transitions to the **a_wait_vfall** state before transitioning to the **a_idle** state and then to the **b_idle** state.

6.8.1.1 a_idle

This is the start state for A-devices.

The A-device transitions to the **a_wait_vrise** state:

- if the A-device application is not wanting to drop the bus (a_bus_drop = FALSE), and
- if the A-device Application is requesting the bus (a_bus_req = TRUE), or
- SRP is detected on the bus (a_srp_det = TRUE).

6.8.1.2 a_wait_vrise

In this state, the A-device waits for the voltage on VBUS to rise above the A-Device VBUS Valid threshold (a_vbus_vld = TRUE). Upon entering this state, the A-device starts a timer: *a_wait_vrise_tmr*.

The A-device transitions to the **a_wait_bcon** state:

- if the voltage on VBUS has risen above the A-device VBUS Valid threshold (a_vbus_vld = TRUE), or
- if the *a_wait_vrise_tmr* expires.

6.8.1.3 a_wait_bcon

In this state, the A-device waits for the B-device to signal a connection. Upon entering this state, the A-device starts a timer: *a_wait_bcon_tmr*.

The A-device transitions to the **a_wait_vfall** state:

- if the cable is removed (id = TRUE), or
- if the A-device Application wants to drop the bus (a_bus_drop = TRUE), or
- if the *a_wait_bcon_tmr* times out (a_wait_bcon_tmout = TRUE).

If VBUS drops below the A-device VBUS Valid threshold (a_vbus_vld = FALSE), then the A-device transitions to the **a_vbus_err** state.

If the A-device detects the B-device signaling a connection (b_conn = TRUE), then the A-device shall end the session or transition to the **a_host** state and generate a bus reset within TA_BCON_ARST. See Section 6.6.1.12 for information on b_conn.

DELL/HP/LENOVO EXHIBIT 1016
Page 71

Note: a device may set its *a_wait_bcon_tmr* to an arbitrarily large value and wait an indefinitely long period of time for the B-device to connect.

6.8.1.4 a_host

Upon entering this state, the A-device resets the bus to prepare the B-device for packet traffic.

If a_bus_req = TRUE, then the A-device application wants to communicate with the B-device, and the A-device performs the following actions:

- A-device enumerates B-device
- if A-device supports B-device (i.e. B-device is on Targeted Peripheral List), then A-device sets up communication with B-device
- else if A-device does not support B-device then A-device outputs message to user indicating that B-device is not supported
- A-device sets a_bus_req = FALSE

Before ending the session, the A-device must allow a dual-role B-device the opportunity to take control of the bus. To do this, the A-device sends a SetFeature(b_hnp_enable) command. The A-device may send the SetFeature(b_hnp_enable) command to any B-device but is only required to send the command if the B-device is HNP capable (indicated in the OTG Descriptor). If the B-device responds to the SetFeature(B_hnp_enable) with a STALL, then the B-device is not HNP capable. If the SetFeature command is accepted, then the A-device shall exit to the **a_suspend** state and wait for the B-device to start the HNP. The A-device is allowed to transition to the **a_suspend** state without setting b_hnp_enable, if it does not want the B-device to become Host but wants to continue to power the bus (possibly in expectation of imminent user input). If it does suspend the bus without enabling HNP, then it must at some later time return to this state and enable HNP if the B-device is dual-role.

The dual-role A-device is required to perform HNP within $T_{A_SRP_RSPNS}$ max if it enumerates the B-device and discovers that the test device (defined in section 6.6.6) is attached. The dual-role A-device is not required to display an unsupported device message when attached to the test device. If the dual-role A-device does display an unsupported device message, the message shall not delay HNP. When connected to a test device, an A-device is not allowed to drive a resume signal longer than 30 seconds.

If an A-device has already granted the role of host to the test device once during a session, then the A-device is not required to grant the role of host to test device again during the same session.

Under the following conditions, the A-device transitions from the **a_host** state to the **a_wait_bcon** state:

- if the cable is removed (id = TRUE), or
- if the A-device wishes to stop powering V_{BUS} (bus_drop = TRUE), or
- if the B-device disconnects (b_conn = FALSE).

If V_{BUS} is or drops below the V_{BUS} Valid value (a_vbus_vld = FALSE), then the A-device transitions to the **a_vbus_err** state.

6.8.1.5 a_suspend

Upon entering the **a_suspend** state, the A-device starts the *a_aidl_bdis_tmr*. This timer can be set to an arbitrarily long time, but must be longer than $T_{A_AIDL_BDIS}$ min.

The A-device transitions to the **a_wait_vfall** state:

- if the a_aidl_bdis_tmr times out (a_aidl_bdis_tmout = TRUE), or

DELL/HP/LENOVO EXHIBIT 1016
Page 72

- if the A-device wishes to stop powering VBUS (bus_drop = TRUE) , or
- if the the cable is removed (id = TRUE).

If the B-device signals a disconnect (b_conn = FALSE), and the A-device was successful in setting b_hnp_enable (a_set_b_hnp_en = TRUE), then the A-device transitions to the **a_peripheral** state.

The A-device transitions to the **a_host** state if either a_bus_req is asserted, or if the B-device signals a resume by putting a K state on the bus, even if the remote_wakeup feature has not been enabled. If a_bus_req is asserted, then the A-device can either do a resume by putting a K state on the bus, or it can do a bus reset by outputting SE0 for longer than TB_ASE0_BRST max. The dual-role A-device is not allowed to resume unless the attached device is supported, or until TAIDL_BDIS max time has elapsed.

If the B-device signals a disconnect (b_conn = FALSE), and the A-device did not set b_hnp_enable (a_set_b_hnp_en = FALSE), then the A-device transitions to the **a_wait_bcon** state.

If VBUS is or drops below the A-device VBUS Valid value (a_vbus_vld = FALSE), then the A-device transitions to the **a_vbus_err** state.

6.8.1.6 a_peripheral

In this state, the A-device signals a connection to the B-device (loc conn = TRUE) and responds to requests from the dual-role B-device. If the A-device is capable of HS operation, then it shall begin the high-speed detection handshake whenever a bus reset is detected.

The A-device transitions from the **a_peripheral** state to the **a_wait_vfall** state:

- if the cable is removed (id = TRUE), or
- if the A-device is no longer capable of powering VBUS (bus_drop = TRUE).

If the A-device detects more than TA_BIDL_ADIS min of continuous idle (i.e. J_state for full-speed or SE0 for high-speed), on the bus, then the A-device may transition to the **a_wait_bcon** state. If no activity is detected after TA_ BIDL_ADIS max the A-device must transition back to the **a_wait_bcon** state.

If VBUS is or drops below the A-device VBUS Valid threshold (a_vbus_vld = FALSE), then the A-device transitions to the **a_vbus_err** state.

This is the only state in which the A-device will signal a connection to the B-device.

6.8.1.7 a_wait_vfall

In this state, the A-device waits for the voltage on VBUS to drop below the A-device Session Valid threshold (a_sess_vld = FALSE) and for the B-device to drop D+/D- to indicate that it has detected the end of the session. Once both of these conditions are met, then the A-device transitions to the **a_idle** state. If the A-device is not dual-role and does not respond to the VBUS pulsing SRP, then the A-device transitions to **a_idle** when the bus enters the SE0 state and does not wait for VBUS to fall below the Va_sess_vld, threshold.

6.8.1.8 a_vbus_err

In this state, the A-device waits for recovery of the overcurrent condition that caused it to enter this state. Upon assertion of a_clr_err (nominally by system software), the A-device transitions to the **a_wait_vfall** state.

6.8.2 Dual-Role B-Device

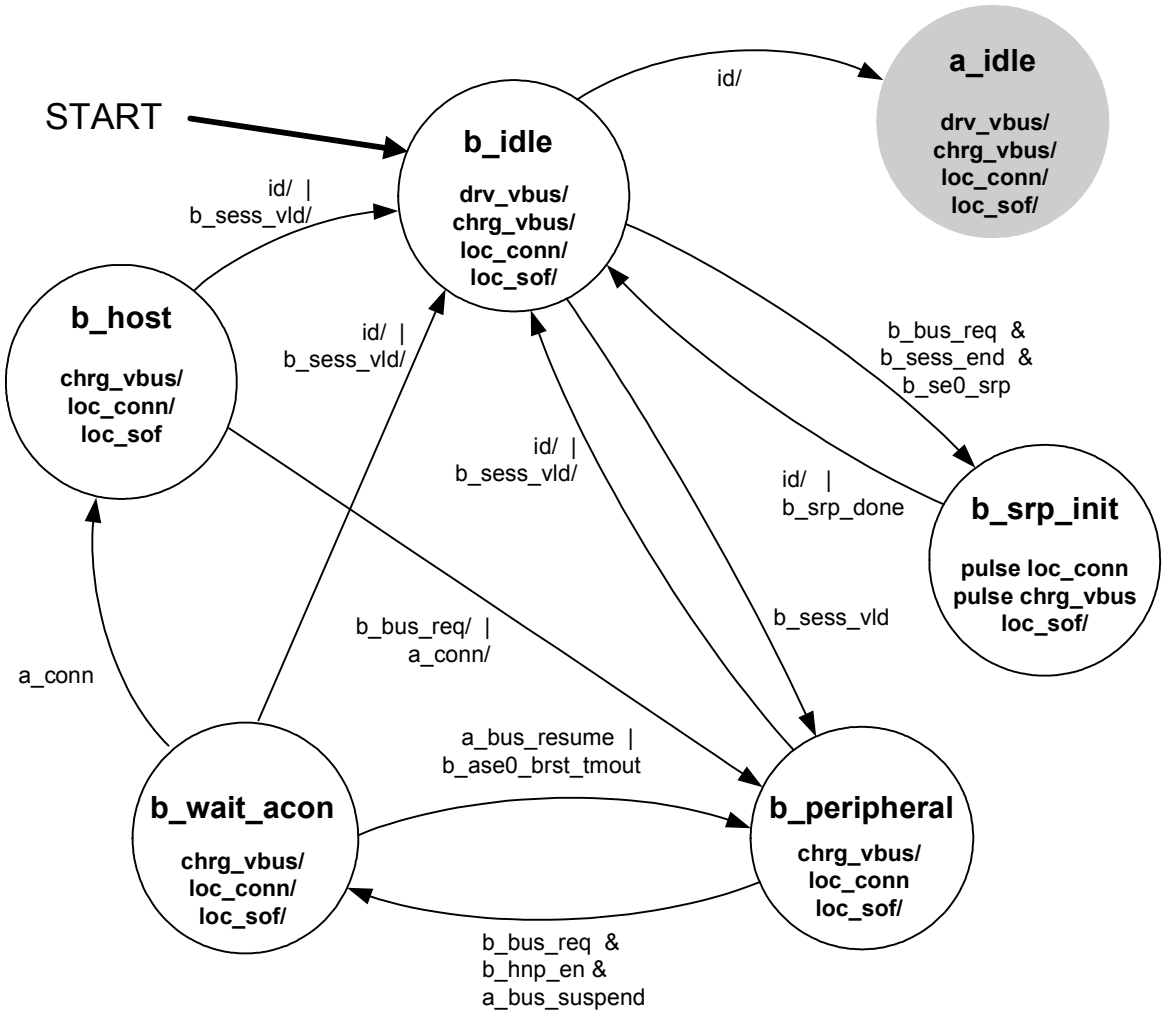

Figure 6-3 Dual-Role B-device State Diagram

The dual-role B-device state diagram consists of five distinct states:

- **b_idle**
- **b_srp_init**
- **b_peripheral**
- **b_wait_acon**
- **b_host**

6.8.2.1 b_idle

In this state, the dual-role B-device waits for a session to start by monitoring if VBUS rises above the B-Device Session Valid threshold (b_sess_vld = TRUE). If VBUS rises above this threshold, the dual-role B-device enters the **b_peripheral** state and signals a connect (loc_conn = TRUE).

DELL/HP/LENOVO EXHIBIT 1016
Page 74

The B-device transitions from the **b_idle** to the **b_srp_init** state:

- if the Application indicates that it wants to start a session (b_bus_req = TRUE), and
- if VBUS is below the B-device Session End threshold (b_sess_end = TRUE), and
- if the bus has been in the SE0 state for at least TB_SE0_SRP min.

If the Mini-A plug is inserted (id = FALSE), then the dual-role B-device transitions to the **a_idle** state and becomes an A-device.

6.8.2.2 b_srp_init

Upon entering this state, the dual-role B-device attempts to initiate a session via SRP. Upon completion, the dual-role B-device returns to the **b_idle** state, nominally to wait for the A-device to drive VBUS above the B-Device Session Valid threshold (b_sess_vld = TRUE). Since the B-Device cannot distinguish between the A-device driving Vbus high, and any residual effect of the B-device signaling SRP on Vbus, the B-device must assume that Vbus above the B-device session threshold is due to A-device driving it high.

The B-device is required to complete its SRP activities in less than TB_SRP_INIT max. On entry to this state, the B-device shall provide an indication to the user that it is trying to establish communications with the A-device and a timer is started. This timer will continue to run until the B-device enters the **b_peripheral** state. If the timer reaches a vendor specific limit between TB_SRP_FAIL min and TB_SRP_FAIL max the B-device will indicate to the user that the A-device did not respond.

6.8.2.3 b_peripheral

In this state, the dual-role B-device acts as the peripheral, and responds to requests from the A-device.

If the dual-role B-device wishes to assume the role of Host (b_bus_req = TRUE) and the A-device has granted the dual-role B-device permission (b_hnp_enable = TRUE) and the bus is in the Suspend state, then the dual-role B-device transitions to the **b_wait_acon** state. In the event that the dual-role B-device started the session with an SRP request, the dual-role B-device shall transition to the b_wait_acon state within the TA_AIDL_BDIS timeout, even if there is no longer an outstanding bus_request.

If a Mini-A plug is inserted (id = FALSE) or if VBUS drops below the B-device Session Valid threshold (b_sess_vld = FALSE), then the dual-role B-device transitions to the **b_idle** state.

When a high-speed capable B-device enters this state it shall enable its pull-up on D+. After the B-device enables its pull-up, it must monitor the state of the bus to determine if a bus reset is being signaled by the A-device. If the pull-up is turned on for TWTRSTHS (Table 7-14 in USB 2.0 specification) and the bus is in the SE0 state then a reset condition exists. (Note: The TWRTSTHS is a sample point that occurs at a device dependent time after the pull-up resistor is turned on.) If the B-device is capable of HS, it shall begin the high-speed detection handshake any time that a bus reset condition exists.

6.8.2.4 b_wait_acon

In this state, the dual-role B-device has received a SetFeature(b_hnp_enable) giving it permission to assume the role of Host and it has detected that the bus has gone to the Suspend state. Upon entering this state, the dual-role B-device turns off its pull-up resistor on D+, starts a timer (*b_ase0_brst_tmr)*, and waits for the A-device to signal a connect.

The dual-role B-device returns to the **b_peripheral** state:

- if the *b_ase0_brst_tmr* expires (b_ase0_brst_tmout = TRUE), or

DELL/HP/LENOVO EXHIBIT 1016
Page 75

- if the B-device detects a K_state on the bus, indicating that the A-device is signaling a resume (a_bus_resume = TRUE)

If the A-device signals a connect (a_conn = TRUE) before the *b_ase0_brst_tmr* expires, then the B-device transitions to the **b_host** state. The B-device shall be able to detect the connect from the A-device and transition to the **b_host** state within $T_{B_ACON_BSE0}$ max after D+ is detected to be high at the B-device.

If a Mini-A plug is inserted (id = FALSE) or V_{BUS} drops below the session valid threshold (b_sess_vld = FALSE), then the dual-role B-device transitions to the **b_idle** state.

6.8.2.5 b_host

Upon entering this state, the B-device issues a bus reset, and starts generating SOF's. The B-device may query the A-device for its descriptors.

While the B-device is in this state, the A-device responds to requests from the B-device. If the B-device does not support the A-device, then the B-device shall provide a message to the user informing them of this.

Once the B-device has completed its usage of the A-device (b_bus_req = FALSE), or if the B-device detects that the A-device has signaled a disconnect (a_conn = FALSE), or within 30 seconds of the dual-role B-device detecting that the test device (defined in section 6.6.6) is attached, then the B-device stops generating bus activity (loc_sof = FALSE) and transitions to the **b_peripheral** state.

If a Mini-A plug is inserted (id = FALSE) or V_{BUS} drops below the B-device Session Valid threshold (b_sess_vld = FALSE), then the dual-role B-device transitions to the **b_idle** state.

6.8.3 Peripheral-Only, B-Device

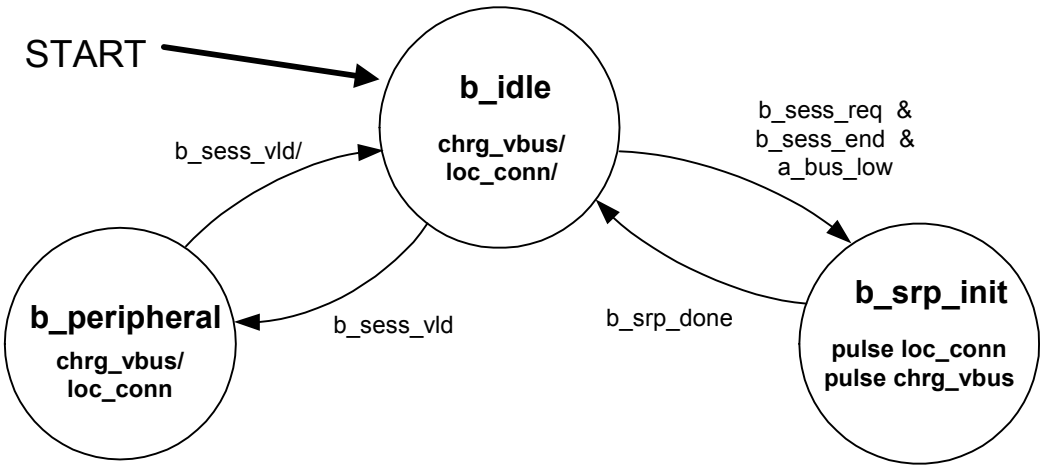

Figure 6-4 SRP Capable Peripheral-Only B-device State Diagram

The state diagram is only relevant for SRP capable Peripheral-only B-device. It consists of three distinct states:

- **b_idle**
- **b_srp_init**
- **b_peripheral**

DELL/HP/LENOVO EXHIBIT 1016
Page 76

6.8.3.1 b_idle

In this state, the Peripheral-only B-device waits for a session to start by monitoring if V_{BUS} rises above the B-device V_{BUS} Session Threshold ($V_{B_SESS_VLD}$). If V_{BUS} rises above this threshold, the Peripheral-only B-device enters the **b_peripheral** state.

The B-device transitions from the **b_idle** state to the **b_srp_init** state:

- if the Application indicates that it wants to start a session (bus_req = TRUE), and
- if V_{BUS} is below the B-device Session End threshold (b_sess_end = TRUE), and
- if the bus has been in the SE0 state for at least $T_{B_SE0_SRP}$ min.

6.8.3.2 b_srp_init

Upon entering this state, the device attempts to start a session using the SRP defined in Section 5.3. Upon completion, the device returns to the **b_idle** state.

6.8.3.3 b_peripheral

In this state, the B-device acts as a normal, USB 2.0 compliant device.

If V_{BUS} drops below the B-device Session Valid threshold (b_sess_vld = FALSE), then the device transitions to the **b_idle** state.

DELL/HP/LENOVO EXHIBIT 1016
Page 77