US 20120171332A1

(19) United States

(12) Patent Application Publication

(10) Pub. No.: US 2012/0171332 A1

(43) Pub. Date: Jul. 5, 2012

LAI et al.

(54) **BREWED BEVERAGE APPLIANCE AND METHOD**

(75) Inventors: **KIN MAN LAI**, HONG KONG (CN); **KAM FAI FUNG**, HONG KONG (CN); **BARBARA LYNN SCHNABEL**, CHAPPAQUA, NY (US)

(73) Assignee: **CONAIR CORPORATION**, STAMFORD, CT (US)

(21) Appl. No.: **13/338,926**

(22) Filed: **Dec. 28, 2011**

Related U.S. Application Data

(63) Continuation-in-part of application No. 13/231,021, filed on Sep. 13, 2011, Continuation-in-part of application No. 13/231,035, filed on Sep. 13, 2011, Continuation-in-part of application No. 13/230,980, filed on Sep. 13, 2011, Continuation-in-part of application No. 13/230,954, filed on Sep. 13, 2011.

(60) Provisional application No. 61/413,744, filed on Nov. 15, 2010.

Publication Classification

(51) **Int. Cl.**

A47J 31/42	(2006.01)
A23F 5/26	(2006.01)
B65B 29/02	(2006.01)

(52) **U.S. Cl.** **426/78**; 99/286; 99/281; 426/431

(57) **ABSTRACT**

A beverage appliance includes a housing having a liquid reservoir and a receptacle in the housing dimensioned to receive a container containing at least one drink ingredient having particles of a first size. The receptacle is pivotable from a first position in which the receptacle is angled towards a front of the appliance and a second position in which the receptacle is aligned with a brew head and contacts the brew head. The beverage appliance further includes a mechanism for transforming the particles of the drink ingredient from the first size to a second size within the container, the second size being smaller than the first size.

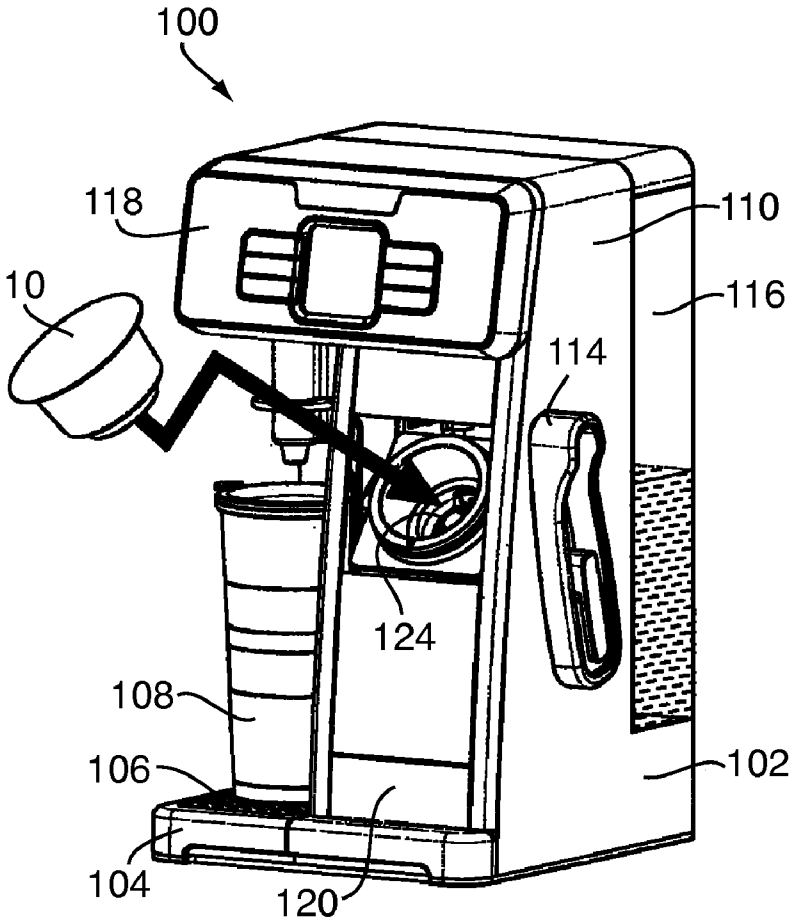

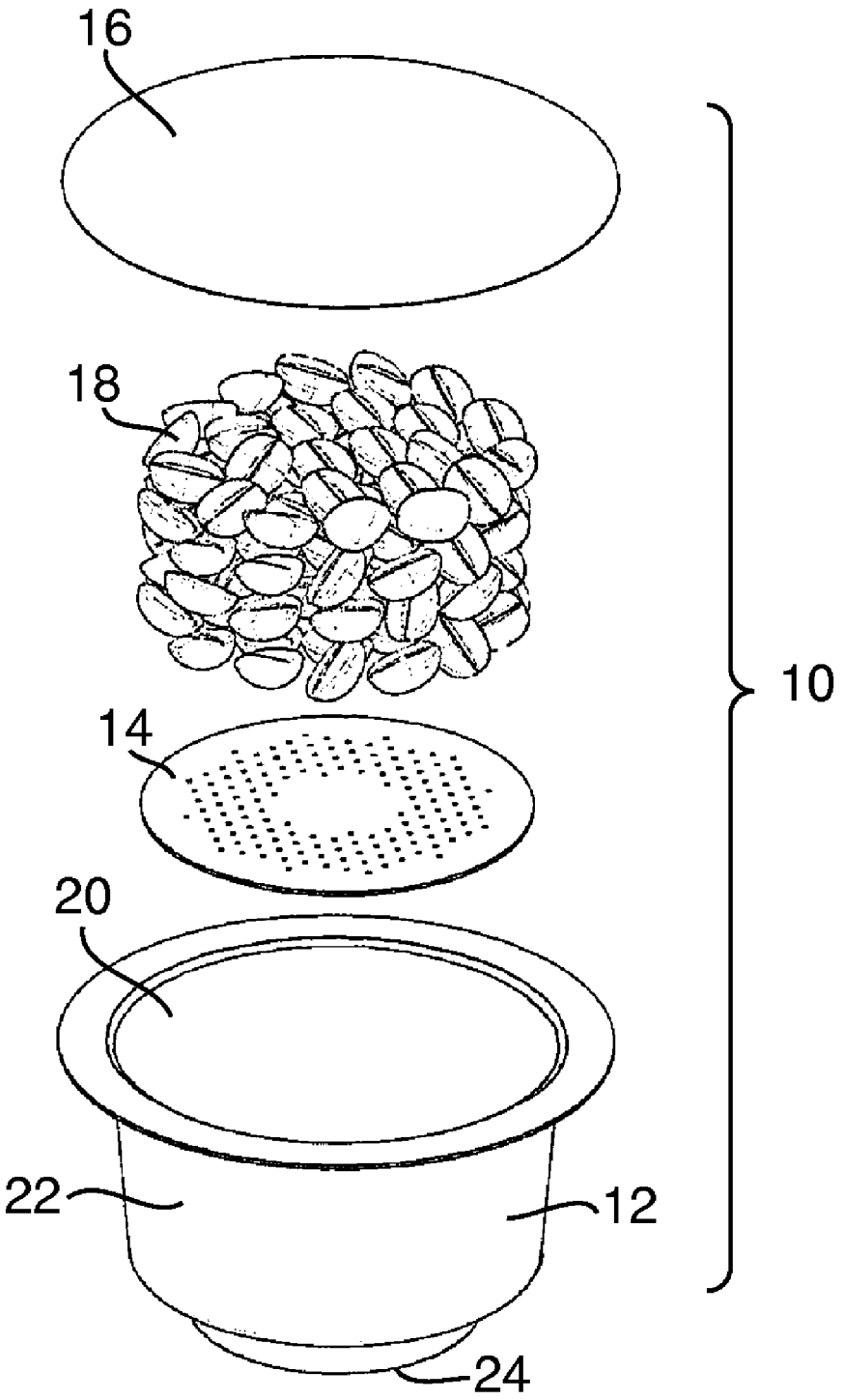

FIG. 1

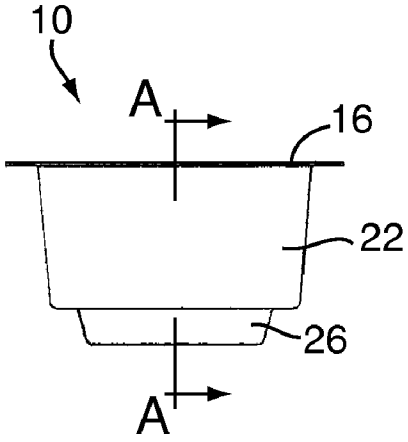

FIG. 6

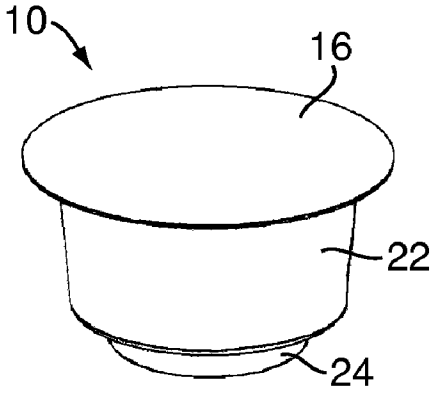

FIG. 2

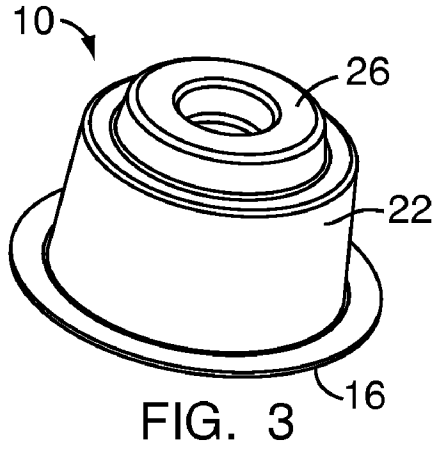

FIG. 3

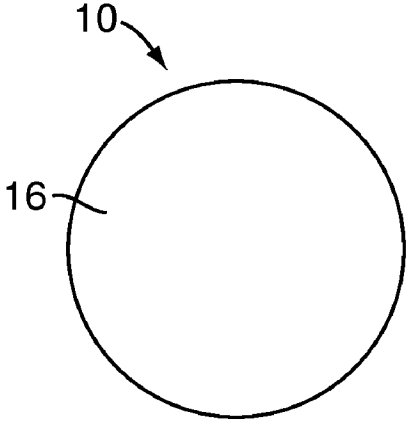

FIG. 4

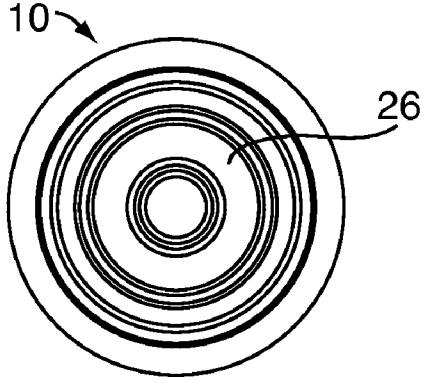

FIG. 5

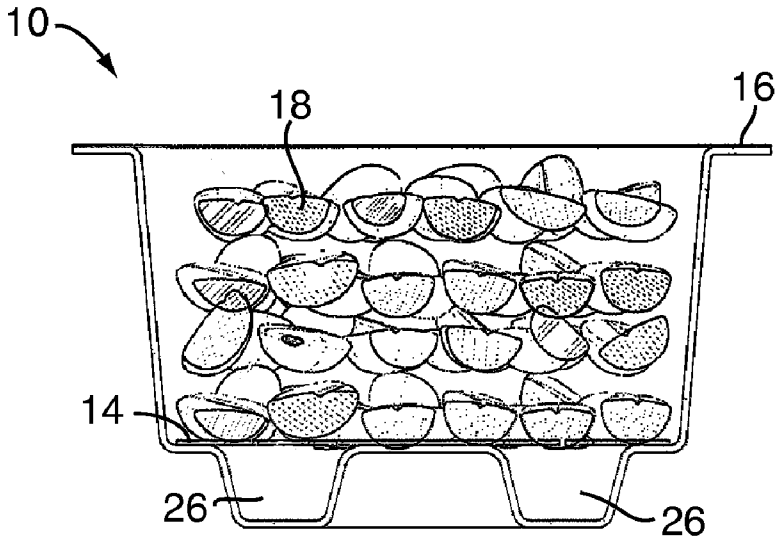

FIG. 7

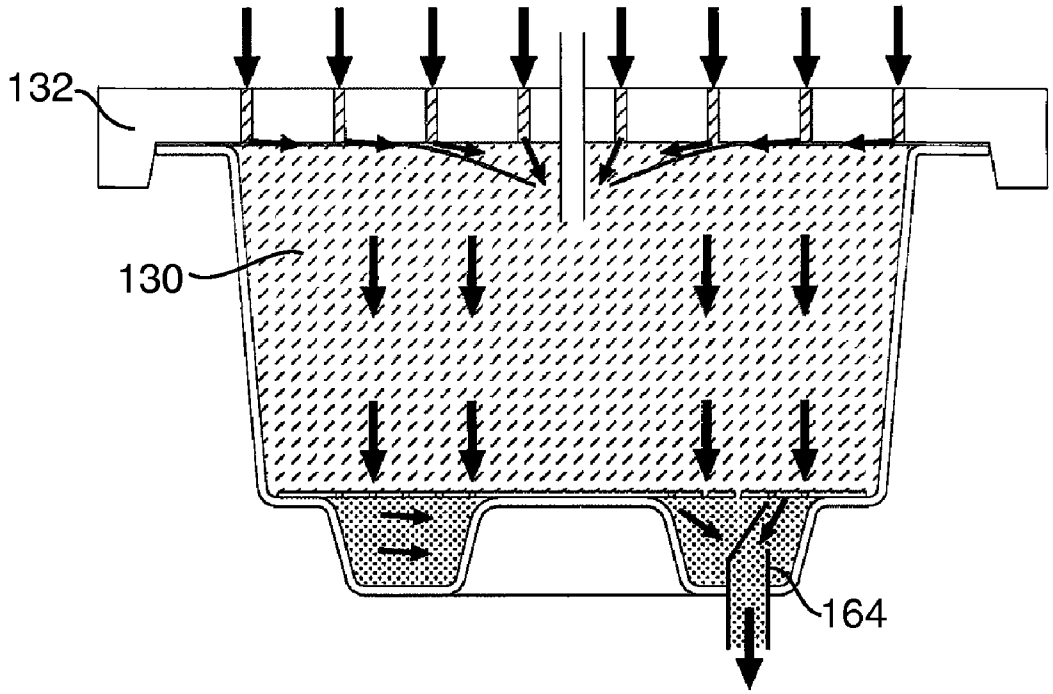

FIG. 8

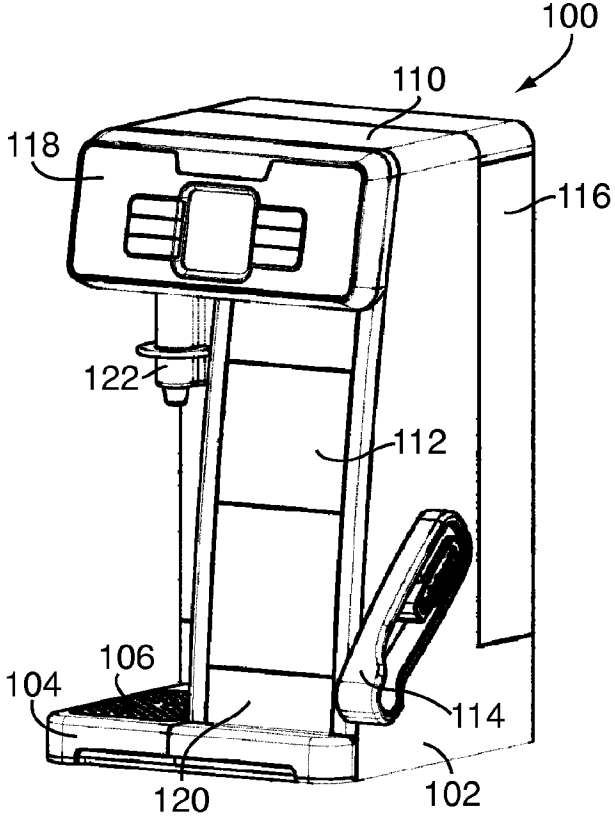
100
110
118
116
122
112
106
104
114
120
102

FIG. 9

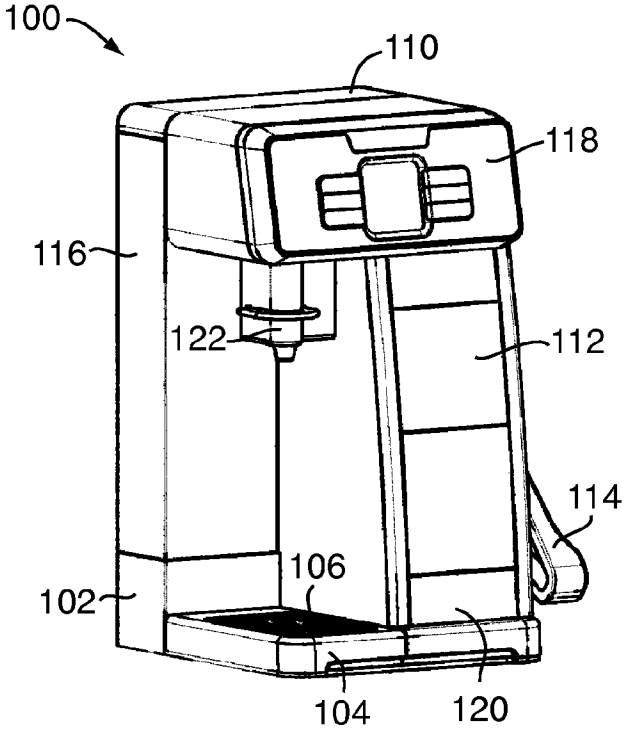
100
110
118
116
122
112
114
106
102
104
120

FIG. 10

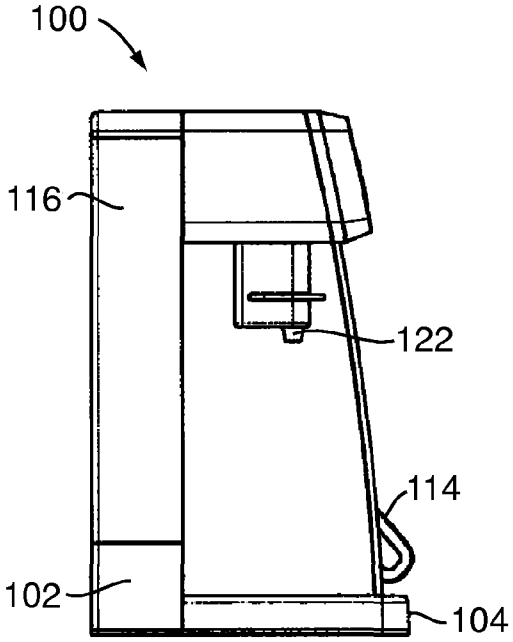

FIG. 11

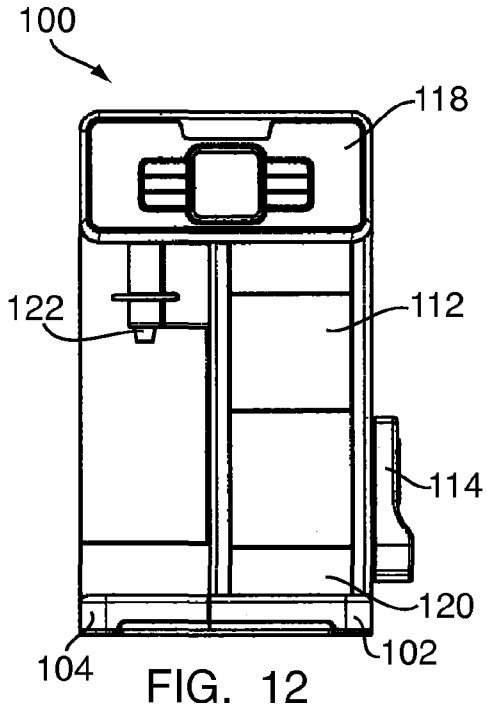

FIG. 12

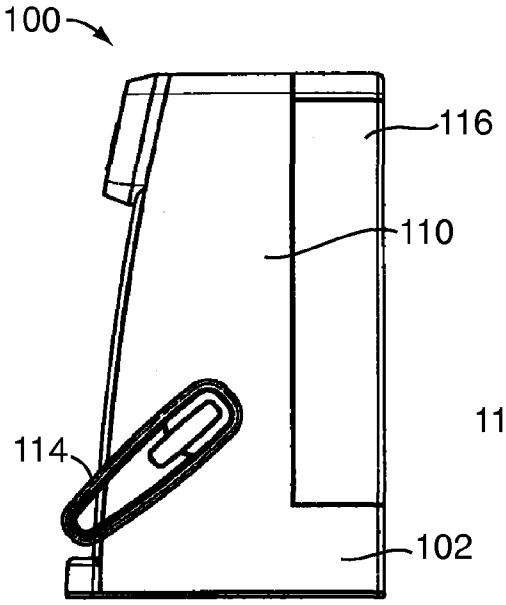

FIG. 13

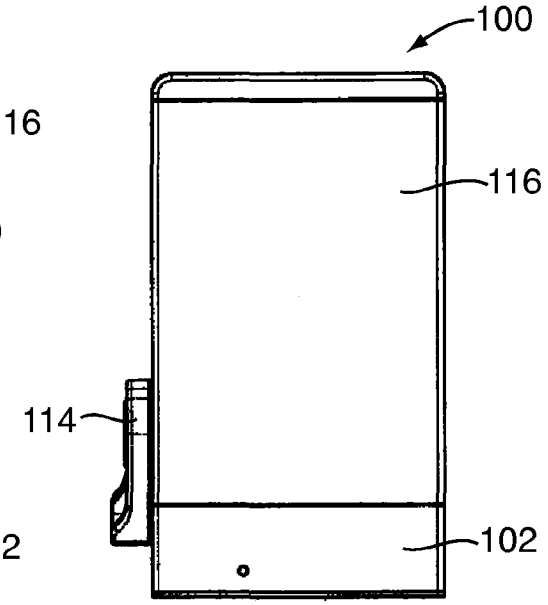

FIG. 14

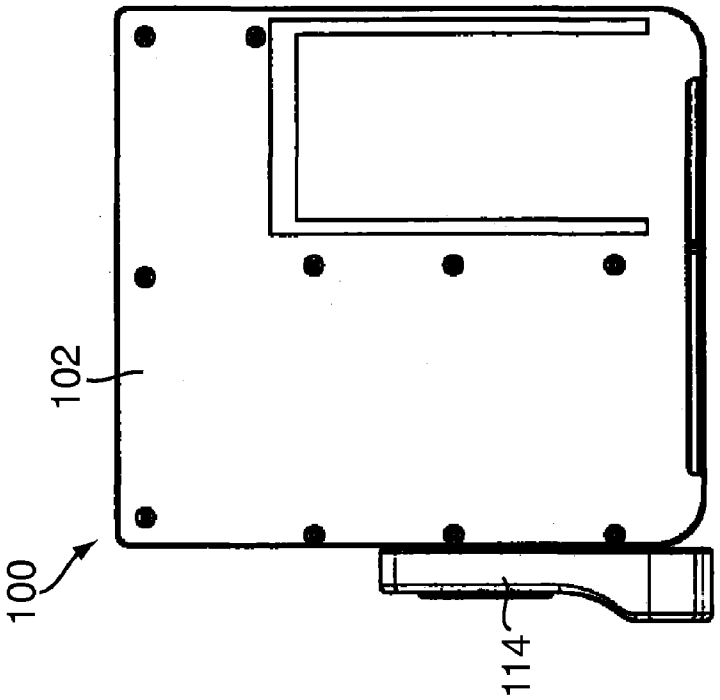

FIG. 16

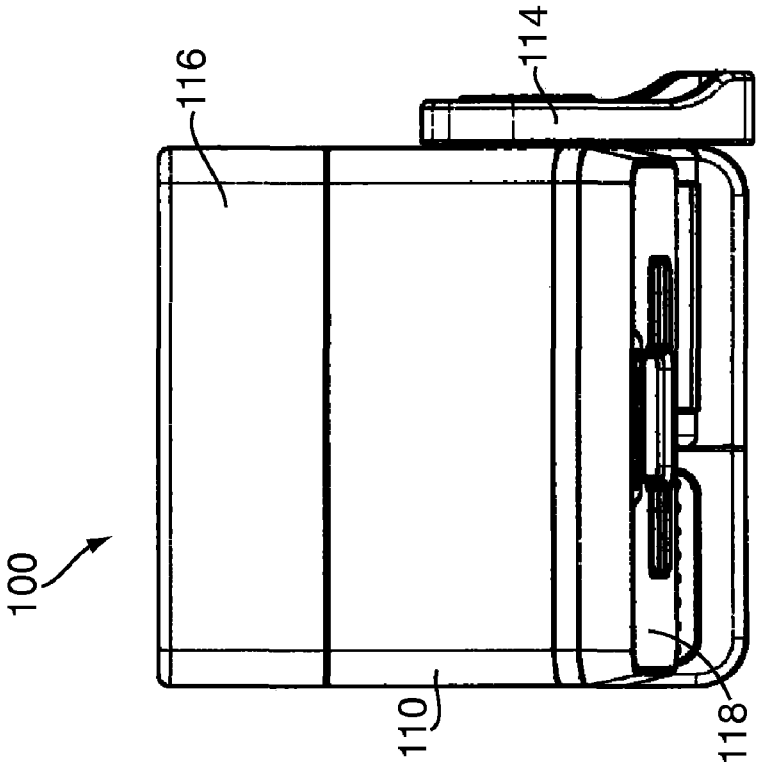

FIG. 15

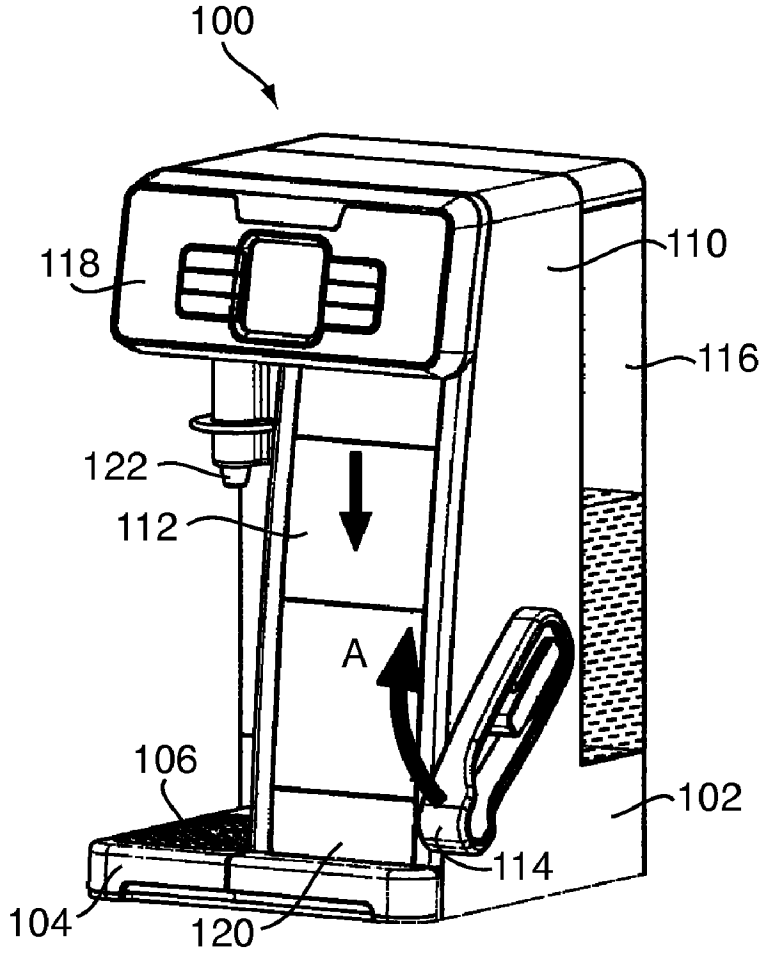
100
118
110
116
122
112
A
106
102
114
104
120

FIG. 17

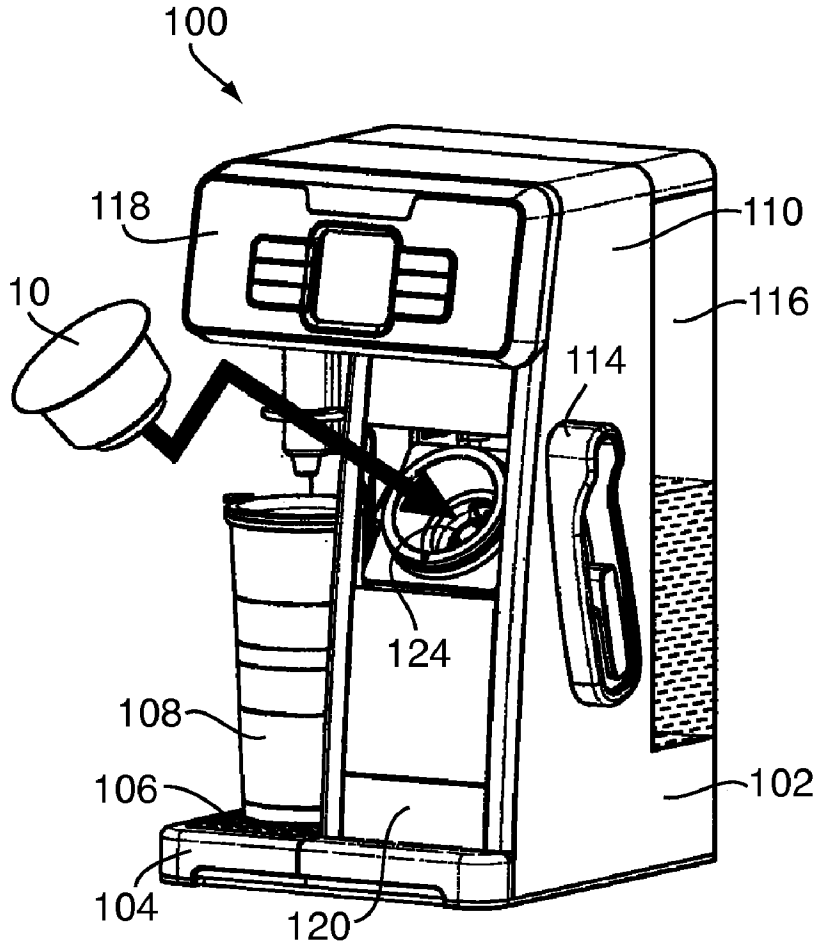
100
118
110
10
116
114
124
108
106
102
104
120

FIG. 18

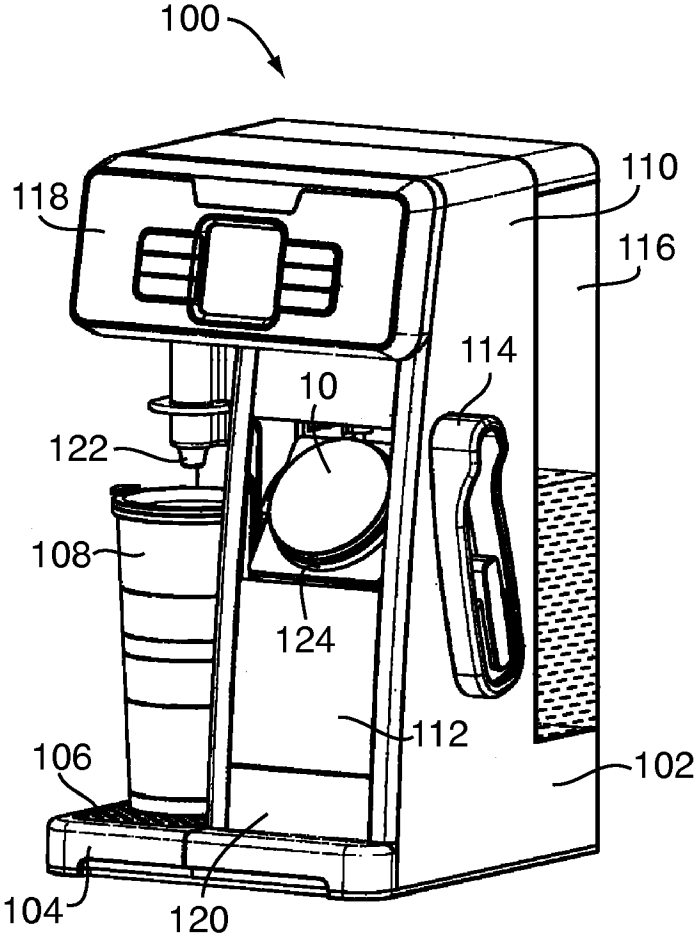
100
118
110
116
114
10
122
108
124
112
106
102
104
120

FIG. 19

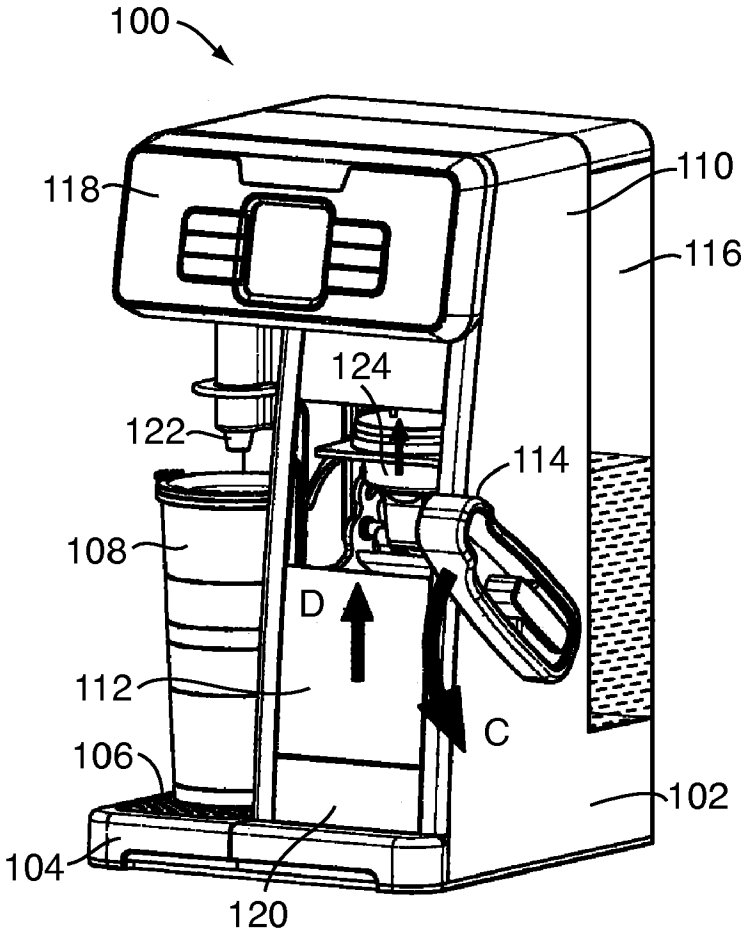
100
118
110
116
124
122
114
108
D
112
C
106
102
104
120

FIG. 20

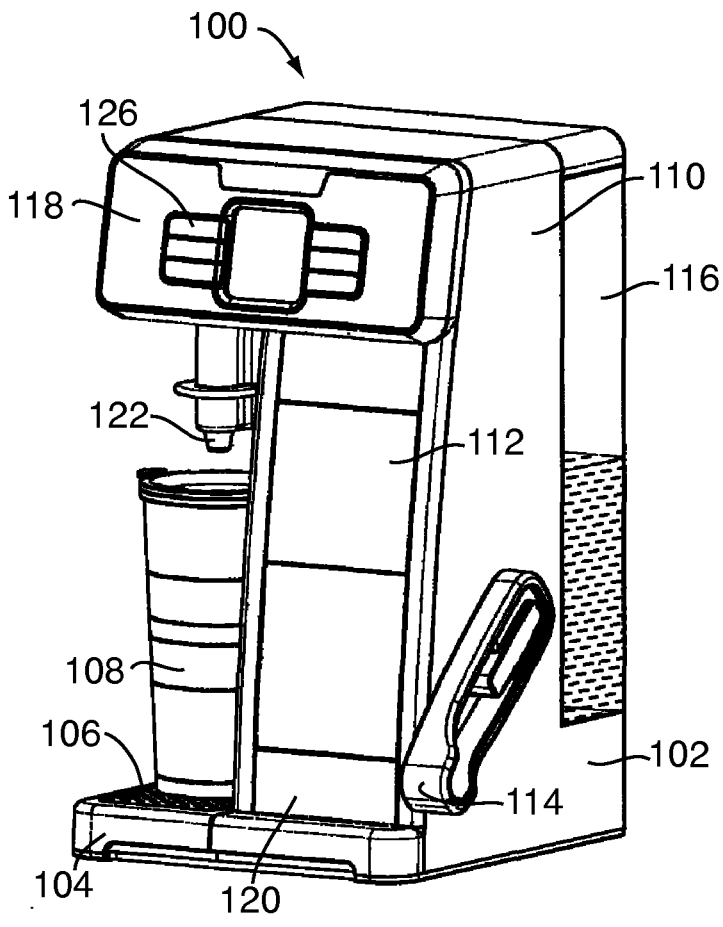
100
126
118
110
116
122
112
108
106
102
114
104
120

FIG. 21

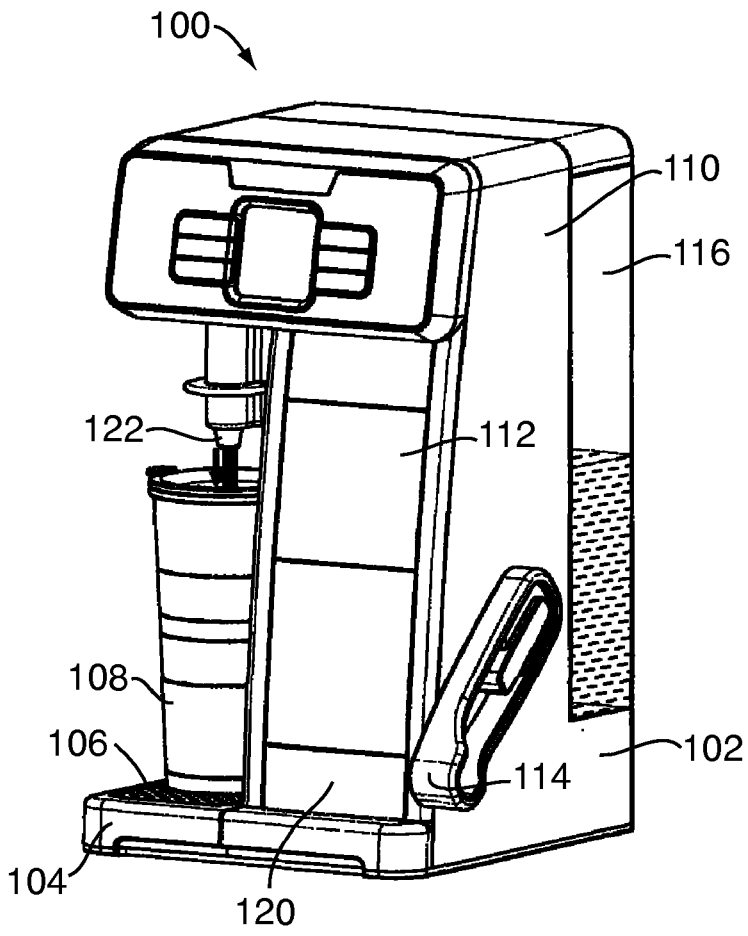
100
110
116
122
112
108
106
102
114
104
120

FIG. 22

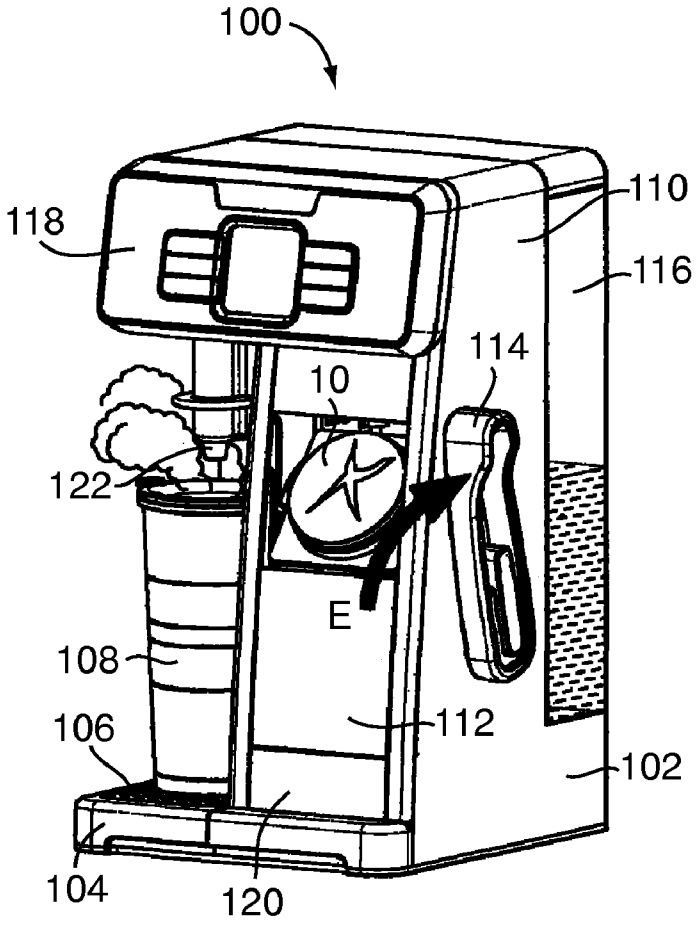
100
118
110
116
114
10
122
E
108
106
112
102
104
120

FIG. 23

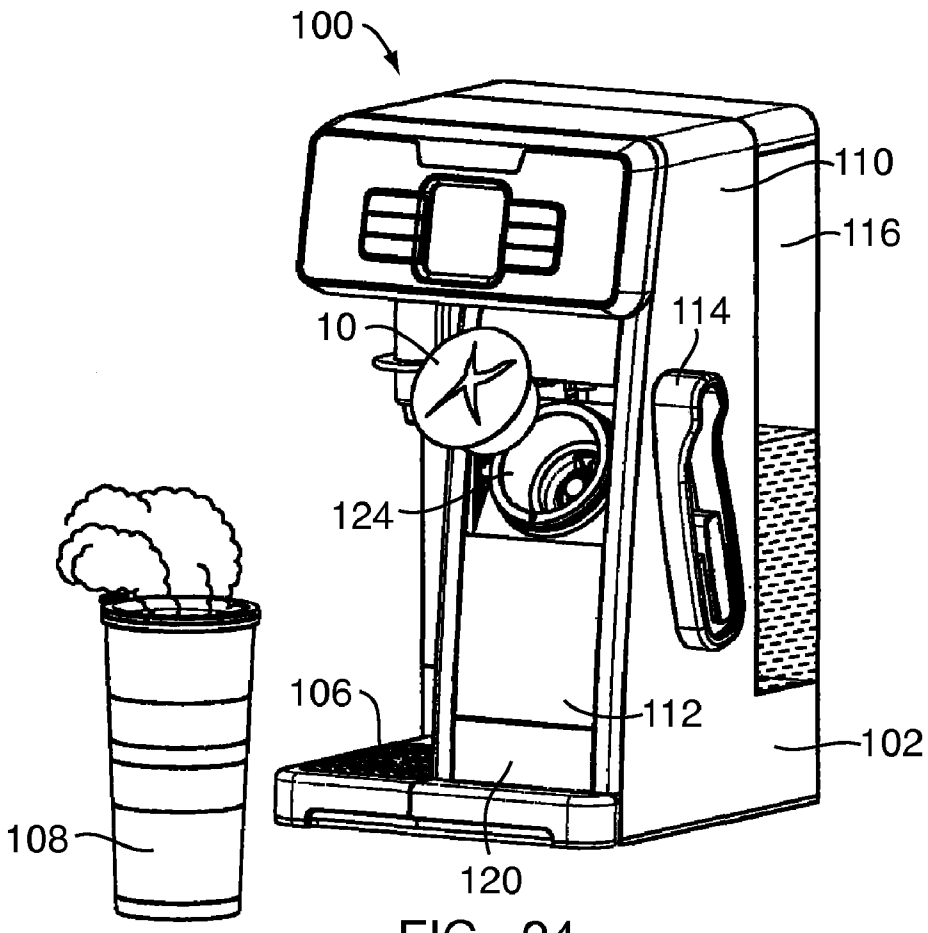
100
110
116
10
114
124
106
112
102
108
120

FIG. 24

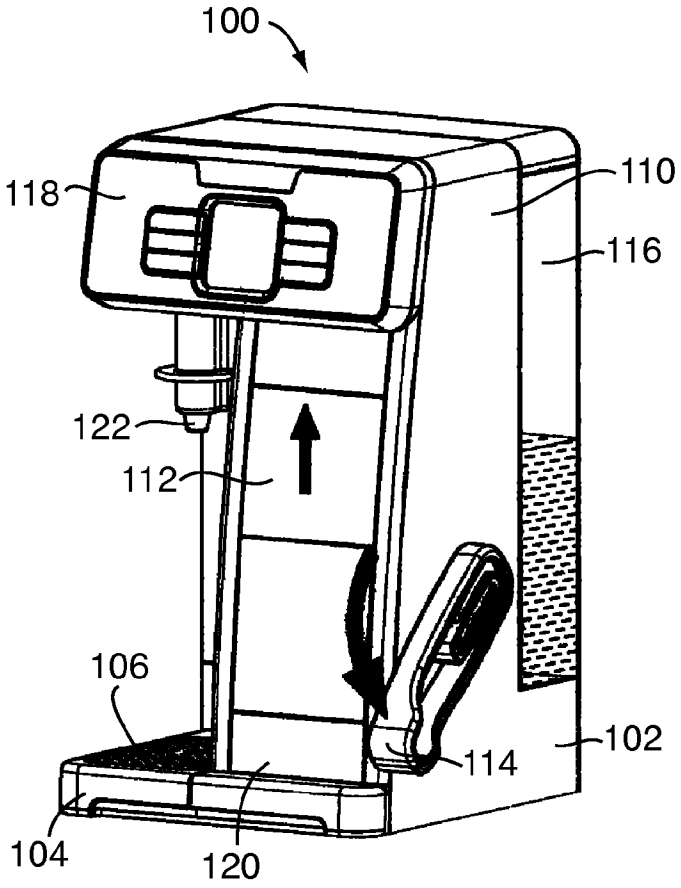

FIG. 25A

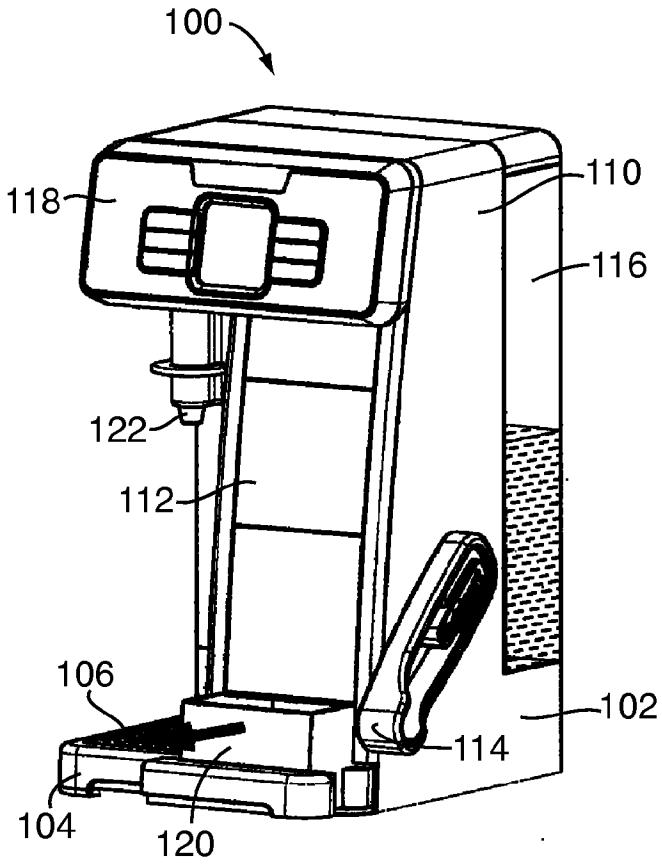

FIG. 25B

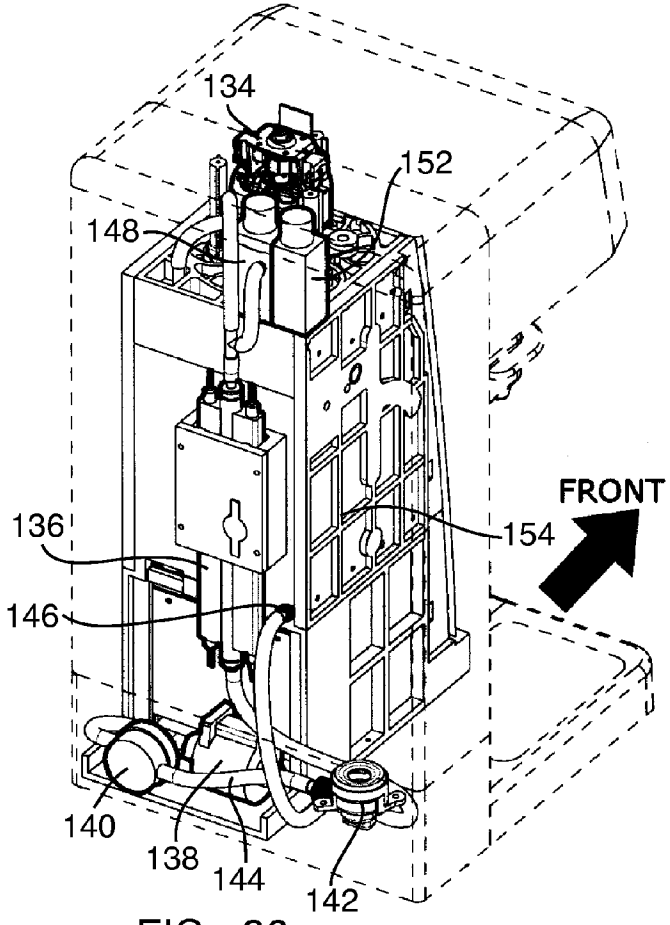
134
152
148
FRONT
154
136
146
140
138
144
142

FIG. 26

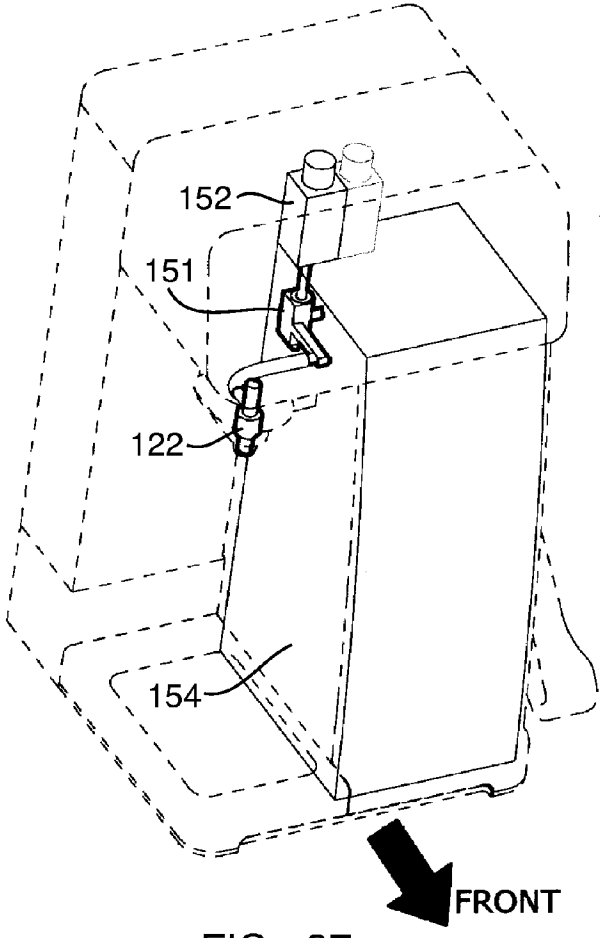
152
151
122
154
FRONT

FIG. 27

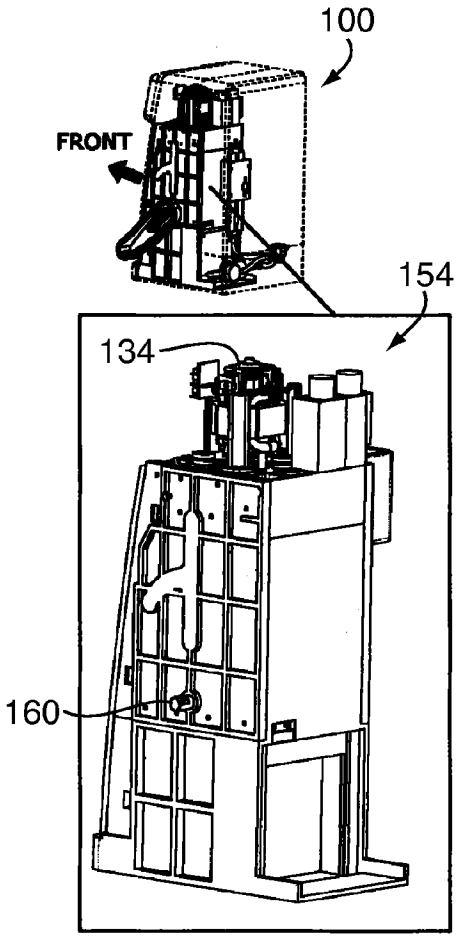

FIG. 28

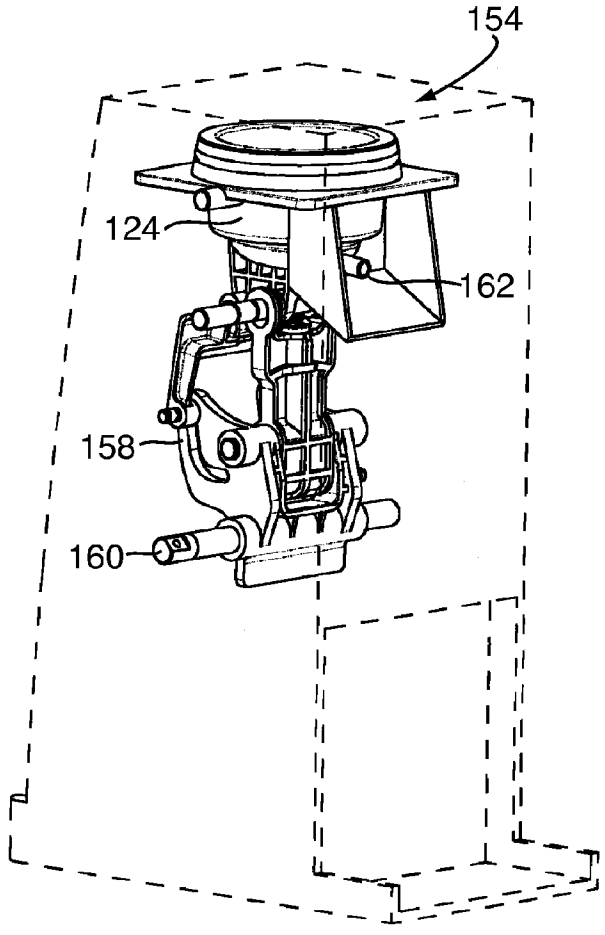

FIG. 29

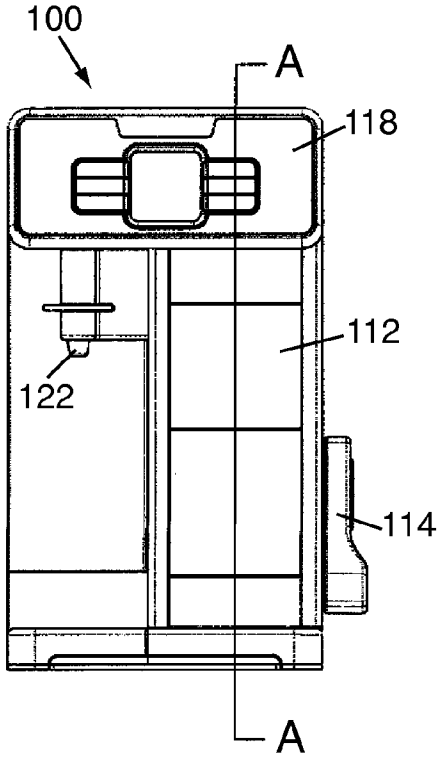

FIG. 30

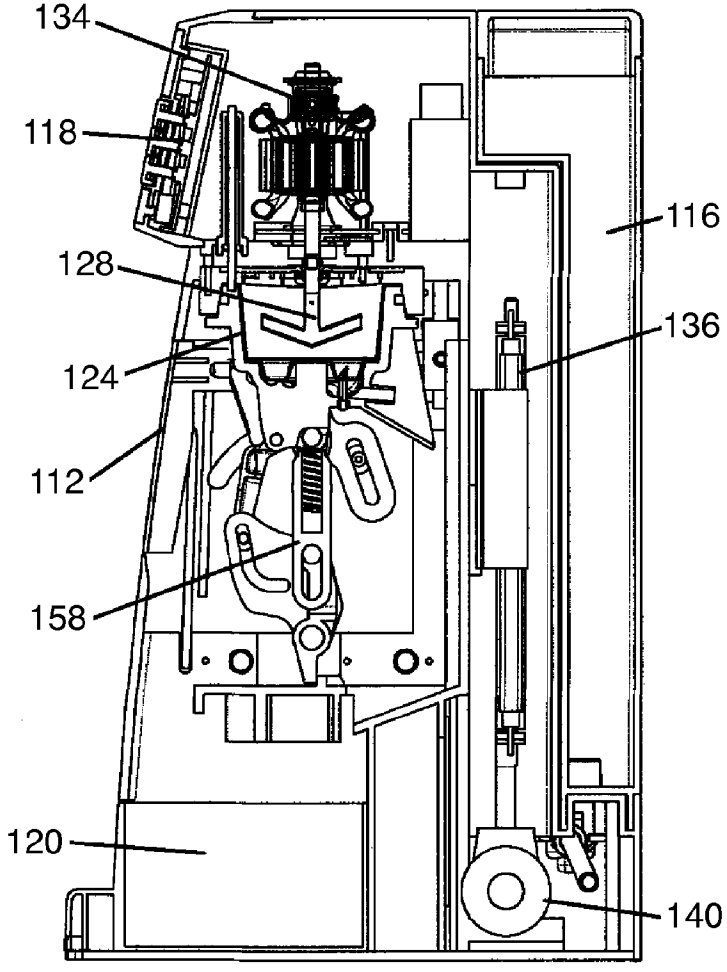

FIG. 31

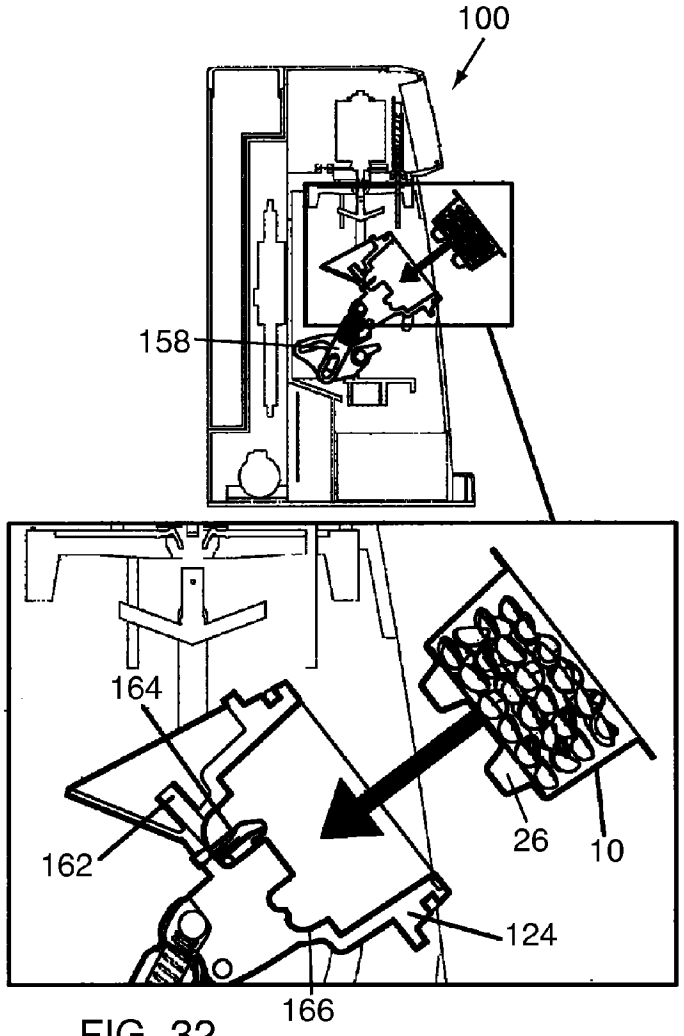

FIG. 32

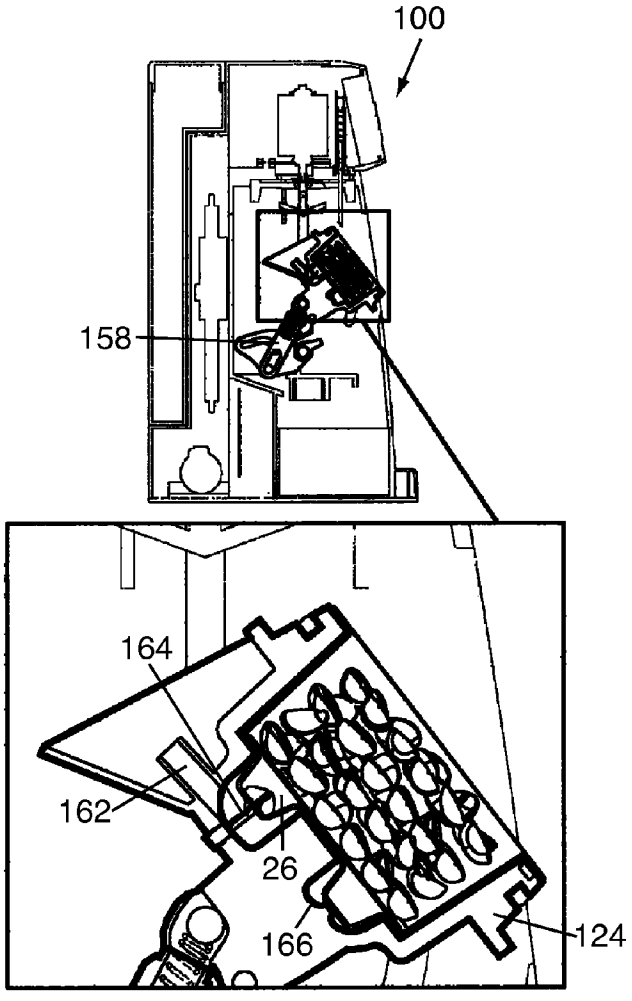

FIG. 33

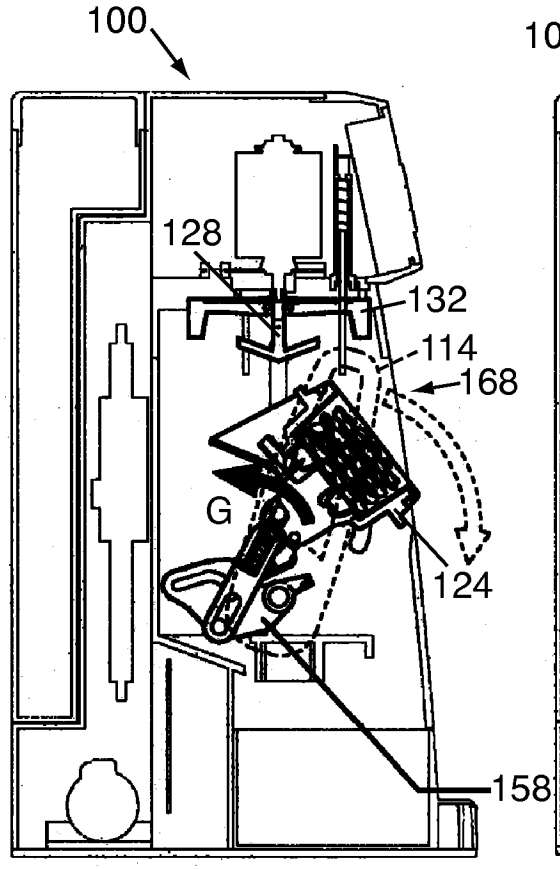

FIG. 34

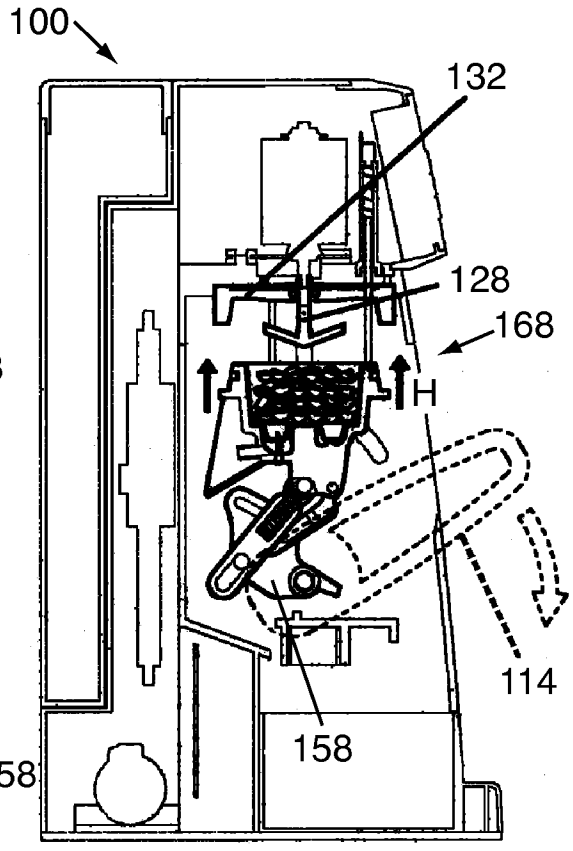

FIG. 35

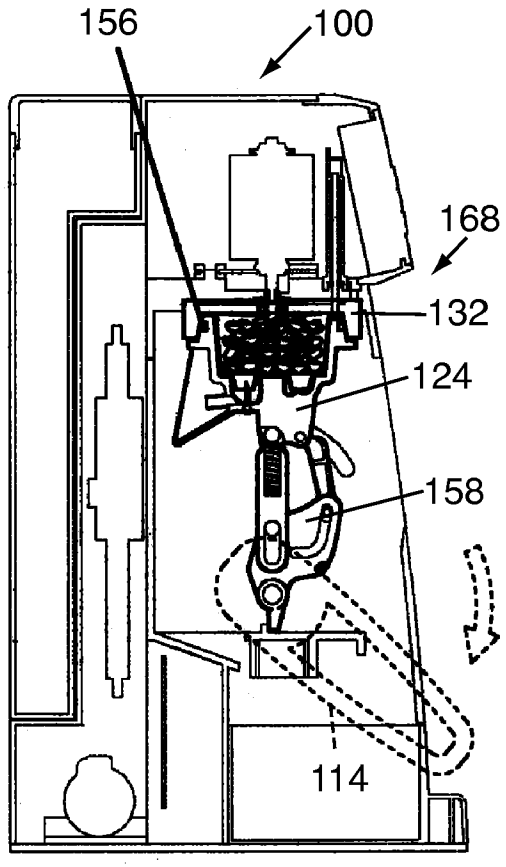

FIG. 36

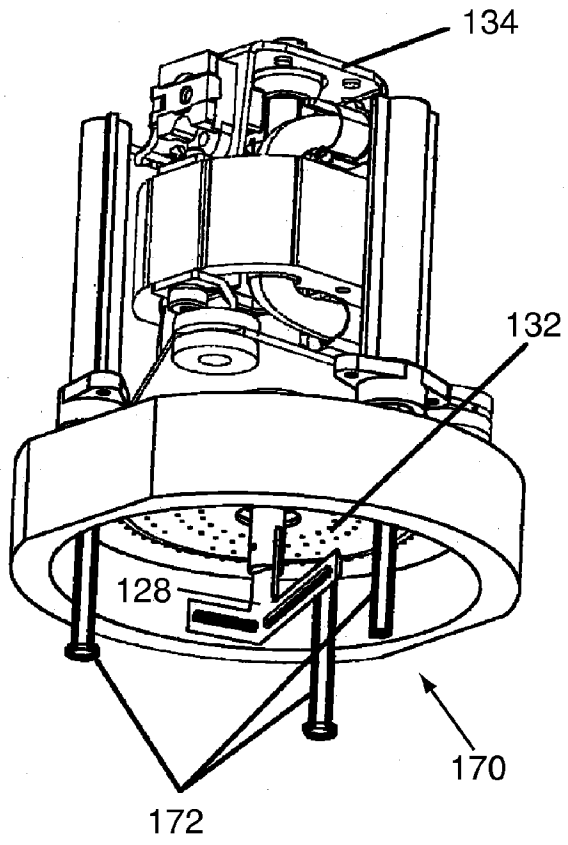

FIG. 37

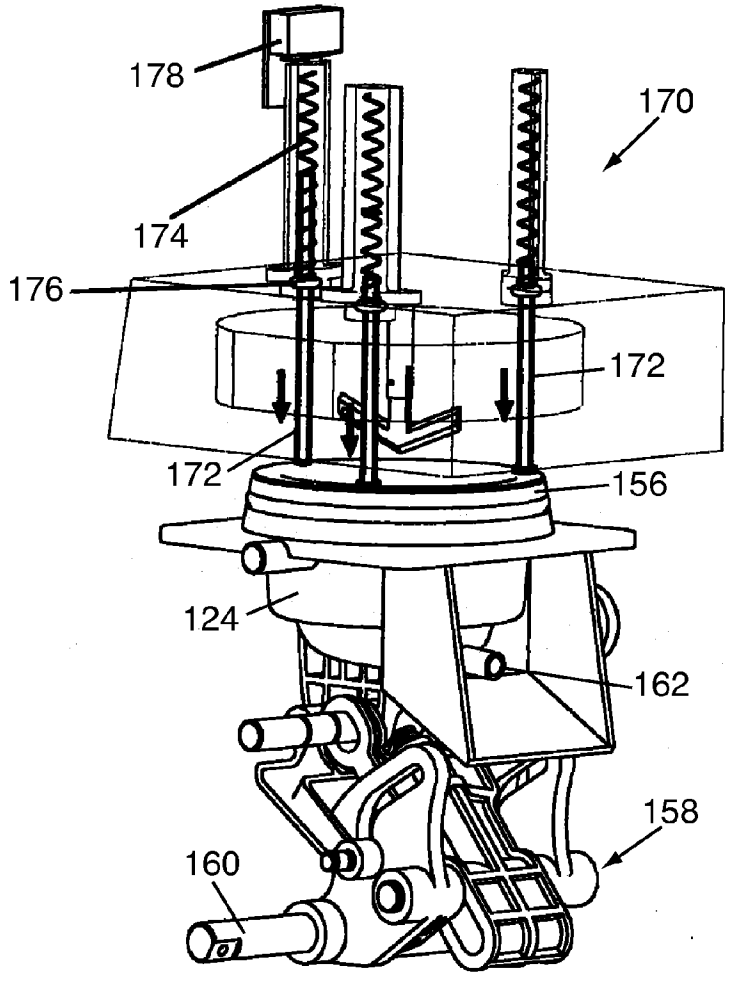

FIG. 38

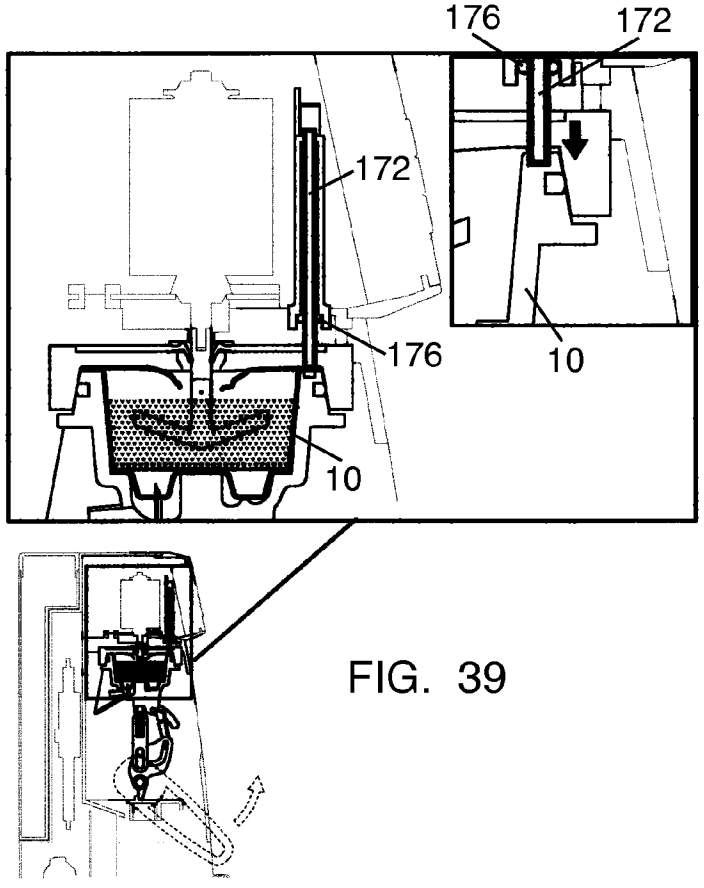

FIG. 39

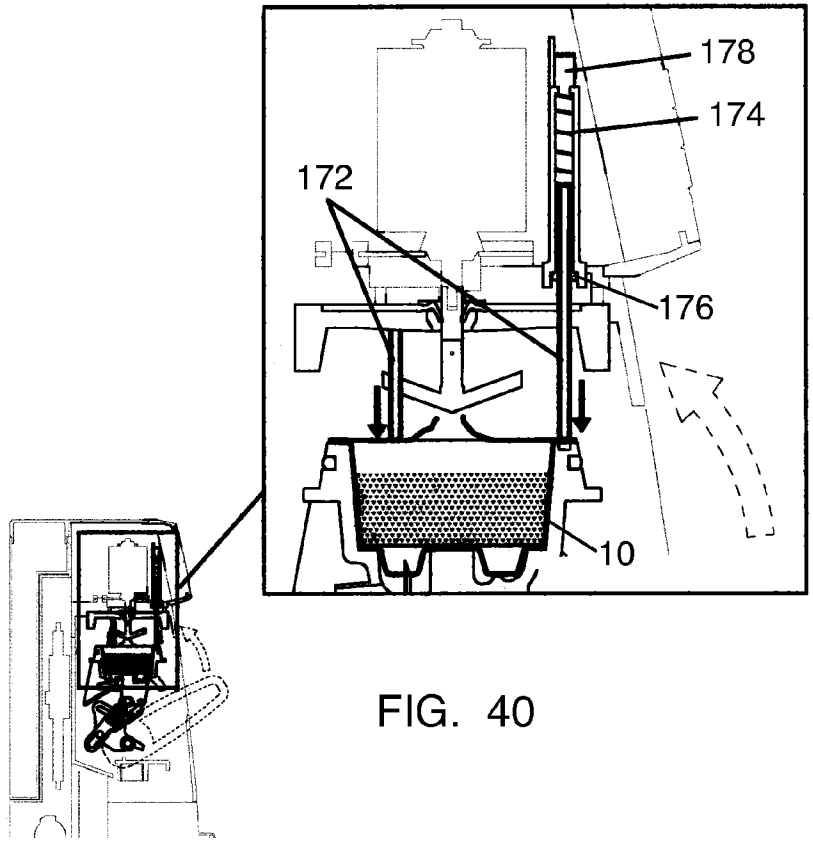

FIG. 40

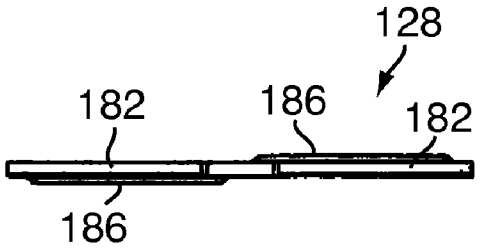

FIG. 42

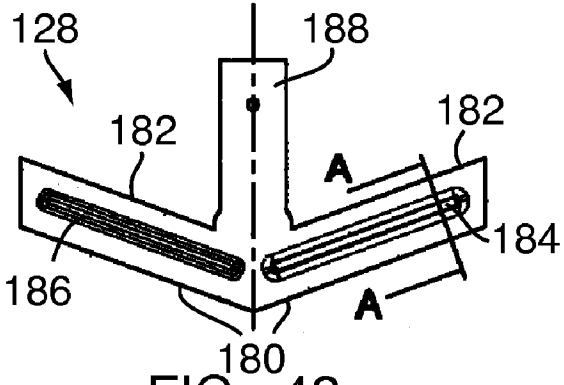

FIG. 43

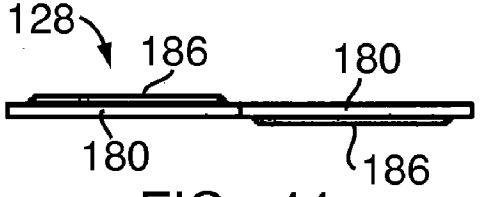

FIG. 44

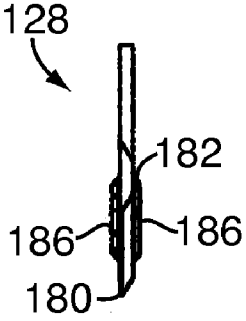

FIG. 45

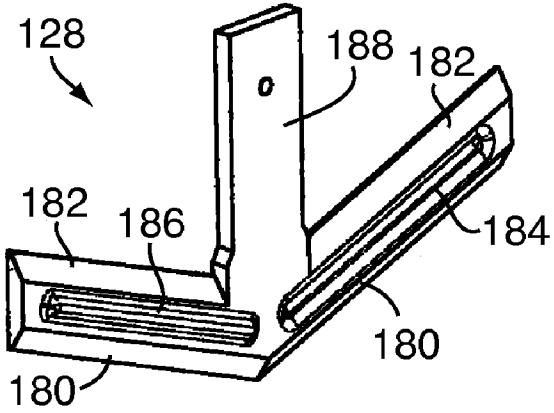

FIG. 41

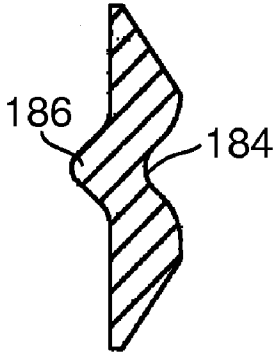

FIG. 46

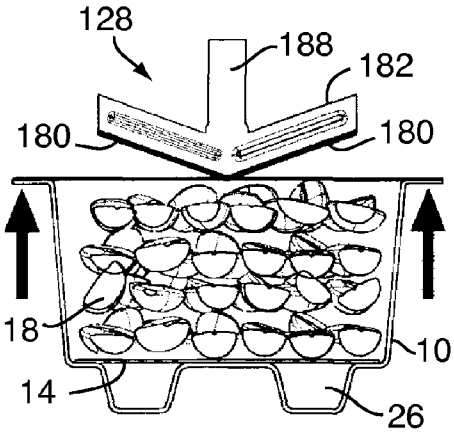

FIG. 47

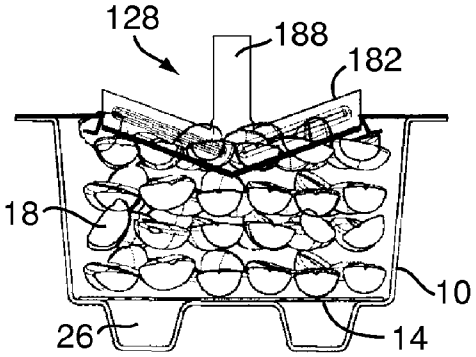

FIG. 48

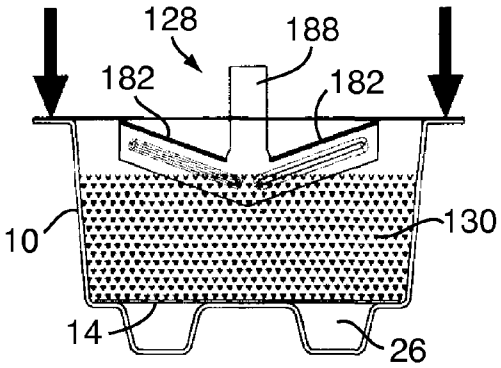

FIG. 49

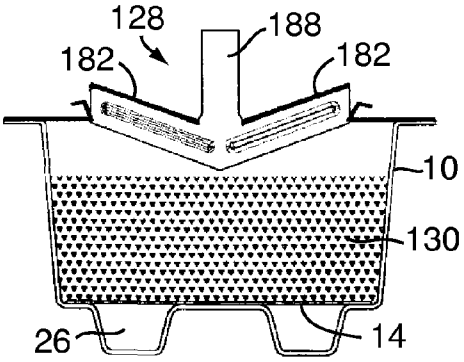

FIG. 50

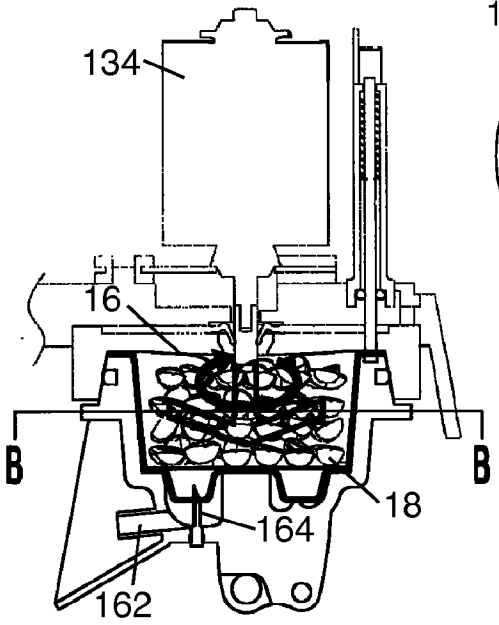

FIG. 51

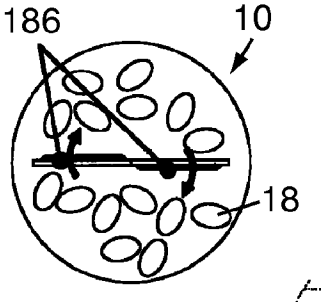

FIG. 52

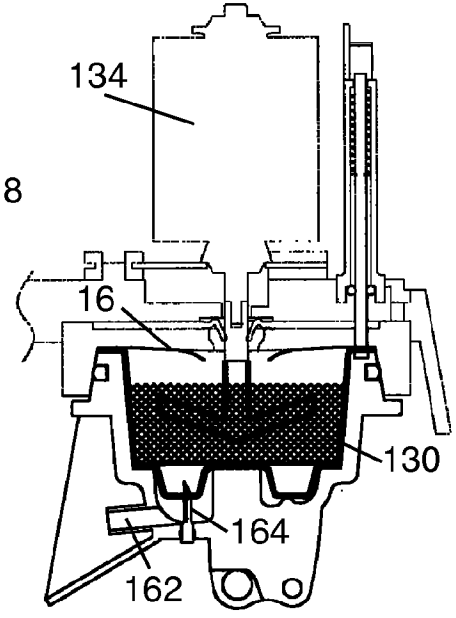

FIG. 53

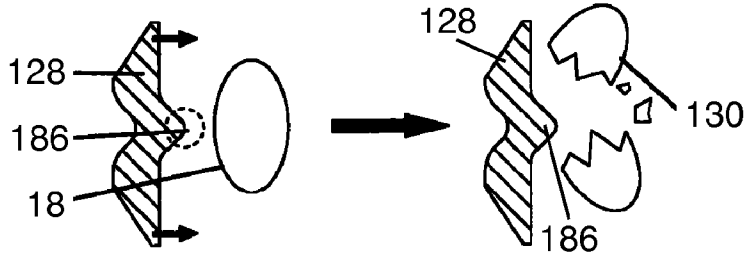

FIG. 54

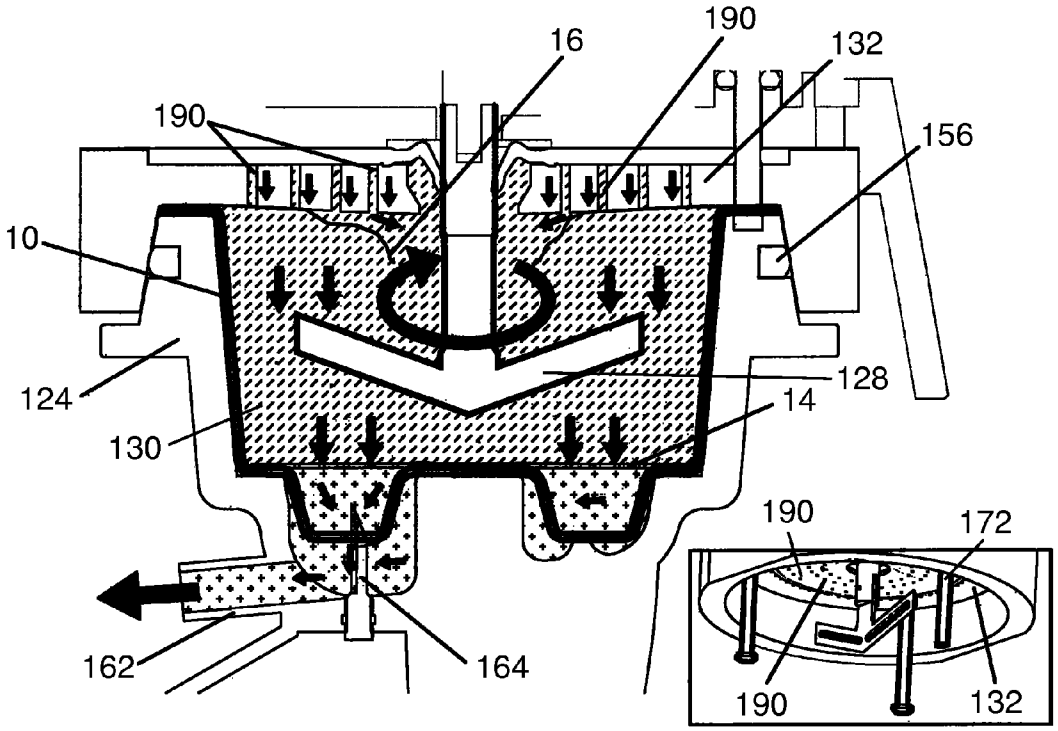

FIG. 55

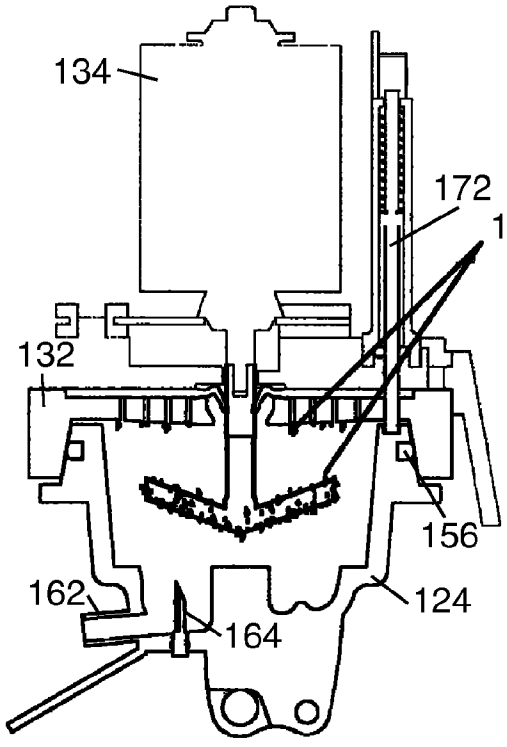

FIG. 56

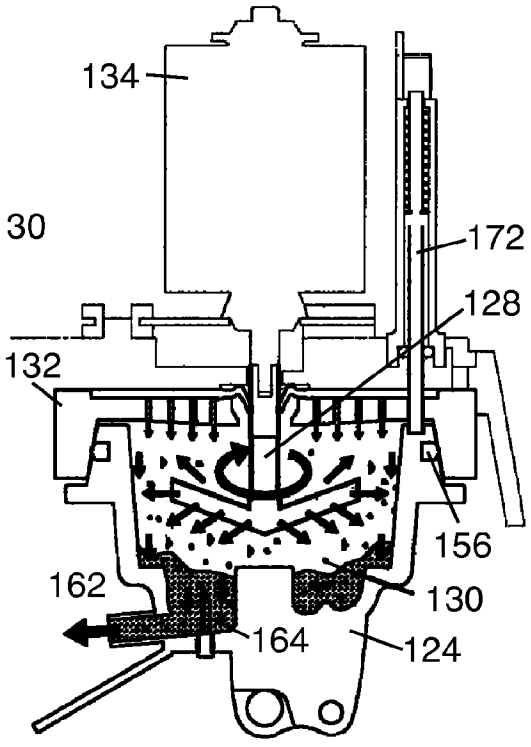

FIG. 57

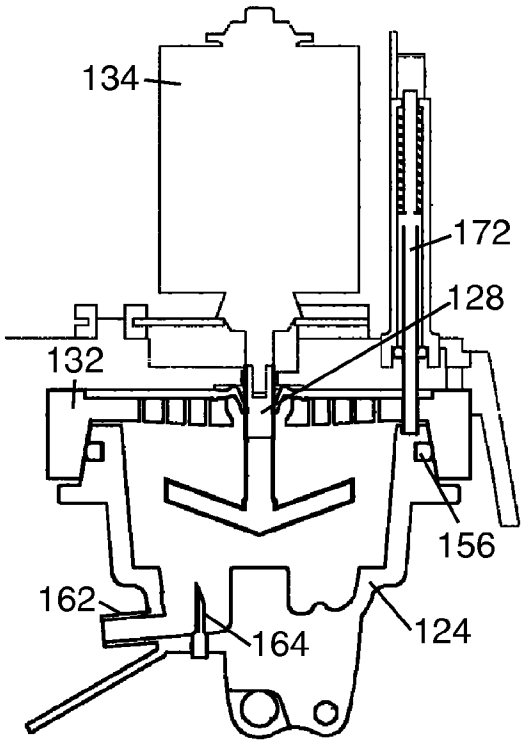

FIG. 58

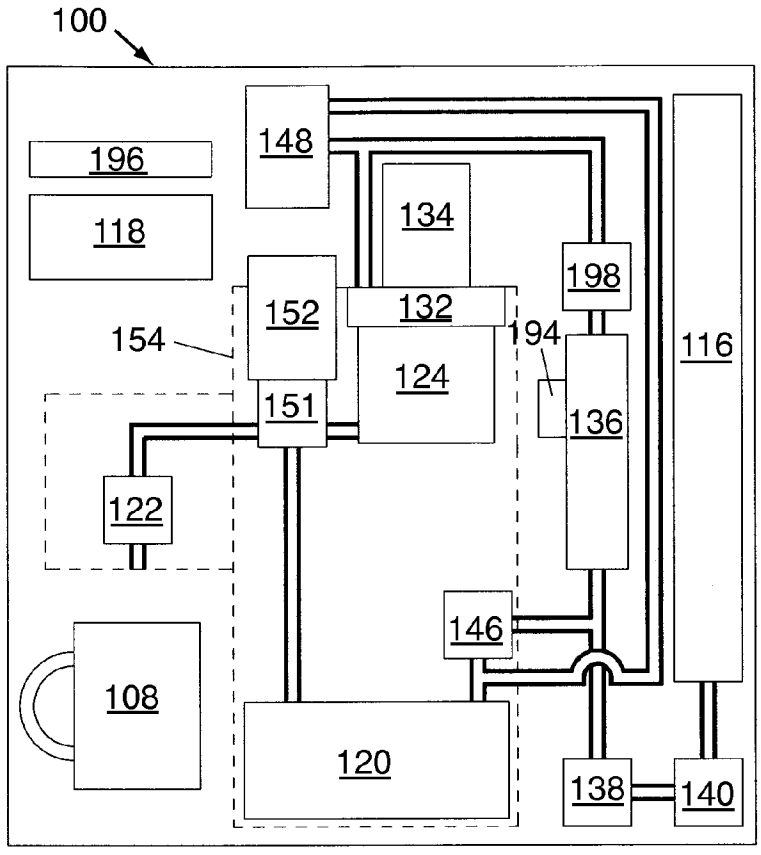
100
196
118
148
134
198
152
132
154
194
124
116
151
136
122
146
108
120
138
140

FIG. 59

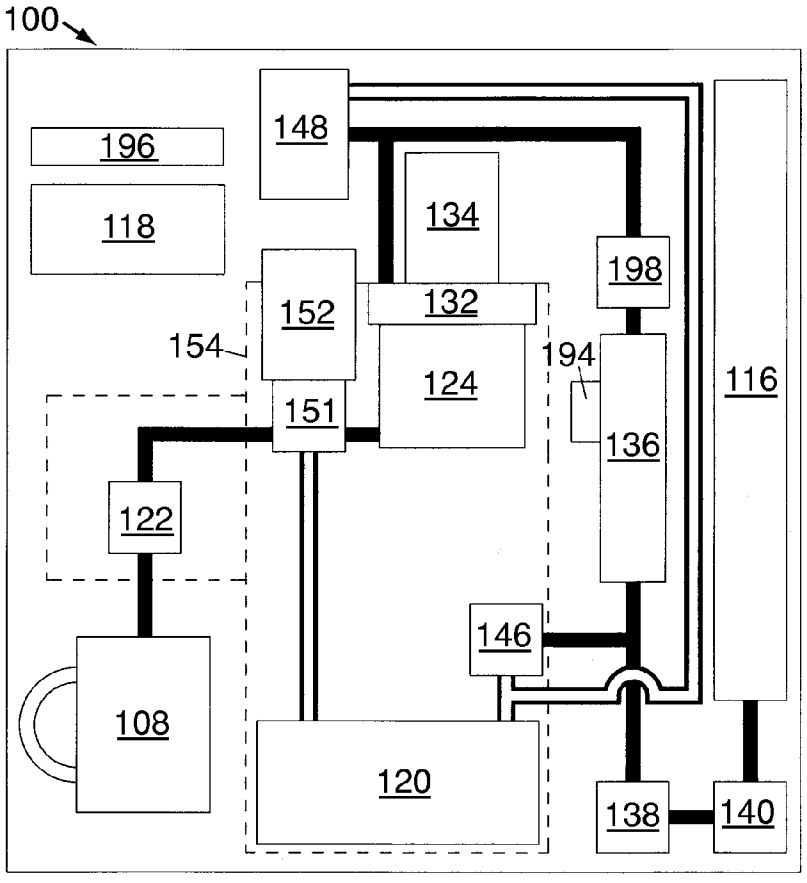
100
196
148
118
134
198
152
132
154
194
124
116
151
136
122
146
108
120
138
140

FIG. 60

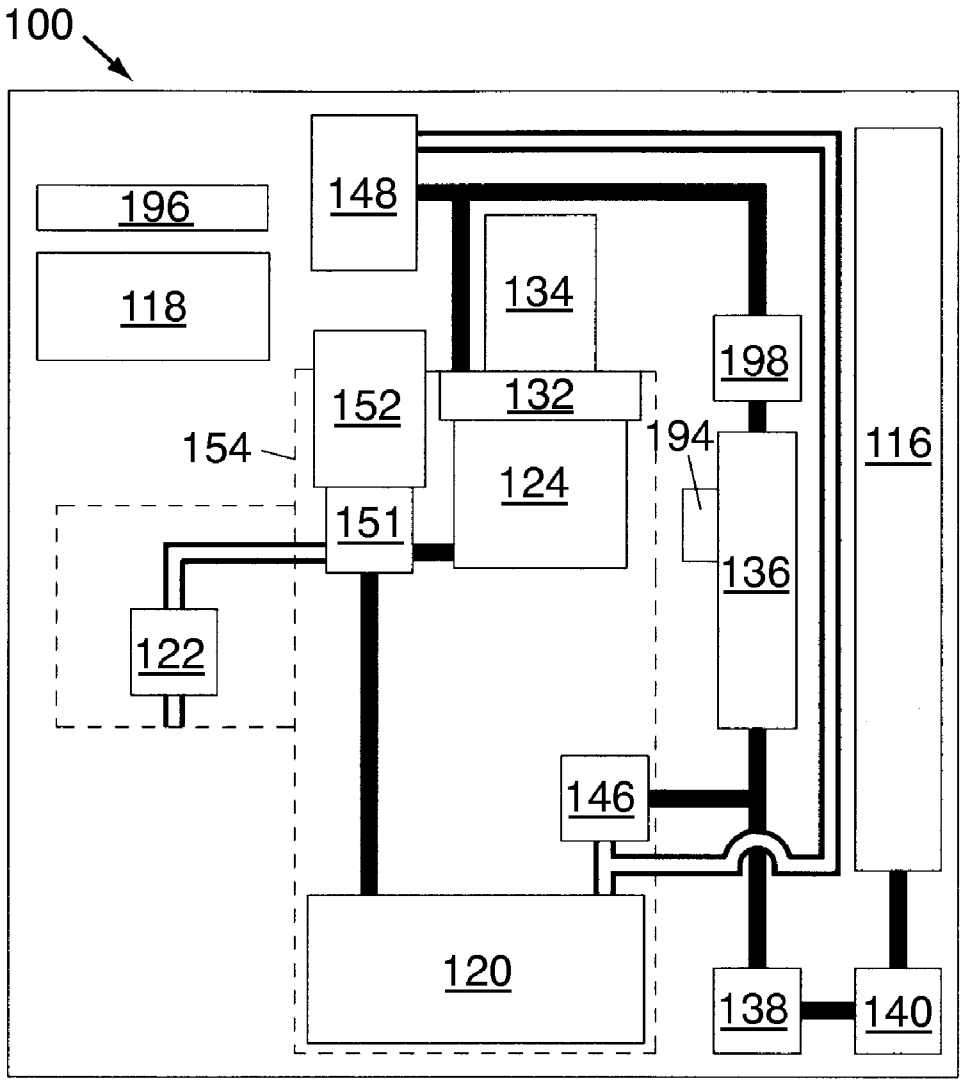
100
196
118
148
134
198
152
132
154
194
116
124
151
136
122
146
120
138
140

FIG. 61

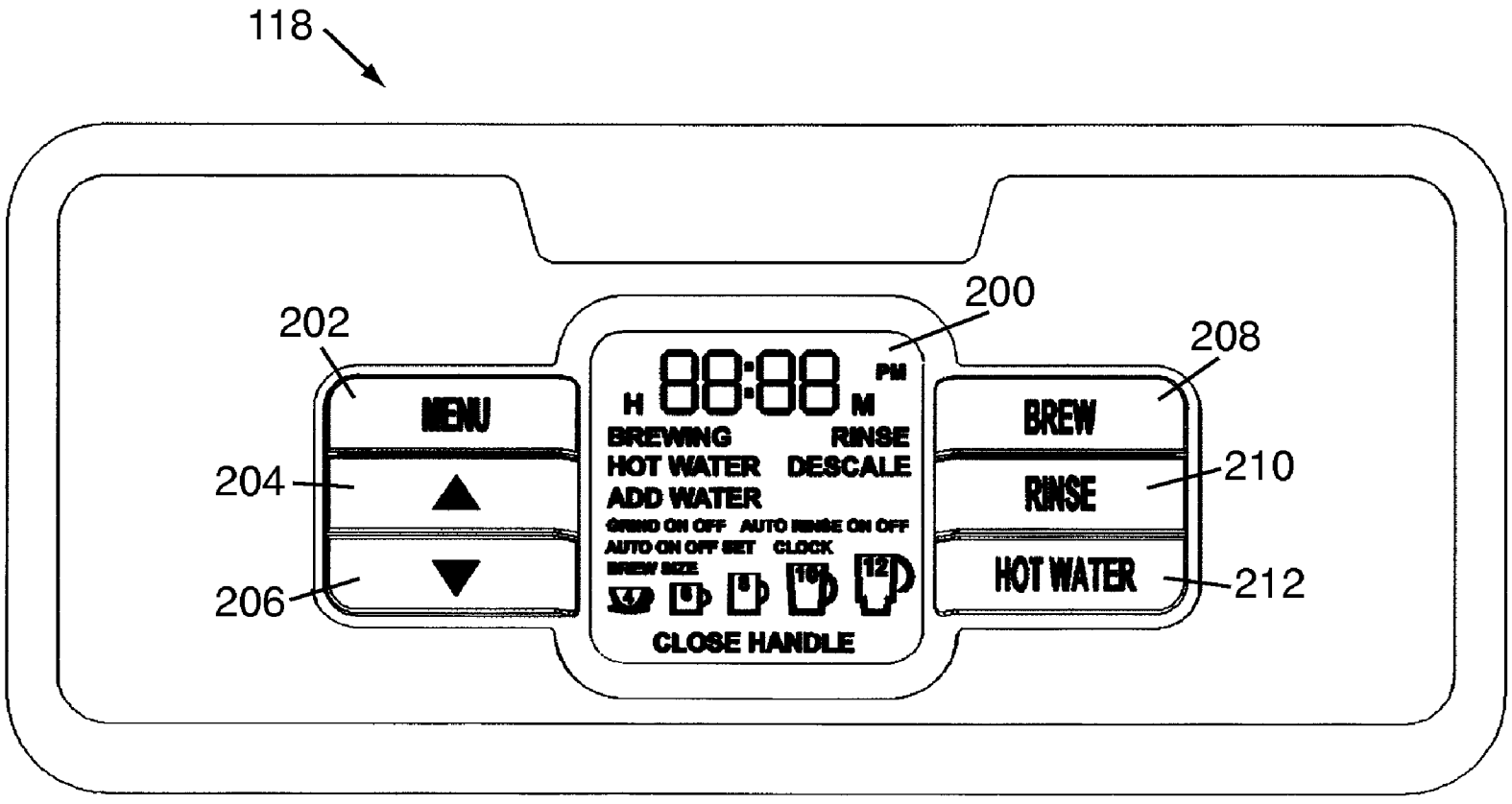
118
200
202
208
204
210
206
212
MENU
BREW
RINSE
HOT WATER
H
M
PM
BREWING
RINSE
HOT WATER
DESCALE
ADD WATER
GRIND ON OFF
AUTO RINSE ON OFF
AUTO ON OFF SET
CLOCK
BREW SIZE
CLOSE HANDLE

FIG. 62

BREWED BEVERAGE APPLIANCE AND METHOD

CROSS-REFERENCE TO RELATED APPLICATIONS

[0001] This application is a continuation-in-part of, and claims the benefit of, U.S. patent application Ser. No. 13/231,021, filed on Sep. 13, 2011, U.S. patent application Ser. No. 13/231,035, filed on Sep. 13, 2011, U.S. patent application Ser. No. 13/230,980, filed on Sep. 13, 2011, and U.S. patent application Ser. No. 13/230,954, filed on Sep. 13, 2011, all of which claim the benefit of U.S. Provisional Application Ser. No. 61/413,744, filed on Nov. 15, 2010, all of the foregoing U.S. Patent Applications and Provisional Patent Applications being herein incorporated by reference in their entireties.

TECHNICAL FIELD

[0002] The present invention relates to brewed beverage appliances and, more particularly, to a brewed beverage appliance adapted to brew coffee from a pre-packaged, disposable container and filter combination.

BACKGROUND OF THE INVENTION

[0003] Various known coffee making appliances involve adding of coffee beans in one of various forms (i.e., ground or unground) to a container that is part of a machine in which heated water is delivered to the container and passes therethrough. The container typically includes a filtering mechanism so that heated water exiting the container is in the form of brewed coffee. Certain appliances require pre-ground coffee beans to be added in the form of "grounds." Other appliances are designed to accept whole coffee beans into a hopper or opening and include mechanisms that grind the beans into a ground form and then complete the brewing process at a separate station. It is sometimes preferred to keep whole beans on hand for making coffee so that the coffee may be ground immediately prior to brewing, as this is believed to produce the freshest tasting coffee beverage. Yet other appliances require use of pods or pre-packaged coffee grounds in a serving-sized filter container to be inserted into the appliance. In such instances, the pre-packaged pods or containers are limited to being filled with ground coffee. Certain pre-packaged containers require placement into a separate filter mechanism in the appliance, while others have built-in filtering mechanisms.

SUMMARY OF THE INVENTION

[0004] It is an object of the present invention to provide a beverage making appliance and related method that include the benefits of brewing coffee from whole beans that are ground immediately before brewing and that are contained in a convenient, disposable, single-serving package.

[0005] These and other objects are achieved by the present invention.

[0006] A beverage appliance includes a housing having a liquid reservoir and a receptacle in the housing dimensioned to receive a container containing at least one drink ingredient having particles of a first size. The receptacle is pivotable from a first position in which the receptacle is angled towards a front of the appliance and a second position in which the receptacle is aligned with a brew head and contacts the brew head. The beverage further includes a mechanism for transforming the particles of the drink ingredient from the first size to a second size within the container, the second size being smaller than the first size.

BRIEF DESCRIPTION OF THE DRAWINGS

[0007] FIG. **1** is an exploded view of a whole coffee bean pre-packaged filter cup according to the present invention.

[0008] FIG. **2** is a perspective top view of the whole coffee bean pre-packaged filter cup of FIG. **1**.

[0009] FIG. **3** is a perspective bottom view of the whole coffee bean pre-packaged filter cup of FIG. **1**.

[0010] FIG. **4** is a top plan view of the whole coffee bean pre-packaged filter cup of FIG. **1**.

[0011] FIG. **5** is a bottom plan view of the whole coffee bean pre-packaged filter cup of FIG. **1**.

[0012] FIG. **6** is a side elevational view of the whole coffee bean pre-packaged filter cup of FIG. **1**.

[0013] FIG. **7** is a side cross-sectional view of the whole coffee bean pre-packaged filter cup of FIG. **1** taken along line A-A of FIG. **6**.

[0014] FIG. **8** is a schematic view of the whole coffee bean pre-packaged filter cup of FIG. **1** illustrating a water flow path through the cup during a brewing mode.

[0015] FIG. **9** is a perspective right side view of a brewed beverage appliance according to the present invention.

[0016] FIG. **10** is a perspective left side view of the brewed beverage appliance of FIG. **9**.

[0017] FIG. **11** is a left side elevational view of the brewed beverage appliance of FIG. **9**.

[0018] FIG. **12** is a front elevational view of the brewed beverage appliance of FIG. **9**.

[0019] FIG. **13** is a right side elevational view of the brewed beverage appliance of FIG. **9**.

[0020] FIG. **14** is a rear elevational view of the brewed beverage appliance of FIG. **9**.

[0021] FIG. **15** is a top plan view of the brewed beverage appliance of FIG. **9**.

[0022] FIG. **16** is a bottom plan view of the brewed beverage appliance of FIG. **9**.

[0023] FIG. **17** is a perspective view of the brewed beverage appliance of FIG. **9** illustrating a ready mode thereof.

[0024] FIG. **18** is a perspective view of the brewed beverage appliance of FIG. **9** illustrating the loading of the whole coffee bean pre-packaged filter cup of FIG. **1**.

[0025] FIG. **19** is a perspective view of the brewed beverage appliance of FIG. **9** illustrating the whole coffee bean pre-packaged filter cup of FIG. **1** in a loading tray.

[0026] FIG. **20** is a perspective view of the brewed beverage appliance of FIG. **9** illustrating the filter cup being moved to a grinding and brewing position.

[0027] FIG. **21** is a perspective view of the brewed beverage appliance of FIG. **9** in a brew-ready state.

[0028] FIG. **22** is a perspective view of the brewed beverage appliance of FIG. **9** in a brewing mode.

[0029] FIG. **23** is a perspective view of the brewed beverage appliance of FIG. **9** subsequent to brewing a beverage.

[0030] FIG. **24** is a perspective view of the brewed beverage appliance of FIG. **9** illustrating the removal of a spent pre-packaged filter cup subsequent to brewing.

[0031] FIG. **25**A is a perspective view of the brewed beverage appliance of FIG. **9** in a cleaning mode.

[0032] FIG. **25**B is a perspective view of the brewed beverage appliance of FIG. **9** in a cleaning mode and illustrates the removal of a drip tray.

[0033] FIG. **26** is rear, left-side perspective view of the brewed beverage appliance of FIG. **9**, illustrating the internal components thereof.

[0034] FIG. **27** is a front, left-side perspective view of the brewed beverage appliance of FIG. **9**, illustrating the internal components thereof.

[0035] FIG. **28** is an enlarged perspective view of a container loading block of the brewed beverage appliance of FIG. **9**.

[0036] FIG. **29** is a perspective view of the container loading block, shown in phantom, and illustrating the internal components thereof.

[0037] FIG. **30** is a front elevational view of the brewed beverage appliance.

[0038] FIG. **31** is a cross-sectional view of the brewed beverage appliance, taken along line A-A of FIG. **30**.

[0039] FIG. **32** is an enlarged, cross-sectional view illustrating the loading of a filter cup into a container holder of the container loading block.

[0040] FIG. **33** is an enlarged, cross-sectional view illustrating a piercing mechanism of the container loading block.

[0041] FIGS. **34-36** are cross-sectional, schematic views of the brewed beverage appliance of FIG. **9** illustrating the loading and positioning of a filter cup.

[0042] FIG. **37** is a perspective view of a container unloading mechanism of the brewed beverage appliance of FIG. **9**.

[0043] FIG. **38** is another perspective view of the container unloading mechanism.

[0044] FIG. **39** is an enlarged, cross-sectional view of the brewed beverage appliance, illustrating operation of the container unloading mechanism.

[0045] FIG. **40** is another enlarged, cross-sectional view of the brewed beverage appliance, illustrating operation of the container unloading mechanism.

[0046] FIG. **41** is a perspective view of a grinding blade assembly for use with the brewed beverage appliance of FIG. **9**, in accordance with the present invention.

[0047] FIG. **42** is a top plan view of the grinding blade assembly of FIG. **41**

[0048] FIG. **43** is a front elevational view of the grinding blade assembly of FIG. **41**.

[0049] FIG. **44** is a bottom plan view of the grinding blade assembly of FIG. **41**.

[0050] FIG. **45** is a left side elevational view of the grinding blade assembly of FIG. **41**.

[0051] FIG. **46** is a cross-sectional view of grinding blade assembly of FIG. **41**, taken along line A-A of FIG. **43**.

[0052] FIG. **47** is a schematic view of a blade assembly and the whole coffee bean pre-packaged filter cup, illustrating insertion of the blade assembly into the cup.

[0053] FIG. **48** is another schematic view of a blade assembly and the whole coffee bean pre-packaged filter cup, illustrating the insertion of the blade assembly into the cup.

[0054] FIG. **49** is a schematic view of a blade assembly and the whole coffee bean pre-packaged filter cup, illustrating retraction of the cup from the blade assembly.

[0055] FIG. **50** is another schematic view of a blade assembly and the whole coffee bean pre-packaged filter cup, illustrating the retraction of the cup from the blade assembly.

[0056] FIG. **51** is an enlarged schematic view of a portion of the brewed beverage appliance of FIG. **1** in a grinding mode.

[0057] FIG. **52** is a cross-sectional view of a portion of the brewed beverage appliance of FIG. **1** in a grinding mode, taken along line B-B of FIG. **52**.

[0058] FIG. **53** is an enlarged schematic view of a portion of the brewed beverage appliance of FIG. **1** subsequent to grinding coffee beans.

[0059] FIG. **54** is an enlarged schematic view of the grinding blade of the brewed beverage appliance of FIG. **1** illustrating the grinding a coffee bean.

[0060] FIG. **55** is an enlarged cross-sectional view of a brewing mechanism of the brewed beverage appliance of FIG. **9**.

[0061] FIG. **56** is a schematic drawing of an auto-rinse mechanism of the brewed beverage appliance of FIG. **9**, illustrating the blade assembly before rinsing.

[0062] FIG. **57** is a schematic drawing of the auto-rinse mechanism of the brewed beverage appliance of FIG. **9**, illustrating the rinsing process.

[0063] FIG. **58** is a schematic drawing of the auto-rinse mechanism of the brewed beverage appliance of FIG. **9**, illustrating the blade assembly after rinsing.

[0064] FIG. **59** is a schematic view of the brewed beverage appliance of FIG. **9**, in a grinding mode.

[0065] FIG. **60** is a schematic view of the brewed beverage appliance of FIG. **9**, in a brewing mode.

[0066] FIG. **61** is a schematic view of the brewed beverage appliance of FIG. **9**, in a rinsing mode.

[0067] FIG. **62** is a plan view of a control panel of the brewed beverage appliance of FIG. **9**.

DETAILED DESCRIPTION OF THE PREFERRED EMBODIMENTS

[0068] Referring to FIGS. **1-8**, a filter cup **10** for use with a brewed beverage appliance according to the present invention includes a cup body **12**, a resilient filter **14** and a cover **16**. The cup body may be formed from plastic or other material known in the art, and is capable of being pierced by a piercing mechanism of a brewed beverage appliance. The filter **14** prevents coffee grounds and other sediment from exiting the cup body **12** during brewing but permits passage of liquid therethrough. Importantly, the filter **14** is resilient such that it is not damaged or destroyed during grinding, as discussed in detail hereinafter. The cover **16** may be formed from aluminum or other material known in the art, and is preferably heat-sealed or otherwise affixed to the top rim of the cup body **12**. A plurality of whole coffee beans **18** are enclosed in the space between the cover **16** and the filter **14**. While FIG. **1** shows coffee beans **18** housed in the filter cup **10**, other types of food and substances, such as tea and the like, may be used in similar fashion to that described herein, without departing from the broader aspects of the present invention.

[0069] As further shown in FIG. **1**, the cup body **12** has an opening **20** at the top thereof, a circumferential sidewall **22** and a floor **24**. As best shown in FIGS. **3** and **6**, the floor **24** has an annular groove **26** for the channeling of a brewed beverage to an exit aperture of the cup (created by a piercing mechanism of a brewed beverage appliance). Importantly, the annular groove **26** is the lowest portion of the cup **10** such that brewed coffee collects in the groove **26** and exits the cup through the exit aperture, as discussed hereinafter.

[0070] FIG. **7** illustrates the cup **10** in a sealed state and containing a plurality of whole coffee beans **18**. As shown therein, the resilient filter **14** is positioned at the bottom of the cup **10**, just above the annular groove **26**. The filter **14** is circular and sized to be closely received by the circumferential sidewall **22** of the cup body at the bottom thereof. As best shown in FIG. **7**, the filter **14** provides a flat surface in the cup

body **12** on top of which coffee bean **18** may rest. Importantly, the resilient filter **14** prevents the coffee beans **18** from falling into the annular groove **26** (which is out of reach of a grinding blade) to facilitate optimal grinding by the grinding blade, as discussed in detail hereinafter. As discussed above, the foil cover **16** seals the filter **14** and whole coffee beans **18** inside the cup body **12**, keeping the coffee beans **18** fresh until use.

[0071] As will be readily appreciated, the prepackaged filter cup **10** is completely sealed on all sides thereof so as to ensure freshness of the coffee beans **18** or other beverage ingredients within the cup **10**. In an embodiment, the cup **10** may be vacuum-sealed to further ensure freshness of the beverage ingredients. In another embodiment, he cup **10** may be stored and transported in a separate sealed package or wrapper for additional freshness and protection. In the preferred embodiment, the filter cup **10** is a pre-packaged, single-use, disposable component. Thus, it is sealed by the cover **16** in an air-tight manner to preserve freshness and flavor and to protect the coffee beans **18** from moisture and contamination.

[0072] As shown in FIG. **8**, and as discussed in detail hereinafter, the floor of the annular groove **26** may be pierced by a needle of a brewed beverage appliance. A blade of the beverage appliance pierces the cover **16** such that water may enter the cup body **12**. The water is then passed through the cup **10** to create brewed coffee, which exist the cup through the aperture created by the needle.

[0073] Referring to FIGS. **9-25**B, a brewed beverage appliance **100** according to an embodiment of the present invention is shown. The appliance **100** is intended to be used in combination with the prepackaged filter cup **10**, disclosed above, in order to brew coffee or other beverage. As shown therein, the appliance **100** is generally rectangular in shape and includes a base **102** and a drip tray **104** removably received by the base **102**. The drip tray **104** has a slotted or grated top surface **106** that is adapted to support a container, such as a coffee cup. As will be readily appreciated, the grated surface **106** permits liquid that may be spilled from the cup **108** during operation to pass through the surface **106** and collect in the drip tray **104**, for easy cleanup.

[0074] A housing **110** is located above and is supported by the base **102**. In an embodiment, the housing **110** may be integrally formed with the base **102**. The housing includes a sliding access door **112** that allows access to a filter cup container holder or loading tray **124** for securing and positioning a prepackaged filter cup **10**. A locking handle **114** is pivotally mounted to the housing **110** for operation, as described below. As further shown in FIGS. **9** and **10**, a water reservoir **116** is attached to, supported by, and otherwise forms a part of the housing **110**. In an embodiment, the water reservoir **116** may be removably or permanently affixed to the housing **110**. The housing **110** also includes a control panel **118** for controlling operation of the appliance **100**, as discussed hereinafter. As best shown in FIG. **10**, the base **102** also includes a drain tray **120** slidably received therein for receiving water from a cleaning operation of the appliance **100**.

[0075] With further reference to FIGS. **9-25**B, the appliance **100** includes a brew spout **122** from which a brewed beverage is dispensed. In an embodiment, the brew spout **122** is adjustable in height, as discussed hereinafter.

[0076] Operation of the appliance **100** will now be described with specific reference to FIGS. **17-25**B. First, the water reservoir **116** is filled with water. A user then selects the desired coffee/beverage settings from the control panel **118**. Settings may include selectable options such as coffee strength and serving size, timer setting, automatic brew, etc. The handle **114** is then moved upwardly in the direction of arrow A, as shown in FIG. **17**, which causes the sliding access door **112** to move downward in the direction of arrow B to expose the loading tray **124**. When the handle **114** is in the "up" position and the sliding access door **112** is retracted, the loading tray **124** is pivoted and angled toward the front of the appliance **100** so as to allow a user to easily insert a prepackaged filter cup **10**, as shown in FIG. **18**. A user may then place a coffee cup **108** on the drip tray **104**, directly beneath the brew spout **122**.

[0077] Once a prepackaged filter cup **10** is positioned in the loading tray **124**, as shown in FIG. **19**, the locking handle **114** is then moved downward in the direction of arrow C, as shown in FIG. **20**. As shown therein, this causes sliding access door **112** to move upwards in the direction of arrow D, to block access to the interior components of the appliance **100**, and also moves the filter cup **10** into a grind and brew position, as discussed hereinafter.

[0078] A user then selects the desired brew settings using the buttons **126** on the LCD control panel **118**, and presses a "BREW" button to initiate the grinding and brewing processes. During the grinding process, the coffee beans **20** in the filter cup **10** are ground by a grinding blade assembly **128** that is received within the cup **10** so that the beans **20** are transformed into coffee grounds **130**. After the whole coffee beans **18** within the cup **10** are transformed into coffee grounds **130**, the brewing process will automatically commence. During the brewing process, heated water is delivered into the cup **10** from a brew or shower head **132**. The heated water passes through the coffee grounds **130**, exits through the bottom of the filter cup **10** (see FIG. **8**), and is emitted from the brew spout **122** into the coffee mug **108** positioned on the tray **104**. The coffee mug **108** may then be removed from the tray **104** and is ready to enjoy.

[0079] To remove a used filter cup **10**, the locking handle **114** is once again moved into the "up" position, as represented by arrow E in FIG. **23**, which causes the loading tray **124** to retract from the grind/brew position and rotate outwardly towards a user, and also causes the access door **112** to open. A user then manually removes the spend filter cup **10** and disposes of the same.

[0080] With reference to FIGS. **25**A and **25**B, once the filter cup **10** is discarded, a user can again move the locking handle **114** to its downward position to close the access door **114**. Importantly, the appliance **100** contains control circuitry, which will automatically initiate a cleaning process when the handle is moved to the downward position subsequent to brewing. During the cleaning process, water is dispensed from the brew/shower head **132** to rinse remaining coffee grounds from the grinding blade assembly **128** and the internal brewing area. This water is then collected in the drain tray **120** which can be emptied, as necessary, by sliding it out from the base **102** in the direction of arrow F, as shown in FIG. **25**B. In an embodiment, the blade assembly **128** may rotate during application of water to facilitate cleaning. At this point, the appliance **100** is in a standby mode and is ready to brew another beverage.

[0081] In yet another embodiment, a cleaning operation may include running a brewing cycle without actually inserting a filter cup **10**. In this embodiment, the handle **114** may be moved downward to begin the cycle such that heated water is

passed over the blade assembly **128** to clean the same. Alternatively, a button on the control panel **118** may be depressed to initiate the cleaning cycle.

[0082] FIGS. **26** and **27** illustrate certain internal components of the appliance **100**. With reference to FIG. **26**, the appliance **100** includes a grinder motor **134** having a rotating output shaft that drives the grinding blade assembly **128**. The appliance **100** also includes a heater **136** of the type known in the art that functions to heat water from the water reservoir **116** for use in the brewing process, a pump **138** that draws water from the reservoir **116** via the heater **136** and pumps the water to the shower head **132** for infusion into the filter cup **10**, and a flow meter **140** which measures the flow of water from the tank **116**. The flow meter **140** may be of the type known in the art and is electrically coupled to the printed circuit board **196** of the control panel **118**. In this manner, signals representing the flow rate of water from the tank **116** are relayed to the control panel **118** so that the correct amount of brewed coffee is dispensed from the spout **122** into a user's coffee mug **108**.

[0083] As further shown in FIG. **26**, a water inlet **142** connects to the water tank **116** and provides a passage from the tank **116** to a water conduit **144**. A safety valve **146** is provided which functions to release internal pressure when it reaches a predetermined point. A pressure release valve **148** is also provided. As shown in FIGS. **26** and **27**, the appliance **100** also includes a three-way valve **151** and solenoid **152**. The three-way valve **151** is triggered by the solenoid **152** to control the flow path from the coffee outlet at the loading tray **124** to either the spout **122** or the drain tray **120**. FIG. **26** also shows a container loading block **154** which houses the loading tray **124**, as discussed hereinafter.

[0084] Turning now to FIGS. **28** and **29**, detail views of the container loading block **154** are shown. The container loading block **154** includes the container loading tray **124** defining a generally cylindrical recess adapted to received a prepackaged filter cup **10**. A pin or needle (not shown in FIGS. **28** and **29**) is provided adjacent the bottom of the cylindrical recess to pierce the bottom of a filter cup **10**. A seal ring **156** is configured adjacent the top rim of the cylindrical recess which provides an air-tight and water-tight seal between the loading tray **124** and brew/shower head **132** during brewing, as discussed hereinafter. As best shown in FIG. **29**, the container loading block **154** further includes a supporting hinge set **158** which allows for vertical and rotational movement of the loading tray **124**, allows the loading tray **124** to be moved into registration with the brew head, and which engages the sliding access door **112** to provide movement thereof upon movement of the handle **114** between its up and down positions. A handle shaft **160** extends outwards from a lower portion of the hinge set **158** and is adapted to receive a complimentary mating portion of the handle **114** in fixed relation. As will be readily appreciated, rotation of the locking handle **114**, and thus handle shaft **160**, controls movement (upwards, downwards and pivoting movement) of the loading tray **124**. A coffee outlet **162** is also provided on the container loading block **154**. The coffee outlet **162** is in fluid communication with the pin that pierces the filter cup **10** and directs brewed coffee/water to the three-way valve **151**, and ultimately to either the drain tray **120** (during a cleaning/rinsing mode) or to the spout **122** for dispensing (during a brewing mode).

[0085] Turning now to FIGS. **32** and **33**, the piercing mechanism for piercing a hole in the bottom of the filter cup **10** is shown. As best shown in FIG. **32**, the piercing mechanism is in the form of a hollow pin **164** or needle built in at the bottom of the loading tray **24**. The bottom of the loading tray **124** includes an annular recess **166** dimensioned to receive the annular groove **26** of a filter cup. The hollow interior of the pin **164** is in fluid communication with the coffee outlet **162** so a to provide a flow path from the interior of the filter cup **10** to the spout **122**, as discussed hereinafter. As shown in FIGS. **32** and **33**, when a filter cup **10** is inserted into the loading tray **124**, the pin **164** pierces the floor **24** of the filter cup **10** and enters the annular groove **26**. Importantly, the filter cup design, including the annular groove, the loading tray design, including the annular recess **166**, and pin length are such that the pin **164** will not pierce the filter cup **10** very deeply in order to avoid piercing the resilient filter **14**. During brewing, however, the internal pressure within the filter cup **10** will build up and cause the annular groove **26** of the filter cup to expand downward, causing the pin **164** to reach an optimum piercing depth within the filter cup **10**, whereby an aperture in the needle is exposed to the interior of the filter cup **10** so that brewed coffee may flow from the filter cup **10**, through the pin **164** and to the coffee outlet **162**. As discussed above, the coffee outlet **162** is in fluid communication with the three-way valve **151** so that coffee/liquid can be selectively directed to either the coffee spout **122** (in a brewing mode) or the drain tray **120** (in a cleaning/rinsing mode).

[0086] FIGS. **34-36** illustrate a container loading mechanism **168** which is housed within the container loading block **154**. The container loading mechanism **168** is comprised of the loading tray **124** and hinge set **158**, handle shaft **160** and handle **114**. When the locking handle **114** is rotated downwardly, the loading tray **124** rotates inward in the direction of arrow G, as shown in FIG. **34**, until the top of the loading tray **124** is in line with the brew/shower head **132**, as shown in FIG. **34**. Upon further downward rotation of the locking handle **114**, the loading tray **124** translates upward, in the direction of arrow H, towards the brew/shower head **132** and the blade assembly **128** until the blade assembly **128** pierces the cover **16** of the filter cup **10**. As the handle **114** is moved to its fully downward position, the seal ring **156** is pressed against the underside of the brew/shower head **132**, thereby creating an air and liquid tight seal. Brewing may then be commenced.

[0087] FIGS. **37** and **38** illustrate a container unloading mechanism **170**. As shown therein, the mechanism **170** includes a plurality of push rods **172** that extend through the brew/shower head **132** and are positioned so as to contact the rim of the filter cup **10** (or the seal ring **156** when no filter cup **10** is present) when the loading tray **124** is in the brew position. Each of the push rods **172** is fitted with a coil spring **174**, or the like, and a rod seal ring **176**. In the preferred embodiment there are three push rods, although less than or more than three may be utilized without departing from the broader aspects of the present invention.

[0088] When the loading tray **124** and filter cup **10** are pushed up against the shower head **132** during loading, the filter cup **10** causes the spring biased push rods **172** to retract. In this position, the push rods **172** exert a downward force on the filter cup **10** due to the bias of the coil springs **174**. FIG. **39** shows the position of the push rods **172** in the loaded/brew position (before the filter cup **10** is unloaded). Subsequent to brewing, when the handle **114** is moved downward, the loading tray **124** retracts from the shower head **132** and the bias of the push rods **172** pushes against the rim of the used filter cup **10** to ensure that the filter cup **10** retracts from the shower

head **132** with the loading tray **124** (without the bias force of the push rods **172**, it is possible that the filter cup **10** may stick to the shower head **132**). FIG. **40** illustrates the position of the push rods **172** during unloading of the filter cup **10**.

[0089] In an embodiment, one of the push rods **172** may be configured with a sensor **178** electrically coupled to the PCB **196** of the control panel **118**. The sensor **178** is configured to detect whether or not a filter cup **10** is present and to relay feedback signals to the control panel **118** regarding the same. In particular, the sensor **178** is configured to detect a distance of movement of one of the push rods **172** when the loading tray **124** is moved into the brew position. Depending on the distance of movement, the sensor **178** can detect whether or not a filter cup **10** is present. This is then relayed to the PCB **196**.

[0090] Various views of the grinding blade **128** for grinding the whole coffee beans are shown in FIGS. **41-46**. As shown therein, the blade **128** has a V-shaped configuration. Importantly, the blade **128** has insert cutting edges **180** so that the cover **16** of a filter cup **10** can be pierced when the cup **10** is raised into registration with the shower head **132** upon downwards movement of the handle **114**. The top of the blade also includes upward facing extract cutting edges **182** for cutting through the cover **16** when the filter cup **10** is lowered away from the blade **128** subsequent to brewing, upon upwards movement of the handle **114**. Each leg of the "V" is also formed with an opposed recess **184** and raised ridge **186** to facilitate grinding of the coffee beans **18**, as described hereinafter. The blade **128** also includes a flat neck **188** for connection to the output shaft of the grinding motor **134**. In such an embodiment, the blade **128** may be removable for replacement and more thorough cleaning. In an alternative embodiment, the blade **128** is integrally formed or otherwise fixedly secured to the output shaft of the motor **134**. As will be readily appreciated, the slim profile of the blade **128** puts cuts a slot a minimal width in the cover **16** to prevent coffee grounds **130** from being thrown out of the cup **10** during grinding.

[0091] FIG. **47** is an enlarged, detail view illustrating a filter cup **10** being raised toward the blade **128** and FIG. **48** illustrates the blade **128**, by way of the insert cutting edges **180**, piercing the cover **16** of the cup **10**. In both FIGS. **47** and **48** the coffee beans **18** in the cup **10** are not yet ground. After grinding, the beans **18** have been transformed into ground coffee **130**. Brewing occurs, as described above, and the cup **10** is then lowered as shown in FIGS. **49** and **50** such that the extract cutting edges **182** of the blade **128** again pierce the cover **16**, if necessary, to facilitate removal of the cup **10** from the blade **128**.

[0092] Referring now to FIGS. **51-53**, the actual grinding process is illustrated. Upon actuation of the grinding motor **134**, the grinding blade **128** rotates at a frequency sufficient to grind the whole coffee beans **18** in the filter cup **10** to transform the coffee beans **18** from whole beans, as shown in FIG. **51**, into grinds **130**, as shown in FIG. **53**. In particular, the blade **128** is rotated in a direction (see FIG. **52**) that causes the ridge **186** on the blade **166** to strike/impact the coffee beans **18**, as shown in FIG. **54**, to cause them to split. Over time, numerous impacts from the blade itself, and most importantly, by the ridges **186**, as shown in FIG. **54**, gradually reduce the size of the coffee beans to fine grounds sufficient for brewing.

[0093] In an embodiment, the blade **128** may continue to rotate at a predetermined frequency during the brewing process, i.e., during the time during which hot water is passed through the cup **10**. The frequency of rotation during brewing may be the same as, or different from, the frequency utilized to grind the coffee beans **18**. In other embodiments, the blade **128** may be utilized to stir drink ingredients during brewing, such as to facilitate dissolution of drink ingredients into the water passing through the cup **10** (e.g., when utilizing iced tea drink ingredients in place of whole coffee beans). As will be readily appreciated, stirring the drink ingredients/coffee beans within the cup **10** while brewing may produce a better tasting beverage. In particular, stirring during brewing may improve the contact between the coffee grounds **130** and the hot water, which may improve coffee quality and/or concentration.

[0094] Turning now to FIG. **55**, operation of the brewing mechanism is illustrated. As shown therein, water from the water tank **116** is heated by the heater **136** and pumped by the pump **138** to the shower/brew head **132**. The brew head **132** includes a plurality of small apertures **190** through which the heated water passes before entering the filter cup **10** through the hole created by the grinding blade **128**. Notably, the numerous apertures **190** deliver water evenly to the top of the filter cup **10**, which helps to minimize the amount of coffee grounds **130** at the brew head and keeps the cover **16** clean after the brewing process. The heated water fills up the filter cup **10**. When the filter cup **10** is full with heated water, pressure is built up within the container (as a the filter **14** limits flow). As a result, pressurized brewing occurs within the filter cup **10**. In an embodiment, as discussed above, the blade **128** may rotate during brewing to facilitate contact between the heated water and the coffee grounds **130**, thereby improving coffee qualify. The brewed coffee then passes through the filter **14** into the annular groove **26** of the cup **10**, and through the hollow needle **164** to the coffee outlet **162**. From the coffee outlet **162**, the brewed coffee passes through the three-way valve **151** and to the coffee spout **122** for dispensing into a coffee cup **108**.

[0095] In an embodiment, near the end of the brewing cycle, the pump **138** will stop first so that the heater **136** further heats up the water to produce stem. This steam travels through the system to push the remaining coffee out of the filter cup **10**. As will be readily appreciated, this stem burst removes excess water from the coffee grounds **130** within the filter cup **10**, thereby ensuring an easy and mess-free disposal and cleanup.

[0096] FIGS. **56-58** illustrate an auto-rinsing mechanism which is automatically initiated once brewing is completed. Once a filter cup **10** is removed by the user after the brewing process, coffee grounds **130** may remain on the grinding blade **128** or the brew head **132**, as shown in FIG. **56**. When a user pulls down on the locking handle **114** after removing the spent filter cup **10**, the sliding door **112** is closed, blocking access to the brew head **132** and loading tray **124**. The control circuitry of the control panel **118** will then initiate the rinsing process. During rinsing, water will be pumped from the reservoir **116** by the pump **138** and heated by the heater **136**. The hot water will then exit through the shower/brew head **132** to rinse/cleanse the brew head **132** and blade assembly **128** of remaining coffee grounds **130**. In an embodiment, the blade **128** will rotate during rinsing to facilitate the removal of coffee grounds **130** from the blade, as shown in FIG. **57**. Steam will then be generated in the manner described above and delivered to the loading tray **124** to flush the remaining rinsing water from the loading tray **124** and to the coffee outlet **162**. During, or immediately prior to the rinsing pro-

cess, the solenoid **152** controls the three-way valve **151** so that the rinsing water and coffee grounds **130** carried therein are directed to the drain tray **120** instead of the spout **122**. At this point, the loading tray **124**, blade **128** and brew head **132** are free from coffee grounds **130** and the appliance is ready for another brewing cycle, as shown in FIG. **58**. A notification on the control panel **118** may remind a user to empty the drain tray **120** after a pre-determined number of brewing cycles.

[0097] With reference to FIG. **59**, the grinding stage of the appliance **100** is illustrated in block form. As shown therein, and as discussed above, during the grinding stage the grinder motor **134** will rotate at a high enough frequency to grind the whole coffee beans **18** within the filter cup **10**. At the same time, the heater will pre-heat the water from the reservoir **116**. As shown in FIG. **59**, the heater may include a sensor **194** that controls the heater **136** so that a suitable temperature (or temperature range) for brewing is obtained. The heater sensor **194** is electrically coupled to the PCB **196** of the control panel **118** such that the PCB **196** may control the temperature of the heater **136** through the heater sensor **194**.

[0098] With reference to FIG. **60**, the brewing stage of the appliance is illustrated in block form. As shown therein, and as discussed above, the solenoid controls (or is deactivated) the three-way valve **151** such that the flow path is to the coffee spout **122**. A small amount of water is heated by the heater **136** and pumped into the filter cup **10** to pre-wet the coffee grounds **130**. Normal brewing is then commenced wherein water is continuously pumped through the heater **136** and into the filter cup **10**. Importantly, the water temperature is regulated throughout the brewing process for optimum brewing and taste. In connection with this, a water temperature sensor **198** detects a temperature of the water exiting the heater **136** and relays this temperature to the PCB **196** of the control panel **118**. The heater power and pump rate may then be adjusted to keep the water temperature within the optimal range. The flow meter **140** also keeps track of the flow rate and relays this information to the PCB **196**. Towards the end of the brewing process, the pump **138** will stop first to let the heater **136** further heat the water to produce steam, as discussed above. This steam then travels through the system to push the remaining coffee out of the filter cup **10**. After all coffee exits the filter cup **10**, the pressure release valve **148** is opened (in response to a signal from the PCB **196** of the control panel **118**) to release the pressure inside the filter cup **10**. Residual steam or water will then be delivered to the drain tray **120**. In the event that the brewing channel is blocked during the brewing process, the safety valve **146** is configured to release pressure to the drain tray **120**.

[0099] Finally, with reference to FIG. **61**, the brewing stage of the appliance **100** is illustrated in block form. As shown therein, and as discussed above, after a user removed the used filer cup **10** and pulls down the locking handle **114**, the loading tray **124** is moved into registration with the shower head **132**. The PCB **196** checks if the filter cup **10** is removed or is still present (through the push rods **172** and sensor **178**). If no filter cup **10** is detected, the rinsing process is automatically initiated. In particular, the solenoid **152** controls the three-way valve **151** so that the flow path is to the drain tray **120**. A small amount of hot water is pumped into the loading tray **124** and the grinding blade **128** is rotated by the grinder motor **134** to remove any remaining coffee grounds **130**. Towards the end of the rinsing process, the pump **138** will stop first to let the heater **136** further heat the water to produce steam, as discussed above. This steam then travels through the system to flush all the rinsing water and coffee grounds **130** from the filter cup **10** to the drain tray **120**.

[0100] Turning now to FIG. **62**, a detail view of the control panel **118** is shown. As shown therein, the control panel **118** includes a LCD display **200**, a "MENU" button **202** that allows for function selection and switching between functions by a user, up/down arrows **204**, **206** for adjusting each function, and a "BREW" button **208** which initiates the grinding and brewing process. In the preferred embodiment, the control panel **118** further includes a "RINSE" button **210** for manually initiating the rinsing process (in alternative to the automatic rinsing described above) and a "HOT WATER" button **212** for dispensing hot water only. In the preferred embodiment, major menu functions include grind on/off, auto rinse on/off, auto on settings, auto off settings, default brew size selection and a clock. Each of these functions may be displayed on the LCD display **200**.

[0101] While the preferred embodiment contemplates the grinding and brewing of coffee from whole coffee beans, the present invention is not intended to be limited in this regard. In particular, it is contemplated that the present invention apparatus and method are not limited to cups containing whole bean coffee, per se, and the invention may be used with cups containing ground coffee, partially ground coffee, tea leaves, ground tea, or drink mix ingredients. In addition, the appliance according to the embodiments of the present invention can make/brew beverages from any ingredients contained within the filter cup, and is not limited to brewing coffee from whole coffee beans.

[0102] Although this invention has been shown and described with respect to the detailed embodiments thereof, it will be understood by those of skill in the art that various changes may be made and equivalents may be substituted for elements thereof without departing from the scope of the invention. In addition, modifications may be made to adapt a particular situation or material to the teachings of the invention without departing from the essential scope thereof. Therefore, it is intended that the invention not be limited to the particular embodiments disclosed in the above detailed description, but that the invention will include all embodiments falling within the scope of this disclosure.

What is claimed is:

1. A pre-packaged, single serve beverage container, said container comprising:

a cup-shaped body having a floor defining an annular channel, a circumferential sidewall, and a top opening;

a resilient filter element positioned above said annular channel a plurality of drink ingredients positioned adjacent said filter element within said body; and

a cover affixed to the cup body and covering said top opening to contain said drink ingredients within said container.

2. The container of claim **1**, wherein:

said drink ingredients are whole coffee beans.

3. The container of claim **1**, wherein:

said cover is formed from metallic foil.

4. The container of claim **1**, wherein:

said resilient filter is made from plastic.

5. A beverage appliance, comprising:

a housing, said housing including a liquid reservoir;

a receptacle in said housing dimensioned to receive a container containing at least one drink ingredient having particles of a first size, said receptacle being pivotable from a first position in which said receptacle is angled

towards a front of said appliance and a second position in which said receptacle is aligned with a brew head and contacts said brew head; and

a mechanism for transforming said particles of said drink ingredient from said first size to a second size within said container, said second size being smaller than said first size.

6. The beverage appliance of claim **5**, wherein:

said drink ingredient is whole coffee beans.

7. The beverage appliance of claim **5**, further comprising:

a handle, said handle being pivotable between a first position and a second position to move said receptacle from said first position to said second position.

8. The beverage appliance of claim **5**, wherein:

said brew head includes a plurality of apertures in fluid communication with said liquid reservoir and positioned to direct a flow of liquid to said container within said receptacle.

9. The beverage appliance of claim **5**, wherein:

said receptacle includes a seal ring adjacent a top rim of said receptacle, said seal ring being configured for sealingly contacting said brew head to create a substantially air-tight seal.

10. The beverage appliance of claim **5**, further comprising:

a container unloading mechanism including a plurality of spring biased push rods, said push rods being aligned with a rim of said container and exerting a force on said rim when said receptacle is in said second position.

11. The beverage appliance of claim **10**, wherein:

said container unloading mechanism includes a sensor configured to detect a distance of vertical movement of at least one of said push rods.

12. The beverage appliance of claim **5**, wherein:

said receptacle includes a generally hollow needle arranged at the bottom thereof for piercing a bottom of said container, said hollow needle being in fluid communication with a beverage outlet.

13. The beverage appliance of claim **12**, further comprising:

a three way valve in fluid communication with said beverage outlet; and

a solenoid for controlling said three way valve to direct a flow of beverage to one of a beverage spout and a drain tray.

14. The beverage appliance of claim **5**, wherein:

said mechanism is a grinding blade rotatable driven by a motor.

15. The beverage appliance of claim **14**, wherein:

said grinding blade is substantially V-shaped and includes a bottom sharpened edge, a top sharpened edge and at least one protrusion on a side thereof, said at least one protrusion impacting said particles upon rotation of said grinding blade.

16. The beverage appliance of claim **7**, further comprising:

a sliding access door, said sliding access door being movable between an open state in which said receptacle is accessible, and a closed state in which access to said receptacle is prevented, when said handle is moved from said first position to said second position.

17. The beverage appliance of claim **5**, further comprising;

a pump for receiving liquid from said liquid reservoir and directing it to said container; and

a heater for heating said liquid.

18. The beverage appliance of claim **5**, further comprising:

a control panel for controlling at least one operation of said beverage appliance.

19. A method of brewing a beverage, said method comprising the steps of:

providing a container containing a drink ingredient having particles of a first size;

transforming said particles from said first size to a second size within said container; and

passing heated water through said container to brew said beverage.

20. The method according to claim **19**, further comprising the step of:

inserting said container into a receptacle of a beverage appliance;

piercing a bottom of said container with a generally hollow needle; and

piercing a cover of said container with a grinding blade.

21. The method according to claim **19**, further comprising the step of:

stirring said particles of said second size while passing said heated water through said container.

22. The method according to claim **20**, further comprising the steps of:

removing said container from said receptacle;

cleaning said grinding blade with heated water; and

channel said heated water from said cleaning to a drain tray.

23. The method according to claim **20**, further comprising the step of:

increasing an internal pressure of said container to expand a bottom of container to expose an aperture in said needle.

24. The method according to claim **19**, further comprising the step of:

generating a burst of steam; and

passing said steam through said container to substantially purge said container of water.

25. The method according to claim **20**, further comprising the step of:

opening a pressure release valve to release pressure within said container; and

draining residual water to a drain tray.

26. The method according to claim **22**, further comprising the step of:

sensing whether or not said container is present within said receptacle prior to cleaning said grinding blade.

27. The method according to claim **20**, further comprising the step of:

rotating a handle from a first position to a second position to move said receptacle from an angled position in which said receptacle is accessible from a front of said appliance to a second position in which said receptacle is raised into registration with a brew head.

28. The method according to claim **20**, wherein:

rotation of said handle from said first position to said second position causes a sliding access door to move to a closed state.

29. A beverage brewing system, comprising:

a housing, said housing including a liquid reservoir;

a receptacle in said housing dimensioned to receive a container containing at least one drink ingredient having particles of a first size;

a mechanism for transforming said particles of said drink ingredient from said first size to a second size within said container, said second size being smaller than said first size;

a pump in fluid communication with said liquid reservoir for pumping liquid from said liquid reservoir to said container within said receptacle;

a heater in fluid communication with said liquid reservoir for heating said liquid; and

a control unit electrically coupled to said pump and said heater for controlling said pump and said heater.

30. The beverage brewing system of claim **29**, further comprising:

a flow meter in fluid communication with said liquid reservoir for monitoring a flow rate of said liquid from said reservoir, said flow meter being electrically coupled to said control unit for relay signals indicative of said flow rate to said control unit.

31. The beverage brewing system of claim **29**, further comprising:

a temperature sensor in fluid communication with an outlet of said heater and electrically coupled to said control unit.

32. The beverage brewing system of claim **29**, further comprising:

a three way valve in fluid communication with an outlet of said receptacle, said three way valve being selectively controllable by a solenoid to direct said liquid from said outlet to one of a spout or a drain tray.

33. The beverage brewing system of claim **29**, further comprising:

a pressure release valve selectively controllable to release pressure within said container.

34. The beverage brewing system of claim **29**, further comprising:

a brew head having a plurality of apertures in fluid communication with an outlet of said heater, said brew heading being positioned so as to direct a flow of water to said container.

35. The beverage brewing system of claim **34** wherein:

said receptacle is pivotable from a first position in which said receptacle is angled towards a front of said appliance and a second position in which said receptacle is aligned with said brew head and contacts said brew head.

36. The beverage brewing system of claim **29**, wherein:

said drink ingredient is whole coffee beans.

37. The beverage brewing system of claim **35**, further comprising:

a container unloading mechanism including a plurality of spring biased push rods, said push rods being aligned with a rim of said container and exerting a force on said rim when said receptacle is in said second position, and a sensor electrically coupled to said control unit and configured to detect a distance of vertical travel of at least one of said push rods.

* * * * *