IN THE UNITED STATES DISTRICT COURT
FOR THE WESTERN DISTRICT OF TEXAS
WACO DIVISION

PROXENSE, LLC, *Plaintiff,*	§	
-v-	§	
SAMSUNG ELECTRONICS CO., LTD. AND SAMSUNG ELECTRONICS AMERICA, INC., *Defendants.*	§	**6:21-CV-210-ADA**

MEMORANDUM IN SUPPORT OF CLAIM CONSTRUCTION ORDER

Before the Court are the parties' claim construction briefs. Plaintiff Proxense, LLC (hereinafter "Proxense") submitted its Complaint for Patent Infringement and Demand for Jury Trial on April 23, 2021 (ECF No. 1). Defendants Samsung Electronics Co., Ltd. and Samsung Electronics America, Inc. (collectively "Samsung") submitted the opening Markman Brief on October 28, 2021, and the Reply Markman Brief on December 6, 2021. (ECF Nos. 33, 37, respectively). Plaintiff submitted its response on November 17, 2021, and sur-reply brief (ECF Nos. 35, 39, respectively). The Court held the Markman hearing on December 27, 2021. (ECF No. 42). The Court provides this memorandum in support of its Claim Construction Order issued on January 18, 2022, and hereby incorporates-by-reference the claim construction hearing and transcript as well as the demonstrative slides presented by the parties during the hearing. *See Phillips v. AWH Corp.*, 415 F.3d 1303, 1314 (Fed. Cir. 2005) (en banc); *see also Teva Pharm. USA, Inc. v. Sandoz, Inc.*, 135 S. Ct. 831, 841 (2015).

 APPLE EXHIBIT 1034

TABLE OF CONTENTS

I. BACKGROUND 4

II. LEGAL PRINCIPLES 4

A. Claim Construction 4

B. Departing from the Ordinary Meaning of a Claim Term 7

III. LEVEL OF ORDINARY SKILL IN THE ART 8

IV. CONSTRUCTION OF DISPUTED TERMS 9

A. Term #1: "Persistently storing . . . a tamper proof format written to a storage element on the integrated device that is unable to be subsequently altered" (730:1, 15) / "a tamper proof format written to the memory that is unable to be subsequently altered" (730:8)." 10

a. The Parties' Positions 11
b. The Court's Analysis 12

B. Term #2: "device ID code" (730:1, 3, 8, 10, 12, 15) / "ID Code" (905:1-3, 8-11, 13-14; 989:1-2, 4-8) 15

a. The Parties' Positions 16
b. The Court's Analysis 17

C. Term #3: "receiving an access message from the agent allowing the user access to an application" (730:1, 8, 15) / "receiving an access message from the agent" (730:12) / "an access message from the third-party trusted authority-indicating that the third-party trusted authority successfully authenticated the ID code" / (905:1, 9, 13) / "a transaction being completed responsive to the third-party trusted authority successfully authenticating the ID code" (989:1, 5) / "a transaction is completed responsive to successful authentication of the ID code" (989:7) 18

a. The Parties' Positions 19
b. The Court's Analysis 20

D. Term #4: "access message" (730:1, 8, 12, 15; 905:1, 9, 13) 20

a. The Parties' Positions 20
b. The Court's Analysis 21

E. Term #5: "wherein the biometric data and the scan data are both based on a fingerprint scan by the user" (730:5) 22

a. The Parties' Positions 22
b. The Court's Analysis 23

F. Term #6: "hybrid device" (188:1-2, 15, 20; 700:1-13, 16) 25

a. The Parties' Positions 25
b. The Court's Analysis 26

G. Term #7: "personal digital key" (188:1, 10; 700:1, 11) 27

a. The Parties' Positions 28
b. The Court's Analysis 30

H. Term #8: "biometric information" (188:1, 4, 10, 13; 700:4, 14) 32

a. The Parties' Positions 32
b. The Court's Analysis 33

I. Term #9: "financial information" (188:5, 6, 14, 17; 700:1, 5, 6, 11, 15, 18) 34

a. The Parties' Positions 35
b. The Court's Analysis 35

J. Term #10: "receiver-decoder circuit" (188: 1, 10; 700:1, 11) 36

a. The Parties' Positions 36
b. The Court's Analysis 38

K. Term #11: "inheritance information" (188: 9, 18; 700: 9, 19) 38

L. Term #12: "enablement signal" (188: 10-12, 17; 700: 11-13,18) 40

a. The Parties' Positions 41
b. The Court's Analysis 41

V. CONCLUSION 41

I. BACKGROUND

Proxense asserts that Samsung infringes claims of U.S. Patent Nos. 8,352,730 (the "'730 patent"), 9,049,188 (the "'188 patent"), 9,235,700 (the "'700 patent"), 9,298,905 (the "'905 patent"), and 10,698,989 (the "'989 patent") (collectively, the "Asserted Patents").

II. LEGAL PRINCIPLES

A. Claim Construction

"It is a 'bedrock principle' of patent law that 'the claims of a patent define the invention to which the patentee is entitled the right to exclude.'" *Phillips v. AWH Corp.*, 415 F.3d 1303, 1312 (Fed. Cir. 2005) (en banc) (quoting *Innova/Pure Water Inc. v. Safari Water Filtration Sys., Inc.*, 381 F.3d 1111, 1115 (Fed. Cir. 2004)). To determine the meaning of the claims, courts start by considering the intrinsic evidence. *Id.* at 1313; *C.R. Bard, Inc. v. U.S. Surgical Corp.*, 388 F.3d 858, 861 (Fed. Cir. 2004); *Bell Atl. Network Servs., Inc. v. Covad Commc'ns Grp., Inc.*, 262 F.3d 1258, 1267 (Fed. Cir. 2001). The intrinsic evidence includes the claims themselves, the specification, and the prosecution history. *Phillips*, 415 F.3d at 1314; *C.R. Bard, Inc.*, 388 F.3d at 861. The general rule—subject to certain specific exceptions discussed *infra*—is that each claim term is construed according to its ordinary and accustomed meaning as understood by one of ordinary skill in the art at the time of the invention in the context of the patent. *Phillips*, 415 F.3d at 1312–13; *Alloc, Inc. v. Int'l Trade Comm'n*, 342 F.3d 1361, 1368 (Fed. Cir. 2003); *Azure Networks, LLC v. CSR PLC*, 771 F.3d 1336, 1347 (Fed. Cir. 2014) (quotation marks omitted) ("There is a heavy presumption that claim terms carry their accustomed meaning in the relevant community at the relevant time.") *cert. granted, judgment vacated,* 135 S. Ct. 1846 (2015).

"The claim construction inquiry . . . begins and ends in all cases with the actual words of the claim." *Renishaw PLC v. Marposs Societa' per Azioni*, 158 F.3d 1243, 1248 (Fed. Cir. 1998). "[I]n all aspects of claim construction, 'the name of the game is the claim.'" *Apple Inc. v. Motorola,*

Inc., 757 F.3d 1286, 1298 (Fed. Cir. 2014) (quoting *In re Hiniker Co.*, 150 F.3d 1362, 1369 (Fed. Cir. 1998)) *overruled on other grounds by Williamson v. Citrix Online, LLC*, 792 F.3d 1339 (Fed. Cir. 2015). First, a term's context in the asserted claim can be instructive. *Phillips*, 415 F.3d at 1314. Other asserted or unasserted claims can also aid in determining the claim's meaning, because claim terms are typically used consistently throughout the patent. *Id.* Differences among the claim terms can also assist in understanding a term's meaning. *Id*. For example, when a dependent claim adds a limitation to an independent claim, it is presumed that the independent claim does not include the limitation. *Id*. at 1314–15.

"[C]laims 'must be read in view of the specification, of which they are a part.'" *Id*. (quoting *Markman v. Westview Instruments, Inc.*, 52 F.3d 967, 979 (Fed. Cir. 1995) (en banc)). "[T]he specification 'is always highly relevant to the claim construction analysis. Usually, it is dispositive; it is the single best guide to the meaning of a disputed term.'" *Id*. (quoting *Vitronics Corp. v. Conceptronic, Inc.*, 90 F.3d 1576, 1582 (Fed. Cir. 1996)); *Teleflex, Inc. v. Ficosa N. Am. Corp.*, 299 F.3d 1313, 1325 (Fed. Cir. 2002). This is true because a patentee may define his own terms, give a claim term a different meaning than the term would otherwise possess, or disclaim or disavow the claim scope. *Phillips*, 415 F.3d at 1316. In these situations, the inventor's lexicography governs. *Id*.

The specification may also resolve ambiguous claim terms "where the ordinary and accustomed meaning of the words used in the claims lack sufficient clarity to permit the scope of the claim to be ascertained from the words alone." *Teleflex, Inc.*, 299 F.3d at 1325. But, "'[a]lthough the specification may aid the court in interpreting the meaning of disputed claim language, particular embodiments and examples appearing in the specification will not generally be read into the claims.'" *Comark Commc'ns, Inc. v. Harris Corp.*, 156 F.3d 1182, 1187 (Fed. Cir.

1998) (quoting *Constant v. Advanced Micro-Devices, Inc.*, 848 F.2d 1560, 1571 (Fed. Cir. 1988)); *see also Phillips*, 415 F.3d at 1323. "[I]t is improper to read limitations from a preferred embodiment described in the specification—even if it is the only embodiment—into the claims absent a clear indication in the intrinsic record that the patentee intended the claims to be so limited." *Liebel-Flarsheim Co. v. Medrad, Inc.*, 358 F.3d 898, 913 (Fed. Cir. 2004).

The prosecution history is another tool to supply the proper context for claim construction because, like the specification, the prosecution history provides evidence of how the U.S. Patent and Trademark Office ("PTO") and the inventor understood the patent. *Phillips*, 415 F.3d at 1317. However, "because the prosecution history represents an ongoing negotiation between the PTO and the applicant, rather than the final product of that negotiation, it often lacks the clarity of the specification and thus is less useful for claim construction purposes." *Id.* at 1318; *see also Athletic Alts., Inc. v. Prince Mfg.*, 73 F.3d 1573, 1580 (Fed. Cir. 1996) (ambiguous prosecution history may be "unhelpful as an interpretive resource").

Although extrinsic evidence can also be useful, it is "'less significant than the intrinsic record in determining the legally operative meaning of claim language.'" *Phillips*, 415 F.3d at 1317 (quoting *C.R. Bard, Inc.*, 388 F.3d at 862). Technical dictionaries and treatises may help a court understand the underlying technology and the manner in which one skilled in the art might use claim terms, but technical dictionaries and treatises may provide definitions that are too broad or may not be indicative of how the term is used in the patent. *Id*. at 1318. Similarly, expert testimony may aid a court in understanding the underlying technology and determining the particular meaning of a term in the pertinent field, but an expert's conclusory, unsupported assertions as to a term's definition are not helpful to a court. *Id*. Extrinsic evidence is "less reliable

than the patent and its prosecution history in determining how to read claim terms." *Id*. The Supreme Court has explained the role of extrinsic evidence in claim construction:

> In some cases, however, the district court will need to look beyond the patent's intrinsic evidence and to consult extrinsic evidence in order to understand, for example, the background science or the meaning of a term in the relevant art during the relevant time period. *See, e.g., Seymour v. Osborne*, 11 Wall. 516, 546 (1871) (a patent may be "so interspersed with technical terms and terms of art that the testimony of scientific witnesses is indispensable to a correct understanding of its meaning"). In cases where those subsidiary facts are in dispute, courts will need to make subsidiary factual findings about that extrinsic evidence. These are the "evidentiary underpinnings" of claim construction that we discussed in *Markman*, and this subsidiary factfinding must be reviewed for clear error on appeal.

Teva Pharm. USA, Inc. v. Sandoz, Inc., 574 U.S. 318, 331–32 (2015).

B. Departing from the Ordinary Meaning of a Claim Term

There are "only two exceptions to [the] general rule" that claim terms are construed according to their plain and ordinary meaning: "1) when a patentee sets out a definition and acts as his own lexicographer, or 2) when the patentee disavows the full scope of the claim term either in the specification or during prosecution."[1] *Golden Bridge Tech., Inc. v. Apple Inc.*, 758 F.3d 1362, 1365 (Fed. Cir. 2014) (quoting *Thorner v. Sony Comput. Entm't Am. LLC*, 669 F.3d 1362, 1365 (Fed. Cir. 2012)); *see also GE Lighting Sols., LLC v. AgiLight, Inc.*, 750 F.3d 1304, 1309 (Fed. Cir. 2014) ("[T]he specification and prosecution history only compel departure from the plain meaning in two instances: lexicography and disavowal."). The standards for finding lexicography or disavowal are "exacting." *GE Lighting Sols.*, 750 F.3d at 1309.

To act as his own lexicographer, the patentee must "clearly set forth a definition of the disputed claim term," and "clearly express an intent to define the term." *Id.* (quoting *Thorner*, 669

[1] Some cases have characterized other principles of claim construction as "exceptions" to the general rule, such as the statutory requirement that a means-plus-function term is construed to cover the corresponding structure disclosed in the specification. *See, e.g.*, *CCS Fitness, Inc. v. Brunswick Corp.*, 288 F.3d 1359, 1367 (Fed. Cir. 2002).

F.3d at 1365); *see also Renishaw*, 158 F.3d at 1249. The patentee's lexicography must appear "with reasonable clarity, deliberateness, and precision." *Renishaw*, 158 F.3d at 1249.

To disavow or disclaim the full scope of a claim term, the patentee's statements in the specification or prosecution history must amount to a "clear and unmistakable" surrender. *Cordis Corp. v. Bos. Sci. Corp.*, 561 F.3d 1319, 1329 (Fed. Cir. 2009); *see also Thorner*, 669 F.3d at 1366 ("The patentee may demonstrate intent to deviate from the ordinary and accustomed meaning of a claim term by including in the specification expressions of manifest exclusion or restriction, representing a clear disavowal of claim scope."). "Where an applicant's statements are amenable to multiple reasonable interpretations, they cannot be deemed clear and unmistakable." *3M Innovative Props. Co. v. Tredegar Corp.*, 725 F.3d 1315, 1326 (Fed. Cir. 2013).

III. LEVEL OF ORDINARY SKILL IN THE ART

It is well established that patents are interpreted from the perspective of one of ordinary skill in the art ("POSITA"). *See Phillips*, 415 F.3d at 1313 ("[T]he ordinary and customary meaning of a claim term is the meaning that the term would have to a person of ordinary skill in the art in question at the time of the invention, i.e., as of the effective filing date of the patent application."). The Federal Circuit has advised that the "[f]actors that may be considered in determining the level of skill in the art include: (1) the educational level of the inventors; (2) the type of problems encountered in the art; (3) prior art solutions to those problems; (4) the rapidity with which innovations are made; (5) sophistication of the technology; and (6) education level of active workers in the field." *Env'tl Designs, Ltd. v. Union Oil Co. of California*, 713 F.2d 693, 696 (Fed. Cir. 1983). "These factors are not exhaustive but are merely a guide to determining the level of ordinary skill in the art." *Daiichi Sankyo Co. Ltd. v. Apotex, Inc.*, 501 F.3d 1254, 1256 (Fed. Cir. 2007).

The parties do not dispute the qualifications of a POSITA, at least not at this stage in the case. Regarding the Asserted Patents, Samsung's expert, Dr. Seth James Nielson, opines that a POSITA would have "a bachelor's degree in computer or electrical engineering (or an equivalent degree) with at least three years of experience in the field of encryption and security (or an equivalent). This level of skill is approximate, and more experience would compensate for less formal education, and vice versa." ECF No. 33-2 ¶ 64. Proxense does not rely on an expert for its claim construction briefing, nor does it dispute Samsung's level of skill. *See generally* ECF No. 33, 39.

Given that the parties do not dispute the qualifications of a POSITA at this time, and considering the factors that may be considered in determining the level of skill in the art, the Court finds that a person of ordinary skill in the art is as defined by Samsung's expert, as discussed above for the Asserted Patents.

IV. CONSTRUCTION OF DISPUTED TERMS

The parties' dispute the meaning and scope of twelve terms or phrases in the Asserted Patents. Each dispute is addressed below.

The inventions set forth in the Asserted Patents (U.S. Patent Nos. 8,352,730, 9,298,905, and 10,698,989 ("'730 Patent Family" or "Family A") and U.S. Patent Nos. 9,049,188 and 9,235,700 (the "'188 Patent Family" or "Family B") allow users to carry, control, and protect their own personal data on devices like mobile phones, which allows for secure financial transactions using those devices. Biometric authentication and use of remote (e.g., web-based) applications requires an element of trust between the user and the service provider. The user must trust that the service provider can and will protect and will not abuse personal data. Utilizing online services, such as social media, office, productivity, financial, travel, and other services, requires the user trust the service provider to safeguard the personally identifying information a user provides in

connection with using the service. Such personally identifying information could include biometric data used, for example, as a means of verifying identity of an authorized user. There exists a need to safeguard and limit the information that is actually shared with multiple service providers. The inventions of the Asserted Patents address such issues by providing ways to use biometric information securely to access and/or utilize private, sensitive information.

Family A patents are directed to inventions ensuring biometric data privacy while enabling biometric authentication. The claimed inventions improve on the prior art by providing for multiple levels of authentication, such that a user is verified as properly in possession of a biometric access instrumentality, and also biometrically verified as authorized to access sensitive and/or secure resources. Family B patents are directed to inventions that improve the capabilities and flexible arrangements of multiple devices and instrumentalities that are used to provide means of authorized access to access sensitive and/or secure resources while retaining security.

A. Term #1: "Persistently storing . . . a tamper proof format written to a storage element on the integrated device that is unable to be subsequently altered" (730:1, 15) / "a tamper proof format written to the memory that is unable to be subsequently altered" (730:8)."

Claim Term	Plaintiff's Proposed Construction	Defendant's Proposed Construction	Court's Final Construction
"Persistently storing . . . a tamper proof format written to a storage element on the integrated device that is unable to be subsequently altered" (730:1, 15) / "a tamper proof format written to the memory that is unable to be subsequently altered" (730:8).	No construction necessary or possible, plain and ordinary meaning	Permanently storing in a form that prevents subsequent writing to store new data or modifications to existing data	No construction necessary or possible, plain and ordinary meaning

The ’730 Patent, titled “BIOMETRIC PERSONAL DATA KEY (PDK) AUTHENTICATION,” issued on January 8, 2013, and was filed on December 20, 2005. The ’730 Patent “relates generally to computerized authentication, and more specifically, to an authentication responsive to biometric verification of a user being authenticated.” ’730 Patent at 1:15–18. The Abstract of the ’730 Patent states:

> Systems and methods are provided for an integrated device that persistently (or permanently) stores biometric data for a user in a tamper-resistant format. Subsequently, scan data collected from a user (e.g., a finger-print) can be compared against the biometric data. Once the user has been verified by the integrated device, a code can be wirelessly transmitted for authentication. The authentication module sends the code to a trusted key authority. The trusted key authority checks a list of enrolled integrated devices for a match. If there is a match, the authentication module sends a message to an application to allow access by the user. The trusted key authority also stores a profile associated with the code. The profile can contain user information such as name, age, account numbers, preferences, etc. and can also describe the status of the integrated device.

Claim 1 of the ’730 Patent is an illustrative claim and recites the following step (disputed terms in italics):

> 1.A method for verifying a user during authentication of an integrated device, comprising the steps of:
>
> *persistently storing* biometric data of the user and a plurality of codes and other data values comprising a device ID code uniquely identifying the integrated device and a secret decryption value *in a tamper proof format written to a storage element on the integrated device that is unable to be subsequently altered*; wherein the biometric data is selected from a group consisting of a palm print, a retinal scan, an iris scan, a hand geometry, a facial recognition, a signature recognition and a voice recognition;.

a. The Parties’ Positions

Samsung argues that the Court should find the construction to be “permanently storing in a form that prevents subsequent writing to store new data or modifications to existing data.” ECF

No. 33 at 3. Samsung relies on the language of Claim 1 of the '730 Patent that states, "unable to be subsequently altered." *Id.* Samsung argues that Proxense's construction of plain and ordinary meaning would "fundamentally break this claim" because it would "simultaneously requir[e] the biometric data to be "both be 'unable to be subsequently altered' and able to be 'deleted and replaced.'" *Id.* at 3–4. Specifically, Samsung contends that "it is incongruous for the biometric data to both be persistently or permanently stored but be deleted and replaced." *Id.* at 4.

Proxense responds that "Samsung's proposed construction for these two phrases, 'permanently storing in a form that prevents subsequent writing to store new data or modifications to existing data' simply rephrases the plain and ordinary meaning of the existing claim term 'that is unable to be subsequently altered.'" ECF No. 35 at 4. According to Proxense, this proposed construction "adds nothing but unnecessary confusion by pulling in the distinct terms 'persistently storing' and 'tamper proof' as though they also mean 'unable to be subsequently altered.'" *Id.* Proxense further argues that the limitation "that is unable to be subsequently altered" is in plain English and uses no terms of art or specially defined terms. *Id.* Thus, Proxense contends that the claim language requires storage on a medium that is persistent in a tamper proof format, which tamper proofing has the additional specific attribute of not being able to be subsequently altered once in memory. *Id.*

b. The Court's Analysis

As a preliminary matter, in its opening brief Samsung did not request a construction of "persistently storing," "persistent storage," or "persistently stores." Samsung justifies its failure to brief "persistently storing" as a distinct term by claiming that it "would waste space and time" to brief this term, and relies on the inapposite case *SIPCO, LLC v. Amazon.com, Inc.* for the proposition that it would be "more natural" to construe the "larger term." ECF No. 37 at 2. But

SIPCO dealt with a wholly different and far simpler issue: whether the court would construe the term "'remote devices' or the larger term 'plurality of remote devices.'" *SIPCO, LLC v. Amazon.com, Inc.*, No. 2:08-CV-359-JRG, 2012 WL 5195942, at *10 (E.D. Tex. Oct. 19, 2012). *SIPCO* does not address the issue created by Samsung at all. The long phrases Samsung offers for construction contain several distinct claim terms like "tamper proof format" and "unable to be subsequently altered," which do not appear in claims of other asserted patents. Samsung is trying to give three or more distinct claim terms identical, redundant constructions across several patents. This is contrary to fundamental tenets of claim construction and represents an end-run around the limitations set by this Court on claim terms to be construed. Moreover, in its opening brief, Samsung only listed claims 1, 8, and 15 of the 730 Patent when requesting construction of these long phrases. ECF No. 33 at 3. Though Samsung mentions "subset terms" in a footnote, it provides no arguments in support nor any request for those terms to be construed as they relate to the other asserted patents. *Id.* n.1. Accordingly, Samsung has not properly submitted those terms for construction.

The Court finds that the "Persistently storing . . . a tamper proof format written to a storage element on the integrated device that is unable to be subsequently altered" and "a tamper proof format written to the memory that is unable to be subsequently altered" terms should be given their plain and ordinary meaning. Defendants' construction improperly adds "permanently storing in a form that prevents subsequent writing", which would render the term "unable to be subsequently altered" meaningless. Critically, there is no indication that the patentee intended "persistently storing" and "tamper proof" to mean "unable to be subsequently altered", but Defendants' construction would equate those terms.

A review of the intrinsic evidence reveals why Samsung's proposed construction of these

lengthy phrases is improper. The specification clearly defines "persistently storing" as storing in non-volatile memory. '730 Pat., 4:29–36 ("Persistent storage 226 *persistently stores* biometric data . . . . Persistent storage 226 can include, for example, a ROM element, a flash memory element, or *any other type of non-volatile storage element*.") (emphasis added). Furthermore, only in claim 1 of the '730 Patent does "persistently storing" co-occur with "tamper proof format" and "unable to be subsequently altered." Claim 8 of the '730 Patent does not recite "persistently storing," "persistent storage", or other similar words. Additionally, none of the claims of the '905 and '989 Patents recite a "tamper proof format" or "unable to be subsequently altered." A single cooccurrence in claim 1 of the '730 Patent does not justify equating "persistent storage" to mean "unable to be subsequently altered" in claims of the '905 and '989 Patents, as Samsung attempts to do.

Defendants' limitation is only from one embodiment, and it should not be imported into the definition. Specifically, neither "tamper proofing" nor "persistent storage" are limited by the specification in the way Samsung argues. "In one embodiment, at least some of persistent storage 226 is a memory element that can be written to once but cannot subsequently be altered." '730 Pat., 4:31–33 (emphasis added). Even in this single embodiment, which Samsung tries to read as the sole embodiment, only some, not all, "persistent storage" is so limited that it "cannot subsequently be altered." Other persistent storage, therefore, can be subsequently altered even in this embodiment. Likewise, in this embodiment only, tamper-proofing prevents altering an instance of stored data by adding to it or modifying it, such that features cannot be added to or removed from saved biometric data. '730 Pat., 4:38–41. Tamper proofing alone is not itself limited in the specification to preventing deletion and replacement of stored data.

In sum, the Court finds that no construction is necessary for these terms and they will each

receive their plain and ordinary meaning.

B. Term #2: "device ID code" (730:1, 3, 8, 10, 12, 15) / "ID Code" (905:1-3, 8-11, 13-14; 989:1-2, 4-8)

Claim Term	Plaintiff's Proposed Construction	Defendant's Proposed Construction	Court's Final Construction
"device ID code" (730:1, 3, 8, 10, 12, 15) / "ID Code" (905:1-3, 8-11, 13-14; 989:1-2, 4-8)	A unique code identifying a device	The device-specific code that identifies the device	A unique code identifying a device

While the '730 Patent includes claims that include that term "device ID code," the '905 and the '989 Patents include the term "ID code." Claim 1 of the '730 Patent is an illustrative claim and recites the following steps (disputed term in italics):

> 1.A method for verifying a user during authentication of an integrated device, comprising the steps of:
>
> persistently storing biometric data of the user and a plurality of codes and other data values comprising a *device ID code* uniquely identifying the integrated device and a secret decryption value in a tamper proof format written to a storage element on the integrated device that is unable to be subsequently altered; wherein the biometric data is selected from a group consisting of a palm print, a retinal scan, an iris scan, a hand geometry, a facial recognition, a signature recognition and a voice recognition;
>
> . . .
>
> responsive to a determination that the scan data matches the biometric data, wirelessly sending one or more codes from the plurality of codes and the other data values for authentication by an agent that is a third-party trusted authority possessing a list of *device ID codes* uniquely identifying legitimate integrated devices, wherein the one or more codes and other data values includes the *device ID code*; and . . . .

Claim 1 of the '905 Patent is another illustrative claim and recites the following steps (disputed term in italics):

> 1.A method comprising:

> persistently storing biometric data of a legitimate user and an *ID code* on an integrated device;
>
> . . .
>
> responsive to a determination that the scan data matches the biometric data, wirelessly sending the *ID code* for comparison by a third-party trusted authority against one or more previously registered *ID codes* maintained by the third-party trusted authority; and
>
> responsive to receiving an access message from the third-party trusted authority-indicating that the third-party trusted authority successfully authenticated the *ID code*, allowing the user to complete a financial transaction.

a. The Parties' Positions

Samsung contends that the "device ID code described in various ways by the patents all describe a device-specific code rather than merely a unique code that can identify a device." ECF No. 33 at 5. Samsung primarily relies on the prosecution history to make this distinction in its construction. *See id.* In particular, Samsung argues that the applicant specifically distinguished "mere[] user-specific data such as names, public keys and CRCs" in contrast to "device-specific data . . . much less 'a list of codes identifying legitimate integrated devices.'" *Id.* (citing ECF No. 33-1 ('730 Patent History, Applicant Argument/Remarks Made in Amendment (2011-01-03) at 10)). Samsung further relies on two embodiments from the specification. Samsung contends that the specification provides two methods for assigning or creating these codes. The code may be assigned "during the manufacturing process" or "the trusted authority can provide the code to biometric key 100 to be stored therein." *Id.* at 6 (citing '730 Patent at 4:10–12, 43–49).

Proxense responds that the plain and ordinary meaning should gover, but that if the court concludes that the terms should be construed for additional clarity, the construction "A unique code identifying a device" should be adopted by the Court. ECF No. 35 at 7. Proxense contends that Samsung's additional limitation "device specific" is merely redundant in claims of the '730 and '989 Patents that include the additional limitations "uniquely identifying the integrated

device" and "uniquely identifying the smartphone among a plurality of smartphones." *Id.* at 7. Proxense further asserts that the addition of the words "device specific" in Samsung's proposed construction interposes an additional limitation whereby "device-specific" means that the device is tied to one device ID code, which is immutable, and that such a claimed device cannot ever be given a different unique identifier. *Id.* Proxense further rebuts Samsung's prosecution history disclaimer argument by contend that the Applicant only used the term "device specific" in that discussion to describe the concept of a "code uniquely identifying" a device, as absent from the prior art. *Id.* at 8.

b. The Court's Analysis

The Court finds that this term should be construed as "A unique code identifying a device." The Court finds that a construction is necessary here because of a need for clarification. Defendants' construction, however, is redundant as the limitations already include such language like "uniquely identifying the integrated device." Defendants' limitation could also be construed to limiting one ID code per device, which is a misleading because a device may at some point be given a different unique identifier (such as during enrollment with a specific system).

Defendants have also not proved disclaimer in the prosecution history. The prosecution history cited by Samsung does not limit or change the meaning of the terms "device ID code" or "ID code." The distinction to which Samsung refers merely resolved the fact that the prior art did not disclose the combination of user specific biometric data and unique device identifying code. ECF No. 35-8 at 8–10 (noting that prior art reference merely sent a scrambled representation of the biometric data to the authorization system, not two distinct units of information, the biometric data and a unique device ID code). The Applicant explicitly stated that "the claimed invention . . . sends the code uniquely identifying the integrated device for authentication" and that the prior

art reference "does not disclose any additional data, such as a code, that uniquely identifies an integrated device" and that it "does not disclose or suggest a code uniquely identifying an integrated device." *See id.* In the Final Rejection Mailed November 22, 2010, the Examiner asserted that the prior art disclosed transmitting a private decryption key. ECF No. 39-2 at 4. Attempting to correct the Examiner, Proxense explained how the prior art operated. ECF No. 33-6 at 26. Proxense noted that "the transmitted CRC, however, identifies a reference fingerprint image and does not identify the user's handheld device." *Id.* at 9. Proxense's explanation therefore, did not to alter the clear meaning of the claim language.

Accordingly, the Court finds that the construction of these terms should be "A unique code identifying a device."

C. Term #3: "receiving an access message from the agent allowing the user access to an application" (730:1, 8, 15) / "receiving an access message from the agent" (730:12) / "an access message from the third-party trusted authority-indicating that the third-party trusted authority successfully authenticated the ID code" / (905:1, 9, 13) / "a transaction being completed responsive to the third-party trusted authority successfully authenticating the ID code" (989:1, 5) / "a transaction is completed responsive to successful authentication of the ID code" (989:7)

Claim Term	Plaintiff's Proposed Construction	Defendant's Proposed Construction	Court's Final Construction
"receiving an access message from the agent allowing the user access to an application" (730:1, 8, 15) / "receiving an access message from the agent" (730:12) / "an access message from the third-party trusted authority-indicating that the third-party trusted authority successfully authenticated the ID code" / (905:1, 9, 13) / "a transaction being completed responsive to the third-party	No construction necessary or possible, plain and ordinary meaning.	Receiving a signal from the agent permitting a user to access an application, / Receiving a signal from the agent permitting a user to access.	No construction necessary, plain and ordinary meaning

trusted authority successfully authenticating the ID code" (989:1, 5) / "a transaction is completed responsive to successful authentication of the ID code" (989:7)			

Claim 1 of the '730 Patent is an illustrative claim and recites the following steps (disputed terms in italics):

> 1.A method for verifying a user during authentication of an integrated device, comprising the steps of:
>
> . . .
>
> responsive to authentication of the one or more codes and the other data values by the agent, *receiving an access message from the agent allowing the user access to an application*, wherein the application is selected from a group consisting of a casino machine, a keyless lock, a garage door opener, an ATM machine, a hard drive, computer software, a web site and a file.

a. The Parties' Positions

Samsung contends that Claim 1 of each of the '730 family patents provides that upon the ID code being verified, the application then provides the user access upon receipt of a communication indicating successful authentication. ECF No. 33 at 9. According to Samsung, Each claim requires that information regarding the authentication at the third party agent be communicated to the application. *Id.* Samsung argues that the application then allows a user access based on authentication of the user and the user device. *Id.* Thus, Samsun asserts that the '730 and '905 Patents describe this communication as an "access message" and the '989 Patent describes a "transaction being completed" but each has the same functionality, namely to permit access. *Id.*

In response, Proxense argues that "it is not possible or necessary to construe these phrases because they are too long and contain multiple claim terms or that they be afforded their plain and ordinary meaning." ECF No. 35 at 11. Further, Proxense contends that "because constituent terms

are submitted for construction, these longer phrases need no further construction." *Id.*

b. The Court's Analysis

The Court agrees with Proxense that no construction is required for these terms. These phrases should retain their plain and ordinary meaning, as is generally presumed. *See Phillips*, 415 F.3d at 1312. The jury will not have difficulty understanding the meaning of these phrases as they are in plain English with no terms of art. Individual discrete terms within this phrase are analyzed separately for construction ("access message," and "ID code"). *See CloudofChange*, 2020 WL 4004810, at *2. Samsung has not met the burden to depart from the plain and ordinary meaning. The Court, therefore, declines to construe these phrases other than according to their plain and ordinary meaning.

D. Term #4: "access message" (730:1, 8, 12, 15; 905:1, 9, 13)

Claim Term	Plaintiff's Proposed Construction	Defendant's Proposed Construction	Court's Final Construction
access message	A signal or notification enabling or announcing access	A signal permitting a user to access.	A signal or notification enabling or announcing access

Claim 1 of the '730 Patent is an illustrative claim and recites the following steps (disputed terms in italics):

> 1.A method for verifying a user during authentication of an integrated device, comprising the steps of:
>
> . . .
>
> responsive to authentication of the one or more codes and the other data values by the agent, receiving an *access message* from the agent allowing the user access to an application, wherein the application is selected from a group consisting of a casino machine, a keyless lock, a garage door opener, an ATM machine, a hard drive, computer software, a web site and a file.

a. The Parties' Positions

The parties dispute appears to center over whether the "access message" is limited to something that causes access to be permitted, or rather is a broader term that encompasses something that not only causes access but can also announce that access is permitted.

Proxense argues that the claim language and specification show that access message can do more than allow access. ECF No. 35 at 9. Specifically, Proxense contends that this term should receive the construction of "A signal or notification enabling or announcing access." *Id.* According to Proxense, the claim language itself ("receiving an access message from the agent allowing the user access to an application . . . .") shows that "access message" is broader than a message that allows access. The word "allowing" as used in this context can be understood to mean both "causes access to be permitted" and "announces that access is permitted." The latter would permit the application to move to a next step or inform (e.g., check appropriate age before granting access) a party that access was permitted (e.g., pop up a window to inform a user). Proxense also relies on the specification disclosing several examples of "access message" having an effect other than permitting access. *Id.* at 9–10.

b. The Court's Analysis

The Court agrees with Proxense and finds that this term should receive the broader construction "A signal or notification enabling or announcing access." The sole mention of "access message" in the specification is when after the device is authenticated, the system sends an "access message to the application to allow user access and/or provide additional information from the profile 740 (such as the user's age)." '730 Patent at 7:18–21. The access message therefore can have the effect of moving the user to the next step of providing information (like providing the user's age), which is more than just enabling access. Moreover, the term "access message" appears in claims 1, 9, and 13 of the 905 Patent (part of this family of patents), where it "indicat[es] that

the third-party trusted authority successfully authenticated the ID code." That language of "indicates" suggests that it can serve to notify the user of access, not just enable access.

Accordingly, the Court finds that the construction of the "access message" term should be "A unique code identifying a device."

E. Term #5: "wherein the biometric data and the scan data are both based on a fingerprint scan by the user" (730:5)

Claim Term	Plaintiff's Proposed Construction	Defendant's Proposed Construction	Court's Final Construction
"wherein the biometric data and the scan data are both based on a fingerprint scan by the user" (730:5)	No construction needed, plain and ordinary meaning.	Invalid under §112 ¶4	No construction needed, plain and ordinary meaning.

Claim 5 of the '730 Patent recites the following step (disputed terms in italics):

> 5. The method of claim 1, *wherein the biometric data and the scan data are both based on a fingerprint scan by the user*.

Claim 5 depends from Claim 1 of the '730 Patent. The relevant portion of Claim 1 of the '730 Patent states the following: "wherein the biometric data is selected from a group consisting of a palm print, a retinal scan, an iris scan, a hand geometry, a facial recognition, a signature recognition and a voice recognition."

a. The Parties' Positions

Samsung contends that "[d]ependent claim 5 is invalid under §112 ¶ 4 for failing to further limit independent claim 1 but instead broadening the closed Markush grouping set forth in claim 1." ECF No. 33 at 10. According to Samsung, the Markush group "wherein the biometric data is selected from a group consisting of a palm print, a retinal scan, an iris scan, a hand geometry, a facial recognition, a signature recognition and a voice recognition" does not include anything

"based on a fingerprint scan by the user." Thus, Samsung argues that Proxense expands rather than further limits claim 1 in opposition to §112 ¶ 4 and is therefore invalid.

Proxense responds that dependent claim 5 is not invalid because "it properly reduces the number of possible fingerprints from those intrinsic to the 'palmprint' of independent claim 1." ECF No. 35 at 12. According to Proxense, dependent claim 5 properly narrows the scope of "biometric data" to a single "fingerprint." Proxense asserts that the plain and ordinary meaning of "palm print" would be understood to include some combination of prints from the heel and/or flat of the hand, with multiple fingerprints and/or a thumb print (*see, e.g.*, 730 Pat. 3:4–11, expanding exemplary biometric data from "fingerprint" to additional metrics like an entire "palm print"; *id.* at 3:29–33, indicating that biometric data capture could include thumb or other fingerprints). Regardless, if the claims remain ambiguous, Proxense argues that "it should be construed to preserve validity, such that 'fingerprint' is understood to be one example of the 'biometric' information intrinsic to a 'palmprint', and thus dependent claim 5 properly limits the scope of claim 1." ECF No. 25 at 13 (citing *Phillips*, 415 F.3d at 1327.

b. The Court's Analysis

A Markush claim is a particular kind of patent claim that lists alternative species or elements that can be selected as part of the claimed invention. *Multilayer Stretch Cling Film Holdings, Inc. v. Berry Plastics Corp.*, 831 F.3d 1350, 1357 (Fed. Cir. 2016). Claim drafters often use the term 'group of' to signal a Markush group. *Id.* A Markush group lists specified alternatives in a patent claim, typically in the form: a member selected from the group consisting of A, B, and C. *Id.* Use of the transitional phrase "consisting of" to set off a patent claim element creates a very strong presumption that that claim element is "closed" and therefore "exclude[s] any elements, steps, or ingredients not specified in the claim." *Id.*

Here, Claim 1's limitation "wherein the biometric data is selected from a group consisting

of a palm print, a retinal scan, an iris scan, a hand geometry, a facial recognition, a signature recognition and a voice recognition" is a closed Markush group. The Court, however, finds that no construction is necessary for this term and that it should receive its plain and ordinary meaning. Claim 5 of the '730 Patent properly narrows the scope of "biometric data" to a single "fingerprint". The plain and ordinary meaning of "palm print" would be understood to include some combination of prints from the heel and/or flat of the hand, with multiple fingerprints and/or a thumb print (*see, e.g.*, 730 Pat. 3:4–11, expanding exemplary biometric data from "fingerprint" to additional metrics like an entire "palm print"; *id.* at 3:29–33, indicating that biometric data capture could include thumb or other fingerprints).

Samsung's argument hinges on at least two inaccurate premises. *First*, that a person of ordinary skill in the art would not understand that the plain and ordinary meaning of "palm print" includes multiple fingerprints and/or a thumb print. *Second*, that the Examiner's Amendment that added the Markush group to claim 1, ECF No. 39-2 at 35, caused dependent claim 5 (then pending as claim 7, which was unaltered by the Examiner's Amendment) to become indefinite. Both premises collapse under the well-established presumption "that an examiner would not introduce an indefinite term into a claim when he/she chooses to amend the claim for the very purpose of putting the application in a condition for allowance." *Tinnus Enterprises, LLC v. Telebrands Corp.*, 733 F. App'x 1011, 1020 (Fed. Cir. 2018) (citing *Northern Telecom, Inc. v. Datapoint Corp.*, 908 F.2d 931, 939 (Fed. Cir. 1990) ("It is presumed that public officials do their assigned jobs")). Claim 5 of the '730 Patent, therefore, properly narrows the scope of the "biometric data" Markush group to a specific region of a palm print—a single "fingerprint."

Accordingly, the Court finds that no construction is necessary for "wherein the biometric data and the scan data are both based on a fingerprint scan by the user" and that it should receive its plain and ordinary meaning.

F. Term #6: "hybrid device" (188:1-2, 15, 20; 700:1-13, 16)

Claim Term	Plaintiff's Proposed Construction	Defendant's Proposed Construction	Court's Final Construction
"Hybrid device" (188: 1-12, 15, 20; 700: 1-13, 16)	A device comprising an integrated personal digital key (PDK) and an integrated receiver-decoder circuit.	Indefinite	A device comprising an integrated personal digital key (PDK) and an integrated receiver-decoder circuit.

The Claim 1 of the '188 Patent is an illustrative claim and recites the following limitations (disputed terms in italics):

> 1. A *hybrid device* comprising:
> an integrated personal digital key (PDK) for storing local, secured biometric information for authenticating a user and capable of communicating wirelessly with an external receiver-decoder circuit (RDC); and
> an integrated RDC for communicating wirelessly with at least one external PDK within a proximity zone, the integrated RDC coupled to the integrated PDK by a first signal line for communication, the integrated RDC coupled to at least one other component of the *hybrid device* by a second signal line, one or more of the integrated RDC and integrated PDK enabling one or more of an application, a function, and a service.

The abstract of the '188 Patent further explains the following:

> The hybrid device operates in one of several modes including, PDK only, RDC only, or PDK and RDC. This allows a variety of system configurations for mixed operation including: PDK/RDC, RDC/RDC or PDK/PDK.

a. The Parties' Positions

Samsung contends that "hybrid device" is indefinite because "because it does not, 'viewed in light of the specification and prosecution history, inform those skilled in the art about the scope of the invention with reasonable certainty.'" ECF No. 33 at 11 (citing *Nautilus*, 572 U.S. at 910). According to Samsung, because "hybrid device" is not a term of art, it does not have an ordinary

meaning in the field to a POSITA. *Id.* Samsung argues that the disclosure in the abstract. does not clarify if a hybrid device is required to be capable of operating in all three of the modes (PDK only, RDC only, or PDK and RDC) or can still be a hybrid device if it operates in only a subset of the described modes. *Id.* at 12. Samsung further argues that the disclosure in the specification is similarly confusing and does not clarify these issues. Samsung finally argues that claims 2 and 3 of the 188 Patent create some sort of confusion about the "precise boundaries of what is 'on the hybrid device' and what is 'external to the hybrid device.'" ECF No. 37 at 9.

Proxense responds that "hybrid device" is not indefinite. ECF No. 35 at 13. Claim 1 of the 188 and 700 Patents explicitly recite that the claimed "hybrid device" comprises a personal digital key and an integrated receiver decoder circuit. *Id.* Similarly, the method claims of both patents recite a "hybrid device" comprising the same two limitations "the hybrid device including an integrated PDK and the integrated RDC." *Id.* Proxense further responds that the claims use the terms "on" and "external" to reference locations relative to the hybrid device. *Id.*

b. The Court's Analysis

The Court finds that the term is not indefinite and should receive the construction of "A device comprising an integrated personal digital key (PDK) and an integrated receiver-decoder circuit." A POTISA could reasonably ascertain the scope of the claim because the claims explain the required operation of the "hybrid device." Claims 1 and 10 of the 188 Patent and claims 1 and 11 of the 700 Patent state, "one or more of the integrated RDC and integrated PDK enabling one or more an application, a function and a service." An application, function, or service is "enabled" by a PDK when it receives information from a PDK in exchange for an access key. Similarly, an RDC "enable[es] one or more of an application, a function, and a service" when it forwards such a message to the application, function, or service. The claimed "hybrid device" carries out these functions. Dependent claim 2 of the 188 patent further limits claim 1, reciting "one or more of the

application, the function, and the service are enabled at least in part on the hybrid device"; claim 3 adds the limitation that "at least one of the one or more of the application, the function, and the service are enabled at least in part on a device external to the hybrid device and communicatively coupled to the external RDC." Claims 2 and 3 of the 700 Patent recite substantially the same limitations. These limitations are clear.

Samsung admits that it can discern the scope of the claims by pointing out what embodiments are excluded. *See* ECF No 33 at 13–14. Samsung's expert Dr. Nielson only reinforces this admission. As person holding himself out as a PHOSITA, he explains that an "unclaimed embodiment has a hybrid device with only a RDC." ECF No. 33-2 ¶ 93. He could not have determined what the claim excludes without first discerning the scope of the claim. The scope of the claim can therefore be determined (even if some potential embodiments are excluded). And to avoid indefiniteness, that is all a claim needs to do. *See Nautilus Inc. v. Biosig Instruments, Inc.*, 134 S. Ct. 2120, 2129 (2014).

Accordingly, the Court finds that the "hybrid device" term is not indefinite and should receive the construction of "A device comprising an integrated personal digital key (PDK) and an integrated receiver-decoder circuit."

G. Term #7: "personal digital key" (188:1, 10; 700:1, 11)

Claim Term	Plaintiff's Proposed Construction	Defendant's Proposed Construction	Court's Final Construction
personal digital key	An operably connected collection of elements including an antenna and a transceiver for communicating with a RDC and a controller and memory for storing information particular to a user.	A device that includes an antenna, a transceiver for communicating with the RDC and a controller and memory for storing information particular to a user.	An operably connected collection of elements including an antenna and a transceiver for communicating with a RDC and a controller and memory for storing information particular to a user

Claim 1 of the '188 Patent is an illustrative claim and recites the following limitations

(disputed terms in italics):

> 1. A hybrid device comprising:
> an integrated *personal digital key (PDK)* for storing local, secured biometric information for authenticating a user and capable of communicating wirelessly with an external receiver-decoder circuit (RDC); and
> an integrated RDC for communicating wirelessly with at least one external *PDK* within a proximity zone, the integrated RDC coupled to the integrated *PDK* by a first signal line for communication, the integrated RDC coupled to at least one other component of the hybrid device by a second signal line, one or more of the integrated RDC and integrated *PDK* enabling one or more of an application, a function, and a service.

Specifically, the '188 Patent specification describes a minimal embodiment of the PDK:

> In a minimal embodiment, the PDK 102a includes an antenna and a transceiver for communicating with a RDC (not shown) and a controller and memory for storing information particular to a user.

'188 Patent at 14:4-7.

a. The Parties' Positions

The parties' competing constructions do not dispute that a PDK includes an antenna, a transceiver for communicating with a RDC, and a controller and memory for storing information particular to a user. The parties' constructions differ, however, in that Proxense argues for a construction that includes any "operably connected collection of elements," while Samsung's construction defines the PDK as a discrete box/module, or "device."

Samsung contends that "PDK" is not a term of art. According to Samsung, both the figures and the specification consistently depict the PDK as a single discrete device, not a collection of components. ECF No. 33 at 16. Samsung asserts that every single figure in the '188 Patent and '700 Patent depicts the PDK 102 as simply a box or module. *Id.* For example, Samsung relies on

Figure 1 is reproduced below, showing the PDK 102 as a box on the left. *Id.*

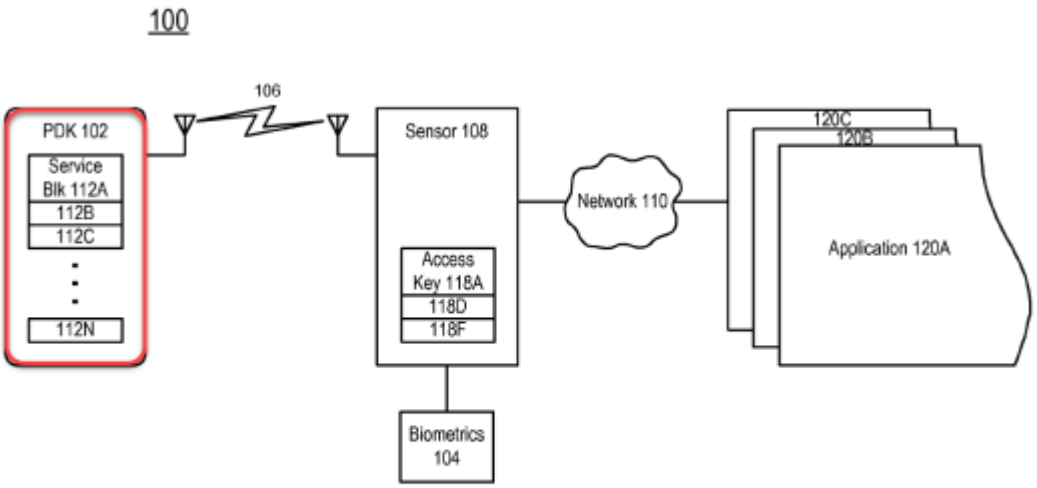

FIG. 1

'188 Figure 1 (annotated).

Id. Samsung further relies on the specification, which states: "[t]he sensor 108 can detect and communicate with the PDK 102 without requiring the owner to remove the PDK 102 from his/her pocket, wallet, purse, etc." *Id.* (citing '188 Patent at 4:1–4).

Proxense responds that its "proposed construction properly reflects the patent's recitation of the elements comprising a personal digital key, which can be an operably connected collection of components integrated into a hybrid device, such as a cell phone." ECF No. 35 at 14. Proxense contends that these elements need not be physically connected by wires, contrary to Samsung's arguments. *Id.* According to Proxense, several examples support its construction. *See id.* For example, the specification explains that the function of a PDK can be implemented in a cell phone where a "hybrid device" has the form factor of a SIM card, and "is merely inserted in place of a conventional SIM card to provide this functionality." '188 Pat. 14:24–32; '700 Pat. 14:49–57. In another example, the PDK function can become part of a cell phone by connecting via "internal

integration or an access port," such that the transceiver and antenna of the PDK are again those of the cell phone into which it is integrated ("the PDK function becomes part of the cell phone" and "the PDK enabled phone uses the back channel to perform other validation/update functions via the cellular infrastructure."). '188 Pat. 15:40–52; '700 Pat. 15:65–16:10. In such embodiments where the hybrid device/PDK function is integrated into a cell phone (e.g., with a SIM card), the transceiver and/or antenna of the PDK is provided by the cell phone, and the memory and controller of the PDK are provided by the SIM card. Proxense further argues that Samsung misinterprets the figures of the '188 and '700 Patents. Other than Figure 10, these figures are all block diagrams. *See* '188 Pat. 2:26–55. A block diagram simply describes the relationships between functional elements of a system; it need not show an actual depiction of any of its components. Here, for example, the boxes in the block diagrams denote the functional relationships of these elements; they are not intended to be indictive of specific physical structures.

b. The Court's Analysis

The Court finds that "personal digital key" should be construed as "An operably connected collection of elements including an antenna and a transceiver for communicating with a RDC and a controller and memory for storing information particular to a user." This construction properly reflects the patent's recitation of the elements comprising a personal digital key, which can be an operably connected collection of components integrated into a hybrid device, such as a cell phone. Several examples from the specification show that Samsung's construction is incorrect. In such embodiments where the hybrid device/PDK function is integrated into a cell phone (e.g., with a SIM card), the transceiver and/or antenna of the PDK is provided by the cell phone, and the memory and controller of the PDK are provided by the SIM card.\

Samsung's argument confuses the recitation of functional elements in a specification with

the explicit teaching of discrete physical structures. For example, Samsung asserts that because claim 1 of Family B requires that "the integrated RDC coupled to the integrated PDK by a first signal line for communication," this must mean that the PDK and RDC be two separate entities each with "discrete physical identity". ECF No. 33 at 17. Family B does not teach that a physical connection for the "signal line" is required or even preferred over other kinds of connections; that specific kind of connection is not a material part of the invention. The above claim language ("the integrated RDC coupled to the integrated PDK by a first signal line for communication") does not exclude an embodiment (such as one of those discussed above) in which this "signal line" is simply one that allows communication among the collective of components that provide the PDK and RDC functions integrated in a hybrid device, like a cell phone. Such an embodiment would, in fact, be consistent with the claim language above, and with the example of a "signal line" providing power that Samsung cites ('188 Pat. 13:25–40; '700 Pat. 13:50–65); cell phones often have a single power source (the battery), that provides power to all of the components contained in the phone, which can be connected. In fact, the specification teaches such an arrangement ("the PDK function becomes part of the cell phone . . . using battery power from the cell phone," '188 Pat. 15:42–45; 700 Pat. 16:1–3). Ignoring these portions of the specification that teach otherwise, Samsung attempts to improperly limit the claims to what Samsung believes are "the disclosed embodiments or examples in the specification." *See Linear Tech. Corp. v. International Trade Comm'n*, 566 F.3d 1049, 1058 (Fed. Cir. 2009).

Accordingly, the Court finds that the "personal digital key" term should receive the construction of "An operably connected collection of elements including an antenna and a transceiver for communicating with a RDC and a controller and memory for storing information particular to a user."

H. Term #8: "biometric information" (188:1, 4, 10, 13; 700:4, 14)

Claim Term	Plaintiff's Proposed Construction	Defendant's Proposed Construction	Court's Final Construction
Biometric information	No construction necessary, plain and ordinary meaning.	The fingerprint, palm print, retinal scan, iris scan, photograph, signature, voice sample, or DNA/RNA information that uniquely identifies an individual.	No construction necessary, plain and ordinary meaning.

Claim 1 of the '188 Patent is an illustrative claim and recites the following limitations (disputed term in italics):

> 1. A hybrid device comprising:
> an integrated personal digital key (PDK) for storing local, secured *biometric information* for authenticating a user and capable of communicating wirelessly with an external receiver-decoder circuit (RDC); and
> an integrated RDC for communicating wirelessly with at least one external PDK within a proximity zone, the integrated RDC coupled to the integrated PDK by a first signal line for communication, the integrated RDC coupled to at least one other component of the hybrid device by a second signal line, one or more of the integrated RDC and integrated PDK enabling one or more of an application, a function, and a service.

Specifically, the '188 Patent specification provides a list of biometric information in some embodiments:

> For example, the biometric input 104 can include a fingerprint, a palm print, a retinal scan, an iris scan, a photograph, a signature, a voice sample or any other biometric information such as DNA, RNA or their derivatives that can uniquely identify the individual.

'188 Patent at 4:10–14.

a. The Parties' Positions

Samsung argues that "the proper construction for 'biometric information' is 'the fingerprint, palm print, retinal scan, iris scan, photograph, signature, voice sample, or DNA/RNA

information that uniquely identifies an individual.'" ECF No. 33 at 19. Samsung contends that its construction clarifies the specific types of information that qualify as biometric information and further specifies the function or purpose of the biometric information (to identify the individual). *Id.* Samsung argues that it is important to clarify because one of the important purposes of the invention is to provide a secure means for authorizing a transaction or enabling a function. Samsung argues its construction also makes clear the biometric information is the specific type of information described in the specification, and not downstream information used during the authorization process. *Id.*

Proxense responds that "biometric information" should receive its plain and ordinary meaning because it is a commonly used term referring to information representing physical or behavioral characteristics unique to an individual. ECF No. 35 at 17. According to Proxense, Samsung has offered no claim construction canon to justify restricting this term to a delineated list of specific kinds of biometric information. *Id.* Proxense argues that Samsung ignores the fact that treating this exemplary and open-ended disclosure as limiting would improperly read an embodiment from the specification into the claim. *Id.* at 18. And Proxense further contends that Samsung omits the initial sentence "biometric input 104 comprises a representation of physical or behavioral characteristics unique to the individual from the example," and thus fails to address the specification's more expansive disclosure regarding "biometric data." *Id.*

b. The Court's Analysis

The Court finds that "biometric information" does not need construction and should receive its plain and ordinary meaning. The term "biometric information" should receive its plain and ordinary meaning because it is a commonly used term referring to information representing physical or behavioral characteristics unique to an individual. Treating the portion of the

specification that Samsung relies on as a limited list improperly reads an embodiment from the specification into the claim. Indeed, the very list Samsung quotes also includes derivatives of DNA/RNA, but Defendants' construction would exclude those. *See* '188 Patent at 4:10–14. Thus, Defendants' proposed construction would be improper. Because Samsung has offered no claim construction canon to justify restricting this term to a delineated list of specific kinds of biometric information, the Court declines to find that a construction is required for this term. Instead, the Court finds that this term should receive its plain and ordinary meaning.

Accordingly, the Court finds that the "biometric information" term does not need to be construed and receives its plain and ordinary meaning.

I. Term #9: "financial information" (188:5, 6, 14, 17; 700:1, 5, 6, 11, 15, 18)

Claim Term	Plaintiff's Proposed Construction	Defendant's Proposed Construction	Court's Final Construction
"financial information"	No construction necessary, plain and ordinary meaning. Alternatively, information about the transaction utilized to verify, authorize, or complete a transaction.	Purchasing account numbers, such as the debit card, ATM card, or bank account numbers.	No construction necessary, plain and ordinary meaning.

Claim 5 of the '188 Patent is an illustrative claim and recites the following limitations (disputed term in italics):

> 5. The hybrid device of claim 1, wherein the integrated PDK stores local, secured *financial information*.

As an example of the disputed term, the '188 Patent specification states the following:

> Alternatively, a different database may be used to validate different types of purchasing means such as a debit card, ATM card, or bank account number.

'188 Patent at 5:22–25.

a. The Parties' Positions

Samsung contends that its construction is based on the specification. ECF No. 33 at 20. According to Samsung, in the specification, the examples of financial information listed are the ones in Samsung's proposed construction. *Id.* Samsung contends that its construction captures the purchase account information, including the specific types of account numbers listed in the specification. *Id.* Samsung further contends that Proxense's construction is too open-ended and vague because "[n]ot all information about a transaction is financial information." *Id.*

Proxense responds that the term "financial information" is a common and easily understood term that a jury will have no difficulty understanding, and therefore, the Court should adopt the plain and ordinary meaning of the term here. ECF No. 35 at 19. According to Proxense, the shared specification of the 188 and 700 Patents details various embodiments in which the financial information is utilized to verify, authorize, and/or complete a transaction. *Id.* (citing 188 Pat. 6:41–59; 8:30–42; 9:21–26; 16:25–28). While the financial information may include "account numbers," Proxense contends that the shared specification does not limit the financial information to account numbers, as Samsung claims it does. *Id.* Other information, such as a stand-in for account numbers, would equally qualify as "financial information" according to Proxense. *Id.*

b. The Court's Analysis

The Court finds that this term should receive its plain and ordinary meaning. Samsung fails to adequately demonstrate why the Court should depart from the default rule that would define this simple term according to its plain and ordinary meaning. This term is not a complex or technical term, and it is within the everyday experiences of jurors. Nothing in the specification warrants a departure from its plain and ordinary meaning. Defendants' construction is too limiting,

as the specification has other examples of financial information that is not just account numbers. Samsung's strictly constrained definition improperly excludes commonly understood aspects of the term that are listed in the specification

Accordingly, the Court finds that the "financial information" term does not need to be construed and receives its plain and ordinary meaning.

J. Term #10: "receiver-decoder circuit" (188: 1, 10; 700:1, 11)

Claim Term	Plaintiff's Proposed Construction	Defendant's Proposed Construction	Court's Final Construction
"receiver-decoder circuit"	A component or collection of components, capable of wirelessly receiving data in an encrypted format and decoding the encrypted data for processing.	A device that provides a wireless interface to the PDK.	A component or collection of components, capable of wirelessly receiving data in an encrypted format and decoding the encrypted data for processing.

Claim 1 of the '188 Patent is an illustrative claim and recites the following limitations (disputed term in italics):

> 1. A hybrid device comprising:
> an integrated personal digital key (PDK) for storing local, secured biometric information for authenticating a user and capable of communicating wirelessly with an external *receiver-decoder circuit (RDC)*; and
> an integrated *RDC* for communicating wirelessly with at least one external PDK within a proximity zone, the integrated *RDC* coupled to the integrated PDK by a first signal line for communication, the integrated *RDC* coupled to at least one other component of the hybrid device by a second signal line, one or more of the integrated *RDC* and integrated PDK enabling one or more of an application, a function, and a service.

a. The Parties' Positions

The parties dispute here is similar to the dispute above with regard to the "PDK" term. The parties' major dispute with respect to this term is whether the "receiver decoder circuit," or "RDC"

can comprise a collection of components (as contemplated by Proxense's proposed construction), or whether it is restricted to a monolithic "device" (as Samsung argues).

Samsung relies on an embodiment in the specification that describes that the RDC is connected directly to the PDK by a signal line. ECF No. 33 at 22 (citing '188 Patent at 13:25-29). According to Samsung, the description uses the phrase "direct coupling" by the signal line 1104, which does not make sense if the RDC were a collection of components and not a single device. *Id.* In a collection of separate components, Samsung argues that there would need to be multiple connections for each of the components and the coupling would not be direct, but indirect. *Id.* Samsung further relies on one embodiment for its construction. Samsung relies on a statement in the specification for one embodiment that states that "[t]he RDC 304 provides the wireless interface to the PDK 102." *Id.*

By contrast, Proxense argues that the name "receiver decoder circuit" indicates a circuit generally, not a discrete entity like a single "device." ECF No. 35 at 20. According to Proxense, Samsung misconstrues the meaning of "direct coupling" because direct coupling allows the RDC and PDK of the hybrid device to communicate such that the signals are not processed by any intermediary component. *Id.* at 21. Yet, Proxense argues that according to Samsung, if the RDC were a collection of components, "there would need to be multiple connections for each of the components and the coupling would not be direct, but indirect". *Id.* Proxense further argues that the claims do not limit coupling between the RDC and PDK to a direct coupling. *Id.* Rather, claim 1 of the '188 and '700 Patents recites: "the integrated RDC coupled to the integrated PDK by a first signal line for communication." *Id.* All the claim requires is a communicative coupling between the RDC and PDK according to Proxense. Proxense further contends that Samsung's construction is also flawed as it restricts RDC to "provid[ing] a wireless interface." Claim 1 of

each patent does not so limit the RDC, i.e., "the integrated RDC coupled to the integrated PDK by a first signal line for communication." *Id.*

b. The Court's Analysis

The Court finds that the term "receiver-decoder circuit" should be construed as "A component or collection of components, capable of wirelessly receiving data in an encrypted format and decoding the encrypted data for processing." Like the Court did for the PDK term above, the Court finds that Samsung has not sufficiently shown that the RDC is a singular monolithic device. Just as it did with PDK, Plaintiff cited examples in the specification that do not require the RDC to be a separate and distinct device. Defendants' construction is therefore overly limiting. Defendants' justification for a single device also comes from just one embodiment, which likely just describes the functional elements of the RDC rather than depict specific physical structures.

Accordingly, the term "receiver-decoder circuit" should be construed as "A component or collection of components, capable of wirelessly receiving data in an encrypted format and decoding the encrypted data for processing."

K. Term #11: "inheritance information" (188: 9, 18; 700: 9, 19)

Claim Term	Plaintiff's Proposed Construction	Defendant's Proposed Construction	Court's Final Construction
"inheritance information"	Information passed from a first device to a second device for use by the second device.	Information that is received from a predecessor device.	Information passed from a first device to a second device for use by the second device.

Claim 9 of the '188 Patent is an illustrative claim and recites the following limitations (disputed term in italics):

9. The hybrid device of claim 1, comprising a storage for

inheritance information.

The specification defines authorization inheritance as "when a first device passes selected information to a second device and the second device then 'inherits' that information for use." '188 Pat., 17:46-49.

The Court finds that "inheritance information" should be construed as "Information passed from a first device to a second device for use by the second device." This construction of "inheritance information" comes directly from the specification of the '188 and '700 patents. FIG. 16 "is a block diagram of one embodiment of a system using the hybrid device for authorization inheritance". '188 Pat. 2:53-55. Three specific types of inheritance (used for authorization inheritance) depicted in FIG. 16 include: (1) Service Inheritance (2) Feature Inheritance, and (3) Personality Inheritance. The specification defines authorization inheritance as "when a first device passes selected information to a second device and the second device then 'inherits' that information for use." '188 Pat., 17:46-49. In accordance with this definition, "inheritance information" would be "information passed from a first device to a second device for use by the second device"—which is Proxense's proposed construction and the construction this Court adopts.

Samsung proposes a construction that it contends is "consistent with the ordinary meaning of the word 'inheritance.'" ECF No. 33 at 25. This is improper. Samsung does not explain why the definition of "inheritance" recited in Samsung's extrinsic evidence should supplant the plain meaning of the term "inheritance information" as defined by the intrinsic evidence in the specification. *3M Innovative Properties Co. v. Tredegar Corp.*, 725 F.3d 1315, 1321 (Fed. Cir. 2013) (finding that courts may not rely on dictionary definitions where there is a contradiction "found or ascertained by a reading of the patent documents").

Proxense's construction accounts for the predecessor/successor paradigm. Samsung

criticizes Proxense' construction for "missing the notion of a predecessor whose characteristics or features are passed onto a successor". ECF No. 33 at 25. But Proxense's construction does entail a "predecessor" (i.e., a first device) and a "successor" (i.e., a second device that will use the information). The "characteristics or features" comprises the proposed "information passed" language, which is passed between devices for use by the second device as required by the specification. '188 Pat. 17:46-49.

According, the Court adopts Proxense's proposed construction for the term "inheritance information" and finds that it should be construed as "Information passed from a first device to a second device for use by the second device."

L. Term #12: "enablement signal" (188: 10-12, 17; 700: 11-13,18)

Claim Term	Plaintiff's Proposed Construction	Defendant's Proposed Construction	Court's Final Construction
"enablement signal"	A message that enables or authorizes	No construction needed. Alternatively, a signal that authorizes.	No construction needed.

Claim 10 of the '188 Patent is an illustrative claim and recites the following limitations (disputed term in italics):

> 10. A method comprising:
> creating a first wireless link between an integrated receiver-decoder circuit (RDC) of a hybrid device and an external personal digital key (PDK), the hybrid device including an integrated PDK and the integrated RDC, wherein the integrated PDK stores local, secured biometric information for authenticating a user;
> receiving a first signal at the integrated RDC via the first wireless link from the external PDK;
> generating an *enablement signal* enabling one or more of an application, a function and a service.

The specification describes the use of the enablement signal as follows:

> Referring now to FIG. 15, one embodiment of a system 1500

> that uses multiple PDK links 1502, 1504 to the hybrid device 1102 to generate an authorization signal is shown. For the system 1500, only when multiple PDK links 1502, 1504 to the hybrid device 1102 exist, will an authorization enablement signal be generated on signal line 1506. Again, in this embodiment, the hybrid device 1102 has a physical output or connection for providing the authorization signal.

'188 Pat., 17:21–28.

a. The Parties' Positions

Samsung contends that it does not believe this term needs to be construed, as it is used according to its plain meaning.

Proxense responds that there should be a construction for "enablement signal" because the term only appears in the claims of the 188 and 700 Patents (as opposed to "authorization enablement signal" which appears in the common specification). To avoid potential confusion, Proxense submits this construction such that both the "authorization enablement signal" (to which Samsung refers in its construction) and "enable signal" in other embodiments described in the specification are understood correctly in their context.

b. The Court's Analysis

The Court finds that this term does not need construction. Proxense fails to adequately demonstrate why the Court should depart from the default rule that would define this simple term according to its plain and ordinary meaning. This term is not a complex term and jurors are not likely to be confused. Nothing in the specification warrants a departure from its plain and ordinary meaning. Plaintiff's construction is too limiting. Accordingly, the Court finds that the "enablement signal" term does not need to be construed and receives its plain and ordinary meaning.

V. CONCLUSION

The Court adopts the constructions listed in the Claim Construction Order concurrent with

this memorandum. Furthermore, the Parties should ensure that all testimony that relates to the terms addressed in this memorandum is constrained by the Court's reasoning. However, in the presence of the jury the Parties should not expressly or implicitly refer to each other's claim construction positions and should not expressly refer to any portion of this memorandum that is not an actual construction adopted by the Court. The references to the claim construction process should be limited to informing the jury of the constructions adopted by the Court.

SIGNED this 28th day of December, 2022.

ALAN D ALBRIGHT
UNITED STATES DISTRICT JUDGE