Absorbent layer: Air formed NB416 pulp fluff, 430 gsm and 0.07 g/cc with a width of 6.0 cm in the target area, 7.0 cm on the product lobes and length of 20.0 cm.

Second absorbent : Air formed NB416 pulp fluff, 400 gsm with a density of 0.09 g/cc having a width of 4.5 cm and a length of 16.0 cm.

The product backing was a polyethylene film layer of 1.1 mils used as a fluid containment device. This layer is attached to the absorbent layer using 40 gsm of a hotmelt adhesive. The backing layer was 8 cm wide at the target area, 9 cm at the lobes with a length of 22 cm.

Example 8:

These Absorbent prototypes were assembled with cover adhesive with an add-on level of 2-3 gsm forming a KOTEX® MAXI® product with SAFETY ZONE® as currently sold in the US market by the Kimberly-Clark Corporation.

The cover layer and intake/distribution layer only were co-apertured using a pin aperturing process using a pin roller and another (female) roller, resulting in an aperture open area of 14 percent having 8 holes /cm^2. The temperatures used were 280° F (138° C) on the pin roll and 170° F (77° C) on the female roll at a speed of 40 feet/minute.

Cover layer: 20.3 gsm (0.6 osy) ESCORENE® PD-3445 polypropylene spunbond nonwoven fabric, 3.5 dpf. Treated with 0.5 volume percent AHCOVEL® surfactant topically applied.

Intake/distribution layer: 90 weight percent NB416 pulp and 10 weight percent KoSa T-255 binder fiber, 250 gsm with a density of 0.14 g/cc. This layer was 9.4 cm cm by 15.6 cm.

Transfer delay layer: 27.1 gsm (0.8 osy), 2.8 dpf ESCORENE® PD-3445 polypropylene spunbond nonwoven fabric with 0.3 volume percent AHCOVEL® surfactant. This layer was 9.4 cm by 15.6 cm.

Absorbent layer: Air formed NB416 pulp fluff, 430 gsm and 0.07 g/cc with a width of 6.0 cm in the target area, 7.0 cm on the product lobes and length of 20.0 cm.

Second absorbent : Air formed NB416 pulp fluff, 400 gsm with a density of 0.09 g/cc having a width of 4.5 cm and a length of 16.0 cm.

The product backing was a polyethylene film layer of 1.1 mils used as a fluid containment device. This layer was attached to the absorbent layer using 40 gsm of a hotmelt adhesive. The backing layer was 8 cm wide at the target area, 9 cm at the lobes with a length of 22 cm.

The results of testing of the above described materials according to the intake and rewet tests shown above are in Table 2.

Table 2

Example	Intake Time (Seconds)	Re-wet (Grams)
5	67.17	0.13
6	33.52	0.16
7	113	0.09
8	41.11	0.09

As seen from these results, co-aperturing the materials showed a significant reduction in the absorption time of a single insult without affecting the re-wet values. It's the belief of the inventors that by providing a system that will provide a faster intake time, the run-off of the fluid from the cover is reduced, which also reduces the chance for the fluid to wick through the liner and the users body causing it to leak.

Co-aperturing of different product layers allows the product developer to control which layer should distribute or absorb fluid and to what degree. Table 3 provides Fluid Distribution Test data for Examples 5 – 8, showing the percentage of fluid retained in each layer. (Examples 6 and 8 were co-apertured).

Table 3

Example	Fluid retained in Intake/distribution layer	Fluid retained in first absorbent layer	Fluid retained in secondary absorbent layer
5	72.14	27.85	N/A
6	47.35	52.64	N/A
7	71.36	23.55	5.08
8	56.20	31.70	12.06

As can be seen from the data in Table 3, the co-apertured systems allowed better fluid distribution to the lower, absorbent layers, allowing the fluid to stay farther away from the cover and so producing a dryer surface for the wearer and more effectively using the total absorbent capacity of the product. The amount of fluid in the intake/distribution versus the combined absorbent layers may be expressed as a ratio, in this case a fluid partitioning ratio. The fluid partitioning ratio for materials according to this invention should be between 70/30 and 20/80, or more preferably between 60/40 and 20/80.

Clearly, the choice of raw materials and the choice of layers to be co-apertured determines how well a product will perform. One area in which this invention shows benefit is in a system having higher density absorbents closer to the cover. Such systems provide resiliency to the product to reduce bunching and twisting during use and tend to distribute fluid preferentially in the X-Y plane. This allows for the more effective absorption of multiple insults.

One skilled in the art may readily envision a product with different material densities and absorption properties that could benefit from co-aperturing of selected layers to allow faster absorption and fluid retention in preferred areas of the product. Aperturing configurations may be designed for different layers to improve fluid movement throughout the product.

Still other examples in which the cover was co-apertured with the intake layer can be seen in the following examples:

Example 9:

Cover layer: 20.3 gsm (0.6 osy) polypropylene spunbond nonwoven fabric, 3.5 dpf. Treated with 0.3 volume percent AHCOVEL® surfactant topically applied.

Intake/distribution layer: 90 weight percent NB416 pulp and 10 weight percent KoSa T-255 binder fiber, 175 gsm with a density of 0.14 g/cc. This layer had a width of 19.0 cm and a length of 37 cm.

Transfer delay layer: 27.1 gsm (0.8 osy), 2.8 dpf ESCORENE® PD-3445 polypropylene spunbond nonwoven fabric with 0.3 volume percent AHCOVEL® surfactant. This layer had a length of 20.6 cm and a width of 4.8 cm

Absorbent layer: Air formed NB416 pulp fluff, 500 gsm, 0.09 g/cc, with a length of 20.6 cm and a width of 4.8 cm. A lower fluff with a basis weight of 600 gsm with 0.09 g/cc of density having a length of 29.5 cm, a width at the center of 6.5 cm and at the lobes of 7.5 cm

The product backing was a polyethylene film layer of 1.1 mils used as a fluid containment device. This layer was attached to the absorbent layer using 40 gsm of a hotmelt adhesive. The backing layer was 8.5 cm wide at the target area, 9.5 cm at the lobes with a length of 31.5 cm.

Example 10:

The cover layer and intake/distribution layer only were co-apertured using a pin aperturing process using a pin roller and another (female) roller, resulting in an aperture open area of 14 percent having 8 holes /cm^2. The temperatures used were 280° F (138° C) on the pin roll and 170° F (77° C) on the female roll at a speed of 40 feet/minute.

Cover layer: 20.3 gsm (0.6 osy) polypropylene spunbond nonwoven fabric, 3.5 dpf. Treated with 0.3 volume percent AHCOVEL® surfactant topically applied.

Intake/distribution layer: 90 weight percent NB416 pulp and 10 weight percent KoSa T-255 binder fiber, 175 gsm with a density of 0.14 g/cc. This layer had a width of 19.0 cm and a length of 37 cm.

Transfer delay layer: 27.1 gsm (0.8 osy), 2.8 dpf ESCORENE® PD-3445 polypropylene spunbond nonwoven fabric with 0.3 volume percent AHCOVEL® surfactant. This layer had a length of 20.6 cm and a width of 4.8 cm

Absorbent layer: Air formed NB416 pulp fluff, 500 gsm, 0.09 g/cc, with a length of 20.6 cm and a width of 4.8 cm and a lower fluff layer with a basis weight of 600 gsm with 0.09 g/cc of density having a length of 29.5 cm a width at the center of 6.5 cm and on the lobes of 7.5 cm .

The product backing was a polyethylene film layer of 1.1 mils used as a fluid containment device. This layer was attached to the absorbent layer using 40 gsm of a hotmelt adhesive. The backing layer was 8.5 cm wide at the target area, 9.5 cm at the lobes with a length of 31.5 cm.

Example 11:

The cover layer and intake/distribution layer only were co-apertured using a pin aperturing process using a pin roller and another (female) roller, resulting in an aperture open area of 14 percent having 8 holes /cm^2. The temperatures used were 280° F (138° C) on the pin roll and 170° F (77° C) on the female roll at a speed of 40 feet/minute.

Cover layer: 20.3 gsm (0.6 osy) ESCORENE® PD-3445 polypropylene spunbond nonwoven fabric, 3.5 dpf. Treated with 0.3 volume percent AHCOVEL® surfactant topically applied.

Surge layer: 23.7 gsm (0.7 osy) 6 dpf ESCORENE® PD-3445 polypropylene spunbond nonwoven fabric polypropylene fiber web with HR6 finish. Fibers with finish available from Chisso Corp. This layer had a width of 19.0 cm and a length of 37 cm with a thickness of 1.3 mm

Intake/distribution layer: 90 weight percent NB416 pulp and 10 weight percent KoSa T-255 binder fiber, 175 gsm with a density of 0.14 g/cc. This layer had a width of 19.0 cm and a length of 37 cm.

Transfer delay layer: 27.1 gsm (0.8 osy), 2.8 dpf ESCORENE® PD-3445 polypropylene spunbond nonwoven fabric with 0.3 volume percent AHCOVEL® surfactant. This layer had a length of 20.6 cm and a width of 4.8 cm

Absorbent layer: Air formed NB416 pulp fluff, 500 gsm, 0.09 g/cc, with a length of 20.6 cm and a width of 4.8 cm, and a lower fluff layer with a basis weight of 600 gsm, 0.09 g/cc, having a length of 29.5 cm a width at the center of 6.5 cm and on the lobes of 7.5 cm .

The product backing was a polyethylene film layer of 1.1 mils used as a fluid containment device. This layer was attached to the absorbent layer using 40 gsm of a hotmelt adhesive. The backing layer was 8.5 cm wide at the target area, 9.5 cm at the lobes with a length of 31.5 cm.

Example 12:

The intake/distribution and transfer delay layers were co-apertured using a pin aperturing process using a pin roller and another (female) roller, resulting in an aperture open area of 14 percent having 8 holes /cm^2. The temperatures used were 280° F (138° C) on the pin roll and 170° F (77° C) on the female roll at a speed of 50 feet/minute.

Cover layer: vacuum apertured polyethylene film with 17 percent open area, 100 holes/cm^2, 19 gsm.

Intake/distribution layer: 90 weight percent NB416 pulp and 10 weight percent KoSa T-255 binder fiber, 175 gsm with a density of 0.14 g/cc. This layer had a width of 19.0 cm and a length of 37 cm.

Transfer delay layer: 27.1 gsm (0.8 osy), 2.8 dpf ESCORENE® PD-3445 polypropylene spunbond nonwoven fabric with 0.3 volume percent AHCOVEL® surfactant. This layer had a length of 20.6 cm and a width of 4.8 cm

Absorbent layer: Air formed NB416 pulp fluff, 500 gsm, 0.09 g/cc, with a length of 20.6 cm and a width of 4.8 cm, and a lower fluff layer with a basis weight of 600 gsm with 0.09 g/cc of density having a length of 29.5 cm, a width at the target area of 6.5 cm and on the lobes of 7.5 cm.

The product backing was a polyethylene film layer of 1.1 mils used as a fluid containment device. This layer was attached to the absorbent layer using 40 gsm of a hotmelt adhesive. The backing layer was 8.5 cm wide at the target area, 9.5 cm at the lobes with a length of 31.5 cm.

The Examples above were subjected to testing according to the triple intake and rewet tests described above and the results are shown in Table 4.

Table 4

Example	Intake Time 1st Insult (Seconds)	Intake Time 2nd Insult (Seconds)	Intake Time 3rd Insult (Seconds)	Re-wet (Grams)
9	43	58	132	0.45
10	41	49	98	0.19
11	8	13	23	0.15
12	12	17	24	0.03

As seen from these examples; in the multiple insult situation co-aperturing of the cover with different absorbent layers has shown an advantage in reducing the material intake time. In Example 10, for example, further optimization of the open area available and the treatment could be made in order to further reduce the intake time of the system. What can be also seen in this data is that the materials having a larger void volume in the cover generally have a faster intake time for multiple insults showing a significant reduction compared to the un-apertured absorption system.

As will be appreciated by those skilled in the art, changes and variations to the invention are considered to be within the ability of those skilled in the art. Such changes and variations are intended by the inventors to be within the scope of the invention.

What is claimed is:

1) A system for a hygienic product comprising a cover layer adjacent an intake/distribution layer which on the side opposite said cover layer is adjacent an absorbent core, wherein said cover and intake/distribution layers are co-apertured.

2) The system of claim 1 further comprising a transfer delay layer between said intake/distribution layer and said absorbent core.

3) The system of claim 1 having an open area from 2 to 25 percent and having apertures smaller than 19.6 mm^2 in area.

4) The system of claim 3 that has third insult intake time lower than 35 seconds.

5) The system of claim 3 that has a re-wet value of less than 0.3 grams.

6) The system of claim 1 wherein said intake /distribution layer has a basis weight between 50 and 500 gsm.

7) The system of claim 1 wherein said cover material is treated with a wettable surfactant.

8) The system of claim 1 wherein said cover material is treated with a skin wellness additive.

9) The system of claim 1 wherein said cover material is an embossed nonwoven fabric.

10) The system of claim 1 wherein said system has a fluid partitioning ratio of between 60/40 and 20/80.

11) A feminine hygiene pad comprising a nonwoven cover layer, intake/distribution layer and absorbent layer wherein said cover layer and said intake/distribution layer are co-apertured.

12) The pad of claim 11 further comprising a transfer delay layer adjacent said absorbent core.

13) The pad of claim 12 wherein said transfer delay layer is a material selected from the group consisting of spunbond fabric, meltblown fabric, carded fabric and films.

14) The pad of claim 11 wherein said transfer delay layer is a spunbond fabric with a basis weight between about 15 and 50 gsm.

15) The pad of claim11 wherein said intake/distribution layer is a material selected from the group consisting of airlaid fabric, bonded carded webs, coform materials, hydroentangled pulp fabrics and meltblown fabrics.

16) The pad of claim 11 wherein said intake/distribution layer is an airlaid fabric having a basis weight between about 100 and 300 gsm and a density between about 0.06 and 0.18 g/cc.

17) The pad of claim 11 wherein said cover, intake/distribution and transfer delay layers are co-apertured at a density of between about 1 and 15 apertures/cm^2.

18) The pad of claim 11 further comprising a surge layer between said cover and intake/distribution layers.

19) The pad of claim 18 wherein said cover, surge and intake/distribution layers are co-apertured at a density of between about 1 and 15 apertures/cm^2.

20) A feminine hygiene pad comprising a polypropylene fiber nonwoven fabric cover layer, a pulp and binder fiber intake/distribution layer having a density between about 0.09 and 0.19 g/cc and a basis weight of between about 100 and 300 gsm, a nonwoven fabric transfer delay layer, a first absorbent layer comprising pulp fluff having a density between about 0.05 and 0.10 g/cc and a basis weight between 150 and 500 gsm, and a secondary absorbent layer comprising pulp fluff and having a density less than said first absorbent layer, wherein said layers are co-apertured at a density of from 1- 15 apertures/cm^2.

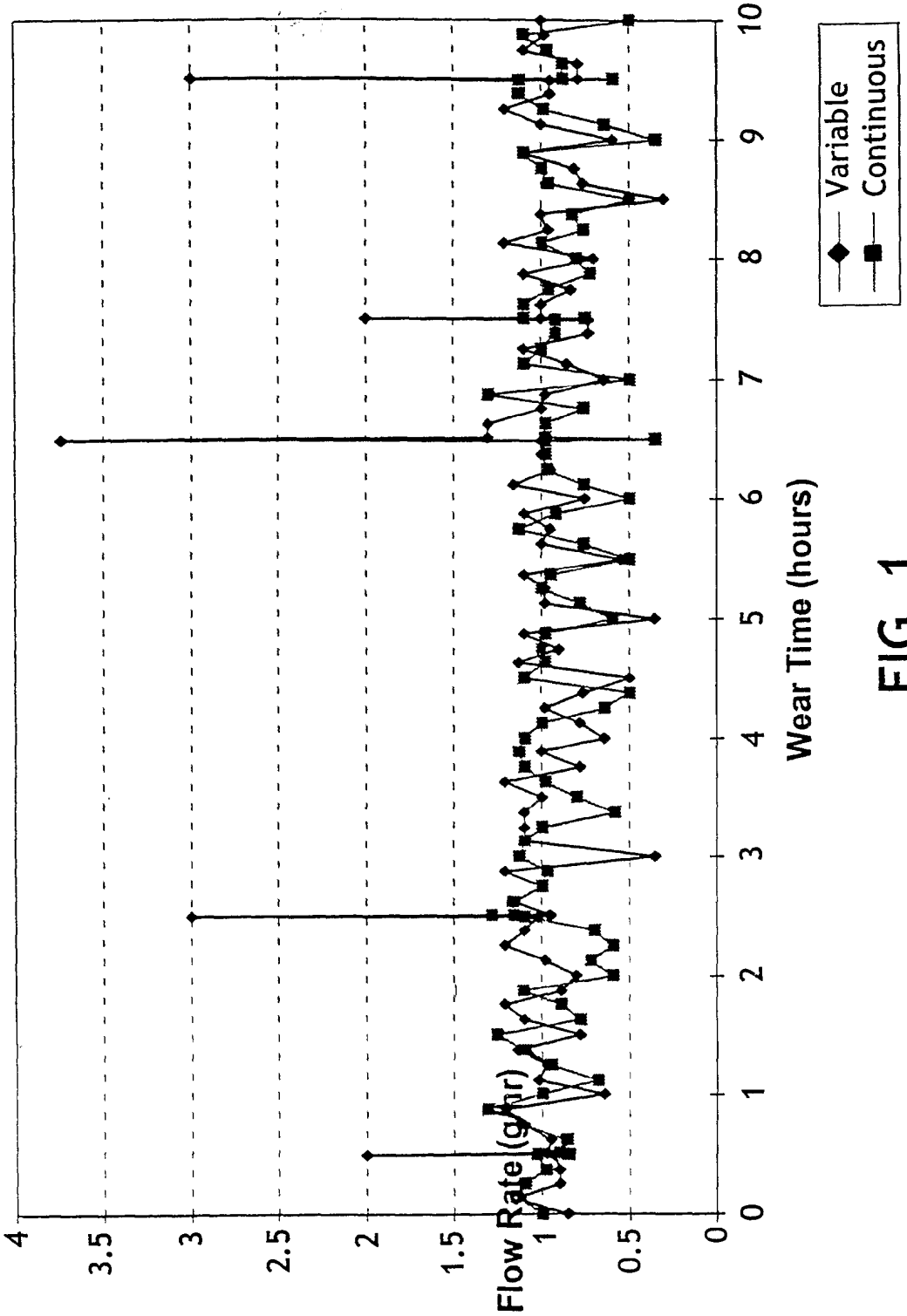
Flow Rate (g/hr)
4
3.5
3
2.5
2
1.5
1
0.5
0
0
1
2
3
4
5
6
7
8
9
10
Wear Time (hours)
Variable
Continuous

FIG. 1

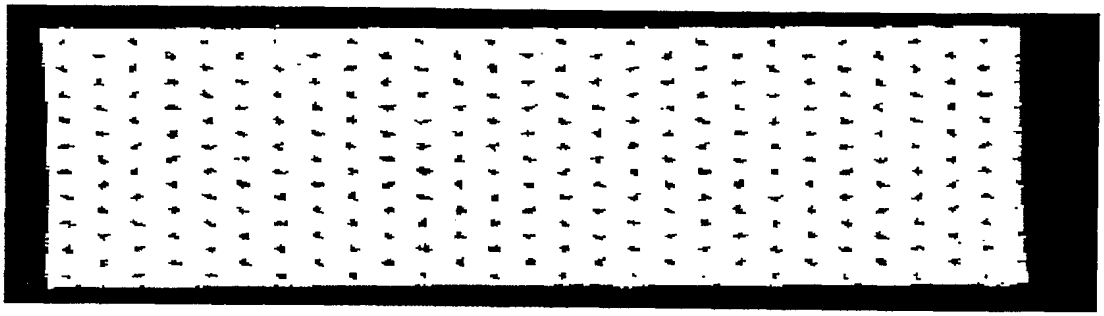

FIG. 2

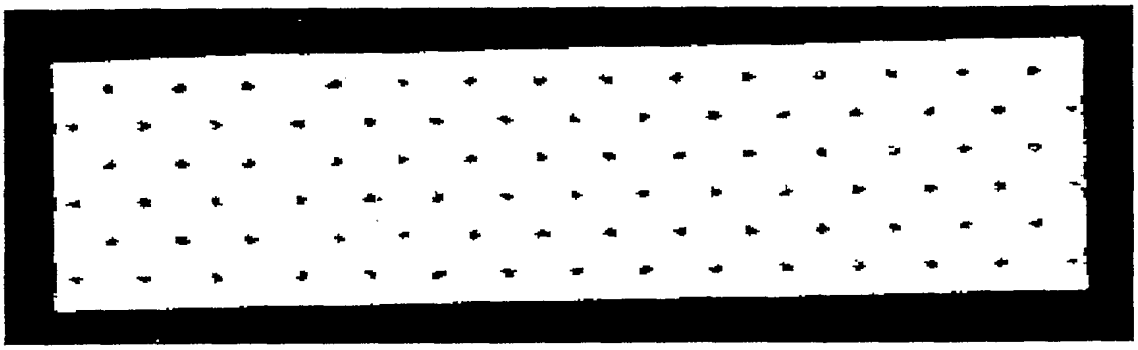

FIG. 3

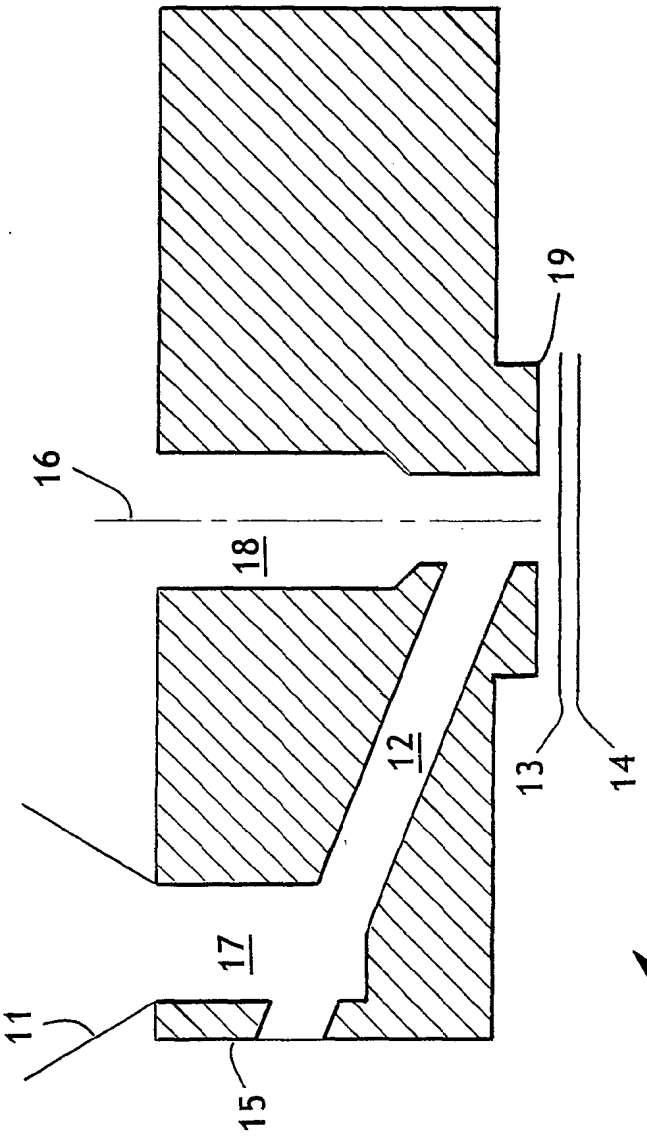

FIG. 4

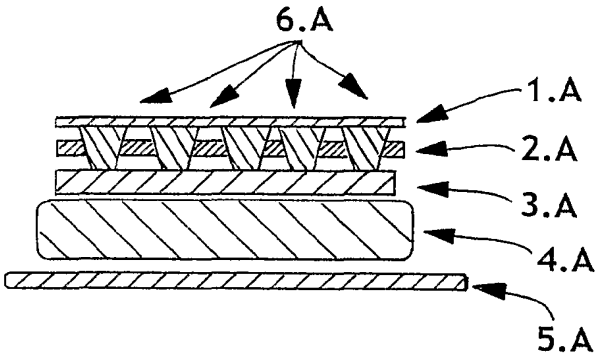

FIG. 5

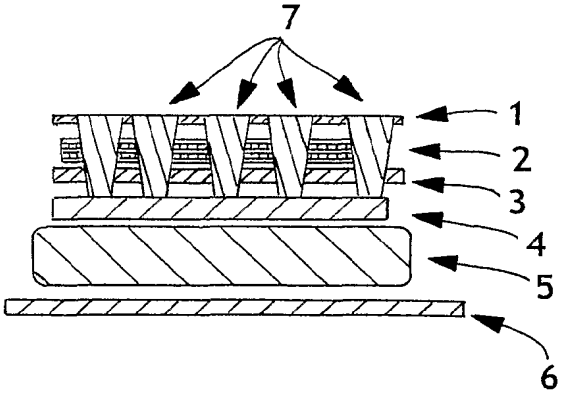

FIG. 6

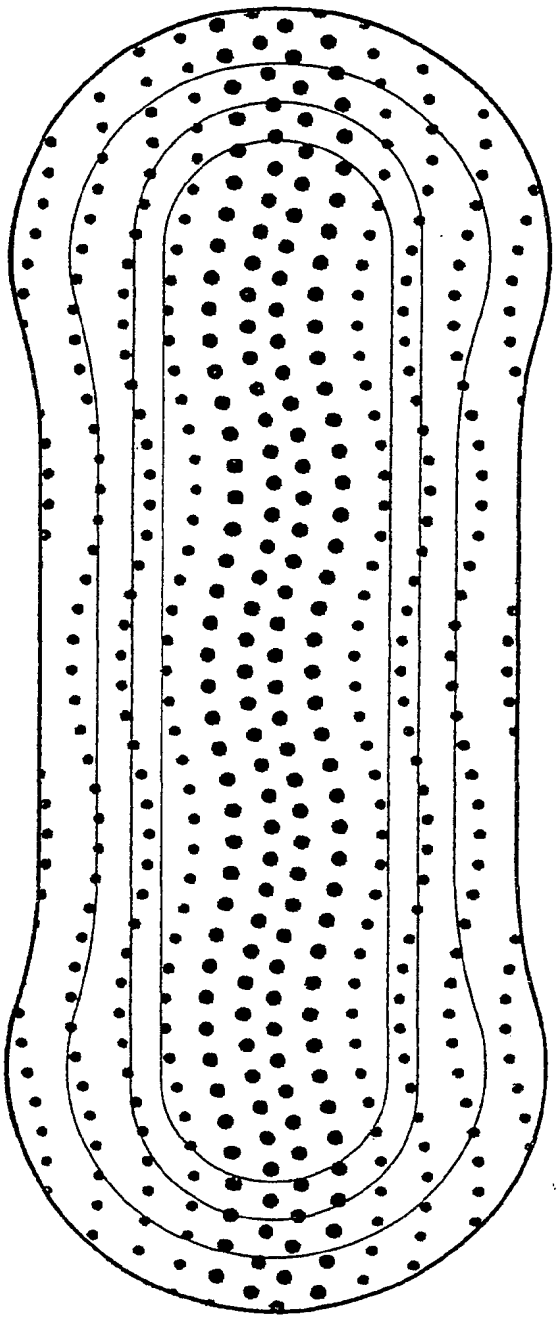

FIG. 7

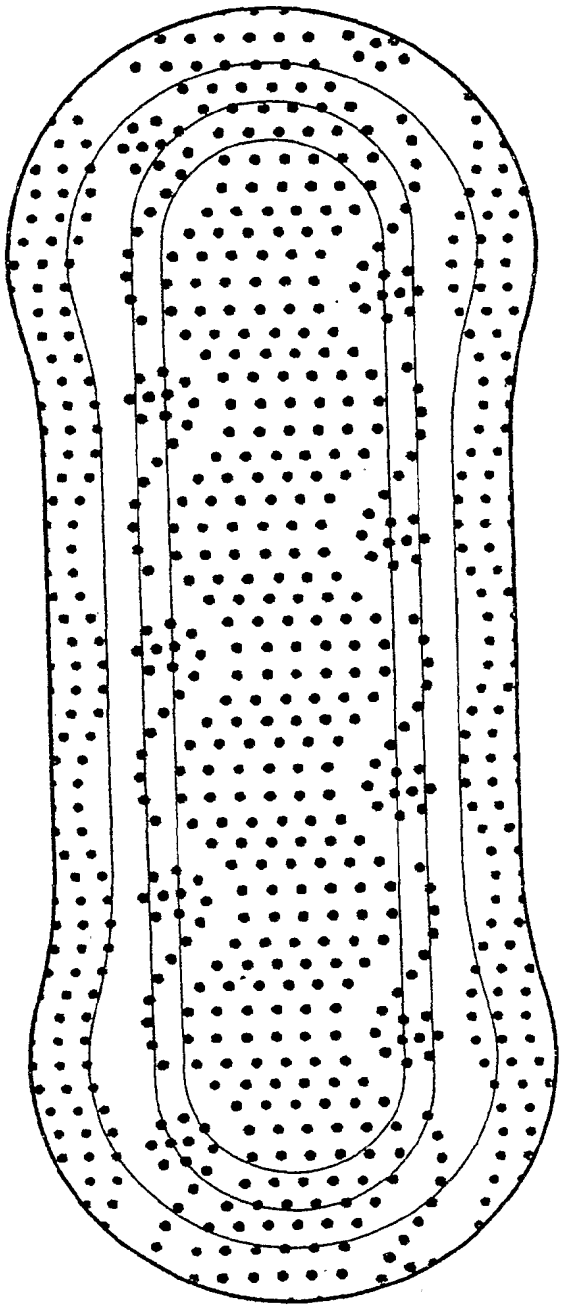

FIG. 8

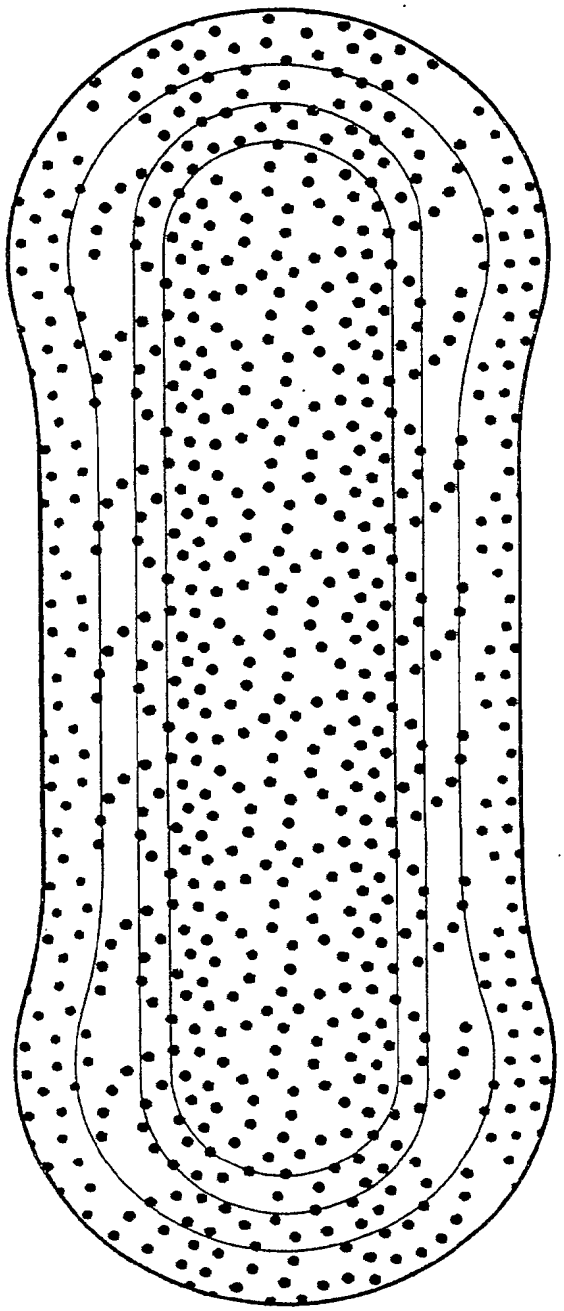

FIG. 9

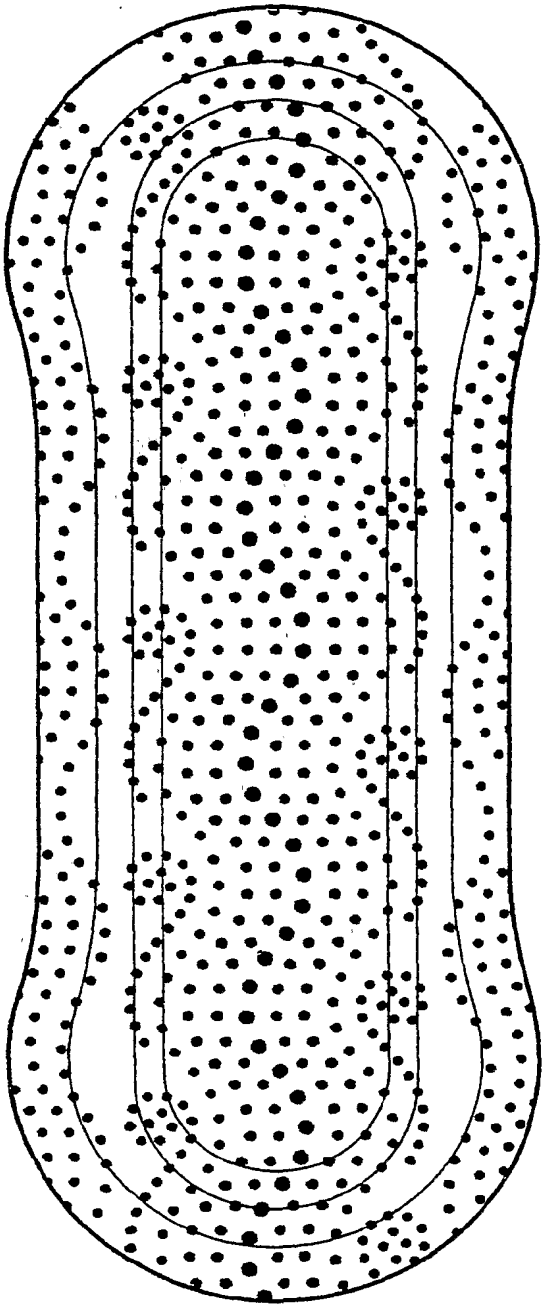

FIG. 10

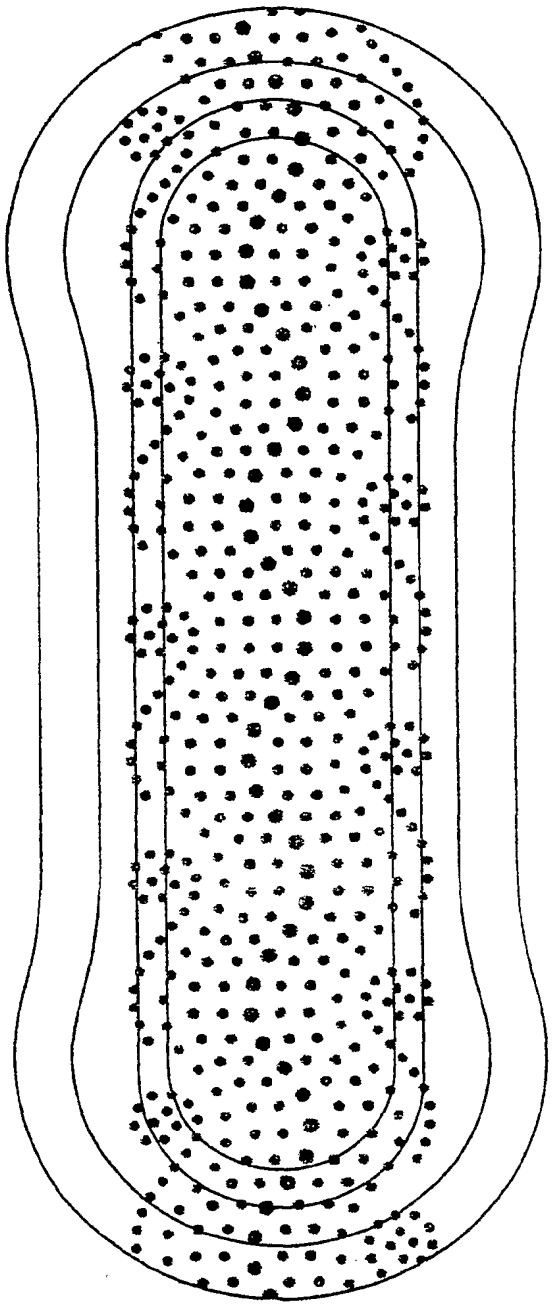

FIG. 11

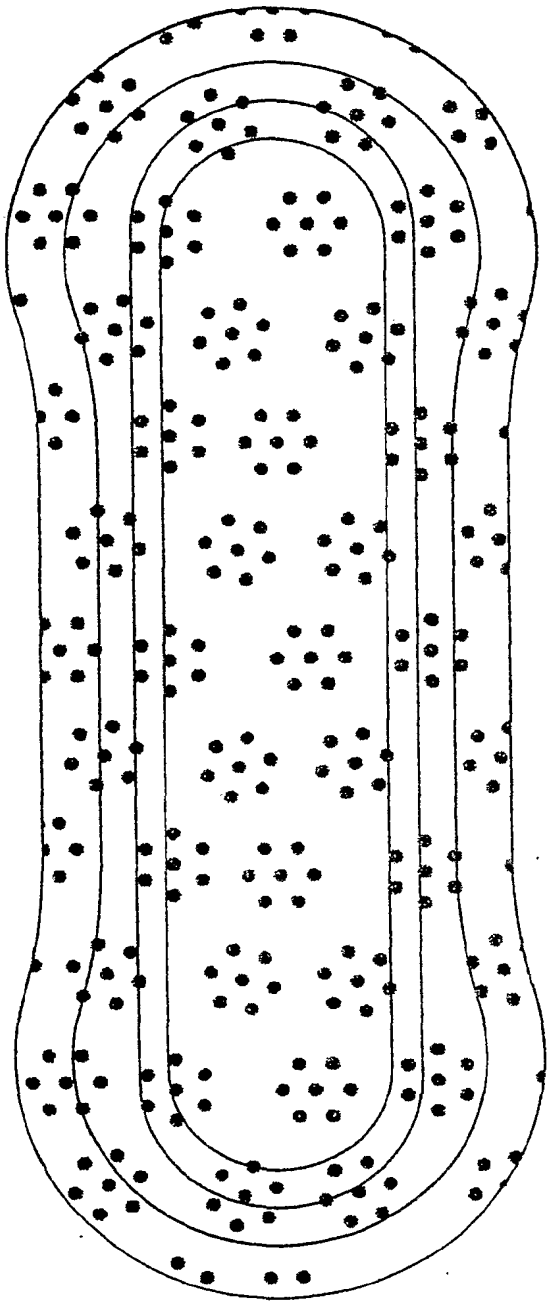

FIG. 12

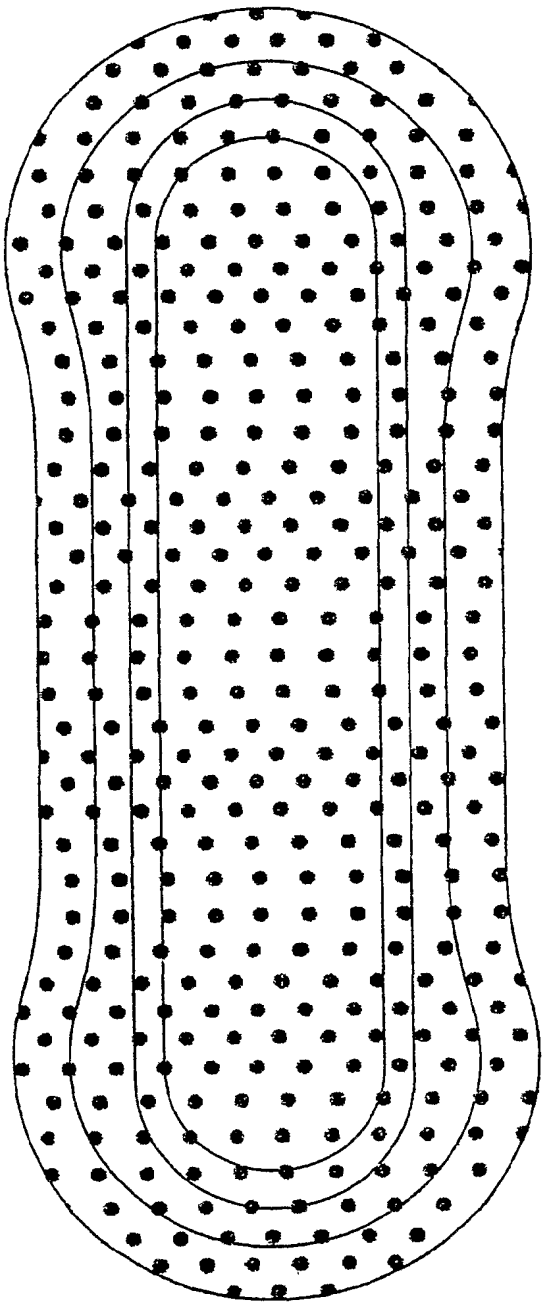

FIG. 13

INTERNATIONAL SEARCH REPORT

Ional Application No
PCT/US 01/09104

A. CLASSIFICATION OF SUBJECT MATTER
IPC 7 A61F13/15 A61F13/537 A61F13/512

According to International Patent Classification (IPC) or to both national classification and IPC

B. FIELDS SEARCHED

Minimum documentation searched (classification system followed by classification symbols)
IPC 7 A61F

Documentation searched other than minimum documentation to the extent that such documents are included in the fields searched

Electronic data base consulted during the international search (name of data base and, where practical, search terms used)

EPO-Internal

C. DOCUMENTS CONSIDERED TO BE RELEVANT

Category °	Citation of document, with indication, where appropriate, of the relevant passages	Relevant to claim No.
X	EP 0 815 819 A (UNI CHARM CORP) 7 January 1998 (1998-01-07)	1-15,17, 18
A	column 2, line 2 -column 5, line 22 figures 1,2	6,16,19

X	WO 99 25550 A (KIMBERLY CLARCK) 27 May 1999 (1999-05-27)	1,3-5,7, 9-11,15
A	page 5, line 1 -page 6, line 14 examples 1-6; tables 1-26	6,16

X	EP 0 953 324 A (PROCTER & GAMBLE) 3 November 1999 (1999-11-03) paragraph '0038! - paragraph '0040! paragraph '0051! - paragraph '0061! figures 1-7	1,3-6, 9-12,15, 16

	-/--	

[X] Further documents are listed in the continuation of box C.

[X] Patent family members are listed in annex.

° Special categories of cited documents :

"A" document defining the general state of the art which is not considered to be of particular relevance

"E" earlier document but published on or after the international filing date

"L" document which may throw doubts on priority claim(s) or which is cited to establish the publication date of another citation or other special reason (as specified)

"O" document referring to an oral disclosure, use, exhibition or other means

"P" document published prior to the international filing date but later than the priority date claimed

"T" later document published after the international filing date or priority date and not in conflict with the application but cited to understand the principle or theory underlying the invention

"X" document of particular relevance; the claimed invention cannot be considered novel or cannot be considered to involve an inventive step when the document is taken alone

"Y" document of particular relevance; the claimed invention cannot be considered to involve an inventive step when the document is combined with one or more other such documents, such combination being obvious to a person skilled in the art.

"&" document member of the same patent family

Date of the actual completion of the international search	Date of mailing of the international search report
12 September 2001	20/09/2001

Name and mailing address of the ISA	Authorized officer
European Patent Office, P.B. 5818 Patentlaan 2 NL - 2280 HV Rijswijk Tel. (+31-70) 340-2040, Tx. 31 651 epo nl, Fax: (+31-70) 340-3016	Joly, F

1

Form PCT/ISA/210 (second sheet) (July 1992)

C.(Continuation) DOCUMENTS CONSIDERED TO BE RELEVANT

Category °	Citation of document, with indication,where appropriate, of the relevant passages	Relevant to claim No.
X	WO 98 22067 A (KIMBERLY CLARK CO) 28 May 1998 (1998-05-28) page 20, line 21 -page 27, line 5 figure 1; examples 1-5; tables 1-6 ---	1-20
X	US 3 046 986 A (HARWOOD KENNETH J) 31 July 1962 (1962-07-31) column 2, line 12 -column 3, line 10	1,2,11, 12,18,19
A	figures 1-4 ---	20
X	US 4 780 352 A (PALUMBO GIANFRANCO) 25 October 1988 (1988-10-25)	1-3,11, 12,17-19
A	column 4, line 4 -column 6, line 60 claims 1,3,9-19,24-27 ---	6,20
A	US 3 811 445 A (DOSTAL Z) 21 May 1974 (1974-05-21) figures 14,15 column 6, line 66 -column 7, line 54 ---	1,11,20
A	US 5 531 727 A (ENGLE EDWARD J ET AL) 2 July 1996 (1996-07-02) column 2, line 45 -column 5, line 15 figures 1,2 ---	20
A	WO 97 33546 A (KIMBERLY CLARK GMBH ;RAIDEL MARIA (DE); ASCHENBRENNER FA FRANZ (DE) 18 September 1997 (1997-09-18) figures 1-11 ---	1,11,20
A	WO 99 56796 A (BLANEY TED LEE ;HUBBARD ROBERT MERLE (US); PROCTER & GAMBLE (US);) 11 November 1999 (1999-11-11) the whole document ---	8
P,X	WO 00 59431 A (KIMBERLY CLARK CO) 12 October 2000 (2000-10-12) claims 1-17; figures 1-12 -----	1-20

Patent document cited in search report		Publication date	Patent family member(s)			Publication date
EP 0815819	A	07-01-1998	JP	10014979	A	20-01-1998
			AU	714743	B	13-01-2000
			AU	2620797	A	15-01-1998
			CN	1175395	A	11-03-1998
			US	5885267	A	23-03-1999
WO 9925550	A	27-05-1999	US	6168849	B	02-01-2001
			AU	1311099	A	07-06-1999
			BR	9814123	A	03-10-2000
			CN	1285782	T	28-02-2001
			EP	1028849	A	23-08-2000
			PL	340499	A	12-02-2001
			TR	200001367	T	21-08-2000
			ZA	9809992	A	05-05-1999
EP 0953324	A	03-11-1999	AU	3666599	A	16-11-1999
			EP	1076541	A	21-02-2001
			WO	9955273	A	04-11-1999
WO 9822067	A	28-05-1998	US	6152904	A	28-11-2000
			AU	722841	B	10-08-2000
			AU	5360298	A	10-06-1998
			BR	9713285	A	26-10-1999
			EP	0952803	A	03-11-1999
			JP	2001504730	T	10-04-2001
US 3046986	A	31-07-1962	NONE			
US 4780352	A	25-10-1988	IT	1182491	B	05-10-1987
			AT	53485	T	15-06-1990
			AU	588607	B	21-09-1989
			AU	5943786	A	08-01-1987
			BR	8603291	A	24-02-1987
			CA	1273188	A	28-08-1990
			DE	3671837	D	19-07-1990
			EP	0207904	A	07-01-1987
			ES	2002097	A	16-07-1988
			GR	861713	A	04-11-1986
			JP	1963246	C	25-08-1995
			JP	6091894	B	16-11-1994
			JP	62038157	A	19-02-1987
			MX	163503	B	25-05-1992
			PT	8522	U	29-01-1993
			PT	82911	A	01-08-1986
US 3811445	A	21-05-1974	US	3695270	A	03-10-1972
US 5531727	A	02-07-1996	US	5257982	A	02-11-1993
			CA	2053831	A,C	27-06-1992
			JP	5247816	A	24-09-1993
			MX	9102167	A	01-06-1992
WO 9733546	A	18-09-1997	DE	19609462	A	18-09-1997
			AU	718800	B	20-04-2000
			AU	2096197	A	01-10-1997
			BR	9707965	A	27-07-1999
			CA	2247977	A	18-09-1997
			CN	1213288	A	07-04-1999

Patent document cited in search report	Publication date	Patent family member(s)	Publication date
WO 9733546 A		CZ 9802890 A	17-02-1999
		EP 0888103 A	07-01-1999
		JP 2000507126 T	13-06-2000
		TW 392500 Y	01-06-2000
		US 6241714 B	05-06-2001
WO 9956796 A	11-11-1999	AU 3877399 A	23-11-1999
		EP 1073483 A	07-02-2001
		US 6270487 B	07-08-2001
WO 0059431 A	12-10-2000	AU 3933000 A	23-10-2000

(12) INTERNATIONAL APPLICATION PUBLISHED UNDER THE PATENT COOPERATION TREATY (PCT)

(19) World Intellectual Property Organization
International Bureau

(43) International Publication Date
28 March 2002 (28.03.2002)

PCT

(10) International Publication Number
WO 02/24133 A1

(51) International Patent Classification[7]: A61F 13/537

(21) International Application Number: PCT/US01/29394

(22) International Filing Date:
20 September 2001 (20.09.2001)

(25) Filing Language: English

(26) Publication Language: English

(30) Priority Data:
09/668,649 22 September 2000 (22.09.2000) US

(71) Applicant: **TREDEGAR FILM PRODUCTS CORPORATION** [US/US]; 1100 Boulders Parkway, Richmond, VA 23225 (US).

(72) Inventors: **THOMAS, Paul, Eugene**; 8000 McDaniel Road, Terre Haute, IN 47802-5066 (US). **MARSH, Thomas, Patrick**; 1052 East Robertson Drive, Clinton, IN 47842 (US).

(74) Agents: **MUSSELMAN, P., Weston, Jr.** et al.; Jenkens & Gilchrist, P.C., 3200 Fountain Place, 1445 Ross Avenue, Dallas, Texas 75202 (US).

(81) Designated States *(national)*: AE, AG, AL, AM, AT, AU, AZ, BA, BB, BG, BR, BY, BZ, CA, CH, CN, CO, CR, CU, CZ, DE, DK, DM, DZ, EC, EE, ES, FI, GB, GD, GE, GH, GM, HR, HU, ID, IL, IN, IS, JP, KE, KG, KP, KR, KZ, LC, LK, LR, LS, LT, LU, LV, MA, MD, MG, MK, MN, MW, MX, MZ, NO, NZ, PH, PL, PT, RO, RU, SD, SE, SG, SI, SK, SL, TJ, TM, TR, TT, TZ, UA, UG, UZ, VN, YU, ZA, ZW.

(84) Designated States *(regional)*: ARIPO patent (GH, GM, KE, LS, MW, MZ, SD, SL, SZ, TZ, UG, ZW), Eurasian patent (AM, AZ, BY, KG, KZ, MD, RU, TJ, TM), European patent (AT, BE, CH, CY, DE, DK, ES, FI, FR, GB, GR, IE, IT, LU, MC, NL, PT, SE, TR), OAPI patent (BF, BJ, CF, CG, CI, CM, GA, GN, GQ, GW, ML, MR, NE, SN, TD, TG).

Published:
— *with international search report*
— *before the expiration of the time limit for amending the claims and to be republished in the event of receipt of amendments*

For two-letter codes and other abbreviations, refer to the "Guidance Notes on Codes and Abbreviations" appearing at the beginning of each regular issue of the PCT Gazette.

(54) Title: ACQUISITION DISTRIBUTION LAYER HAVING VOID VOLUMES FOR AN ABSORBENT ARTICLE

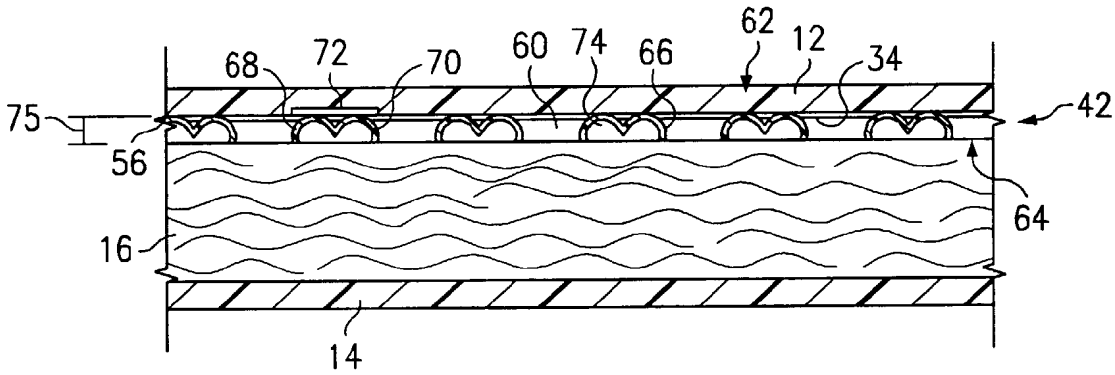

(57) Abstract: An absorbent article having a topsheet and an absorbent core material. The acquisition distribution layer is located between the topsheet and the absorbent core material. The acquisition distribution layer is made of a three dimensional apertured film that defines a large void volume space between the acquisition distribution layer and the absorbent core material. The acquisition distribution layer provides high void volume for lateral spillage during repeated insult moments because the topsheet, which is in contact with the user, is held away from dispersing fluid that is unabsorbed by saturated core material. The void volume space provides a pathway for unabsorbed fluid to flow over the top plane of saturated core regions to unsaturated regions of the core material for absorption. The void volume space allows this migration of fluid to occur without the fluid coming into contact with the topsheet, thereby avoiding a feeling of wetness for the wearer.

WO 02/24133 A1

ACQUISITION DISTRIBUTION LAYER HAVING VOID VOLUMES FOR AN ABSORBENT ARTICLE

FIELD OF THE INVENTION

This invention relates to absorbent articles such as diapers, incontinent articles, sanitary napkins, and the like. More particularly, this invention relates to absorbent articles having a topsheet and a film acquisition distribution layer having a void volume space.

BACKGROUND OF THE INVENTION

A variety of absorbent articles that are adapted to absorb body fluids are well known. Examples of absorbent articles include diapers, incontinent articles, and sanitary napkins.

One problem associated with known absorbent articles is waste product leakage, which may contaminate clothing articles, such as pants, shirts, and bedding. The amount of leakage experienced by a wearer can be reduced by increasing the rate that liquid enters the absorbent core. Therefore, an absorbent article wherein liquid rapidly penetrates the topsheet and is contained in the absorbent core will experience less leakage than an absorbent article wherein liquid is able to run across the topsheet before penetrating into the absorbent core. Consequently, run-off reduction reduces the amount of leakage associated with an absorbent article.

Another problem associated with absorbent articles is dryness of the skin contacting surface of the article. Generally, the drier the skin contacting surface, the more comfortable the absorbent article. Attempts have been made to reduce surface wetness in disposable diaper structures. For example, U.S. Pat. No. 3,945,386 issued to Anczurowski on Mar. 23, 1976 and U.S. Pat. Nos. 3,965,906 and 3,994,299 issued to Karami on Jun. 29, 1976 and Nov. 30, 1976, respectively, teach diaper structures having a perforated thermoplastic film interposed between the topsheet and the absorbent core. U.S. Pat. No. 4,324,247 issued to Aziz on Apr. 13, 1982 describes an effort directed to both reducing run-off and reducing the surface wetness of absorbent articles.

In addition to the dryness of the skin contacting surface, the feel of the skin

contacting surface is also an important consideration. One problem is that some consumers do not like the plastic feel associated with formed films. A number of efforts have been directed at improving the feel of the surface of absorbent articles. One example is described in U.S. Pat. No. 3,967,623 issued to Butterworth, et al. The Butterworth patent teaches an absorbent pad having a facing sheet made of a perforated thermoplastic web that has an integral fibrous or sueded outer surface.

An additional problem with typical absorbent articles, in particular adult incontinence diapers. As a wearer urinates a second time or more, a sensation of wetness is felt as unabsorbed fluid flows laterally through the topsheet from an area of saturated core material to an area of unsaturated core material for absorption. This sensation is highly uncomfortable and undesirable.

The products described in most of the above references, however, are less than ideal in achieving a good combination of all three desired properties of reduced surface run-off, improved ability to prevent a feeling of wetness of the topsheet, and improved feel.

SUMMARY OF THE INVENTION

The invention relates to an absorbent article having a topsheet and an absorbent core material. An acquisition distribution layer is located between the topsheet and the absorbent core material. The acquisition distribution layer is made of a three dimensional formed film with apertures, wherein the acquisition distribution layer has a body facing side, i.e. a female side, and a garment facing side, i.e. a male side. In accordance with the invention, the acquisition distribution layer defines a high void volume space. The large under-side void volume space provides space for unabsorbed fluid to flow over the top plane of saturated core regions and flow to new, unsaturated regions of the core material without contacting the topsheet, thereby avoiding a feeling of wetness for the user. Unabsorbed fluid results from repeated insults to a saturated zone of an absorbent core. In another embodiment, the acquisition distribution layer has at least one raised ridge extending upwards to a higher plane on the female side. The raised ridge runs in the machine direction for directing unabsorbed fluid to flow primarily in the machine direction of the absorptive device to help prevent side leakage. In another

embodiment a first and a second three dimensional apertured film forms an acquisition distribution layer having a further enlarged void volume space for flow of unabsorbed fluid and that provides a greater spacial separation between areas of containment of wetness and the topsheet. In still another embodiment, the acquisition distribution layer has a high loft, which forms relatively deep cells or buckets. When repeated insults are delivered to a saturated core region, a bucket or buckets in the insult region is filled. Subsequent insults result in fluid spilling over to adjacent buckets. The spill over action disperses the liquid volume of the insults over a larger area of the core material so that the fluid may be absorbed by unsaturated core material.

BRIEF DESCRIPTION OF THE DRAWINGS

Figure 1 is perspective view of an absorbent article of the invention that utilizes an acquisition distribution layer.

Figure 2 is a cross sectional schematic view of the absorbent article of Figure 1 taken along line 2-2 wherein the acquisition distribution layer is of a prior art type.

Figure 3 is an enlarged cross sectional view of the prior art acquisition distribution layer of Figure 2.

Figure 4 is a plan view of a three dimensional apertured film of a first embodiment of the invention for use as an acquisition distribution layer in the absorbent article of Figure 1.

Figure 5 is a cross sectional view of the absorbent article of Figure 1 taken along line 2-2 of Figure 1wherein the acquisition distribution layer shown is a cross sectional view of the three dimensional apertured film of Figure 4 taken along line 5-5 of Figure 4.

Figure 6 is a plan view of a three dimensional apertured film of a second embodiment of the invention for use as an acquisition distribution layer in the absorbent article of Figure 1.

Figure 7 is a cross sectional view of the absorbent article of Figure 1 taken along line 2-2 of Figure 1 wherein the acquisition distribution layer shown is a cross sectional view of the three dimensional layer apertured film of Figure 6 taken along line 7-7 of Figure 6.

Figure 8 is a plan view of a three dimensional apertured film of a third embodiment of the invention for use as an acquisition distribution layer in the absorbent article of Figure 1.

Figure 9 is a cross sectional view of the absorbent article of Figure 1 taken along line 2-2 of Figure 1 wherein the acquisition distribution layer shown is a cross sectional view of the three dimensional layer apertured film of Figure 8 taken along line 9-9 of Figure 1.

Figure 10 is a plan view of a disposable diaper utilizing the three dimensional apertured film of Figures 8 and 9.

Figure 11 is a cross sectional view of the absorbent article of Figure 1 wherein the acquisition distribution layer is a multi-layer apertured film of a fourth embodiment of the invention.

Figure 12 is a cross sectional view of the absorbent article of Figure 1 wherein the acquisition distribution layer is a multi-layer apertured film of a fifth embodiment of the invention.

Figure 13 is a schematic drawing an Liquid Acquisition Apparatus that is used to test the various embodiments of the absorbent articles of Figures 1 - 12.

Figure 14 is a graphical representation of data from Table 1 that shows Total Fluid Overflow and Inverse Loft for various samples of absorbent articles shown in Figures 1 - 12.

Figure 15 is a plan view at 50X magnification of Sample 2 and Sample 4 for purposes of comparing the void volume space of the samples.

Figure 16 is a cross-sectional view at 50X magnification of Sample 2 and Sample 4 for purposes of comparing the void volume space of the samples.

DETAILED DESCRIPTION OF THE INVENTION

This invention relates to absorbent articles having a three dimensional apertured film acquisition distribution layer. Examples of absorbent articles include diapers, incontinent articles, sanitary napkins, and similar articles.

For purposes of this application, the term "absorbent article" will refer to articles that absorb and contain body exudates. More specifically, the term refers to articles

which are placed against or in proximity to the body of a wearer for absorbing and containing various exudates discharged from the body. The term "absorbent article", as used herein, is intended to include diapers, incontinent articles, sanitary napkins, pantiliners, and other articles used to absorb body exudates.

The term "diaper" refers to a garment typically worn by infants and incontinent persons that is drawn up between the legs and fastened about the waist of the wearer. Examples of diapers from the prior art include diapers described in U.S. Pat. Re. No. 26,152, issued to Duncan, et al. on Jan. 31, 1967; U.S. Pat. No. 3,860,003 issued to Buell on Jan. 14, 1975; U.S. Pat. No. 4,610,678 issued to Weisman, et al. on Sep. 9, 1986; U.S. Pat. No. 4,673,402 issued to Weisman, et al. on Jun. 16, 1987; U.S. Pat. No. 4,695,278 issued to Lawson on Sep. 22, 1987; U.S. Pat. No. 4,704,115 issued to Buell on Nov. 3, 1987; U.S. Pat. No. 4,834,735 issued to Alemany, et al. on May 30, 1989; U.S. Pat. No. 4,888,231 issued to Angstadt on Dec. 19, 1989; and U.S. Pat. No. 4,909,803 issued to Aziz, et al. on Mar. 20, 1990.

The term "incontinent article" refers to pads, undergarments, e.g., pads held in place by a suspension system, such as a belt, or other device, inserts for absorbent articles, capacity boosters for absorbent articles, briefs, bed pads, and similar devices, whether worn by adults or other incontinent persons. Examples of incontinent articles include those disclosed in U.S. Pat. No. 4,253,461 issued to Strickland, et al. on Mar. 3, 1981; U.S. Pat. Nos. 4,597,760 and 4,597,761 issued to Buell; the above-mentioned U.S. Pat. Nos. 4,704,115; 4,909,802 issued to Ahr, et al.; U.S. Pat. No. 4,964,860 issued to Gipson, et al. on Oct. 23, 1990; and in U.S. Pat. Application Ser. Nos. 07/637,090 and 07/637,571 filed respectively by Noel, et al. and Feist, et al. on Jan. 3, 1991.

The term "sanitary napkin" refers to an article that is worn by a female adjacent to the pudendal region that is intended to absorb and contain various exudates which are discharged from the body, e.g., blood, menses, and urine. Examples of sanitary napkins are disclosed in U.S. Pat. No. 4,285,343, issued to McNair on Aug. 25, 1981; U.S. Pat. Nos. 4,589,876 and 4,687,478, issued to Van Tilburg on May 20, 1986 and Aug. 18, 1987 respectively; U.S. Pat. Nos. 4,917,697 and 5,007,906 issued to Osborn, et al. on Apr. 17, 1990 and Apr. 16, 1991, respectively; and U.S. Pat. Nos. 4,950,264 , and 5,009,653 issued to Osborn on Aug. 21, 1990 and Apr. 23, 1991, respectively; and in

U.S. Pat. Application Ser. No. 07/605,583 filed Oct. 29, 1990 in the name of Visscher, et al.

The term "pantiliner" refers to absorbent articles that are less bulky than sanitary napkins that are generally worn by women between their menstrual periods. Examples of pantiliners are disclosed in U.S. Pat. No. 4,738,676 entitled "Pantiliner" issued to Osborn on Apr. 19, 1988.

The disclosures of all patents, patent applications and any patents which issue therefrom, as well as any corresponding published foreign patent applications, and publications mentioned throughout this patent application are hereby incorporated by reference herein. It is expressly not admitted, however, that any of the documents incorporated by reference herein teach or disclose the present invention. It is also expressly not admitted that any of the commercially available materials or products described herein teach or disclose the present invention.

Referring now to Figure 1, a simplified representation of a typical absorbent article 10 is shown. It should be understood, however, that Figure 1 is shown for purposes of example only, and should not be construed to limit the particular type or configuration of absorbent article. As shown in FIG. 2, absorbent article 10 basically comprises topsheet 12, backsheet 14, an acquisition distribution layer 15, and an absorbent core 16. Absorbent core 16 has a top or body facing side 17.

The absorbent article 10 has two surfaces, a body-contacting surface or body surface 18 and a garment-contacting surface or garment surface 20. The body surface 18 is intended to be worn adjacent to the body of the wearer. The garment surface 20 (FIG. 2) of the absorbent article 10 is on the opposite side and is intended to be placed adjacent to the wearer's undergarments or clothing when the absorbent article10 is worn.

The absorbent article 10 has two centerlines, a longitudinal centerline 22 (Fig. 1) and a transverse centerline 24 (Fig. 1). Absorbent article 10 has two spaced apart longitudinal edges 26 and two spaced apart transverse or end edges, i.e., ends 28, which together form the periphery 30 of the absorbent article 10.

The individual components of the absorbent article 10 will now be looked at in greater detail. Topsheet 12 is compliant, soft-feeling and non-irritating to the wearer's skin. Further, topsheet 12 is liquid permeable, permitting liquids to readily penetrate

through its thickness. The topsheet 12 has a body-facing side 32 (Fig. 2) and a garment-facing side 34 (Fig. 2), two longitudinal or side edges 36 and two end edges 38 (Fig. 1). Absorbent core 16 has a top or body facing side 17. Throughout the remainder of this application, similar components will share the same numbers for all embodiments of the invention, e.g., "topsheet" will be designated by the numeral 12 in each embodiment.

Topsheet 12 is preferably made of a nonwoven material or of a vacuum formed film layer. Topsheet 12 may be bonded to acquisition distribution layer 15 (Fig. 2), although in the preferred embodiment, topsheet 12 is not bonded to but instead lays in contact with acquisition distribution layer 15. The absorbent article of Figure 3 utilizes a three dimensional apertured plastic film 44 as an anti-rewet (or anti-wicking) layer. Three dimensional apertured plastic film 44 has a body facing side or female side 46 and a garment facing side or male side 48. The garment-facing side 34 of the topsheet 12 is preferably maintained in close contact with the female side 46 of the apertured plastic film 44. The topsheet 12 and acquisition distribution layer 15 are examined in greater detail below.

The topsheet 12 may be any nonwoven fabric that is permeable to liquids. A suitable nonwoven fabric may be manufactured from a various materials including natural fibers (e.g., wood or cotton fibers), synthetic fibers (e.g., polyester, polypropylene) or a combination thereof. The topsheet 12 is preferably made from fibers selected from a group consisting of polypropylene, polyester, polyethylene, polyvinylalcohol, starch base resins, polyurethanes, cellulose and cellulose esters.

Various manufacturing techniques may be used to manufacture nonwoven fabric for use in topsheet 12. For example, the nonwoven fabric may be resin-bonded, needle punched, spunbonded, or carded. Carded nonwoven fabrics may be thermally bonded, air-thru bonded, and spunlaced fabrics. A preferred nonwoven fabric is a thermally bonded polypropylene fabric.

A typical topsheet 12 is a non-woven fabric having a pattern of thermal bond sites. One example of a nonwoven fabric has a carded thermally dot bonded polypropylene web. The thermal bonds of such a fabric are typically rectangularly-shaped in plan view. The bonds are typically arranged in staggered rows. Another typical nonwoven is a spunbonded polypropylene web with similarly arranged thermal bonds.

Still another typical nonwoven fabric is a carded polypropylene web that is embossed in accordance with the method taught in U.S. Pat. No. 4,781,710 issued to Megison, et al. This nonwoven fabric has embossed and thermal bonded areas that are diamond-shaped in plan view. The diamond-shaped bonds are spaced apart and arranged in a diamond-shaped grid such as is shown in FIGS. 1 and 2 of the Megison, et al. patent. Typically, the embossing does not extend to the underlying core, however.

Preferably, acquisition distribution layer 15 is a perforated thermoplastic film with tapered capillaries which has a run off percent of less than about 10 percent and which has an increased liquid flow rate through the tapered capillaries. The method of making such a film includes a two-fold surface treatment, which is taught by United States Patent nos. 4,535,020 and 4,456,570 to Thomas et al. entitled, "Perforated Film" and "Treatment of Perforated Film", respectively. United States Patent nos. 4,535,020 and 4,456,570 are incorporated herein by reference. The method teaches that one surface treatment is provided by adding an internal chemical additive, namely a surfactant, to a film forming polyolefin resin. The additive is compounded or otherwise mixed or blended with the resin prior to the film being formed from the resin. After the film is formed the other surface treatment is accomplished by treating the film with a corona discharge treatment which acts on the chemical additive to provide the perforated film with a zero or near zero percent run off.

The surfactant provides a film surface which has greater polarizability than the polyolefin film would have without the surfactant being added. Higher surface polarity yields higher wettability. Although the chemically treated film is more polar than untreated film, corona discharge treatment of the film itself provides the desired maximum wettability. Any surfactant which achieves this polarity and which migrates to the surface of the film may be used in this invention.

Referring now to Figure 3, the apertured plastic film 44 is typically located between the topsheet 12 and the absorbent core 16. As shown in FIG. 3, the apertured plastic film 44 is a three-dimensional structure having a plurality of tapered capillaries 50, each of which has a base opening 52, and an apex opening 54. The apex of the openings 54 are in intimate contact with the absorbent core 16. Additionally, most of the surface area of male side 48 of film 44 is in contact with core 16.

The apertured plastic film 44 is typically manufactured from a liquid impervious, thermoplastic material. One suitable material is a low density polyethylene film having a thickness of from 0.001 to 0.002 inches (0.0025 to 0.0051 cm.). The thermoplastic material for use in the manufacture of a typical apertured plastic film 44 is selected from a group consisting generally of polyethylene, polypropylene, polyvinyl chloride, starch base resins, polyvinylalcohol, polyurethanes, polycaprolactone and cellulose esters, or combinations thereof.

In one typical embodiment, the thermoplastic material is provided with a multiplicity of tapered capillaries 50 in a manner, size, configuration, and orientation set forth in U.S. Pat. No. 3,939,135 issued to Thompson on Dec. 30, 1975. Other typical apertured plastic films are disclosed in U.S. Pat. No. 4,324,246, issued to Mullane, et al. on Apr. 13, 1982, U.S. Pat. No. 4,342,314, issued to Radel, et al. on Aug. 3, 1982, and U.S. Pat. No. 4,463,045, issued to Ahr, et al. on Jul. 31, 1984. The apertured plastic film 44 can also consist of other types of apertured plastic films that are not thermoplastic. The type of film used depends on the type of processing that the film and nonwoven components are subjected to during the manufacture of the topsheet 12. Thermoplastic films are typically used when the topsheet 12 and the acquisition distribution layer 15 or film 44 are integrally formed into a composite structure by melting. Other types of apertured films include, but are not limited to hydro-formed films. Hydro-formed films are described in at least some of the following U.S. Pat. Nos.: 4,609,518, 4,629,643, 4,695,422, 4,772,444, 4,778,644, and 4,839,216 issued to Curro, et al., and U.S. Pat. No. 4,637,819 issued to Ouellette, et al.

Typically, the nonwoven fabric of topsheet 12 and the apertured plastic film 44 are placed into a face-to-face relationship. The two components may be secured or unsecured. The two components, if secured, may be secured to each other by various methods. Typical methods for securing the nonwoven fabric and the apertured film 44 include, but are not limited to adhesives, fusion including heat bonding and/or pressure bonding, ultrasonics, and dynamic mechanical bonding.

The adhesives can be applied in a uniform continuous layer, a patterned layer, or an array of separate lines, spirals, beads, or spots of adhesive. The adhesive attachment typically comprises an open pattern network of filaments of adhesive such as is disclosed

in U.S. Pat. No. 4,573,986 issued to Minetola, et al. on Mar. 4, 1986, or an open pattern network of filaments having several lines of adhesive filaments swirled into a spiral pattern as illustrated by the apparatus and method shown in U.S. Pat. No. 3,911,173 issued to Sprague, Jr. on Oct. 7, 1975; U.S. Pat. No. 4,785,996 issued to Zieker, et al. on Nov. 22, 1978; and U.S. Pat. No. 4,842,666 issued to Werenicz on Jun. 27, 1989. Another method of heat/pressure bonding that could be used is described in U.S. Pat. No. 4,854,984 issued to Ball, et al. on Aug. 8, 1989.

The nonwoven, fabric of topsheet 12 and the apertured plastic film 44 may alternatively be indirectly secured. For example, the nonwoven fabric and the apertured film 44 could be secured to or through a thin layer of airfelt, or a layer-of hydrophobic material positioned between the nonwoven fabric and the apertured plastic film 44. Typically, such additional layer or layers are treated with a surfactant as described in greater detail below.

The nonwoven fabric of topsheet 12 and the apertured plastic film 44 can alternatively be integrally formed into a composite structure, as taught by Merz et al. in U.S. Patent 4,995,930. The terms "composite", "composite structure" or "combination", as used herein, refer to relationships in which portions of the nonwoven fabric extend into the film 44, and vice versa so that they are integrally attached.

Referring now to Figs. 4 and 5, a first embodiment of an improved absorbent article of the applicant's invention utilizes an acquisition distribution layer 42 made of a three dimensional apertured film 56 imparted with a hexagonal pattern. Although a hexagonal pattern is used for purposes of illustration, it should be understood that other patterns may also be used for any of the films described herein. Examples of other patterns include circular, oval, elliptical, polygonal, or other suitable patterns or combinations of patterns. The hexagonal pattern forms a plurality of adjacent hexagons or cells 58. In the preferred embodiment, the hexagonal pattern is based on a 8.75 mesh wherein "mesh" is the number of cells 58 aligned in a one-inch length. Although a mesh count of 8.75 is preferred, a mesh count of from 2 to 25 or more preferably from 4 to 15 may be used. Preferably, each cell 58 is provided with an aperture 60 that has a large hole diameter, e.g., 59 mils, which are large enough to allow insult fluids to be acquired through the three dimensional apertured film 56 as rapidly as the fluids are delivered..

Referring in particular to Fig. 5, which shows an enlarged cross sectional view of film 56 taken along line 5-5 of Fig. 4, three dimensional apertured film 56 has a body facing side or female side 62 and a garment facing side or male side 64. The garment-facing side 34 of the topsheet 12 is preferably maintained in close contact with the female side 62 of the apertured plastic film 56. Preferably topsheet 12 maintains in contact with film 56 but is unbonded to film 56.

As can be seen in Figure 5, the film 56 is located between a topsheet 12 and an absorbent core 16. The apertured plastic film 56 is a three-dimensional structure having a plurality of capillaries 66, each of which has a base opening 68 and an apex opening 70. The apex openings 70 of the capillaries 66 are in intimate contact with the absorbent core 16, and preferably apex openings 70 are affixed to core 16 to insure this intimate contact. It should also be noted that essentially only the apex openings 70 of the capillaries 66 are in intimate contact with the core 16, thereby assuring that the void spaces 74 providing for lateral spillage remain substantially unencumbered. A land area 72 is formed between adjacent apertures 60 on the female side 62 of the apertured plastic film 56. A void volume space 74 (Fig. 5) is formed on the male side 64 of the apertured plastic film 56 that provides a fluid passageway between each of the cells 58. Preferably, the ratio of void volume space 74 versus apex opening space 70 is 2:1. The three dimensional apertured film 56 has a loft 75, i.e. the distance between the surface on the female side 62 and the planar surface on the male side 64, of from 0.031" to 0.125", more preferably 0.045" to 0.100", and most preferably of 0.050". The thermoplastic material used in the film 56 preferably has a density in the range of from about 0.919 g/cc to 0.960 g/cc, with the more preferred range of densities being from about 0.930 g/cc to 0.950 g/cc. The general melt indices range for a typical material is preferably from about 0.10 to about 8.50, with the more preferred range typically being from about 1.5 to about 4.5.

Referring now to Figs. 6 and 7, a second embodiment of an improved absorbent article of the applicant's invention utilizes an acquisition distribution layer 15 made of a three dimensional apertured film 76 imparted with a hexagonal pattern. Although a hexagonal pattern is discussed herein, it should be understood that other patterns may

also be used. Examples of other patterns include circular, oval, elliptical, polygonal, or other suitable patterns or combinations of patterns. The hexagonal pattern forms a plurality of adjacent hexagons or cells 78. In the preferred embodiment, each cell 78 is 1/32" to ½" as measured from the flat to flat portion of the hexagon making up each cell 78 of the hexagonal pattern. More preferably, cells 78 of 1/16" to 1/5" are used. Still more preferably, cells 78 measuring 1/8" across are used.

Referring more particularly to Fig. 7, which shows an enlarged cross sectional view of film 76 taken along line 7-7 of Fig. 6, three dimensional apertured film 76 has a body facing side or female side 82 and a garment facing side or male side 84. The garment-facing side 34 of the top layer 12 is preferably maintained in close contact with the female side 82 of the apertured plastic film 76. Preferably, top layer 12 maintains contact with but is unbonded to film 76.

As can be seen in Figure 7, the film 76 is located between a top layer 12 and an absorbent core 16. The apertured plastic film 76 is a three-dimensional structure having a plurality of large openings or buckets 86, each of which has a base opening 88 and an apex opening 90. The apex openings 90 of buckets 86 are in intimate contact with the absorbent core 16, and preferably apex opening 90 is affixed to core 16 to insure this intimate contact. A land area 92 is formed between adjacent apertures 80 on the female side 82 of the apertured plastic film 76. In the honeycomb embodiment, land area 92 is preferably relatively narrow. The three dimensional apertured film 76 has a loft 94 (Fig. 7), i.e. the distance between the surface on the female side 82 and the planar surface on the male side 84, of greater than 30 mils. In the preferred embodiment, the loft 94 is 50 mils.

Referring now to Figs. 8 and 9, a third embodiment of an improved absorbent article of the applicant's invention utilizes an acquisition distribution layer 15 made of a three dimensional apertured film 96 imparted with a hexagonal pattern. Although a hexagonal pattern is discussed for purposes of illustration, it should be understood that other patterns may also be used for any of the films discussed herein.. Examples of other patterns include circular, oval, elliptical, polygonal, or other suitable patterns. The hexagonal pattern forms a plurality of adjacent hexagons or cells 98. In the preferred embodiment, the hexagonal pattern is based on a 8.75 mesh wherein "mesh" is the

number of cells 98 aligned in a one-inch length. Although a mesh count of 8.75 is preferred, a mesh count of from 2 to 25 or more preferably from 4 to 15 may be used. Preferably, each cell 98 is provided with apertures 100 that have large hole diameters, e.g., 59 mils. A plurality of raised ridges 101 are formed on the three dimensional apertured film 96. The raised ridges 101 preferably run longitudinally or parallel to longitudinal centerline 22 (Fig. 1) of the absorbent article10.

Referring in particular to Fig. 9, which shows an enlarged cross sectional view of film 96 taken along line 9-9 of Fig. 8, three dimensional apertured film 96 has a body facing side or female side 102 and a garment facing side or male side 104. The garment-facing side 34 of the topsheet 12 is preferably maintained in close contact with the female side 102 of the apertured plastic film 96. Preferably, top layer 12 maintains contact with but is unbonded to film 96. The thermoplastic material used in the film 76 preferably has a density in the range of from about 0.919 g/cc to 0.960 g/cc, with the more preferred range of densities being from about 0.930 g/cc to 0.950 g/cc. The general melt indices range for a typical material is preferably from about 0.10 to about 8.50, with the more preferred range typically being from about 1.5 to about 4.5.

As can be seen in Figure 9, the film 96 is located between topsheet 12 and an absorbent core 16. The apertured plastic film 96 is a three-dimensional structure having a plurality of capillaries 106, each of which has a base opening 108 and an apex opening 110. The apex openings 110 of capillaries 106 are in intimate contact with the absorbent core 16, and preferably apex openings 110 are affixed to core 16 to insure this intimate contact. It should also be noted that essentially only the apex openings 110 of capillaries 106 are in intimate contact with the core 16, thereby assuring that the void spaces 114-116 providing for lateral spillage remain substantially unencumbered. A land area 112 is formed between adjacent apertures 100 on the female side 102 of the apertured plastic film 96. A void volume space 114 is formed on the male side 104 of the apertured plastic film 96 that provides a fluid passageway between each of the cells 98. A channel 115 (Fig. 9) is formed on the male side 104 of each raised ridge 101. An enlarged void volume space 116 is formed when the channel 115 communicates with the void volume space 114 of the apertured plastic film 96. The three dimensional apertured film 96 has a loft 118 (Fig. 9), i.e. the distance between the surface on the raised ridges 101 on

female side 102 and the planar surface of the male side 104, in the range of 0.065, i.e., the raised ridge 101 preferably adds 0.015" to the preferred loft of 0.050" for film 96. Although 0.050" is the most preferred loft, a loft of from 0.031" to 0.125" and more preferably 0.045" to 0.100" may be used. Raised ridges 101 may be formed by affixing a wire around the circumference of a vacuum forming screen or by forming an elongated protrusion upon a vacuum formed screen and passing a film over the screen in a manner known in the art. The thermoplastic material used in the film 96 preferably has a density in the range of from about 0.919 g/cc to 0.960 g/cc, with the more preferred range of densities being from about 0.930 g/cc to 0.950 g/cc. The general melt indices range for a typical material is preferably from about 0.10 to about 8.50, with the more preferred range typically being from about 1.5 to about 4.5.

A disposable diaper 120 utilizing a section of three dimensional apertured film 96 having raised ridges 101 is shown in Figure 10. Disposable diaper 120 has a longitudinal centerline 122 and a transverse centerline 124. It should be understood that disposable diaper 120 is shown here as an example only, and the invention described herein should not be construed to be limited to disposable diapers but may also include incontinent articles, sanitary napkins, pantiliners or other absorbent articles.

Referring now to Fig. 11, a fourth embodiment of an improved absorbent article of the applicant's invention utilizes an acquisition distribution layer 15 made of three dimensional apertured film 56 (Figs. 4 and 5) and three dimensional apertured film 96 (Figs. 8 and 9), which shall be referred to as multi-layer apertured film 126. Three dimensional apertured film 56 forms the body facing sublayer 128 of multi-layer apertured film 126. Three dimensional apertured film 96 forms the garment facing sublayer 130 of multi-layer apertured film 126. The garment-facing side 34 of the topsheet 12 is preferably maintained in close contact with the female side 62 of the apertured plastic film 56 that forms the body facing sublayer 128. Preferably, top layer 12 maintains contact with but is unbonded to sublayer 128.

As can be seen in Figure 11, the multi-layer apertured film 126 is located between a topsheet 12 and an absorbent core 16. The multi-layer apertured film 126 is a three-dimensional structure that allows fluids to pass therethrough. The three dimensional apertured film 56 that forms the body facing sublayer 128 is in contact with raised ridges

101 that are formed on the sublayer 130. The apex openings 110 of the three dimensional apertured film 96 that forms the garment facing sublayer 130 are preferably in intimate contact with the absorbent core 16. The void volume space 114 and channel 115, which form the enlarged void volume space 116, of the apertured plastic film 96 that forms the garment facing sublayer 130 is complimented by the additional void volume space 74 of three dimensional apertured film 56 that forms the body facing sublayer 128. A further enlarged void volume space 136 is formed by the space between the sublayers 128 and 130 as a result of the height of channels 101. The multi-layer apertured film 126 has a loft 138, i.e. the distance between the female side 62 of the three dimensional apertured film 56 that forms the body facing sublayer 128 and the planar surface of the male side 104, of three dimensional apertured film 96. The preferred loft 138 for the multi-layer apertured film 126 is 0.90", which is the sum of a preferred loft of 50 mils for film 96, 15 mils for raised ridges 101 and 25 mils for top layer 12. Sublayers 128 and 130 of multi-layer film 126 are preferably bonded together in a manner taught by United States patent 5,635,275 to Biagioli, et al., entitled, "Lamination of non-apertured three-dimensional films to apertured three-dimensional films and articles produced therefrom". United States patent 5,635,275 is hereby incorporated by reference. However, the multi-layer film 126 is preferably unbonded to topsheet 12.

Referring now to Fig. 12, a fifth embodiment of an improved absorbent article of the applicant's invention utilizes an acquisition distribution layer 15 made of three dimensional apertured film 56 (Figs. 4 and 5) and three dimensional apertured film 76 (Figs. 6 and 7), which shall be referred to as multi-layer apertured film 146. Three dimensional apertured film 56 forms the body facing sublayer 148 of multi-layer apertured film 146. Three dimensional apertured film 76 forms the garment facing sublayer 150 of multi-layer apertured film 146. The garment-facing side 34 of the topsheet 12 is preferably maintained in close contact with the female side 62 of the apertured plastic film 56 that forms the body facing sublayer 148. Preferably, top layer 12 maintains contact with but is unbonded to sublayer 148.

As can be seen in Figure 12, the multi-layer apertured film 146 is located between a topsheet 12 and an absorbent core 16. However, it is contemplated that multi-layer apertured film 146 could also function without topsheet 12. The multi-layer apertured

film 146 is a three-dimensional structure that allows fluids to pass therethrough. The three dimensional apertured film 56 that forms the body facing sublayer 148 is in contact with land area 92 of three dimensional apertured film 76 that forms the sublayer 150. The body facing sublayer 148 separates the topsheet 12 from unabsorbed fluids that spill over from bucket 86 to an adjacent bucket 86. The void volume space 74 of body facing sublayer 148 and the buckets 86 of garment facing sublayer 150 form a further enlarged void volume space 156. The multi-layer apertured film 146 has a loft 158, i.e. the distance between the female side 62 of the three dimensional apertured film 56 that forms the body facing sublayer 148 and the planar surface of the male side 84, of three dimensional apertured film 76. The preferred loft 158 for the multi-layer apertured film 146 is 70 mils, i.e., 50 mils for the garment facing sublayer 150 and 20 mils for the body facing sublayer 148. Sublayers 148 and 150 of multi-layer film 146 are preferably bonded together in a manner taught by United States patent 5,635,275 to Biagioli, et al., which is hereby incorporated by reference. However, the multi-layer film 146 is preferably unbonded to topsheet 12. The composite multi-layer apertured films 126 and 146 may be constructed in accordance with the teachings of United States patent 5,635,275 to Biagioli, et al., which is hereby incorporated by reference.

In practice, the three dimensional apertured films 56, 76, 96 and multi-layer apertured films 126 and 146 may be used as an acquisition distribution layer 15 in an absorbent article 10. Absorbent article 10 is used for applications where fluid absorption is desirable. In use, body exudates, such as an urine insults from male or female babies or adults, are deposited on the absorbent article 10. The urine insults are typically delivered in a generally singular point of fluid flow. Upon repeated insults, an undesirable leakage or undesirable feeling of wetness by the user may occur due to the core material 16 becoming saturated in the repeat insult region. In other words, the absorbent core 16 may experience an inability to absorb repeated insults in a particular region. As a result, additional fluid insults that are delivered to the absorbent article 10 may be unabsorbed by the core 16 and remain on the top or body facing side 17 of the core layer 16. Applicant's invention provides a method for the unabsorbed fluid from the core layer 16 to be directed to unsaturated zones of the core layer 16. Narrow land areas 92 on the female side 82 of film 76 preferably have a small enough surface area

such that fluid contained thereon is insufficient in amount to provide a wetness sensation to the user when portions of the topsheet 12 are momentarily wetted by the spill over of unabsorbed fluid from one bucket 86 to an adjacent bucket 86. When unabsorbed fluid contacts topsheet 12 an unpleasant feeling of wetness of topsheet 12 occurs. A wet topsheet 12 results in uncomfortable fluid contact with the skin of a wearer.

For example, when three dimensional apertured film 56 (Figs. 4 and 5) is used in absorbent article10 (Fig. 1), fluid that is not absorbed or that spills-over from core layer 16 is able to flow within void volume space 74 to an unsaturated area of core 16.. The void volume space 74 on the male side 64 (Fig. 5) of adjacent cells 58 (Fig. 4) are interconnected to allow a high volume of fluid to pass to unsaturated regions of core 16. The plurality of adjacent hexagons form a large under-side void volume space that provides space for fluid that spills over the top plane or body facing side 17 of saturated core regions 16 and find new, unsaturated regions. The unabsorbed fluid that results from repeated insults may then flow from a saturated zone of absorbent core material 16 and be redirected through the under-side void volume space 74 to an unsaturated zone of the absorbent core material 16. Without the void volume space 74 of the three dimensional apertured film 56, the topsheet 12, which is contact with the skin, will become wet as the insult fluid seeks new regions to be absorbed. The male side void volume area 74 is a much greater total void volume area than previously known anti-rewet or anti-wicking layers.

As another example, when three dimensional apertured film 76 (Figs. 6 and 7) is used in absorbent article10 (Fig. 1), insult fluid that is delivered to an area after core material 16 in the area has been saturated pools within buckets 86. When a bucket 86 at the insult point becomes full, buckets 86 adjacent to the insult point are filled as the fluid within full bucket 86 spills over. This process is repeated as spill-over occurs between adjacent buckets 86 to accommodate the full insult fluid volume. Eventually, the spill-over from buckets 86 flows into a bucket 86 that is located proximate an area of unsaturated core material 16 and the fluid is absorbed. Since the spill over of unabsorbed fluid from a bucket 86 to adjacent buckets 86 disperses the unabsorbed liquid over a larger area of core material 16 where the fluid may be absorbed, an undesirable wetness of the topsheet 12 may be avoided. The open-cell void volume areas 86, is much more

total void volume area than previously known film anti-rewet or anti-wicking layers. The preferred percentages range of land areas 92 for three dimensional apertured film 76 is 5 to 20% of the total surface area. The large patterned acquisition distribution layer material or three dimensional apertured film 76 also provides a greater measure of loft, e.g. greater than 30 mils and more preferably, 50 mils in the 1/8" honeycomb embodiment. The greater loft 94 or thickness between the upper-most plane and lower-most plane of the of the three dimensional apertured film 64 provides a 'wick-proof' barrier or layer between the wetted core 16 and the skin contact area of a user. A greater loft 94 results in an improved feeling of dryness. Since the material in the topsheet 12 is only a small percent of the total occupied volume, the greater the volume, the more "air cushion" that is provided next to the skin contact region.

As a still further example, when three dimensional apertured film 96 (Figs. 8 and 9) is used in absorbent article10 (Fig. 1), insult fluid that is not absorbed in core layer 16 is able to flow within void volume space 114. The void volume space 114 on the male side 104 (Fig. 9) of adjacent cells 98 (Fig. 9) are interconnected to allow a high volume of fluid to pass to unsaturated regions of core 16. Additionally, raised ridges 101 form channels 115 to further accommodate unabsorbed fluids via enlarged void volume space 116. A further advantage of the channels 115 is that the channels 115 direct unabsorbed fluids in a desired direction, such as in the longitudinal direction, i.e., parallel to longitudinal centerline 122 of disposable diaper 120 (Figure 10). By directing the unabsorbed fluid in the longitudinal direction, the fluid may be directed to locations with greater amounts of unsaturated core material 16 as opposed to directing the fluid towards undesirable locations such as a perimeter of the diaper. The channels 115 direct fluid away from a direction that is parallel to the transverse centerline of disposable diaper 120. The raised ridges are, therefore, effective at eliminating side leakage from disposable diaper 20.

Additionally, various embodiments of acquisition distribution layer 42 may be combined into a multi-layer apertured film, such as film 126 (Fig. 11) or film 146 (Fig. 12). Multi-layer apertured film 126 provides a further enlarged void volume space 136 to accommodate unabsorbed fluids. The further enlarged void volume space 136 allows unabsorbed fluids to flow to regions where core material 16 is unsaturated without

allowing the unabsorbed fluids to come into contact with the topsheet 12, thereby avoiding an unpleasant feeling of wetness for the user.

Multi-layer apertured film 146 (Fig. 12) provides a further enlarged void volume space 156 to accommodate unabsorbed fluids. The further enlarged void volume space 156 allows unabsorbed fluids to spill over lands 92 from buckets 86 to adjacent buckets 86 where core material 16 is unsaturated. Body facing sublayer 148, i.e. film 56, substantially prevents unabsorbed fluids from contacting the topsheet 12 when unabsorbed fluids spill over land 92 from a bucket 86 of garment facing sublayer 150, i.e. film 76, to adjacent buckets, thereby further reducing the unpleasant feeling of wetness for the user.

The use of three dimensional apertured films 56, 76, 96, and multi-layer apertured films 126 and 146 increase the loft of the acquisition distribution layer 15 of the absorbent article 10. The greater loft 75, 94, 118, 138 and 158 or thickness between the upper-most plane and lower-most plane of the of the three dimensional apertured films 56, 76, 96, and multi-layer apertured films 126 and 146 provides a 'wick-proof' barrier or layer between the wetted core 16 and the skin contact area of a user. A greater loft 75, 94, 118, 138 and 158 results in an improved feeling of dryness. Since the material in the topsheet 12 is only a small percent of the total occupied volume, the greater the volume, the more "air cushion" that is provided next to the skin contact region.

The large female side void volume of the "spill-over" embodiments facilitates dispersion of unabsorbed fluids. Preferably, for a square meter of film, the female side void volume is greater than 500 cm^3, more preferably greater than 750 cm^3, and most preferably greater than 1000 cm^3. Additionally, the large male side void volume of the "spill-under" embodiments also facilitates dispersion of unabsorbed fluids. Preferably, for a square meter of film, the male side void volume is preferably greater than 500 cm^3, more preferably greater than 600 cm^3, and most preferably greater than 750 cm^3.

Test Data

Testing was performed using the Multiple Insult Acquisition method. Several methods are described in detail in an article by James P. Hanson in an article appearing in Nonwovens World, Fall 1997, page 57–63, entitled, "The Test Mess Part III - Credible

Testing for Liquid Acquisition", which is incorporated herein by reference.

More specifically, the applicant's test was conducted as follows. Referring now to Figure 13, die cut samples 160 are cut from absorbent article 10 in an area where acquisition distribution layer 15 is present. The topsheet 12 and acquisition distribution layer 15 are removed from the absorbent article 10, paying particular attention not to change the orientation of the materials. The topsheet 12 and acquisition distribution layer 15 of the core cuts or die samples 160 are then randomly weighed and the average weight and standard deviation for the weight are randomly recorded. Each die cut sample 160 is then reconstructed by adding the absorbent core 16.

To perform the Acquisition Rate Performance on all three layers, a Liquid Acquisition Apparatus 162 is used. Apparatus 162 is made up of a plate 164 having an opening 166 in the center of the plate 164 for placement on top of sample 160. A controlled volume chamber 168 extends upwardly from the plate 164 for receiving a desired fluid flow rate and dosage from a fluid supply 170. An overflow pipe 172 extends outwardly from the controlled volume chamber 168 at a location slightly above the plate 164.

Six samples were tested by the above described method wherein the fluid supply 170 pumped fluid into the controlled volume chamber 168 at a rate of 7 ml/sec. Samples 1 - 3 are samples having an acquisition distribution layer similar to that shown in Figure 3 wherein the samples have varying amounts of loft or thickness as is indicated in Table 1, below. In particular, Sample 1 is a prior art film in accordance with the teachings of United States Invention Registration no. H1670, to Aziz et al. having 20 mils of loft, a pattern of round or hex cells and a 22 mesh count. Sample 2 is a prior art film in accordance with the teachings of United States Invention Registration no. H1670, to Aziz et al. having 23 mils of loft, a pattern of hex cells and a 25 mesh count. Samples 4 and 5 are examples of films embodying the invention of the application wherein Sample 3 has an acquisition distribution layer 15 with male side void volume flow area similar to that shown in Figures 4 and 5. Sample 4 is the embodiment of the invention shown in Figures 6 and 7, i.e., the "bucket" embodiment, having a 1/8" honeycomb pattern on the acquisition distribution layer. Sample 3 has slightly lower loft (it is 49 mils vs. 51 mils) but a greater male side void volume than Sample 4. In particular, Sample 3 has a hex

pattern with 50 mils loft on a 8.75 mesh count. Sample 4 has a 1/8" honeycomb pattern with 50 mils of loft on an 8 mesh count. The results are shown in Table 1, below.

Sample No.	Total Fluid Overflow (ml)	Inverse Expanded Loft (1/mm)	Loft (mm)	Mesh
Sample 1	62.71	0.787402	20	22
Sample 2	59.09	0.905512	23	25
Sample 3	54.15	1.929134	49	8.75
Sample 4	52.65	2.007874	51	8

The results of the test is shown graphically in Figure 14. Figure 14 is comprised of a bar graph that shows fluid overflow (ml) for each sample 1 - 4. Additionally, Figure 14 is comprised of a line graph that shows the inverse of the expanded thickness or loft of each sample. Overflow is defined as fluid that flows out of overflow pipe 172 of the Liquid Acquisition Apparatus 162 when 15 mL amount of fluid is delivered at 7 ml/sec into controlled volume chamber 168. The fluid that does not flow through overflow pipe 172 is absorbed by the sample160.

It can be seen from Figure 14, that the greater the loft for a particular sample, the less fluid overflow that is observed for a particular sample. The films of applicant's invention, i.e. Samples 3 and 4 have a markedly greater loft than the films having the prior art design, i.e. Samples 1 and 2. Samples 3 and 4 show a markedly lower amount of fluid overflow. It should be noted that the total void volume for Samples 1 and 2 is less than 550 cc/m^2 of sample material while the total void volume for Samples 3 and 4, which illustrate embodiments of applicant's invention, is more than 1000 cc/m^2. The preferred total void volume for applicant's invention is greater than 750 cc/m^2, more preferably greater than 875 cc/m^2, and most preferably greater than 1000 cc/m^2.

To further illustrate the substantial increase in void volume space of the films of the invention over existing films, microphotographs of Sample 2 and Sample 4 are set forth in Figures 15 and 16. Figures 15 and 16 show Samples 2 and 4 at 50X magnification. Figure 15 shows a plan view of samples 2 and 4. Figure 16 shows a side

cross-sectional view of samples 2 and 4. The substantial increase in void volume space is apparent from each of Figures 15 and 16.

Finally, microphotographs of known magnification and scale of dimensions were taken of each of Samples 1-4 to enable empirical calculations of void volume spaces. While the cells of the embodiments described herein are best approximated as a geometric frustum, as taught in Thompson 4,939,135, it is within the scope of the invention to include other cell shapes such as substantially straight walled cells, as taught in Radel 4,342,314, and cells which converge to a narrow point and then diverge again toward the apertured end, as taught by Rose 4,895,749. The resulting geometric calculation for void volume space data for Female Side void volume, Male Side void volume, and the Total Void Volumes are shown below in Table 3.

Table 3

Sample No.	Loft (mils)	Mesh	Cells/m² of film	Female side volume (cc/m²)	Male side volume (cc/m²)	Total Void Volume (cc/m²)
1	20	22	872,170	189	339	528
2	23	25	1,090,755	247	236	483
3	49	8.75	131,771	294	752	1046
4	51	8	105,649	1357	475	1832

It can be seen from table 3 that the "spill-under" embodiment of applicant's invention, demonstrated by Sample 3 has a substantially greater male side void volume, i.e., 752 cc/m², than do any of the other samples. The "spill-over" embodiment of applicant's invention, demonstrated by Sample 4 has a substantially greater female side volume, i.e. 1357 cc/m², than do any of the other samples.

From the above, it will be appreciated that applicant's invention will reduce or eliminate the wetness sensation felt by the user during and after repeated insults as unabsorbed fluid flows from an area of saturated core material to an area of unsaturated core material for absorption. Applicant's invention redirects unabsorbed fluids to non-

saturated areas of a core material16 while preventing substantial contact of the unabsorbed fluids with the topsheet 12. The invention of the applicant prevents an unpleasant feeling of wetness of the topsheet 12 while providing the ability to receive multiple insults at a singular point.

The present invention is illustrated herein by example, and various modifications may be made by a person of ordinary skill in the art. For example, various geometries, materials and multiple-layer film combinations fall within the scope of the invention. As another example, although the present invention has been described in connection with diapers, incontinent articles, sanitary napkins, and related products, the absorbent articles of the present invention are fully applicable to other, similar products, including, without limitation, other body coverings where absorbent materials may be desired. Such body coverings may include medical drapes, medical gowns, medical smocks, ostomy appliances, feminine hygiene products, body transfer sheets, fluid collection pouches, industrial clean room garments and other products.

It is therefore believed that the present invention will be apparent from the foregoing description. While the methods and articles shown or described have been characterized as being preferred it should be obvious that various changes and modifications may be made therefrom without departing from the spirit and scope of the invention as defined in the following claims.

CLAIMS

1. An absorbent article comprising:

a topsheet;

an absorbent core material; and

an acquisition distribution layer between said topsheet and said absorbent core material, wherein said acquisition distribution layer is a three dimensional apertured film having a female side and male side, wherein said acquisition distribution layer defines a void volume space.

2. The absorbent article according to claim 1 wherein:

said acquisition distribution layer has at least one raised ridge extending towards said topsheet from said female side of said acquisition distribution layer.

3. The absorbent article according to claim 2 wherein:

said raised ridge runs in a longitudinal direction of the absorbent article for directing unabsorbed fluid to flow primarily in a desired direction with respect to the absorbent article for reducing side leakage from said absorbent article.

4. The absorbent article according to claim 1 wherein:

said acquisition distribution layer is a multi-layer film having a first three dimensional apertured film adjacent a second three dimensional apertured film;

said second three dimensional apertured film is affixed to a female side of said first three dimensional apertured film wherein said first three dimensional apertured film has at least one raised ridge; and

a void area is created between said second three dimensional apertured film and said first three dimensional apertured film for containing unabsorbed fluid and substantially preventing contact of the fluid with the topsheet.

5. The absorbent article according to claim 1 wherein:

said acquisition distribution layer is a multi-layer film having a first three dimensional apertured film adjacent a second three dimensional apertured film;

said second three dimensional apertured film is affixed to a female side of said first three dimensional apertured film; and

a void area is created between said second three dimensional apertured film and said first three dimensional apertured film for containing unabsorbed fluid and substantially preventing contact of the fluid with the topsheet.

6. The absorbent article according to claim 1 wherein:

said topsheet is a vacuum formed film layer.

7. The absorbent article according to claim 1 wherein:

said acquisition distribution layer has a plurality of cells wherein adjacent cells each have a hole that allows insult fluids to be rapidly acquired through the acquisition distribution layer.

8. The absorbent article according to claim 7 wherein:

said plurality of cells have a mesh count of between approximately 2 and 25.

9. The absorbent article according to claim 7 wherein:

said plurality of cells have a mesh count of between approximately 4 and 15.

10. The absorbent article according to claim 7 wherein:

said plurality of cells have a mesh count of approximately 8.

11. The absorbent article according to claim 7 wherein:

said cells have a shape selected from a group comprising hexagonal, circular, oval, elliptical, or polygonal.

12. The absorbent article according to claim 7 wherein:

said plurality of cells form a cell pattern that is a combination of at least two shapes selected from a group comprising hexagonal, circular, oval, elliptical, or polygonal.

13. The absorbent article according to claim 1 wherein:

said void volume space is a total void volume space of the acquisition distribution layer, wherein said total void volume space is greater than 500 cm^3/m^2.

14. The absorbent article according to claim 1 wherein:

said void volume space is a total void volume space of the acquisition distribution layer, wherein said total void volume space is greater than 750 cm^3/m^2.

15. The absorbent article according to claim 1 wherein:

said void volume space is a total void volume space of the acquisition distribution layer, wherein said total void volume space is greater than 1000 cm^3/m^2.

16. The absorbent article according to claim 1 wherein:

said void volume space is on the female side of the acquisition distribution layer to facilitate spill-over of unabsorbed fluid.

17. The absorbent article according to claim 16 wherein:

said void volume space on said female side is greater than 500 cm^3/m^2.

18. The absorbent article according to claim 16 wherein:

said void volume space on said female side is greater than 750 cm^3/m^2.

19. The absorbent article according to claim 16 wherein:

said void volume space on said female side is greater than 1000 cm^3/m^2.

20. The absorbent article according to claim 1 wherein:

said void volume space is on the male side of the acquisition distribution layer to facilitate spill-under of unabsorbed fluid.

21. The absorbent article according to claim 20 wherein:

said void volume space on said male side is greater than 500 cm^3/m^2.

22. The absorbent article according to claim 20 wherein:

said void volume space on said male side is greater than 600 cm^3/m^2.

23. The absorbent article according to claim 20 wherein:

said void volume space on said male side is greater than 750 cm^3/m^2.

24. An absorbent article comprising:

a first three dimensional apertured film having a female side and a male side, wherein said first three dimensional apertured film defines a void volume space;

a second three dimensional apertured film that is affixed to said female side of said first three dimensional apertured film;

a void area between said second three dimensional apertured film and said first three dimensional apertured film for containing unabsorbed fluid; and

an absorbent core material adjacent said male side of said first three dimensional apertured film.

25. The absorbent article according to claim 24 further comprising:

a topsheet adjacent a female side of said second three dimensional apertured film.

26. The absorbent article according to claim 24 wherein:

a total void volume space is defined by said void volume space of the first and second three dimensional apertured film layers, wherein said total void volume space in greater than 500 cm^3.

27. The absorbent article according to claim 24 wherein:

a total void volume space is defined by said void volume space of the first and second three dimensional apertured film layers, wherein said total void volume space is greater than 750 cm^3/m^2.

28. The absorbent article according to claim 24 wherein:

a total void volume space is defined by said void volume space of the first and second three dimensional apertured film layers, wherein said total void volume space is greater than 1000 cm^3/m^2.

29. The absorbent article according to claim 24 wherein:

said void volume space is on the female side of the first three dimensional apertured film to facilitate spill-over of unabsorbed fluid.

30. The absorbent article according to claim 26 wherein:

said void volume space on said female side is greater than 750 cm^3/m^2.

31. The absorbent article according to claim 26 wherein:

said void volume space on said female side is greater than 1000 cm^3/m^2.

32. The absorbent article according to claim 26 wherein:

said void volume space on said female side is greater than 1250 cm^3/m^2.

33. The absorbent article according to claim 24 wherein:

said void volume space is on the male side of the first three dimensional apertured film to facilitate spill-under of unabsorbed fluid.

34. The absorbent article according to claim 30 wherein:

said void volume space on said male side is greater than 500 cm^3/m^2.

35. The absorbent article according to claim 30 wherein:

said void volume space on said male side is greater than 600 cm^3/m^2.

36. The absorbent article according to claim 30 wherein:

said void volume space on said male side is greater than 750 cm^3/m^2.

37. A method of avoiding a wetness sensation of a topsheet in an absorbent article comprising:

passing fluid through an apertured acquisition distribution layer to an area proximate a core material; and

redirecting unabsorbed fluids to an area of non-saturated core material via void spaces defined by a male side of said acquisition distribution layer material.

38. The method according to claim 37 wherein:

said step of redirecting unabsorbed fluids includes providing raised ridges that define channels for directing fluids in a desired direction of the apertured acquisition distribution layer.

39. The method according to claim 37 wherein:

said step of passing fluid through an apertured acquisition distribution layer comprises passing fluid through a first three dimensional apertured film and second three dimensional apertured film.

40. A method of avoiding a wetness sensation of a topsheet in an absorbent article comprising:

providing an apertured acquisition distribution layer defining a plurality of buckets that communicate with a core material at an apex opening of said plurality of buckets;

allowing unabsorbed fluids to fill one of said plurality of buckets when an area of core material beneath said one of said buckets becomes saturated; and

allowing said unabsorbed fluids to spill over from said one of said buckets to an adjacent bucket so that said unabsorbed fluid may contact unsaturated areas of said core material.

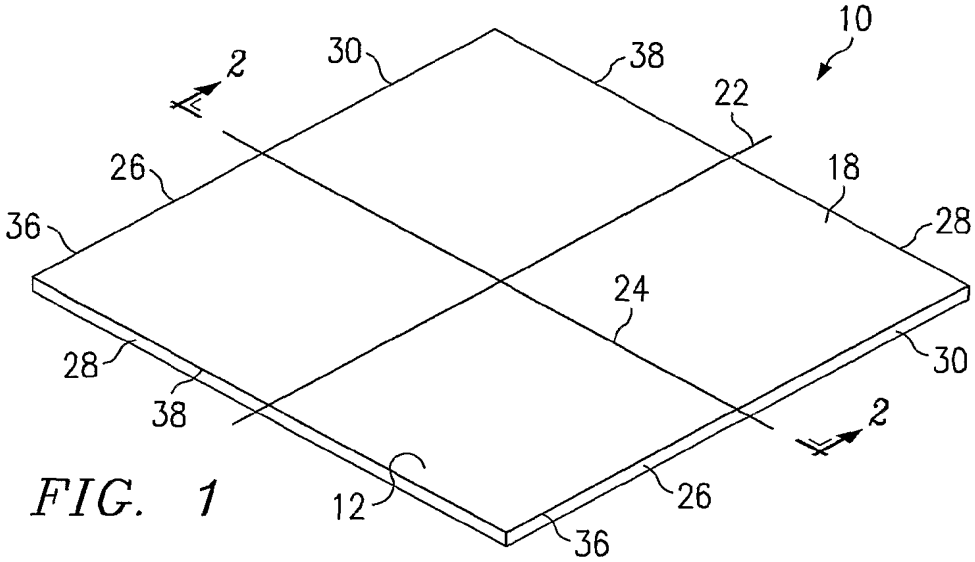

FIG. 1

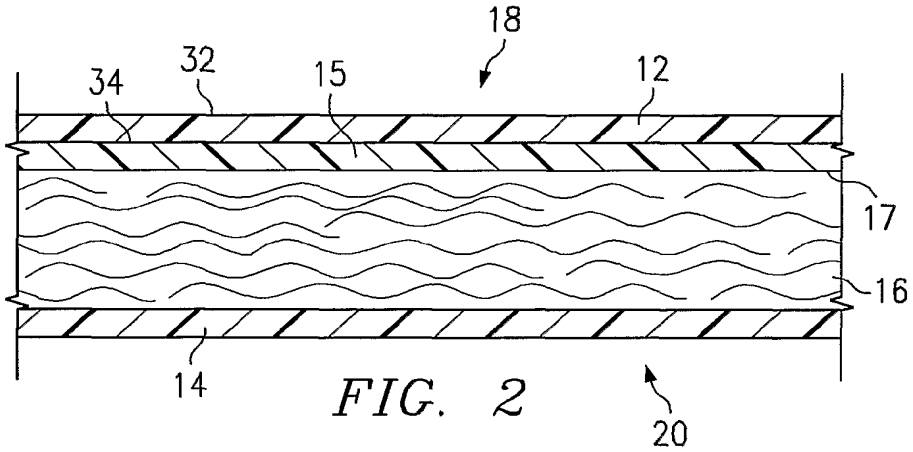

FIG. 2

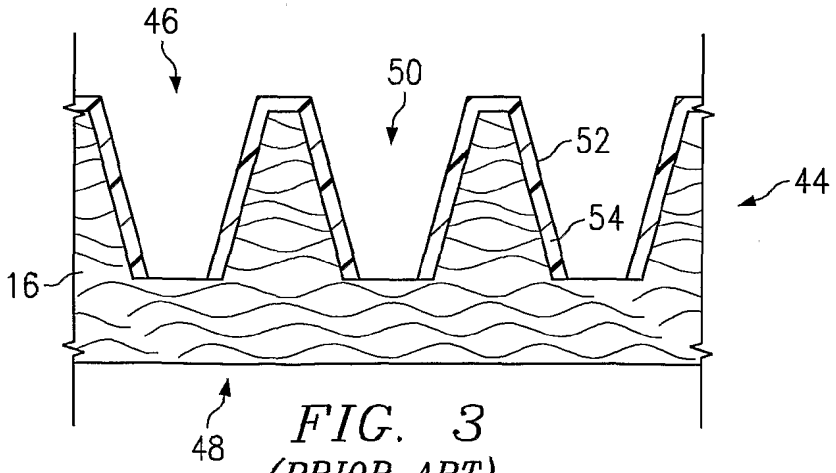

FIG. 3
(PRIOR ART)

2/6

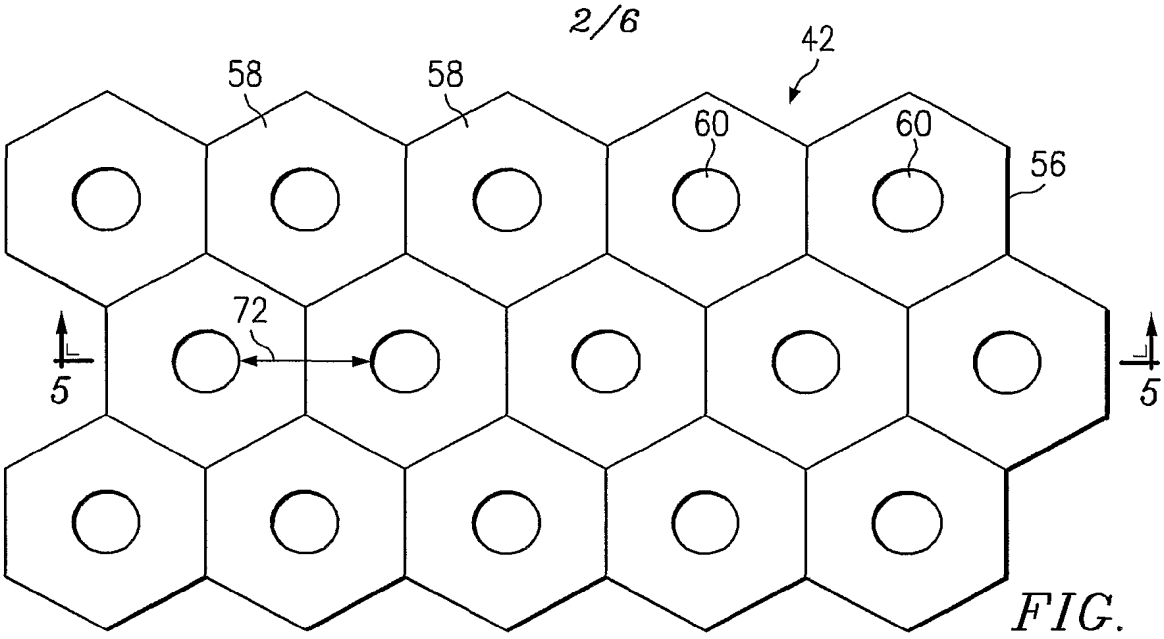

FIG. 4

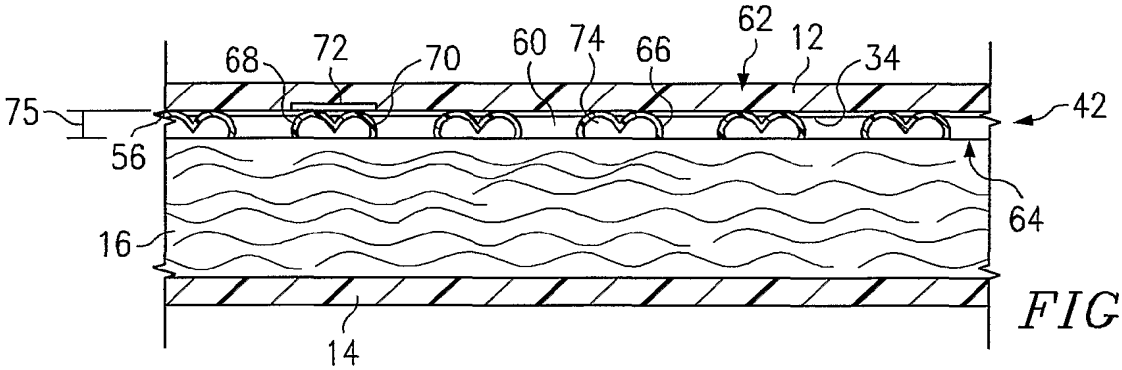

FIG. 5

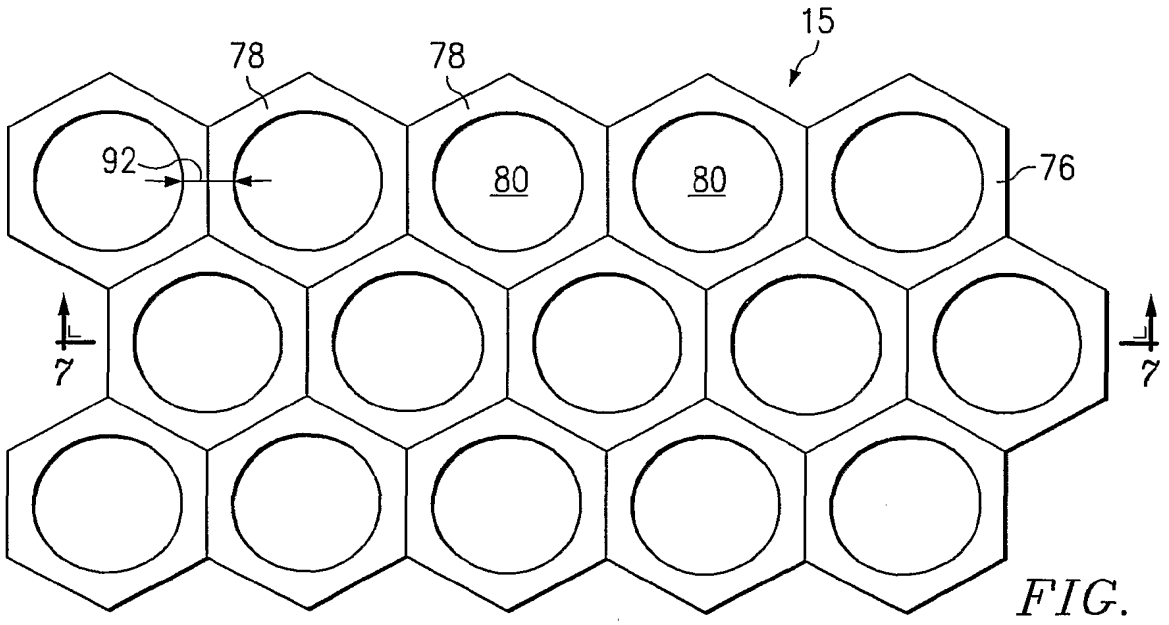

FIG. 6

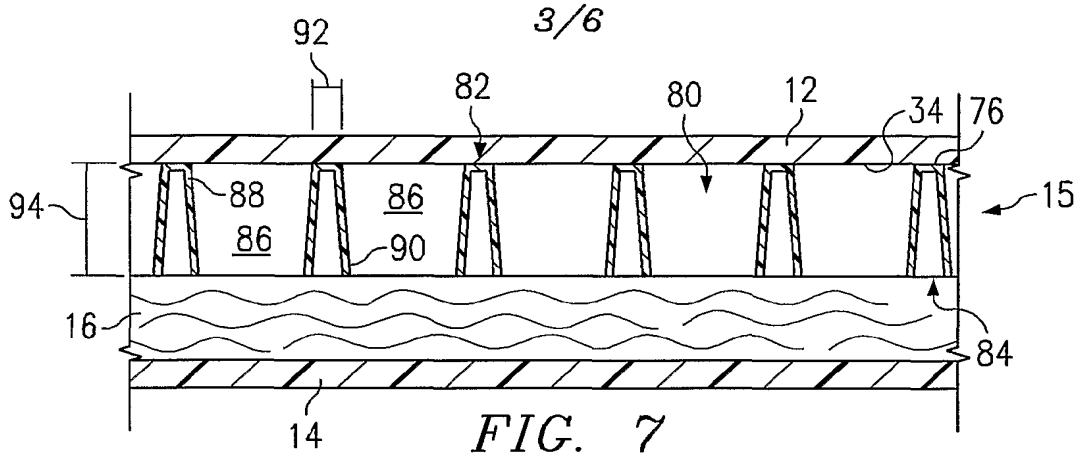

FIG. 7

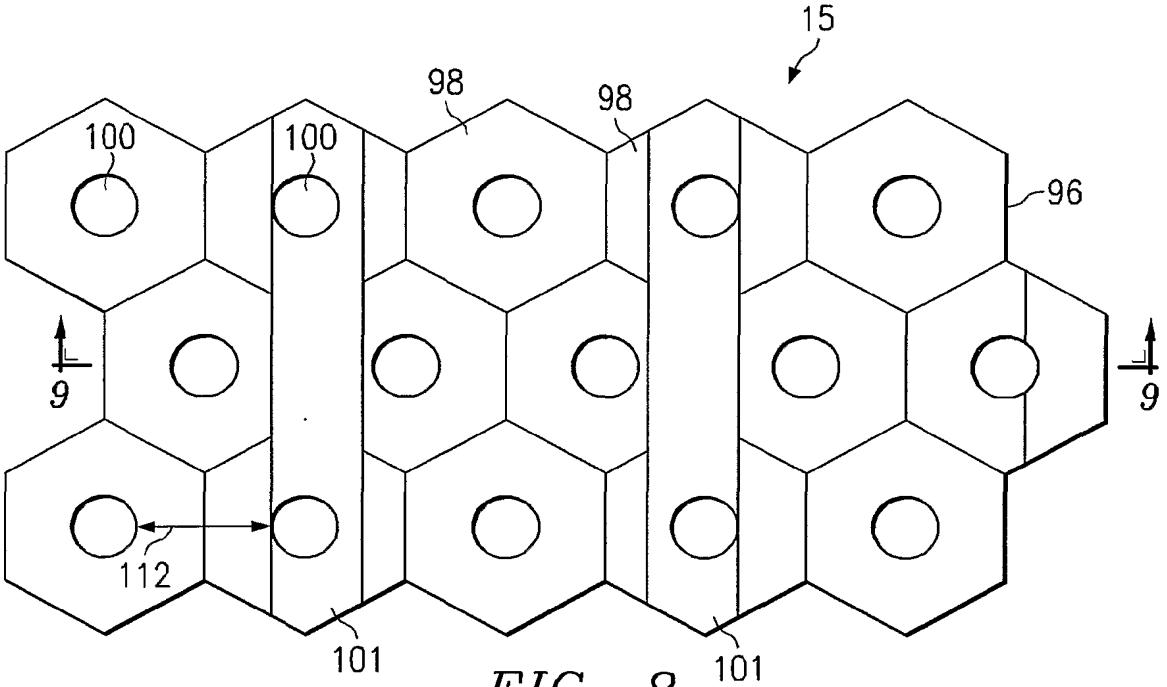

FIG. 8

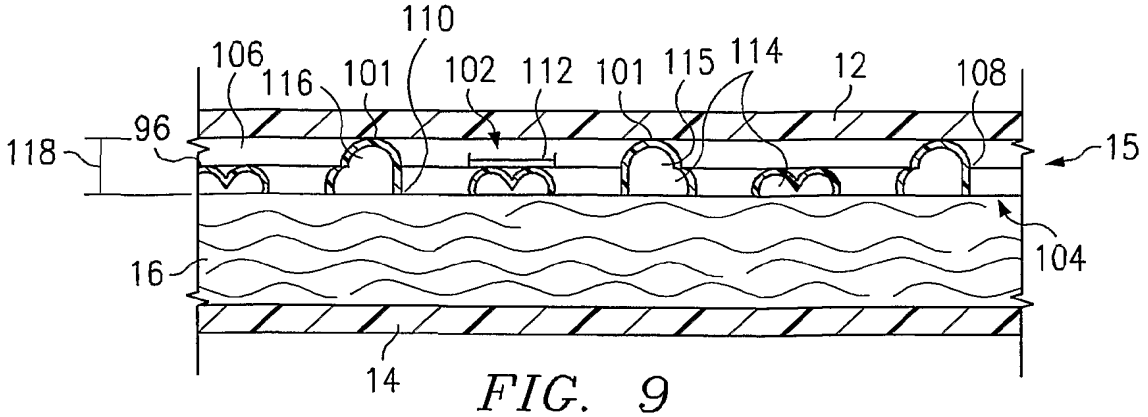

FIG. 9

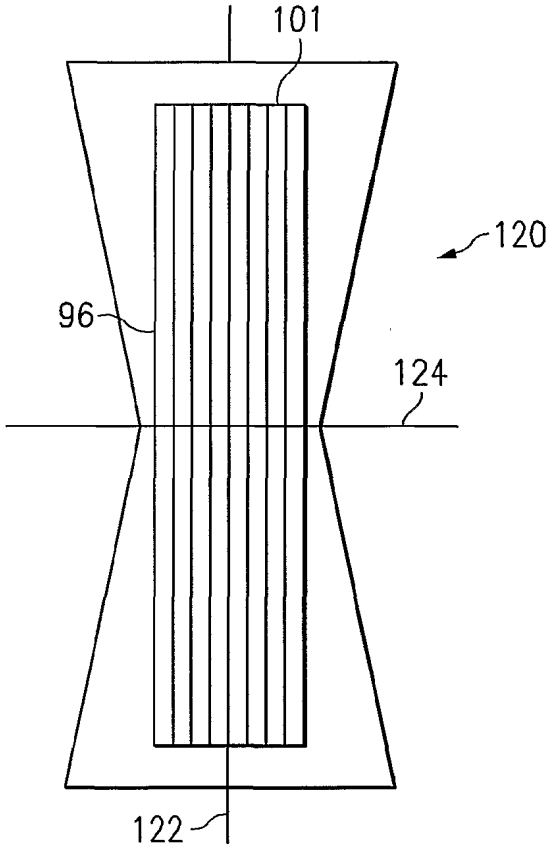
101
120
96
124
122

FIG. 10

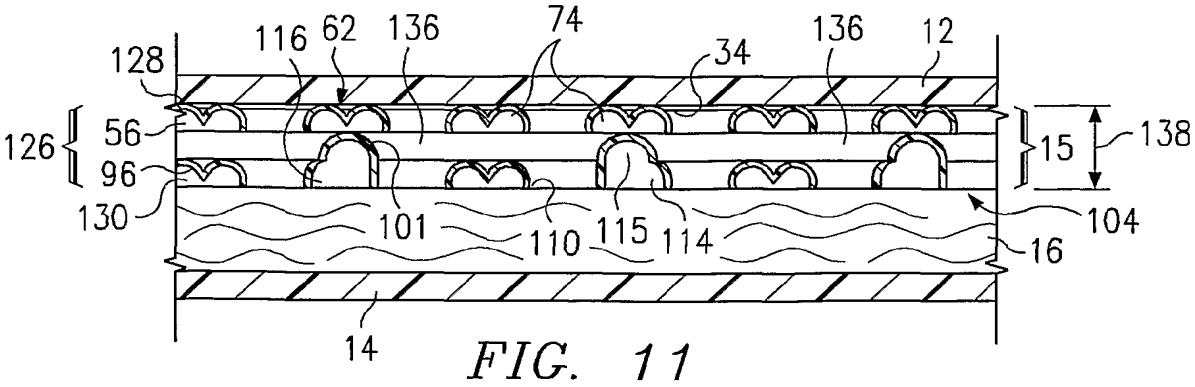
128
116
62
136
74
34
136
12
126
56
96
130
101
110
115
114
15
138
104
16
14

FIG. 11

FIG. 12

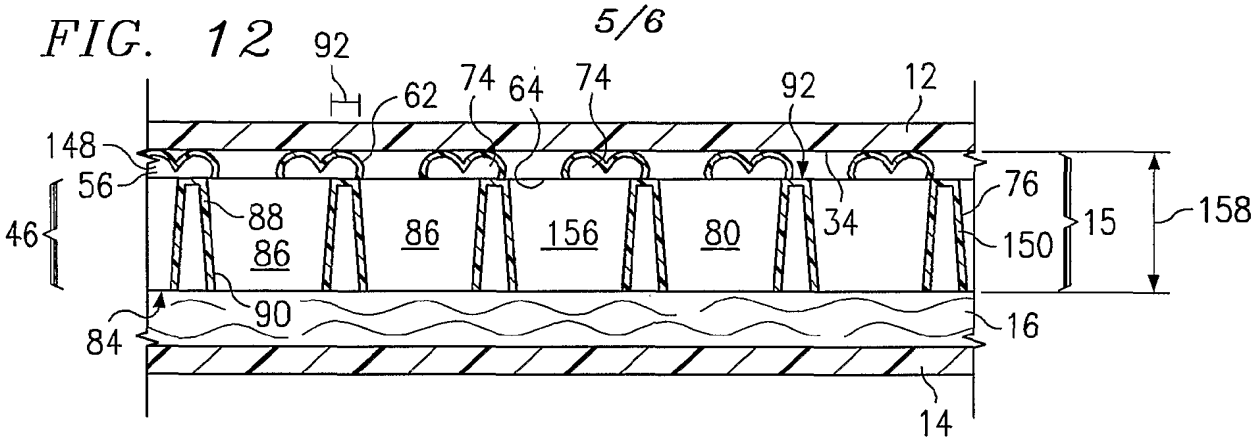

FIG. 13

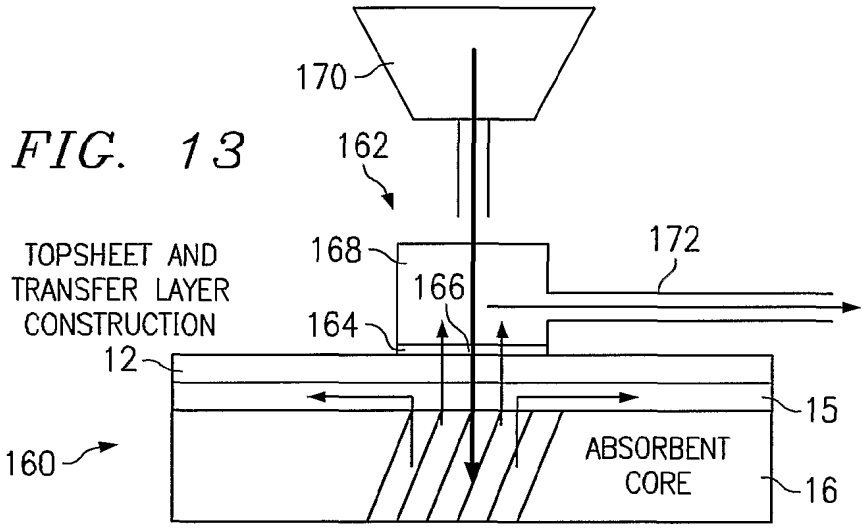

FIG. 14

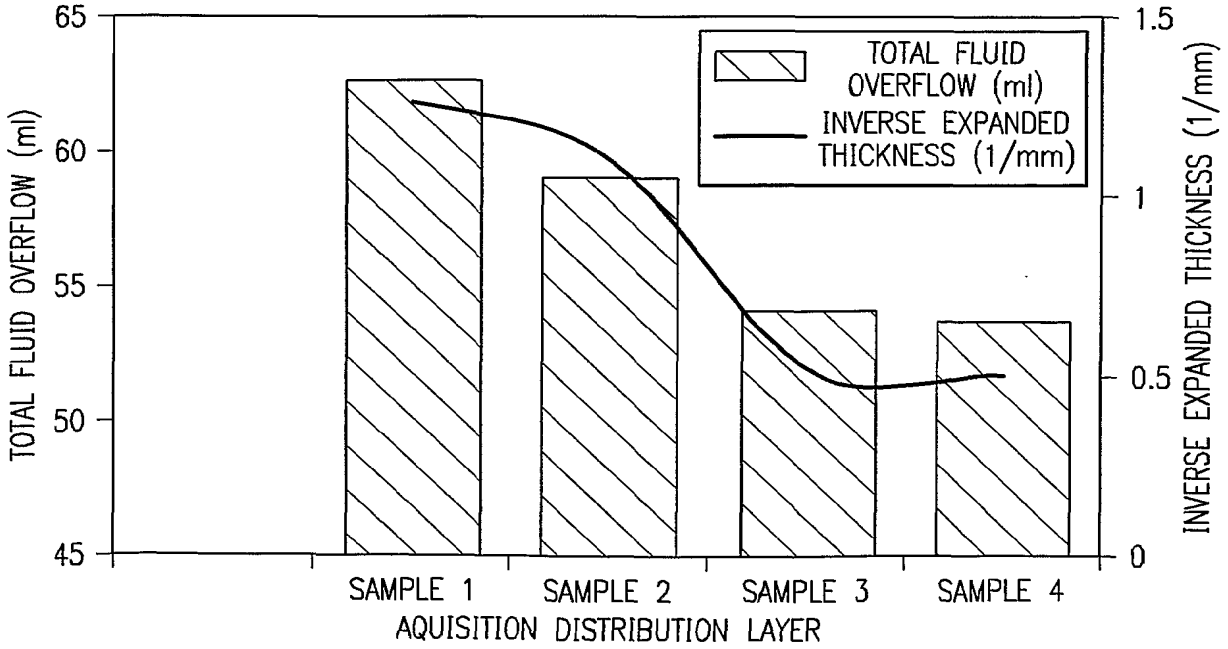

FIG. 15

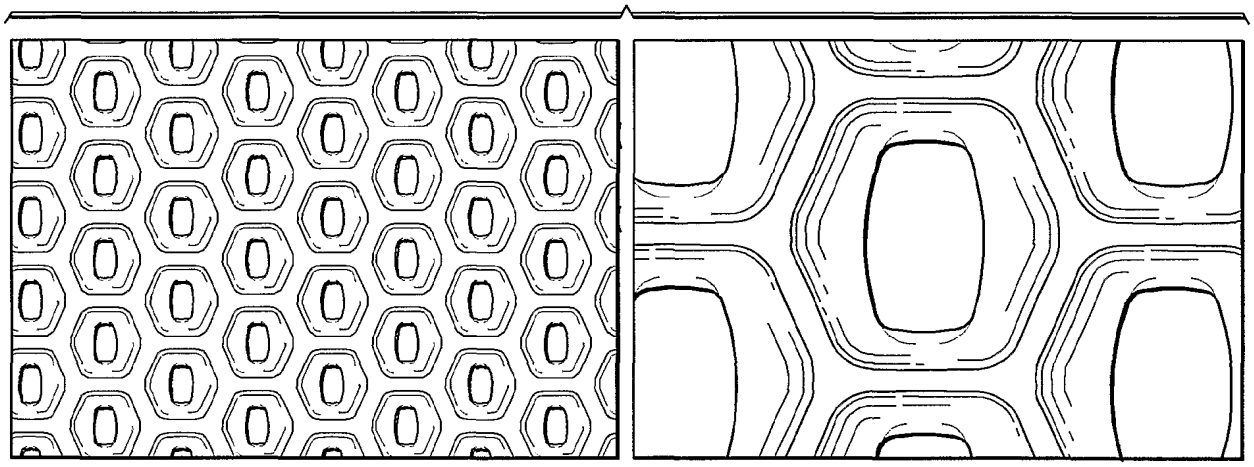

SAMPLE 2 SAMPLE 4

FIG. 16

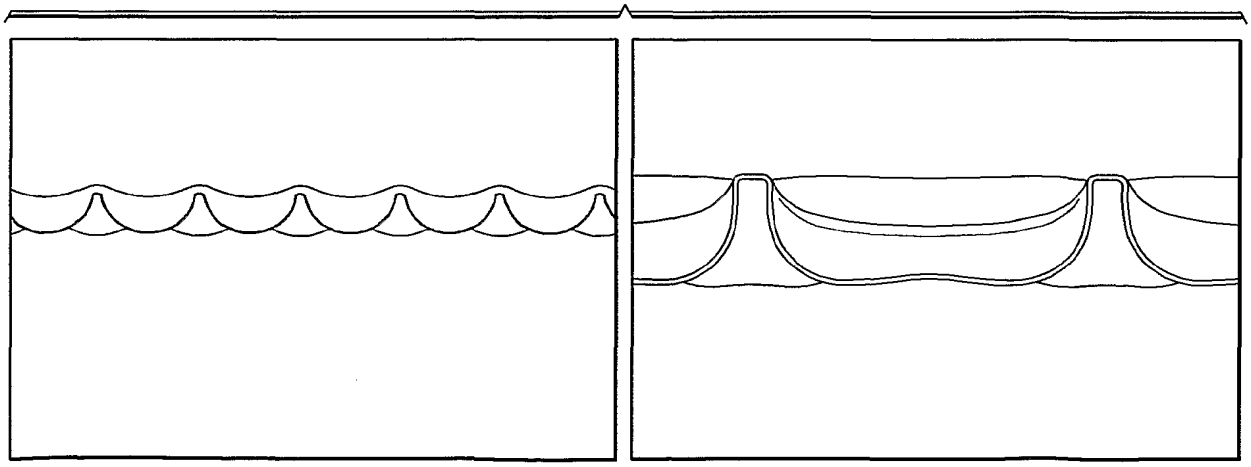

SAMPLE 2 SAMPLE 4

INTERNATIONAL SEARCH REPORT

Inte nal Application No
PCT/US 01/29394

A. CLASSIFICATION OF SUBJECT MATTER
IPC 7 A61F13/537

According to International Patent Classification (IPC) or to both national classification and IPC

B. FIELDS SEARCHED

Minimum documentation searched (classification system followed by classification symbols)
IPC 7 A61F

Documentation searched other than minimum documentation to the extent that such documents are included in the fields searched

Electronic data base consulted during the international search (name of data base and, where practical, search terms used)

EPO-Internal

C. DOCUMENTS CONSIDERED TO BE RELEVANT

Category °	Citation of document, with indication, where appropriate, of the relevant passages	Relevant to claim No.
X	EP 0 040 084 A (PROCTER & GAMBLE) 18 November 1981 (1981-11-18) claims; figures	1,4,6,7
A		8-24, 26-37,40

X	US 3 945 386 A (JULIEN BRIAN E ET AL) 23 March 1976 (1976-03-23) the whole document	1,7,11, 16
A		8-10, 12-15, 17-19, 29-32,40

	-/--	

[X] Further documents are listed in the continuation of box C.

[X] Patent family members are listed in annex.

° Special categories of cited documents :

"A" document defining the general state of the art which is not considered to be of particular relevance

"E" earlier document but published on or after the international filing date

"L" document which may throw doubts on priority claim(s) or which is cited to establish the publication date of another citation or other special reason (as specified)

"O" document referring to an oral disclosure, use, exhibition or other means

"P" document published prior to the international filing date but later than the priority date claimed

"T" later document published after the international filing date or priority date and not in conflict with the application but cited to understand the principle or theory underlying the invention

"X" document of particular relevance; the claimed invention cannot be considered novel or cannot be considered to involve an inventive step when the document is taken alone

"Y" document of particular relevance; the claimed invention cannot be considered to involve an inventive step when the document is combined with one or more other such documents, such combination being obvious to a person skilled in the art.

"&" document member of the same patent family

Date of the actual completion of the international search	Date of mailing of the international search report
19 February 2002	01/03/2002

Name and mailing address of the ISA	Authorized officer
European Patent Office, P.B. 5818 Patentlaan 2 NL – 2280 HV Rijswijk Tel. (+31-70) 340-2040, Tx. 31 651 epo nl, Fax: (+31-70) 340-3016	Mirza, A

Form PCT/ISA/210 (second sheet) (July 1992)

INTERNATIONAL SEARCH REPORT

Inte nal Application No
PCT/US 01/29394

C.(Continuation) DOCUMENTS CONSIDERED TO BE RELEVANT

Category °	Citation of document, with indication,where appropriate, of the relevant passages	Relevant to claim No.
X	EP 0 788 874 A (MCNEIL PPC INC) 13 August 1997 (1997-08-13) page 7, line 13 - line 16; claims; figure 8	1,7,37
A		4,5, 13-15, 26-28

X	US 5 728 446 A (SERVATIUS JAMES A ET AL) 17 March 1998 (1998-03-17) claims; figures	1,2,16
A		3,17-19, 29-32,38

X	US 5 603 707 A (TROMBETTA LIBERATORE A ET AL) 18 February 1997 (1997-02-18) claims; figures	1
A		6,13-19, 29-32

A	WO 97 06765 A (CAMELOT SUPERABSORBENTS LTD ;CAMELOT SUPERABSORBENTS BV (NL); DAN) 27 February 1997 (1997-02-27) the whole document	1-40

A	WO 95 24877 A (PROCTER & GAMBLE) 21 September 1995 (1995-09-21) page 9, line 29 -page 10, line 2; claims; figures	1-40

A	GB 2 262 906 A (KAO CORP) 7 July 1993 (1993-07-07) claims; figures	1-3,6,7, 12,37, 38,40

X	DE 19 10 334 A (MORRISON WILLARD L.) 25 September 1969 (1969-09-25) page 7, line 23 - line 30	1
A	page 10, line 1 - line 12; figures 4,4A	2,7, 16-19, 29-32,40

Form PCT/ISA/210 (continuetion of second sheet) (July 1992)

INTERNATIONAL SEARCH REPORT

Inte nal Application No
PC / US 01/29394

Patent document cited in search report		Publication date	Patent family member(s)			Publication date
EP 0040084	A	18-11-1981	US	4323069	A	06-04-1982
			AT	15591	T	15-10-1985
			CA	1150904	A1	02-08-1983
			DE	3172301	D1	24-10-1985
			EP	0040084	A2	18-11-1981
			JP	57089861	A	04-06-1982
			PH	17925	A	31-01-1985
US 3945386	A	23-03-1976	NONE			
EP 0788874	A	13-08-1997	AT	184541	T	15-10-1999
			AU	714660	B2	06-01-2000
			AU	1265597	A	21-08-1997
			BR	9700940	A	01-09-1998
			CA	2197270	A1	13-08-1997
			CN	1184627	A	17-06-1998
			CZ	9700411	A3	16-06-1999
			DE	69700500	D1	21-10-1999
			DE	69700500	T2	03-02-2000
			DK	788874	T3	03-01-2000
			EP	0788874	A1	13-08-1997
			ES	2137038	T3	01-12-1999
			GR	3031734	T3	29-02-2000
			HK	1002269	A1	20-04-2000
			HU	9700426	A2	28-10-1997
			IL	120207	A	31-10-2000
			JP	10000712	A	06-01-1998
			NO	970617	A	13-08-1997
			NZ	314221	A	28-07-1998
			PL	318429	A1	18-08-1997
			SG	66349	A1	20-07-1999
			TR	9700108	A2	21-08-1997
			ZA	9701139	A	11-08-1998
US 5728446	A	17-03-1998	US	5514120	A	07-05-1996
			WO	9909923	A1	04-03-1999
			EP	1017344	A1	12-07-2000
			AU	4087397	A	16-03-1999
US 5603707	A	18-02-1997	AU	1051297	A	19-06-1997
			BR	9611782	A	23-02-1999
			CN	1207664	A	10-02-1999
			EP	0863736	A1	16-09-1998
			JP	11500651	T	19-01-1999
			KR	266496	B1	15-09-2000
			WO	9719661	A1	05-06-1997
			ZA	9609225	A	11-06-1997
WO 9706765	A	27-02-1997	AU	6871796	A	12-03-1997
			CA	2234637	A1	27-02-1997
			WO	9706765	A1	27-02-1997
			EP	0844861	A1	03-06-1998
			US	2002007167	A1	17-01-2002
WO 9524877	A	21-09-1995	US	5500270	A	19-03-1996
			AT	193824	T	15-06-2000
			AU	1971995	A	03-10-1995
			AU	8954798	A	07-01-1999

INTERNATIONAL SEARCH REPORT

Inte[illegible]nal Application No
PCT/US 01/29394

Patent document cited in search report		Publication date	Patent family member(s)			Publication date
WO 9524877	A		BR	9507065	A	30-09-1997
			CA	2184250	A1	21-09-1995
			CN	1143902	A	26-02-1997
			CZ	9602666	A3	12-02-1997
			DE	69517520	D1	20-07-2000
			DE	69517520	T2	19-10-2000
			EG	20514	A	30-06-1999
			EP	0750483	A1	02-01-1997
			ES	2146753	T3	16-08-2000
			FI	963634	A	13-09-1996
			HU	78002	A2	28-05-1999
			JP	9510374	T	21-10-1997
			NO	963804	A	14-11-1996
			WO	9524877	A1	21-09-1995
			ZA	9502080	A	11-12-1995
GB 2262906	A	07-07-1993	JP	5317359	A	03-12-1993
			JP	3065756	B2	17-07-2000
			JP	5168661	A	02-07-1993
			HK	120496	A	19-07-1996
DE 1910334	A	25-09-1969	CA	939451	A1	08-01-1974
			DE	1910334	A1	25-09-1969
			FR	2003308	A1	07-11-1969
			GB	1263311	A	09-02-1972
			US	3762415	A	02-10-1973

(12) INTERNATIONAL APPLICATION PUBLISHED UNDER THE PATENT COOPERATION TREATY (PCT)

(19) World Intellectual Property Organization
International Bureau

(43) International Publication Date
1 September 2005 (01.09.2005)

PCT

(10) International Publication Number
WO 2005/079542 A2

(51) International Patent Classification: Not classified

(21) International Application Number: PCT/US2005/005558

(22) International Filing Date: 22 February 2005 (22.02.2005)

(25) Filing Language: English

(26) Publication Language: English

(30) Priority Data:
10/783,428 20 February 2004 (20.02.2004) US

(71) Applicant *(for all designated States except US)*: **TREDEGAR FILM PRODUCTS CORPORATION** [US/US]; 1100 Boulders Parkway, Richmond, VA 23225 (US).

(72) Inventors: **CREE, James, W.**; 15501 Chesdin Landing Court, Chersterfield, VA 23838 (US). **IULIANETTI, Lino**; Via S. Clemente, 50, I-65029 Torre dei Passeri (PE) (IT). **SPLENDIANI, Antonietta**; Via Monte Secine, 16, I-65125 Pescara (IT).

(74) Agent: **TESSARI, Joseph, A.**; Tredegar Film Products Corporation, 1100 Boulders Parkway, Richmond, VA 23225 (US).

(81) Designated States *(unless otherwise indicated, for every kind of national protection available)*: AE, AG, AL, AM, AT, AU, AZ, BA, BB, BG, BR, BW, BY, BZ, CA, CH, CN, CO, CR, CU, CZ, DE, DK, DM, DZ, EC, EE, EG, ES, FI, GB, GD, GE, GH, GM, HR, HU, ID, IL, IN, IS, JP, KE, KG, KP, KR, KZ, LC, LK, LR, LS, LT, LU, LV, MA, MD, MG, MK, MN, MW, MX, MZ, NA, NI, NO, NZ, OM, PG, PH, PL, PT, RO, RU, SC, SD, SE, SG, SK, SL, SY, TJ, TM, TN, TR, TT, TZ, UA, UG, US, UZ, VC, VN, YU, ZA, ZM, ZW.

(84) Designated States *(unless otherwise indicated, for every kind of regional protection available)*: ARIPO (BW, GH, GM, KE, LS, MW, MZ, NA, SD, SL, SZ, TZ, UG, ZM, ZW), Eurasian (AM, AZ, BY, KG, KZ, MD, RU, TJ, TM), European (AT, BE, BG, CH, CY, CZ, DE, DK, EE, ES, FI, FR, GB, GR, HU, IE, IS, IT, LT, LU, MC, NL, PL, PT, RO, SE, SI, SK, TR), OAPI (BF, BJ, CF, CG, CI, CM, GA, GN, GQ, GW, ML, MR, NE, SN, TD, TG).

Published:
— *without international search report and to be republished upon receipt of that report*

For two-letter codes and other abbreviations, refer to the "Guidance Notes on Codes and Abbreviations" appearing at the beginning of each regular issue of the PCT Gazette.

(54) Title: ABSORBENT DEVICE USING AN APERTURED NONWOVEN AS AN ACQUISITION DISTRIBUTION LAYER

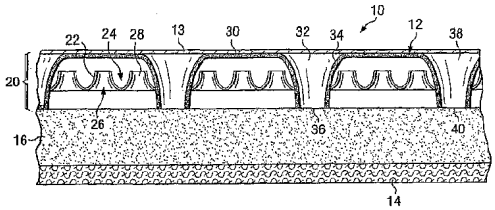

(57) Abstract: An absorbent article having a topsheet, an intermediate layer, an absorbent core, and a backsheet, wherein the intermediate layer is formed of an apertured nonwoven. The intermediate layer may include stiffening means such as apertured film or an additional nonwoven layer.

WO 2005/079542 A2

ABSORBENT DEVICE USING AN APERTURED NONWOVEN AS AN ACQUISITION DISTRIBUTION LAYER

CROSS-REFERENCE TO RELATED APPLICATIONS

This application is a continuation-in-part of U.S. patent application Ser. No. 10/308,312 filed on Dec. 2, 2002.

TECHNICAL FIELD

This invention relates to absorbent articles, and more particularly to intermediate layers of absorbent articles.

BACKGROUND

Modern absorbent articles are typically comprised of four basic layers: a topsheet, an absorbent core, an intermediate layer between the topsheet and the absorbent core, and a backsheet opposite the topsheet. Several design criteria affect the choice of materials for these layers. Both nonwovens and apertured films are used as topsheets, each having advantages and disadvantages. Absorbent cores may be made of many different combinations of materials, including pulp and other fibrous materials as well as super absorbent particles or fibers.

Backsheets are typically made of films; sometimes breathable materials may be used, but the primary concern is that the backsheet remain impervious to fluid leakage. Intermediate layers are a more recent addition to the absorbent article market.

In the past, absorbent articles may have contained nonwoven materials between the topsheet and the absorbent core to reduce rewet from the absorbent core to the surface. Recently, intermediate layers of three-dimensional formed film have proven exceptionally successful at preventing rewet as well as increasing strikethrough performance and masking performance.

SUMMARY

In an absorbent article having a topsheet and an absorbent core, a three-dimensional, apertured, non-woven material is positioned between the topsheet and the absorbent core to improve the strikethrough, rewet, and fluid distribution characteristics of the absorbent article. The three-dimensional, apertured, nonwoven material may be a single layer of

nonwoven material, multiple layers of nonwoven material, or a layer of nonwoven material combined with an apertured film.

The details of one or more embodiments of the invention are set forth in the accompanying drawings and the description below. Other features, objects, and advantages of the invention will be apparent from the description and drawings, and from the claims.

DESCRIPTION OF DRAWINGS

FIG. 1 is a cross sectional view of a first embodiment of the absorbent article of the invention.

FIG. 2 is a cross sectional view of a second embodiment of the absorbent article of the invention.

FIG. 3 is a cross sectional view of a third embodiment of the absorbent article of the invention.

FIG. 4 is a cross sectional view of the method for manufacturing a composite topsheet.

FIG. 5 is a cross sectional view of a fourth embodiment of the absorbent article of the invention.

Like reference symbols in the various drawings indicate like elements.

DETAILED DESCRIPTION

Definitions

As used herein, the term "substantially" means that a given property or parameter may vary by about 20% from the stated value.

As used herein, the term "absorbent article" means articles that absorb and contain body exudates. More specifically, the term refers to articles that are placed against or in proximity to the body of a wearer for absorbing and containing various exudates discharged from the body.

For example, "absorbent article", as used herein, includes diapers, incontinent articles, sanitary napkins, pantiliners, bandages, and other articles used to absorb body exudates.

The term "diaper" refers to a garment typically worn by infants and incontinent persons that is drawn up between the legs and fastened about the waist of the wearer. Examples of diapers from the prior art include diapers described in U.S. Pat. Re. No. 26,152, issued to Duncan, et al. on Jan. 31, 1967; U.S. Pat. No. 3,860,003 issued to Buell on Jan. 14, 1975; U.S. Pat. No. 4,610,678 issued to Weisman, et al. on Sep. 9, 1986; U.S. Pat. No.

4,673,402 issued to Weisman, et al. on Jun. 16, 1987; U.S. Pat. No. 4,695,278 issued to Lawson on Sep. 22, 1987; U.S. Pat. No. 4,704,115 issued to Buell on Nov. 3, 1987; U.S. Pat. No. 4,834,735 issued to Alemany, et al. on May 30, 1989; U.S. Pat. No. 4,888,231 issued to Angstadt on Dec. 19, 1989; and U.S. Pat. No. 4,909,803 issued to Aziz, et al. on Mar. 20, 1990.

The term "incontinent article" refers to pads, undergarments, e.g., pads held in place by a suspension system, such as a belt, or other device, inserts for absorbent articles, capacity boosters for absorbent articles, briefs, bed pads, and similar devices, whether worn by adults or other incontinent persons.

Examples of incontinent articles include those disclosed in U.S. Pat. No. 4,253,461 issued to Strickland, et al. on Mar. 3, 1981; U.S. Pat. Nos. 4,597,760 and 4,597,761 issued to Buell; the above-mentioned U.S. Pat. Nos. 4,704,115; 4,909,802 issued to Ahr, et al.; U.S. Pat. No. 4,964,860 issued to Gipson, et al. on Oct. 23, 1990; and in U.S. patent application Ser. Nos. 07/637,090 and 07/637,571 filed respectively by Noel, et al. and Feist, et al. on Jan. 3, 1991.

The term "pantiliner" refers to absorbent articles that are less bulky than sanitary napkins that are generally worn by women between their menstrual periods. Examples of pantiliners are disclosed in U.S. Pat. No. 4,738,676 entitled "Pantiliner" issued to Osborn on Apr. 19, 1988.

The term "sanitary napkin" refers to an article that is worn by a female adjacent to the pudendal region that is intended to absorb and contain various exudates that are discharged from the body, e.g., blood, menses, and urine.

Examples of sanitary napkins are disclosed in U.S. Pat. No. 4,285,343, issued to McNair on Aug. 25, 1981; U.S. Pat. Nos. 4,589,876 and 4,687,478, issued to Van Tilburg on May 20, 1986 and Aug. 18, 1987 respectively; U.S. Pat. Nos. 4,917,697 and 5,007,906 issued to Osborn, et al. on Apr. 17, 1990 and Apr. 16, 1991, respectively; and U.S. Pat. Nos. 4,950,264, and 5,009,653 issued to Osborn on Aug. 21, 1990 and Apr. 23, 1991, respectively; and in U.S. patent application Ser. No. 07/605,583 filed Oct. 29, 1990 in the name of Visscher, et al.

Throughout this description, the expressions "topsheet" and "backsheet" denote the relationship of these materials or layers with respect to the absorbent core. It is understood that additional layers may be present between the absorbent core and the topsheet and backsheet, and that additional layers and other materials may be present on the side opposite the absorbent core from either the topsheet or the backsheet.

As used herein, the term "formed film" refers to a resilient three dimensionally formed film similar in structure to that produced by vacuum forming processes, as described in U.S. Pat. No. 4,456,570 to Thomas or U.S. Pat. No. 3,929,135 to Thompson, among others.

As used herein, the term "non-woven web" refers to a web that has a structure of individual fibers or threads that are interlaid, but not in any regular, repeating manner. Non-woven webs have been, in the past, formed by a variety of processes such as, for example, meltblowing processes, spunbonding process, and bonded carded web processes.

As used herein, the term "meltblown fibers", refers to fibers formed by extruding a molten thermoplastic material through a plurality of fine, usually circular, die capillaries as molten threads or filaments into a high velocity gas (e.g., air) stream that attenuates the filaments of molten thermoplastic material to reduce their diameter, which may be to a microfiber diameter.

Thereafter, the meltblown fibers are carried by the high velocity gas stream and are deposited on a collecting surface to form a web of randomly dispersed meltblown fibers.

As used herein, the term "stabilized" refers to a material of the present invention that is capable of being stored in a stable condition in any common or conventional web storage manner without the need for further heating or the additional of or joinder with other webs to stabilize the material. Such storage means would include for example, low tension rolls or festooned material in boxes.

As used herein, the term "melt-stabilized" refers to portions of a nonwoven web which have been subjected to localized heating and/or localized pressure to substantially consolidate the fibers of the nonwoven web into a stabilized film-like form.

As used herein, "pressure bonding" refers to a process in which a web is placed between two elements that exert pressure on the web to bind the various components of the web in the area where pressure is being exerted.

As used herein, the term "spunbonded fibers", refers to small diameter fibers that are formed by extruding a molten thermoplastic material as filaments from a plurality of fine, usually circular, capillaries of a spinneret with the diameter of the extruded filaments then being rapidly reduced as by, for example, eductive drawing or other well-known spunbonding mechanisms.

The term "finished absorbent article" is used herein to generally mean any absorbent article having incorporated all layers of material and other features that the article is intended to have that affect the product's performance characteristics. This term includes, but is not

limited to, products ell known in the art as diapers, sanitary napkins, and adult incontinent briefs.

The term "insult" is used herein to refer to the act of applying a finite amount of liquid to the topsheet of a finished absorbent article. An insult may occur during product use and during finished product testing. Consequently, "multiple insults" occur when the same finished absorbent article is insulted more than once. Multiple insults may occur during product use and during finished product testing.

As used herein, "unconsolidated" means the fibers have some freedom of movement and are not fixed in position with respect to the other fibers in the web. In other words, the fibers generally are not compacted together or fused to the extent that an aperture cannot close, rather, the aperture may be blocked by some fiber strands that extend across, and partially obstruct it.

As used herein, "consolidated" means the fibers are generally compacted, fused, or bonded, so as to restrict movement of the fibers individually. Consolidated fibers will generally not extend out into an aperture and will likely be more dense than unconsolidated fibers.

As used herein "mesh count" means the number of holes per square centimeter. Therefore a material with a higher mesh would have more holes while a lower mesh would have fewer holes.

As used herein, the term "point bonding" means bonding one or more fabrics at a plurality of discrete points. For example, thermal point bonding generally involves passing one or more layers to be bonded between heated rolls, for example, an engraved pattern roll and a smooth calender roll. The engraved roll is patterned in some way so that the entire fabric is not bonded over its entire surface, and the calender roll is usually smooth. As a result, various patterns for engraved rolls have been developed for functional as well as aesthetic reasons.

As used herein, "gsm" is an abbreviation for grams per square meter.

Absorbent Article Embodiments

Referring to FIG. 1, FIG. 2, FIG. 3, and FIG. 5, absorbent article 10 has a body facing side 12. In use, the absorbent article 10 is typically placed so that body facing side 12 faces the user's body and the opposite side of the absorbent article is either exposed, as in a bandage, or faces the user's clothing, as in a diaper or feminine hygiene product. Topsheet 13 is positioned on the body facing side 12 of the absorbent article and comprises a fluid pervious material to allow fluids to enter the absorbent article 10. Both nonwovens and

apertured films are typical materials used for topsheet 13. Backsheet 14 is opposite body facing side 12 and will typically be a fluid resistant or fluid impervious layer to prevent fluids from escaping the absorbent article 10. Absorbent core 16 will be between backsheet 14 and body facing side 12 to absorb fluids. Intermediate layer 20 will be between absorbent core 16 and body facing side 12. Intermediate layer 20 is designed to promote fluid flow from topsheet 13 to absorbent core 16 while also preventing fluid flow from absorbent core to topsheet 13, as discussed in the background and in the testing section below.

In FIG. 1 and FIG. 2 the intermediate layer 20 has a resilient three dimensional formed film 22 with a male side 24 and a female side 26. Small scale apertures 28 in the formed film 22 have a mesh count of between about $20/cm^2$ and $200/cm^2$. More preferably the mesh count of the small scale apertures is between about $50/cm^2$ and $100/cm^2$. Most preferably the mesh count of the small scale apertures is about $90/cm^2$. Formed film 22 is preferably made of a thermoplastic material to aid in forming. More preferably, formed film 22 is made of polypropylene, polyethylene, or some other polyolefin.

The resilient three-dimensional shape of the formed film 22 creates a void volume on both the male side and the female side of the formed film 22. It is advantageous in this invention to maintain that void volume and not allow the absorbent core 16 or the fibers from the nonwoven web 30 to fill the void volume. The void volume allows for efficient fluid transfer both above and below the formed film 22. Therefore a light tissue may be placed between the absorbent core and the intermediate layer 20 to help in maintaining void volume of the intermediate layer.

A nonwoven web 30 is attached to the formed film 22, between the formed film 22 and topsheet 13. Nonwoven web 30 is preferably comprised of fibers of polymeric material, although other fibers may be used. In particular, polypropylene and polyethylene, either alone or in bi-component and other blends, are effective.

A plurality of large scale apertures 32 extend through nonwoven web 30 and formed film 22. The large scale apertures 32 have a mesh that is less than the mesh of the small scale apertures 28. The mesh count of large scale apertures 32 will preferably be between $2/cm^2$ and $50/cm^2$, more preferably between $3/cm^2$ and $30/cm^2$, and most preferably between $6/cm^2$ and $11/cm^2$. Therefore, the small scale apertures 28 will be more numerous in a given area than the large scale apertures 32. An important aspect of the large scale apertures 32 is to provide a three-dimensional aspect to the intermediate layer 20.

In the preferred embodiments shown in FIG. 1 and FIG. 2, the large scale apertures are generally conical, having a larger opening 34 and a smaller opening 36. In particular, the

larger opening 34 is between the body facing side 12 and the smaller opening 36. In a more preferred embodiment there are substantially unconsolidated fibers 38 near the larger opening and substantially consolidated fiber 40 near the smaller opening.

In the preferred embodiments shown in FIGS. 1 and 2, it is possible for the substantially consolidated fibers 40 and the formed film 22 to be fused to create a point bond between the nonwoven web 30 and the formed film 22 at a plurality of the large scale apertures 32.

In the preferred embodiment shown in FIG. 1, the male side 24 of the formed film 22 is facing the nonwoven web 30. In contrast, FIG. 2 shows an embodiment where the female side 26 of the formed film 22 is facing the nonwoven web 30.

In a preferred embodiment, the side of formed film 22 that is facing the nonwoven web 30, the male side 24 in FIG. 1 or the female side in FIG. 2, is treated with a surfactant, and therefore is more hydrophilic. Typical surfactants would include non-ionic and silicone based surfactants, although others may be used.

As shown in FIG. 3, the intermediate layer 20 may include a stiffer nonwoven layer 42 in the place of formed film 22. The stiffer nonwoven layer 42 has a relatively rough texture, as compared to nonwoven web 30, and is formed of fibers with an average diameter larger than the fibers of nonwoven web 30. The stiffer nonwoven layer 42 is formed of materials similar to those used in nonwoven layer 30. The stiffer nonwoven layer 42 may be a separate nonwoven web joined with nonwoven web 30 in a manner similar to formed film 22, or it may be a layer of fibers formed with nonwoven web 30. The discussion above regarding the formation of large scale apertures 32 applies to the intermediate layer 20 of FIG. 3, with the stiffer nonwoven layer 42 replacing the formed film 22.

FIG. 1, FIG. 2, and FIG. 3 show composite versions of intermediate layer 20. Each has a nonwoven web of fibers 30 and a stiffening means in the form of apertured film 22 or nonwoven layer 42. Other stiffening means may be selected from non-apertured films, less stiff nonwoven layers, woven layers, adhesive coatings, surfactant coatings, and other materials added to the nonwoven layer 30. In FIG. 5, intermediate layer 20 is comprised of nonwoven web 30 with large scale apertures 32, but without a stiffening means.

Method for Making Intermediate Layers

A formed film 22 is manufactured to have a resilient three dimensional structure. The film is preferably manufactured by a vacuum forming process, wherein a molten layer of thermoplastic material is fed from a melt die onto a shaped screen utilizing vacuum pressure

to form the thermoplastic material to the shape of the screen. Other methods for manufacturing resilient three dimensional formed films may include reheat processes.

A nonwoven web 30 is manufactured from polymeric fibers. In a preferred embodiment the nonwoven web is airthrough bonded, carded thermobonded, spunbonded, or spunbond meltblown spunbond. In a preferred embodiment the fibers are single component or bi-component. In a preferred embodiment the material is polypropylene or polyethylene, although polyester may be added.

The formed film 22 and nonwoven web 30 are joined prior to forming of the large scale apertures 32. In a preferred embodiment the formed film 22 and the nonwoven web 30 are aligned adjacent each other. In another preferred embodiment the formed film 22 is adhesively secured to the nonwoven web 30 prior to the forming of large scale apertures 32. The importance of joining the nonwoven web 30 with the formed film 22 is so that large scale apertures 32 penetrate both the nonwoven web 30 and the formed film 22.

FIG. 4 shows a preferred mechanism for forming large scale apertures 32. A pin roll 50 and counter roll 52 rotate in opposite directions to form a nip through which the nonwoven web 30 and formed film 22 are fed. Pins 54 protrude from the surface of pin roll 50. Holes 56 are recessed into counter roll 52. Pin roll 50 and counter roll 52 are aligned so that pins 54 mate with holes 56.

In a more preferred embodiment, pin roll 50 and counter roll 52 are manufactured of rigid material and are mounted on an adjustable chassis to allow modification of the distance between the rolls. In particular, pin roll 50 is preferably manufactured of metallic material and pins 54 are preferably manufactured of a metallic material. Pins 54 preferably have a pointed end and taper from about half of their length to the pointed end. In a preferred embodiment pins 54 are heated, as discussed in more detail below.

The holes 56 are preferably larger than pins 54 and are shaped. In a preferred embodiment the shape of holes 56 is partially replicated by the large scale apertures 32. In a preferred embodiment the holes 54 are generally conical so that when the pins 54 push material into holes 56 the material near the tips of pins 54 is compressed further than any other material, and experiences more heat transfer if the pins 54 are heated. This preferred combination of narrow heated pins 54 and generally conical holes 56 produces a preferred large scale aperture 32 having generally consolidated fibers 40 near a smaller opening 36 and generally unconsolidated fibers 38 near a larger opening 34.

In a less preferred embodiment counter roll 52 may be manufactured of a pliable material, thereby making holes 56 unnecessary. In such an embodiment pins 54 would simply protrude into the pliable material of counter roll 52.

The pins 54 may be heated for several reasons. One reason to heat pins 54 is to properly form large scale apertures 32. The heated pins 54 may also be heated to a temperature sufficient to bond the nonwoven web 30 to the formed film 22. Furthermore, the heated pins 54 may help in creating substantially consolidated fibers 40 near the smaller openings 36. The pins may also be heated to provide for structural resilience in large scale apertures 32 in order to maintain void volume between the intermediate layer 20 and the absorbent core 16. In particular, the heated pins may cause the formed film 22 or the stiffer nonwoven layer 42 to become more rigid and support the large scale apertures 32 during further processing, storage, or use. This allows the use of a softer nonwoven web 30 without compromising the shape of the large scale apertures 32 or the void volume they create between the intermediate layer 20 and the absorbent core 16.

In a first preferred embodiment the pins 54 are heated to a temperature sufficient to fuse the consolidated fibers 40 and the formed film 22 near the smaller openings 36, thus securing the nonwoven web 30 to the formed film 22. Even at this temperature, the shape of the pins 54 and the holes 56 is such that unconsolidated fibers 38 still exist near the large openings 34.

In another preferred embodiment, the nonwoven web 30 is comprised of materials with more than one melting point, such that a plurality of fibers have a melting point near the melting point of the material of formed film 22, and lower than other fibers in the nonwoven web 30.

The pins 54 are heated to a temperature to melt the lower melting point fibers and the formed film 22 near the smaller openings 36, thus forming consolidated fibers 40 and securing the nonwoven web 30 to the formed film 22.

In yet another embodiment the fibers of the nonwoven web 30 have a melting point that is higher than the melting point of the material of the formed film 22. The pins 54 are heated to a temperature sufficient to melt the formed film 22 and bond the consolidated fibers 40 near the smaller opening 36, thereby securing the nonwoven web 30 to the formed film 22.

In yet another embodiment the nonwoven web 30 is secured to the formed film 22 prior to forming the large scale apertures. Preferably the securing would be an adhesive bonding. In this embodiment the pins 54 are heated to a temperature sufficient to shape the

nonwoven web 30 in the vicinity of the large scale apertures and form consolidated fibers 40 near the smaller opening 36, but not necessarily enough to fuse the consolidated fibers 40 to the formed film 22, or the formed film 22 to the nonwoven web 30.

In yet another preferred embodiment the formed film any of the above examples is replaced with a stiffer nonwoven layer 42 with similar material characteristics.

In yet another preferred embodiment the nonwoven web 30 is run through the pins discussed above without a stiffening means 22, 42.

Finished Article Testing

The performance of several preferred embodiments of intermediate layer 20 was evaluated in use on a Proctor & Gamble Petalo blu Core with an HFF topsheet. The preferred embodiments were compared against the performance of a Procter & Gamble acquisition distribution layer (ADL 70 gsm).

The three embodiments tested were Type 14, Type 15, and Type 16, described below:

Type 14 is a spunbond/meltblown/spunbond 15 gsm nonwoven combined with an air-through bonded 25 gsm nonwoven.

Type 15 is a carded thermal-bonded philic 18 gsm nonwoven combined with a Tredegar three-dimensional apertured formed film with the male side facing the topsheet.

Type 16 is a single layer of carded airthrough bonded philic 18 gsm nonwoven.

The following table summarizes the results of the tests for strikethrough, wetback, and partition coefficient. Both the strikethrough and the wetback are measured in accordance with the test method described below. Comparatively speaking, higher performance in both tests is achieved by a lower numerical result. In other words, the lower the amount of time required to absorb the fluid, the better the strikethrough performance, and the lower the amount of fluid that is collected at wetback, the better the wetback performance. Partition coefficient core is a measure of the percent of fluid retained in the absorbent core of the absorbent article after strikethrough and rewet testing as described in test method described below. A higher partition coefficient core is preferred as it indicates that the fluid is not being retained in the topsheet and ADL layers or being released as wetback.

Intermediate Layer	Strikethrough (s)	Wetback (g)	Partition Coefficient Core (%)
P&G	3.01	0.4	74
Type 14	2.12	1.69	92
Type 15	1.98	0.47	88
Type 16	1.69	0.41	86

As can be seen, all of the materials tested had better strikethrough performance than the P&G ADL. Type 15 and type 16 had better wetback performance than the P&G ADL, as well.

All of the tested materials had better partition coefficient core measures than the P&G ADL.

Strikethrough, Wetback and Partition Coefficient Test Method

The test method below is used to determine the acquisition time (strikethrough), the rewet performance (wetback) and fluid distribution (partition coefficient) of constructed feminine hygiene products.

In general terms, a feminine hygiene product is dismantled and weighed in each layer (topsheet, acquisition distribution layer (ADL) and absorbent core). The feminine hygiene product is reconstructed and insulted with 10 ml of saline solution. The strikethrough time is measured and recorded. After 20 minutes, 10 pre-weighted pick up papers are placed onto the insulted region and 0.58 psi of pressure is applied for 2 minutes. The pick-up papers are weighed again and the amount of rewet is calculated and reported in grams. The feminine hygiene product is dismantled again and the parts are weighed again to calculate the partition coefficient of each layer (% of liquid retained in each layer). Note that this test method is based on the following EDANA Recommended Test Methods: ERT 150.5-02 "Liquid Strike-Through Time" and ERT 151.3-02 "Wetback".

The following equipment is used in this test method:

- 50 ml capacity Burette with a supporting stand.
- Strikethrough apparatus according to EDANA ERT 150.5-02 (including a funnel with magnetic valve, ring stand to support the funnel, strikethrough plate with electrodes, base plate, and electronic timer) sold under the name Lister by Lenzing Technik of Austria.
- Pickup paper (ERT FF3--STRIKETHROUGH/WETBACK) supplied by Hollingworth & Vose Company Ltd. (UK).
- Analytical balances (Accuracy of 0.001 g).
- Weight of 4 Kg with a 100 mm X 100 mm surface to provide 0.58 psi load.
- Simulated menstrual fluid having a viscosity of 13 cps (centipoises) +/- 1 cps as measured at 25 degree C and containing the following ingredients listed as percentage by weight:
  - 90.37% Water (H_2O)

- 7.50% Glycerin
- 1.13% Sodium Carboxymethyl Cellulose (CMC)
- 0.50% Sodium Chloride (NaCl)
- 0.40% Sodium Hydrogen Carbonate ($NaHCO_3$)
- 0.10% Ca24--a commercially available anti-bacterial agent, sourced from Maycos Italia.

It is recommended that the test be conducted in a standard laboratory environment with a temperature of 20 degree C +/- 2 degree C and relative humidity of 50% +/- 5%. The specimen and pick-up paper should be conditioned for 24 hours prior testing at 23 degree C +/- 2 degree C and relative humidity of 50% +/- 5%.

To begin testing, the feminine hygiene product is deconstructed. The topsheet, ADL and core (including the backsheet and other non-absorbent parts) are carefully detached from each other. The feminine hygiene product may be frozen to assist in separating the layers when hot melt adhesive was used in the original construction of the product. The test specimen should be clean and free of edge tear, wrinkles and blemishes, which can contribute to false results. After separation, weigh the topsheet and the ADL and record the weights as T_o and ADL_o, respectively. Additionally, weigh the remaining part of the feminine hygiene product, including the core and backsheet and record the weight as $Core_o$. The feminine hygiene product is then carefully reconstructed to form an intact product.

Set up the ring stand holding the funnel and position the burette with the tip inside the funnel. Place the strikethrough plate on the feminine hygiene product with the product's acquisition side up and the center of the plate over the center of the product's insult point, near the middle of the product. Check that the electrodes in the strikethrough plate are clean. Adjust the height of the funnel to the top of the cavity in the plate. Ensure that the electrodes are connected to the timer. Activate the timer and set the time to zero. Fill the burette with the simulated menstrual fluid. Keep the discharge valve of the funnel closed and run 10 ml of simulated menstrual fluid from the burette to the funnel. Open the magnetic discharge valve of the funnel to discharge the 10 ml of simulated menstrual fluid. Record the strikethrough time as displayed by the timer. Gently remove the feminine hygiene product from the strikethrough apparatus and leave it in a horizontal position for 20 minutes to ensure even diffusion of the liquid.

Weigh 10 layers of dry pick-up paper, record the mass and place them over the insult point of the feminine hygiene product. Carefully apply the 4 kg weight onto the pick-up paper over the insulted point of the feminine hygiene product and leave it in place for 2

minutes. Remove the weight and reweigh the pick-up papers. Detach each layer (topsheet, ADL, and core, as above) and weigh them to record T_{Fin}, ADL_{Fin} and $Core_{Fin}$, respectively. Repeat the test on at least two more feminine hygiene products.

For each feminine hygiene product, calculate the Rewet using the following formula:
Rewet (g)=[Wet Weight of pickup paper (g)-Dry Weight of pickup paper (g)]

Evaluate the Partition Coefficient of each layer using the following formula:

Partition Coefficient Topsheet (%) = $((T_{Fin} - T_o)/(Liquid_{Discharged})) \times 100$

Partition Coefficient ADL (%) = $((ADL_{Fin} - ADL_o)/(Liquid_{Discharged})) \times 100$

Partition Coefficient Core (%) = $((Core_{Fin} - Core_o)/(Liquid_{Discharged})) \times 100$

Where : $Liquid_{Discharged} = Rewet + (T_{Fin} - T_o) + (ADL_{Fin} - ADL_o) + (Core_{Fin} - Core_o)$

CONCLUSION

A number of embodiments of the invention have been described. Nevertheless, it will be understood that various modifications may be made without departing from the spirit and scope of the invention. For example, additional layers may be added to the absorbent article. Accordingly, other embodiments are within the scope of the following claims.

* * * * *

CLAIMS

What is claimed is:

1. An absorbent article with a body facing side, the absorbent article comprising: a topsheet on the body facing side; a backsheet opposite the body facing side; an absorbent core between the backsheet and the body facing side; and a composite intermediate layer between the absorbent core and the topsheet, said composite intermediate layer comprising: a resilient three dimensional apertured formed film between the absorbent core and the topsheet, said formed film having a male side and a female side opposite the male side, and small scale apertures having a mesh count; a nonwoven web of fibers between the formed film and the body facing side of the absorbent article; and a plurality of large scale apertures extending through the nonwoven web and the formed film, said large scale apertures having a mesh count which is less than the mesh count of the small scale apertures.

2. The absorbent article of claim 1 wherein the male side of the formed film faces the nonwoven web.

3. The absorbent article of claim 1 wherein the female side of the formed film face the nonwoven web.

4. The absorbent article of claim 1 wherein said large scale apertures are generally conical in shape, tapering from a larger opening to a smaller opening, the larger opening being between the smaller opening and the topsheet.

5. The absorbent article of claim 4 wherein said large scale apertures have generally unconsolidated fibers near the larger opening and generally consolidated fibers near the smaller opening.

6. The absorbent article of claim 4 wherein fibers of said nonwoven web are bonded at said smaller opening by melted portions of said formed film.

7. The absorbent article of claim 1 wherein the mesh count of the small scale apertures is between about $20/cm^2$ and about $200/cm^2$.

8. The absorbent article of claim 1 wherein the mesh count of the small scale apertures is between about $50/cm^2$ and about $100/cm^2$.

9. The absorbent article of claim 1 wherein the mesh count of the small scale apertures is about $90/cm^2$.

10. The absorbent article of claim 1 wherein the mesh count of the large scale apertures is between about $2/cm^2$ and about 50/cm.

11. The absorbent article of claim 1 wherein the mesh count of the large scale apertures is between about $3/cm^2$ and about $30/cm^2$.

12. The absorbent article of claim 1 wherein the mesh count of the large scale apertures is between about $6/cm^2$ and about $11/cm^2$.

13. The absorbent article of claim 1 wherein the mesh count of the small scale apertures is between about 5 and about 25 times the mesh count of the large scale apertures.

14. The absorbent article of claim 1 wherein the mesh count of the small scale apertures is between about 10 and about 20 times the mesh count of the large scale apertures.

15. The absorbent article of claim 1 wherein the mesh count of the small scale apertures is about 15 times the mesh count of the large scale apertures.

16. The absorbent article of claim 1 wherein the nonwoven web is selected from the group consisting of an airthrough bonded nonwoven, a carded thermobonded nonwoven, and a spunbond meltblown spunbond nonwoven.

17. The absorbent article of claim 1 wherein the nonwoven web is selected from the group consisting of polypropylene fibers, polyethylene fibers, and a combination of polypropylene and polyethylene fibers.

18. The absorbent article of claim 1 wherein the nonwoven web is comprised of polyester fibers.

19. The absorbent article of claim 1 wherein the formed film is comprised of low density polyethylene.

20. The absorbent article of claim 1 wherein the body facing side of the formed film is coated with a surfactant.

21. A method of making a composite intermediate layer comprising the steps of: forming a resilient three dimensional apertured formed film having a male side and a female side, said formed film being formed with small scale apertures having a mesh count; forming a nonwoven web of fibers; joining the nonwoven web with the apertured formed film; and aperturing the joined nonwoven web and formed film to create large scale apertures in the joined nonwoven web and formed film, a plurality of said large scale apertures created at a mesh count that is less than the mesh count of the small scale apertures.

22. The method of claim 21 wherein the forming of the resilient three dimensional apertured formed film is performed by vacuum forming of the film.

23. The method of claim 21 wherein the forming of the nonwoven web of fibers is formed by one of airthrough bonding, carded thermobonding, or spunbond meltblown spunbonding. 24. The method of claim 21 wherein the joining of the nonwoven web to the formed film includes the addition of an adhesive between the nonwoven web and the formed film.

25. The method of claim 21 wherein the aperturing of the joined nonwoven web and formed film secures the nonwoven web to the formed film.

26. The method of claim 25 wherein the nonwoven web is secured to the formed film by the fusing of the fibers of the nonwoven web to portions of the formed film at the large scale apertures.

27. The method of claim 25 wherein the nonwoven web is secured to the formed film by the melting of the formed film near the large scale apertures.

28. The method of claim 25 wherein the nonwoven web is secured to the formed film by the melting of a plurality of the fibers in the nonwoven web near the large scale apertures.

29. The method of claim 21 wherein a large scale aperture is formed by a heated needle mating into a shaped recess such that the apertures are resilient three dimensional.

30. The method of claim 29 wherein the large scale aperture is shaped by a contacting surface of the needle and the shaped recess such that the fibers of the nonwoven web are selectively fused only in the vicinity of the contacting surface.

31. An absorbent article with a body facing side, the absorbent article comprising: a topsheet on the body facing side; a backsheet opposite the body facing side; an absorbent core between the backsheet and the topsheet; and a composite intermediate layer between the absorbent core and the topsheet, said composite intermediate layer comprising: a stiffening means between the absorbent core and the topsheet, said stiffening means having openings with a hydraulic radius; a nonwoven web of fibers between the stiffening means and the topsheet, said nonwoven web of fibers having an average radius of the fibers; and a plurality of large scale apertures extending through the nonwoven web and the stiffening, said large scale apertures having a hydraulic radius that is substantially greater than the hydraulic radius of the openings of the stiffening means.

32. The absorbent article of claim 31 wherein the stiffening means is a resilient three dimensional apertured formed film between the absorbent core and the body facing side, said formed film having a male side and a female side opposite the male side.

33. The absorbent article of claim 31 wherein the stiffening means is a stiffer nonwoven layer 2 of fibers having a larger average radius of fibers.

34. An absorbent article with a body facing side, the absorbent article comprising: a topsheet on the body facing side; a backsheet opposite the body facing side; an absorbent core between the backsheet and the topsheet; and a three dimensional nonwoven layer between the absorbent core and the topsheet, said three dimensional nonwoven layer having large scale apertures extending from the proximity of the topsheet to the proximity of the absorbent core, the large scale apertures having a conical shape such that only the smaller opening of the large scale apertures are adjacent the absorbent core.

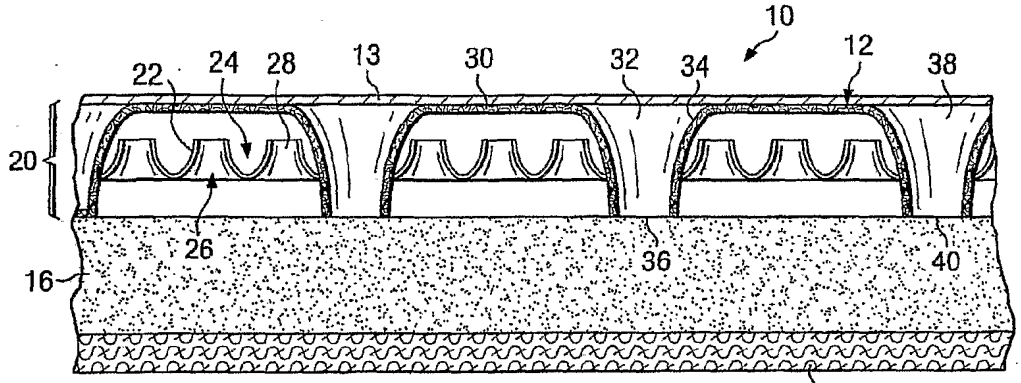

FIG. 1

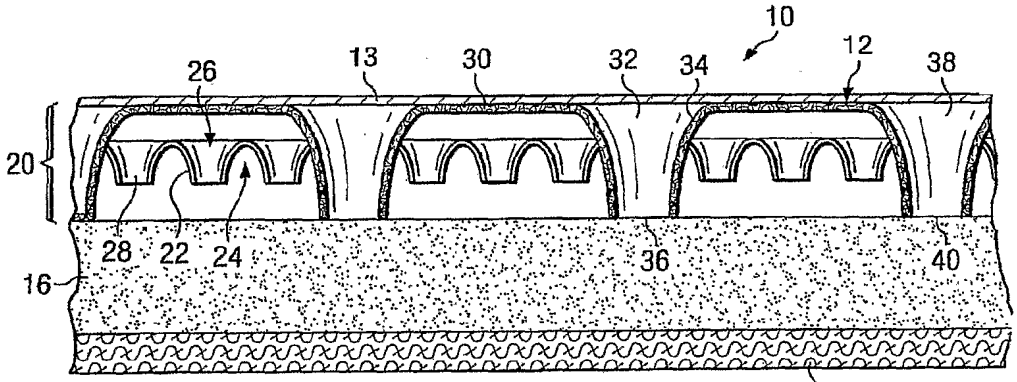

FIG. 2

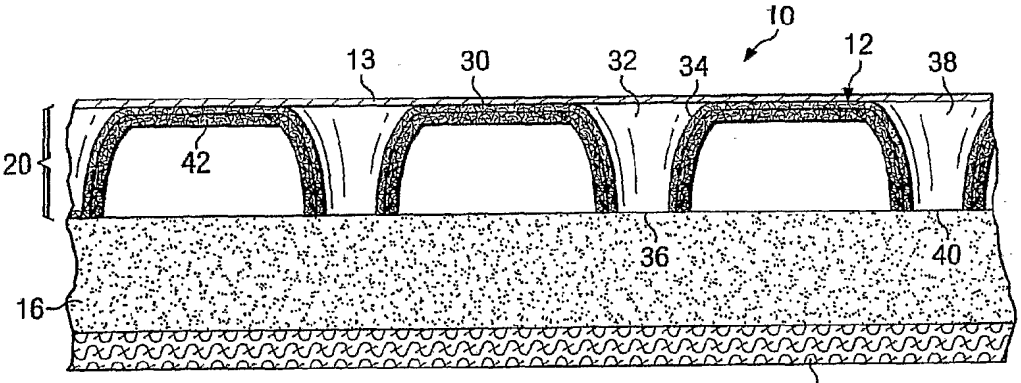

FIG. 3

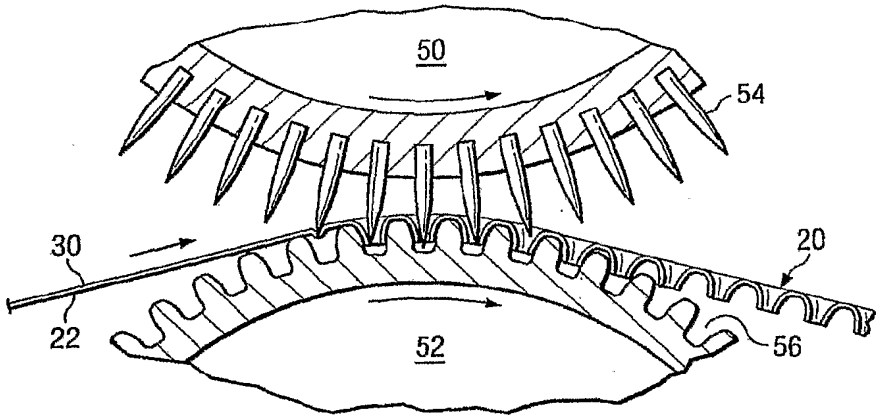

FIG. 4

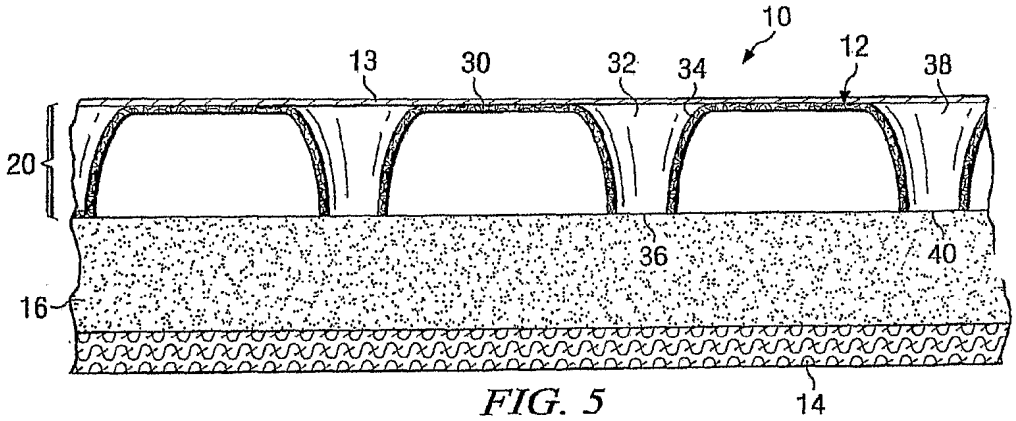

FIG. 5

(12) INTERNATIONAL APPLICATION PUBLISHED UNDER THE PATENT COOPERATION TREATY (PCT)

(19) World Intellectual Property Organization
International Bureau

(43) International Publication Date
15 September 2005 (15.09.2005)

PCT

(10) International Publication Number
WO 2005/084596 A1

(51) International Patent Classification[7]: A61F 13/15, D21H 11/02, D21F 11/14

(21) International Application Number: PCT/SE2004/000307

(22) International Filing Date: 4 March 2004 (04.03.2004)

(25) Filing Language: English

(26) Publication Language: English

(71) Applicant *(for all designated States except US)*: **SCA HYGIENE PRODUCTS AB** [SE/SE]; GÖTEBORG, 405 03 (SE).

(72) Inventors; and
(75) Inventors/Applicants *(for US only)*: **FALK, Magnus** [SE/SE]; Krokstrandsvägen 20, ONSALA, 439 94 (SE). **MÅNSSON, Anna** [SE/SE]; Pinnharvsgatan 4D, MÖLNDAL, 431 47 (SE). **ALBERTSSON, Sverker** [SE/SE]; Radavägen 13B, PIXBO, 435 43 (SE).

(74) Agents: **ALBIHNS STOCKHOLM AB** et al.; Box 5581, S-114 85 Stockholm (SE).

(81) Designated States *(unless otherwise indicated, for every kind of national protection available)*: AE, AG, AL, AM, AT, AU, AZ, BA, BB, BG, BR, BW, BY, BZ, CA, CH, CN, CO, CR, CU, CZ, DE, DK, DM, DZ, EC, EE, EG, ES, FI, GB, GD, GE, GH, GM, HR, HU, ID, IL, IN, IS, JP, KE, KG, KP, KR, KZ, LC, LK, LR, LS, LT, LU, LV, MA, MD, MG, MK, MN, MW, MX, MZ, NA, NI, NO, NZ, OM, PG, PH, PL, PT, RO, RU, SC, SD, SE, SG, SK, SL, SY, TJ, TM, TN, TR, TT, TZ, UA, UG, US, UZ, VC, VN, YU, ZA, ZM, ZW.

(84) Designated States *(unless otherwise indicated, for every kind of regional protection available)*: ARIPO (BW, GH, GM, KE, LS, MW, MZ, SD, SL, SZ, TZ, UG, ZM, ZW), Eurasian (AM, AZ, BY, KG, KZ, MD, RU, TJ, TM), European (AT, BE, BG, CH, CY, CZ, DE, DK, EE, ES, FI, FR, GB, GR, HU, IE, IT, LU, MC, NL, PL, PT, RO, SE, SI, SK, TR), OAPI (BF, BJ, CF, CG, CI, CM, GA, GN, GQ, GW, ML, MR, NE, SN, TD, TG).

Published:
— *with international search report*

For two-letter codes and other abbreviations, refer to the "Guidance Notes on Codes and Abbreviations" appearing at the beginning of each regular issue of the PCT Gazette.

(54) Title: ABSORBENT TISSUE PRODUCT AND METHOD FOR ITS MANUFACTURE

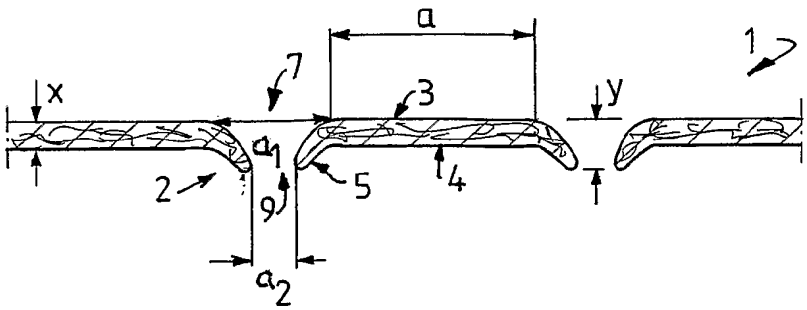

(57) Abstract: An absorbent tissue product of lignocellulose containing material provided with openings, and an absorbent tissue product made thereof. The tissue sheet comprises a plurality of wet stable cavities (2) with openings towards both sides if the sheet,. Each cavity (2) has a larger opening (7), and a smaller opening (9). Method for manufacturing of an absorbent structure from lignocellulose containing material with wet stable cavities and intermediate regions in which a wet paper web is formed on a forming fabric and is transferred to a patterning fabric (82). The wet paper web is shaped and provided with openings against the patterning fabric by suction or blowing of air through the wet paper web and the patterning fabric, and thereafter dried on the patterning fabric.

WO 2005/084596 A1

Absorbent tissue product and method for its manufacture

Technical field

The present invention relates to an absorbent tissue product, a method for manufacturing of a tissue sheet and method for manufacturing of a tissue product .

Background

Absorbent tissue products should have high strength, high bulk, high absorbency, and be soft. High absorption is achieved through i.e. high bulk. Paper products having spaces between the fibres contain more room for absorption of liquids in spaces. The product should also present wet stability.

Perforated or embossed tissue sheets that are provided with openings or cavities are presently used for the manufacture of certain types of household tissue paper or industrial tissue paper. The openings or cavities in the tissue sheet capture dirt and enhances the absorbency of the tissue paper. The perforation may be conducted during the converting, by leading a dry paper web between a roll, provided with protruding spikes and a rubber roll or by forcing long needles through the paper web or by removing small areas of the paper web by punching. In all these cases the fibres break, hydrogen bonds are broken and the structures of both the fibres and the paper are destroyed. A paper web thus perforated, loses strength and does not show wet stability, i.e. it does not retain its shape while wet.

Summary of the invention

The present invention relates to an absorbent tissue product containing lignocellulose material, comprising at least one tissue sheet provided with openings, which is provided with a plurality of cavities, having the shape of a funnel or a crater. The cavities extend

from one side of the sheet, through the sheet and out on the other side of the sheet as a protrusion, by means of the tissue sheet bending outwards from one side, towards the other side of the sheet, in the area of the cavity. The protrusions comprise an opening at their top and the product also shows wet stability.

The present invention further relates to the manufacturing of a wet stable tissue sheet of lignocellulose containing material being provided with openings, wherein a wet paper web is formed, shaped and provided with openings against a patterning paper machine fabric, which is provided with indentations that preferably are funnel shaped. The openings are accomplished by sucking and/or blowing air through the wet paper web and the patterned fabric, by means of vacuum and/or overpressure, whereby openings appear in the paper web in the areas that are formed against the indentations.

The present invention further relates to a method for the manufacture of a tissue product of lignocellulose containing material, wherein at least one tissue sheet is provided with openings according to the above method and is subsequently brought together with one or more additional tissue sheets.

The present invention provides a tissue product, which has excellent absorbency. Since the tissue product contains at least one tissue sheet provided with openings, which sheet comprises funnel shaped cavities, which extend outwards on the other side of the sheet as protrusions, an excellent absorbency is achieved. The funnel shaped cavity and its protrusion has an excellent ability to absorb liquids through its capillary forces, whereby the liquid is absorbed from the base of the funnel shaped cavity, which base is in the plane of the tissue sheet. Thanks to the tapering funnel shape of the cavity, liquid is more easily led in one direction, i.e. from the base opening towards the top opening.

The method for manufacturing of a tissue sheet according to the present invention provides for a strong tissue sheet, wherein no hydrogen bonds or fibres are broken during forming of the openings. Moreover, the tissue sheet is wet stable.

The present invention will now be described in further detail, by means of the drawings.

Brief description of the drawings

Figure 1 shows a schematic representation of a tissue sheet provided with cavities with openings towards both sides of the sheet. This is a cross sectional view of Fig. 10, along line I-I,

Figure 2 shows a schematic cross sectional representation of one embodiment of the tissue product, comprising two tissue sheets, both being provided with cavities with openings towards both sides of the sheet,

Figures 3 and 4 show cross sectional representations of further embodiments of the tissue product, comprising two tissue sheets, both being provided with cavities with openings towards both sides of the sheet,

Figure 5 shows a cross sectional representation of an embodiments of the tissue product, which comprises two tissue sheets, one of which is provided with cavities with openings towards both sides of the sheet and the other being substantially flat,

Figure 6 shows a schematic cross sectional representation of another embodiment of the tissue product, comprising two tissue sheets, one of which is provided with cavities with openings towards both sides of the sheet and the other being substantially flat,

Figure 7 shows a schematic cross sectional representation of another embodiment of the tissue product, comprising two tissue sheets being provided with cavities with openings towards both sides of the sheet and one substantially flat sheet without cavities,

Figure 8 shows a schematic cross sectional representation of one embodiment of a patterning forming fabric, which may be used when manufacturing a tissue sheet provided with cavities with openings, according to the invention,

Figure 9 shows a schematic cross sectional representation of another embodiment of a patterning forming fabric, which may be used when manufacturing a tissue sheet provided with cavities with openings according to the invention,

Figure 10 shows a schematic top view of a tissue sheet, according to the invention

Figure 11 shows a TAD-fabric as seen from above, according to the invention.

Detailed description of the present invention

The present invention relates to an absorbent tissue product, made of lignocellulose containing material, which product comprises at least one tissue sheet 1, which is provided with a plurality of cavities with openings towards both sides of the sheet and with intermediate regions. The tissue sheet has a local thickness x, which is the thickness of the base sheet in the intermediate regions. The cavities 2 have a depth y which is the distance between the two openings 7, 9. The depth y is indicated in Fig. 1.

A tissue sheet 1 as indicated above is shown in Fig. 1, which shows a cross sectional view along the line I-I in Fig. 10. The depth y of a cavity 2 preferably exceeds the local thickness x of the tissue sheet. The depth y is preferably 1.1, more preferably 1.5 and most preferably 2 times the local thickness x. The tissue sheet suitably has a local thickness of 20-400 μm, preferably 20-200 μm, and more preferably 30-150 μm. The cavities may be tapered. The larger openings 7 have an area a_1 and the smaller openings 9 have an area a_2, where a_1 is more than approximately 1, preferably more than 1,5 and more preferably more than 2 times a_2. The area a_1 of the larger opening 7 is 0,01-50 mm^2, preferably 0,05-28 mm^2, and more preferably 0,2-20 mm^2, whereas the smaller opening 9 has an area a_2 of 0,01- 50 mm^2, preferably 0,05-20 mm^2 and more preferably 0,2-13 mm^2.

The size of the cavities, as well as the size of their openings, may vary depending on the intended use of the product. In a tissue product intended for wiping liquids of high viscosity, such as oil, the area of the larger opening 7 should be 0,8-50 mm^2, preferably 2-28 mm^2 and more preferably 3-20 mm^2 and the area of the smaller opening 9 should be 0,8-50 mm^2, preferably 2-20 mm^2 and more preferably 3-13 mm^2.
Less viscous liquids, such as water, are more easily absorbed when the area of the larger opening 7 is 0,1-28 mm^2, preferably 0,05-13 mm^2 and more preferably 0,2-7 mm^2, and the area of the smaller opening 9 is 0,01- 13 mm^2, preferably 0,05-7 mm^2 and more preferably 0,2-3 mm^2. The size of the cavity and its openings can additionally be adapted such that the cavities 2 can accommodate impurity particles, as they enter the larger opening 7. In such applications the tissue sheet is oriented in the tissue product such that the side 3 of the tissue sheet with larger openings, will be turned towards the surface to be wiped. The wiping and liquid absorbing capacity for a multi-ply product is at its best when the sheets are oriented in the product such that the larger openings 7 of the cavities 2 are directed towards the surface to be wiped.

The shape of the cavities may be designed in different ways. The openings may be either symmetrical or unsymmetrical, and may also be circular, oval or cornered. When the opening area is small, typically less than 4 mm^2 it more depends on the orientation of the fibres around the opening, and is typically substantially circular. The cavity may have the shape as a frustum of a cone or a crater, and may also be softly tapered in a hyperbolic shape or it may have a cornered shape. The cavity may also be designed so as to include a funnel part that tapers from the larger opening, followed by a cylindrical part towards the end of the smaller opening.

In order to achieve an excellent absorbency, there should be 0,5-40 cavities with openings towards both sides 2 per cm^2 in the tissue sheet, preferably 1-20 per cm^2, and more preferably 2-10 per cm^2. The cavities 2 are distributed over the surface of the tissue sheet, preferably in a regular pattern, although an irregular pattern would also do. Figure 10 shows a tissue sheet 1 with cavities 2, having circular openings, distributed evenly

over the surface area in a regular pattern. Openings having other shapes and other regular or irregular patterns may of course also be used. There may also be cavities that not have openings towards both sides of the sheet. This can be a deliberate result of the manufacturing process, or may be an unintentional result of variations in the manufacturing process, which lead to the creation of some cavities or openings not being successful.

If desired, the tissue sheet may also comprise some areas without any pattern of cavities and openings.

The absorbency of the tissue product is influenced by the capillary action of the cavities, as well as the bulk of the material. By the provision of protruding cavities in the tissue sheet and a relatively large number of cavities, an excellent bulk is achieved in the product.

The distance from the centre of the opening of one cavity to that of an adjacent cavity has great influence on the bulk of the material, and thus also on the absorbency. This distance should preferably be 0,5-40 mm, more preferably 1-20, and most preferably 2-10 mm. Moreover, the cavities 2, which may have protrusions 5, that are provided in the tissue sheet result in the tissue sheet having a larger specific area for a given weight, which in turn results in an increased absorption in the materials.

The bulk of an absorbent tissue sheet provided with openings according to the present invention is preferably 3-30 cm^3/g, more preferably 5-25 cm^3/g and most preferably 10-20 cm^3/g. The basis weight is preferably 10-80 g/m^2, more preferably 10-50 g/m^2 and most preferably 15-40 g/m^2 and the local thickness of the tissue sheet is 50-800 μm.

The effective thickness of a tissue sheet or ply is determined according to SCAN-P 47:83, modified in that it is performed on one sheet or ply instead of eight sheets or plies. The effective thickness of a tissue sheet according to the present invention is in many cases a measure of the depth y of the cavities.

The density of a tissue sheet or ply is determined by means of the thickness and basis weight values, density = basis weight / thickness. The wet strength of the product is determined according to SCAN-P 58:56, as the tensile strength for a strip of 50 mm width, which was soaked in water during 15 seconds before the measurement. The geometrical mean value is calculated from the wet strength values measured in the machine direction and the transversal direction respectively. The dry strength of the product is determined according to SCAN-P 44:81. The relative wet strength is calculated as the quotient between the geometrical wet strength mean value and the geometrical dry strength mean value and is expressed in %. A product is considered being wet strong when the relative wet strength exceeds 15 %.

Wet bulk is measured by a thickness measuring device, which meet the requirements of SCAN-P 47:83. The measurement is performed on a tissue sheet, which is thoroughly moistened, whereupon the measurement is performed. The bulk is calculated as thickness/conditioned basis weight (conditioning performed according to SCAN-P 2:75).

As the cavities are wet stable, they will maintain their shape also when wet. The wet stability is achieved by means of the design of the cavities and that the cavities and their openings were provided in the tissue sheet when it still was wet, and that the sheet was then dried in this shape, as is described below. The wet stability may be enhanced by the addition of wet strength agents during the manufacturing of the tissue sheet. The paper then retains at least some of its strength when wet, typically 25 % is retained.

The present invention also relates to a method of manufacturing of a lignocellulosic tissue sheet provided with wet stable cavities with openings, which method includes the steps of:

a) depositing an aqueous fibre suspension on a paper machine forming fabric or between two forming fabrics and dewatering it, so as to obtain a wet paper web 81,

b) transferring of the wet paper web 81 to a patterning paper machine fabric 82, where the web is shaped and provided with openings against the patterning fabric 82, which comprises a plurality of indentations 83 intended to create cavities with openings. Each such indentation has an opening 85, , which is in the plane of the side 90 of the patterning fabric 82, which faces the wet paper web. The wet paper web is provided with openings by suction and/or blowing of air through the paper web 81 and the patterning fabric 82 in the direction from the paper facing side 90, by means of vacuum and/or over-pressure such that openings 87 are formed in those parts of the wet paper web that are formed against the indentations 83, and

c) drying the paper web on the patterning fabric 82.

A preferred way of drying the paper web in step c) is to blow hot air through the paper web.

The forming and patterning fabrics are preferably woven fabric clothing, but may also be moulded polymer belts or perforated plastic foils. Figure 8 shows a patterning fabric 82 according to the invention, having a wet paper web on top of it, which paper web is being shaped against the patterning fabric according to the method described above. The paper facing side 90 of the patterning fabric is the side that is in contact with the paper web 81. The patterning fabric is provided with indentations 83 intended to create cavities with openings in a specific desired pattern.

There is a height difference between the upper plane of the patterning fabric and the bottom 86 of the indentations 83 intended to create cavities with openings, i.e. between the plane on the paper facing side 90 of the patterning fabric, on which the intermediate part of the web is formed in contact with the fabric, and the lowest point of the indentation where a cavity is created. The fibres in the paper web will deflect or bend downwards at the indentations 83 intended to create cavities with openings. The bending of the fibres in the downward direction is increased by vacuum and/or air streams and to

some extent also by any possible water originating from the fibre suspension that might remain in the paper web, and which flows downwards in the indentations 83.

Vacuum can be achieved by placing suction boxes under the patterning fabric and air streams are obtained by blowing air from above, through the paper web and the patterning fabric, in the direction of the bottom 86 of the indentations, by means of blowing devices, e.g. one or more air gaps that guide the concentrated air flow.
The fabric may also have other indentations, which are intended to give the intermediate area a three-dimensional structure. Such indentations are made in the fabric in such a way, so that they will not create any cavities with openings of the kind mentioned above.

The forming fabric, upon which the fibre suspension is deposited and the wet paper web is formed, may travel at a higher speed than the patterning fabric. This facilitates the forming of the three-dimensional structure. When the paper web reaches the patterning fabric, it is impeded by the lower travelling speed of the patterning fabric, which results in an excess of material in the paper web.

This excessive material must move in some direction and moves then typically in the z-direction, and is then advantageously sucked down into the indentations in the patterning fabric by means of the vacuum that is present in connection with the transfer between the forming fabric and the patterning fabric. The paper web including the excessive material is thus formed against the patterning fabric. The vacuum as such also contributes to the forming of the paper web against the patterning fabric.

A vacuum box, a so-called moulding box, placed after transferring the web to the patterning fabric, can enhance the forming of the three-dimensional structure. Such a vacuum box can work with vacuum up to or even exceeding 60 kPa. The high vacuum will help pulling the wet web into the structure of the patterning fabric. The vacuum needs to be adjusted considering e.g. choice of fibres and basis weight.

As the fibres become bent along the walls 88 of the indentations 83 intended to create cavities with openings, and are partly drawn down into these indentations, the spaces between the fibres increase and the density in these parts of the paper web decreases. This leads to a lower air resistance in these parts and air that is sucked down by the under-pressure acting from below, or is blown downwards through the paper web and the patterning fabric, will choose to flow through these areas and accordingly blows the fibres away from each other, such that openings 87 are formed. The openings 87 are formed in the bottom area 86 of the indentations 83 intended to create cavities with openings and correspond to the openings of the tissue sheets, shown in other drawings.

Figures 8 and 9 show simplified schematic illustrations of different patterning fabrics. The patterning fabric 82 in Figure 8 is designed such that the bottom areas 89 of the indentations intended to create cavities with openings have a lower air resistance than the rest of the patterning fabric, thanks to the weaving technique, and the air streams will thus choose to travel through these areas. By reason of this, the fibres in the paper web will be blown apart and openings 88 will be formed in these areas.

In an alternative design, shown in Figure 9, the indentation 93 intended to create cavities with openings extend throughout the thickness of the patterning fabric 92, thereby constituting a hole 93 through the patterning fabric.

As compared to perforation of a dry paper web, the method of the present invention presents a lenient way of providing openings in a paper web. No hydrogen bonds will be broken and no fibres will break when openings are provided in a wet paper web according to this method. As the fibres bend or deflect downwards into the cavities and are "dragged" down into the indentations, the specific surface of the paper web, i.e. the tissue sheet, increases and the density may also decrease to some extent in this area, which contributes to the absorbency of the product. Apart from the advantages previously described, such as improved absorbency and wiping characteristics, the tissue sheet obtained by the method of this invention will thus have an improved strength, as compared to tissue sheets that have been perforated by conventional methods,.

Due to deliberate design of the manufacturing process, or as an unintentional result of variations in the manufacturing process, the creation of some cavities and their openings may not be successful. That is, some of the cavities may lack an opening. This will, however, not affect the advantageous features of the product obtained.

Since the tissue sheet with its cavities and their openings is formed while the tissue sheet is still wet and is dried in the desired shape, the fibres are locked in that position. Thanks to this, the thus obtained shape of the cavities is wet stable. Conventional perforated tissue sheets have no such wet stable cavities, since the perforation is effected by tearing up fibres in a dry paper web, i.e. the perforation is not carried out while the sheet is wet and dried subsequently after shaping.

In the method for manufacturing of an absorbent structure with wet stable cavities and intermediate regions an aqueous fibre suspension is deposited on a paper machine forming fabric or between two forming fabrics, and is dewatered so as to obtain a wet paper web 81. The wet paper web is then transferred to a patterning fabric 82 against which it is shaped. The patterning fabric comprises a plurality of indentations 83, and the wet paper web 81 is provided with openings by suction and/or blowing of air through the paper web and the patterning fabric 82. The air is blown in the direction from the paper facing side 90, by means of vacuum and/or over-pressure, such that openings 87 are formed in those parts of the wet paper web, which are formed against the indentations 83. Finally the paper web is dried while still on the patterning fabric.

The indentations in the patterning fabric 83 intended to create cavities with openings of the patterning fabric 82 have openings 85, which are situated in the upper plane of the fabric and have an area of 0,01-50 mm^2, preferably 0,05-28 mm^2 and most preferably 0,2-20 mm^2. The number of indentations 83 in the patterning fabric 82 is 0,5-40 per cm^2, preferably 1-20 per cm^2 and most preferably 2-10 per cm^2 and the distance between the centre of each indentation 83 is 0,5-40 mm, preferably 1-20 mm and most preferably 2-10 mm. The distance between the indentations and the number of indentations results in a

tissue sheet with high bulk and excellent absorbency. The indentations intended to create cavities with openings are evenly distributed in the patterning fabric, preferably in a regular pattern. However, in some cases an irregular pattern may be advantageous.

The patterning fabric used in the present invention is preferably a TAD-fabric (Through Air Drying fabric). This fabric is preferably used also for drying the paper web after shaping the cavities. Drying may thus take place in the same production stage as the forming of openings in the paper web, but the paper web must necessarily be wet when starting the forming of openings. Being wet means that the dry content is 50% or lower. The paper web 81 is preferably dried by blowing hot air through it, when it is still in contact with the fabric. This contributes greatly to the wet stability of the tissue sheet, since the drying operation locks the tissue sheet and its cavities and protrusions in the desired shape.

One example of a TAD fabric, which is suitable for provision of openings in a tissue sheet according to the present invention, is disclosed in PCT application WO 00/63489. This fabric presents a three-dimensional surface pattern including indentations intended to create cavities with openings on the side of the fabric clothing intended to be in contact with the paper web. There are also other kinds of indentations, which are intended to give the intermediate area a three-dimensional structure. These later indentations will not give any holes. This patterning fabric thus has the characteristics required for provision of openings in a wet paper web, when used in the method of the present invention, provided that a sufficient under-pressure by means of vacuum is used or that an air stream of sufficiently high pressure is blown through the paper web and the patterning fabric.

In such a TAD fabric the weft and warp threads are arranged such that at certain points in the clothing, the warp threads are on top in three successive crossings between weft and warp threads, and at certain other points in the clothing, the weft threads are on top in three successive crossings between weft and warp threads. By this arrangement the threads are lifted at certain places and a surface pattern having relatively deep indentations is formed on the side of the fabric or clothing that is in contact with paper

web. Figure 12 shows a surface profile of a TAD fabric such as the one described in WO 00/63489, as seen from above, obtained by a UBM measuring system (UBM Messtechnik GmbH (Ottostr. 2, D-76275 Ettlingen, Germany)). The surface profile indicates, by means of a grey-scale, the height level of the thread that has the uppermost position in the fabric at a specific measuring point and the surface profile is calculated from several measuring points, whereby a light colour indicates a higher level than a dark colour. In Figure 11, the threads positioned closest to the paper web appear as white lines, which form a square. Within some squares (121), there are supporting threads, and no openings are formed in the paper web in these areas. This kind of indentation is supposed to give the intermediate area a three-dimensional structure. Within other squares (122), there are no supporting threads, and in these areas openings are formed in the paper web. These indentations are intended to create openings.

The method for manufacturing of the tissue sheet provided with openings starts by forming a wet paper web from an aqueous fibre suspension. The fibre suspension may contain wet strength agents in order to achieve a further improved wet strength in the final tissue sheet. Conventional wet strength agents may be used, such as polyamide-amine-epichlorohydrin resins, cross-linked polymer formaldehyde resins or aldehyde derivatives of polyamide resins.

All kinds of paper pulp may be used in the invention, including different fibre types. Synthetic fibres, such as various thermoplastic fibres, e.g. polyester, polypropylene, polyamide, polyvinyl alcohol; vegetable fibres, e.g. flax, abbaca, cotton; or regenerated fibres, e.g. viscose, lyocell, acetate or other man-made fibres may also be used.

In the method described above, the wet paper web is formed on a separate forming fabric, and is subsequently transferred to a patterning fabric. As an alternative, the wet paper web may instead be formed directly on the patterning fabric.

The invention also relates to a method for manufacturing a lignocellulose containing tissue product, wherein at least a first tissue sheet is provided with openings according to the present invention and is brought together with a second tissue sheet provided with

openings and/or a substantially flat tissue sheet without cavities. A single tissue sheet can also be used as a 1-ply product. Multi-ply products can contain one or more plies with openings.

It is possible that both sides of the sheet have openings with the same size, but it is prefered that the openings of one side are larger than on the other side.

The absorbent tissue product of the present invention may be built up in different ways. The best effect is achieved by a multi-ply product. Figures 2 to 7 show cross sectional schematic views of multi-ply products, which for example include two tissue sheets or plies 21, 31, 41, 22, 32, 42, provided with openings, one ply being superimposed on the other. In Figures 2-7 the tissue sheets are shown schematically and the cavities of each sheet or ply have openings that are larger on one side than on the other..

The sheets or plies may be arranged such that the sides with small openings 23, 24 and 33, 34, respectively, are directed towards each other, as in the embodiment shown in Figure 3, or away from each other, as in the embodiment shown in Figure 2, or a combination thereof, i.e. both sheets 41, 42 have the same direction, as in the embodiment shown in Figure 4.

When the small openings 35 of both plies are directed towards each other, as in Figure 3, a product having excellent absorbency and high bulk is achieved. The high absorbency is related to the suction of liquid into the large openings 36 of the cavities, and both sides of the product can be used against the surface to be wiped. Both plies 31, 32 have their large openings 36 directed outwards and the liquid is sucked into the large opening and is sucked further towards the centre of the multi-ply product. The liquid will be retained in the product, between the plies, since capillary forces prevent the liquid from entering the small openings 35. The liquid cannot leave the product through the opposite ply, since this ply is also directed with its small openings 35 facing inwards. In the case the small openings 35 of one ply reach the inner side of the other ply 32, the inner side being the side facing towards the interior of the product, the absorbency is further improved. This

is even more pronounced in the case that the small opening is surrounded by protrusions. Liquid will then be sucked through the fibres in the cavity walls right in to the other ply, which absorbs the liquid.

In the alternative embodiment shown in Figure 2, the small openings 25 are instead directed away from each other in an absorbent multi-ply product. This absorbent product is primarily suitable for wiping of dirt or impurities that are difficult to remove from a surface, such as various kinds of dirt in the industry, but it has also a reasonable absorbency, thanks to its relatively high bulk. The small openings 25 will be directed towards the surface to be wiped, irrespective of which side is used against the surface. The protrusions 25 easily capture dirt or impurities and are able to absorb liquid to some extent. As an additional advantage, the spaces between the small openings 25 form pockets, in which dirt can be collected and transported away from the wiped surface.

In the further alternative embodiment, shown in Figure 4, the plies may be arranged in the absorbent product such that the small openings of both plies are directed in the same direction. The side 43 of the first ply 41, on which the small openings 45 are, is then arranged such that it faces the side 44 of the second ply 42, that has large openings. This embodiment provides a product that is highly absorptive from one side, i.e. from the side on which the ply 41 is arranged, having its large openings 46 directed outwards from the product, and has an excellent dirt capturing ability from the other side, which has the ply 42 arranged such that the small openings 45 are directed outwards. The product of this embodiment is preferably provided with some kind of indication as to what side is to be used for what purpose, in order to facilitate the determination of which side is primarily intended for absorption (e.g. provided with a marking symbolising water droplets), and which side is primarily intended for wiping of dirt (e.g. provided with a marking symbolising dirt). As an alternative the different plies may be made of paper webs of different colours.

The embodiments shown in the drawings have their tissue sheets or plies arranged such that the openings are not positioned directly above each other. If desired, the plies may

however alternatively be arranged such that the openings are positioned directly above each other, although not shown in the drawings.

A further embodiment of an absorbent product is shown in Figure 5, in which a ply 51 provided with openings is brought together with a substantially flat tissue ply 52. As the side 53 of the ply 51, with small openings is directed towards the interior of the product and towards the flat ply 52, the absorbent product will attain excellent absorbency. In use the ply provided with large openings should be directed against the surface to be wiped, and the large openings 56 are then directed towards the liquid to be wiped and absorbed. By means of capillary forces the liquid is sucked into the openings. The small openings should preferably be in direct contact to the flat tissue ply 52. This further contributes to the suction of liquid towards the flat tissue ply 52, since the fibres in the tops 57 of the protrusions 55 that are in contact with the flat ply draw the liquid further into the substantially flat ply 52. The substantially flat ply 52 has the further advantage of having higher strength than a ply provided with openings. When used for wiping the product is directed with the ply provided with openings turned towards the surface to be wiped, and the flat ply, having no openings is directed upwards. No openings, through which dirt or impurities might reach the user's hand, are thus directed towards the user, and the liquid is better retained in the product, in the ply nearest to the user. The product may advantageously be marked, in order to indicate to the user, which of the sides that is intended to be directed towards the surface to be wiped. This applies to all multi-ply products having different outer sides.

Figure 6 shows yet another embodiment of an absorbent product, comprising one ply 61, provided with cavities with openings, and one substantially flat ply 62. Ply 61 is arranged such that the side with small openings is arranged with small openings directed outwards. If the openings are surrounded by protrusions 65, they will point outwards. This absorbent product is highly suitable for removal of dirt from a surface, since the protrusions 65 of the funnel shaped cavities "scratch" dirt off the surface. The removed dirt particles can be transported in the pockets between the protrusions 65. The other side of the product has a relatively good absorbency, although there is a risk that liquid might

leak out through the cavities. Accordingly this embodiment is thus primarily intended for wiping of dirt or impurities.

All the above embodiments may additionally comprise one or more substantially flat tissue plies. The embodiments comprising two plies that are provided with openings, as described above, may include at least one substantially flat tissue ply 73, preferably arranged between the plies 71, 72, provided with openings, as indicated in Figure 7. If the small openings are surrounded by protrusions, they should be directed inwards and towards the flat ply 73. Excellent absorbency is achieved due to the capillary forces discussed above, and the suction capacity through the fibres in the protrusions 75 that may be in contact with the flat ply 73 and which lead the liquid into the flat ply is also improved. Several combinations of plies, in addition to the above mentioned, lie within the concept of the present invention.

The tissue sheet or ply provided with cavities with openings used in the absorbent products is manufactured by the method of the present invention. This new method of manufacturing a tissue sheet with cavities with openings results in the provision of tissue sheets having excellent properties, such as strength, wet stability and absorption characteristics. This in turn, leads to highly improved properties of the products in which the tissue sheets are utilised.

When the tissue sheet is oriented in the product such that the small openings are directed inwards towards another tissue sheet, whereby the large openings of the cavities are directed against the surface to be wiped, a tissue product having excellent absorbency is obtained, since liquid is effectively absorbed into the cavities, via their large openings, by means of capillary forces.

When the tissue sheet is oriented in the product such that the small openings are directed outwards and away from another tissue sheet, , the tissue product obtained has a good ability remove dirt or impurities by means of the cavity protrusions and their top openings.

The method according to the present invention produces a good and strong tissue sheet, provided with openings.

Example

A tissue sheet was manufactured on a pilot machine with twin-wire forming, a TAD section and a Yankee cylinder. In the examples two different TAD fabrics of the type described in WO 00/63489 were used. Both fabrics were similarly woven, such as having the same yarn count and yarn diameter. The fabric used in example 1-3 has two kinds of indentations: the ones intended to create cavities with openings and the ones intended to give the intermediate area a three-dimensional structure. The former indentations have high local air permeability in the indentations intended to create openings. The indentations therefore have normal local air permeability. The first fabric had 5,6 indentations per cm^2 indented to give openings and equally as many for three-dimensionality. The second fabric had altogether 11,2 indentations per cm^2. The following machine settings applied to all examples 1-5:

Machine speed: 600 m/min
Speed difference between the inner fabric and the TAD fabric: + 6%
Pick-up vacuum: 17 kPa
Pulp: wood-free deinked pulp (P2D from Unifibres Ltd)
Wet strength agent: Kymene SLX (Polyamide-amine epichlorohydrin): 10 kg active/ton

Table 1

Machine settings	TAD fabric with high local air permeability			TAD fabric with normal local air permeability	
Example	1	2	3	4	5
Forming box vacuum (kPa)	16	13	10	19	15
Under-pressure in TAD-cylinder (kPa)	1,67	1,94	1,17	1,73	3,35
Refining (°SR)	20	30	30	30	50

Table 2

Paper properties	Example				
	1	2	3	4	5
basis weight (g/m^2)	21,2	22,0	15,7	22,0	20,4
Relative amount of openings (% of protrusions)	34 % of intended	38 % of intended	52% of intended	3% of all	5% of all
No. Of openings per cm^2	1.9	2.1	2.9	0.3	0.6
Tensile strength dry (MD) N/m	136	205	147	152	235
Tensile strength dry (CD) N/m	109	146	85	120	151
Tensile strength wet (MD) N/m	47	82	48	52	76
Tensile strength wet (CD) N/m	42	49	29	38	50
Thickness dry (1 ply) μm	433	490	410	520	583
Thickness wet (1 ply)	270	320	223	297	333
Wet bulk (cm^3/g)	12,7	14,5	14,4	13,5	16,3

The Examples show that tissue sheets manufactured on a TAD fabric like in Examples 1-3 achieve a considerably larger number of openings than a corresponding tissue sheet manufactured on the fabric used in Examples 4-5. Although comprising a large number of openings, the tissue sheets in Examples 1-3 nevertheless have a strength, wet strength and wet bulk that are quite comparable to the tissue sheet of Examples 4-5.

Claims

1. An absorbent tissue product comprising at least one sheet of an absorbent structure consisting of lignocellulose fibres, said structure having cavities and intermediate regions **characterised in** that said cavities have openings towards both sides of said structure and show wet stability, i.e. that the distance (y) between the openings at each end of a cavity and the areas (a_1) and (a_2) of said openings are essentially not decreased upon wetting of said structure, except for what is caused by swelling of the fibres.

2. The absorbent tissue product of claim 1, wherein the distance (y) between the openings of the cavities (2) exceeds the local thickness (x) of the intermediate regions.

3. The absorbent tissue product of claim 2, wherein the distance (y) between the openings is at least 1,1, preferably 1,5 and most preferably 2 times the local thickness (x) of the tissue sheet.

4. The absorbent tissue product of claim 1, wherein the wet bulk exceeds 5 g/cm^3, preferably 8 g/cm^3 and most preferably 10 g/cm^3.

5. The absorbent tissue product of any one of the preceding claims, wherein the larger openings (7) have an area a_1 and the smaller openings (9) have an area a_2 and that a_1 is larger than a_2, preferably 1,5 times larger, and most preferably 2 times larger than a_2.

6. The absorbent tissue product of any one of the preceding claims, wherein the cavities are tapered, such that the cross sectional area is decreasing through the structure from the larger opening to the smaller opening.

7. The absorbent tissue product of any one of the preceding claims, wherein a_1 is 0,01-50 mm^2, preferably 0,05-28 mm^2 and most preferably 0,2-20 mm^2 and a_2 is 0,01-50 mm^2, preferably 0,05-20 mm^2 and most preferably 0,2-13 mm^2.

8. The absorbent tissue product of any one of the preceding claims, wherein the number of cavities (2) in the tissue sheet is 0,6-40 per cm^2, preferably 1-20 per cm^2 and most preferably 2-10 per cm^2 and the distance between the centres of adjacent cavities (2) is 0,5-40 mm, preferably 1-20 mm and most preferably 2-10 mm.

9. The absorbent tissue product of any one of the preceding claims, wherein the intermediate regions mainly are located in the same plane as the openings with smaller area.

10. The absorbent tissue product of any one of the preceding claims, wherein the cavities (2) are distributed over the absorbent structure (1) in a regular pattern.

11. The absorbent tissue product of any one of claims 1-9, wherein the cavities (2) are distributed over the absorbent structure in some areas, whereas other areas of the absorbent structure are free from cavities.

12. The absorbent tissue product of any one of the preceding claims, wherein the product comprises at least two absorbent structures of which at least one with cavities according to claims 1-11 and where the planar structure with cavities is arranged as an outer layer.

13. A method for manufacturing of an absorbent structure from lignocellulose containing material with wet stable cavities and intermediate regions which method comprises the steps of:

a) depositing an aqueous fibre suspension on a paper machine forming fabric or between two forming fabrics, and dewatering it so as to obtain a wet paper web 81,

b) transferring of the wet paper web 81 to a patterning fabric 82, where the web is shaped against the patterning fabric(82), which comprises a plurality of indentations (83), whereupon the wet paper web is provided with openings by suction and/or blowing of air through the paper web (81) and the patterning fabric (82) in the direction from the paper facing side (90), by means of vacuum and/or over-pressure, such that openings (87) are formed in those parts of the wet paper web, which are formed against the indentations (83), and

c) drying the paper web on the patterning fabric (82).

14. The method of claim 13 for manufacturing of a sheet with wet stable cavities, wherein the wet paper web is shaped and provided with openings against the patterning fabric (82), the indentations of which have one opening (85), having an area of 0,01-50 mm^2, preferably 0,05-28 mm^2 and most preferably 0,2-20 mm^2, and the number of indentations (83) in the patterning fabric is 0,5-40 per cm^2, preferably 1-20 per cm^2 and most preferably 2-10 per cm^2, the distance between the centre of adjacent indentations (83) is 0,5-40 mm, preferably 1-20 mm and most preferably 2-10 mm.

15. The method of claim 13 or 14 for manufacturing of a wet stable tissue sheet, wherein the funnel shaped indentations are distributed over the patterning fabric.

16. The method of any one of claims 13-15 for manufacturing of a sheet with wet stable cavities, wherein the patterning fabric (82) has a lower air resistance in the area (89) of each indentation intended to give cavities (83) than in the rest of the patterning fabric (82).

17. The method of any one of claims 13-16 for manufacturing of a sheet with wet stable cavities, wherein each indentations (93) extends throughout the entire depth of the patterning fabric (92) such that through holes appear in the patterning fabric (92).

18. The method of any one of claims 13-17 for manufacturing of a sheet with wet stable cavities, wherein the product obtained is wet strong.

19. The method of any one of claims 13-18 for manufacturing of a wet stable tissue sheet, wherein the wet paper web (81) is dried in step c) by being blown-through by hot air.

20. A method for manufacturing of a tissue product of lignocellulose containing material, **characterized in** that at least one tissue sheet is provided with openings by the method of claims 13-19 and is brought together with at least one other tissue sheet provided with cavities and openings and/or at least one substantially flat tissue sheet without cavities.

1 / 3

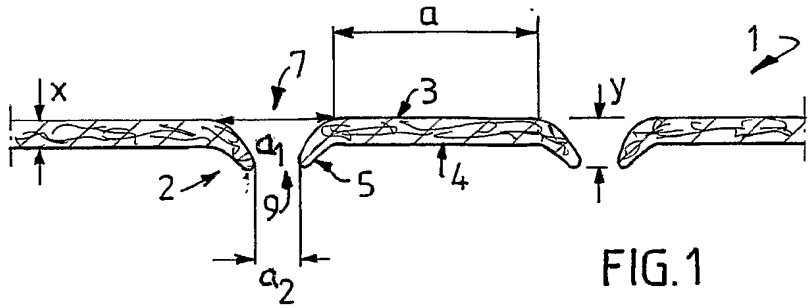

FIG.1

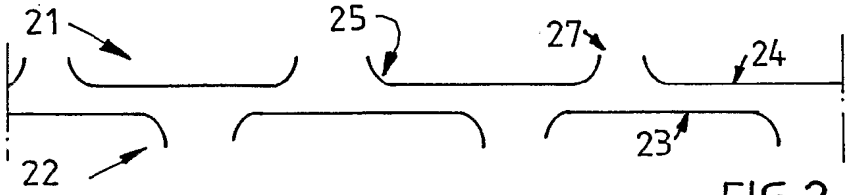

FIG.2

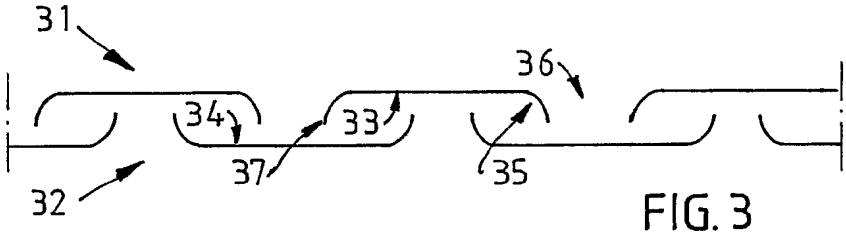

FIG. 3

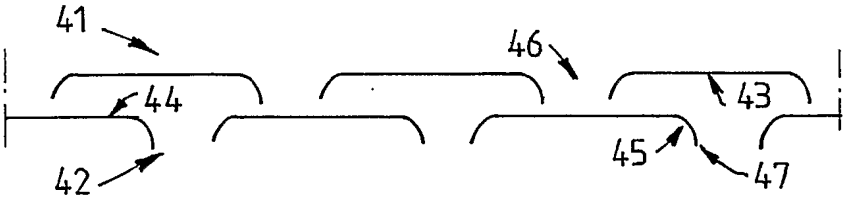

FIG.4

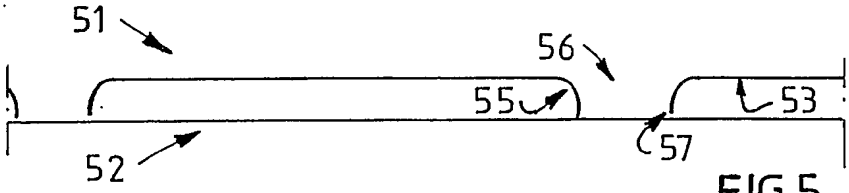

FIG.5

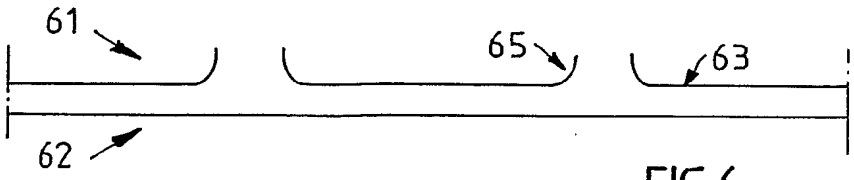

FIG.6

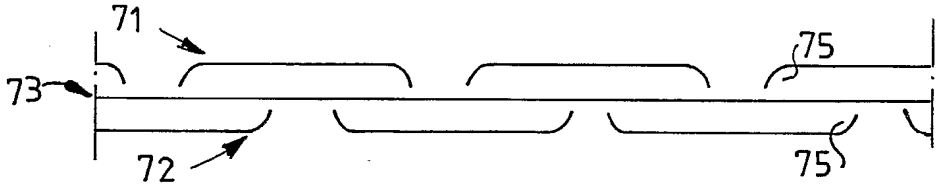

FIG.7

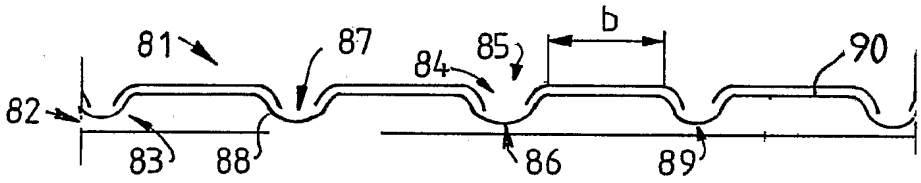

FIG.8

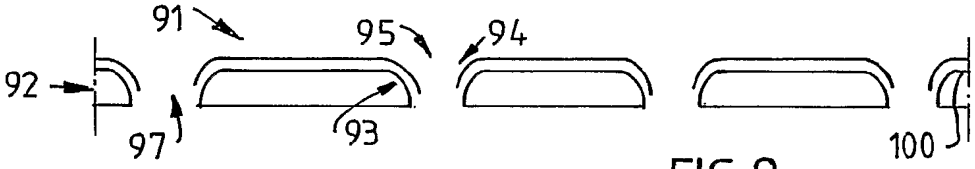

FIG.9

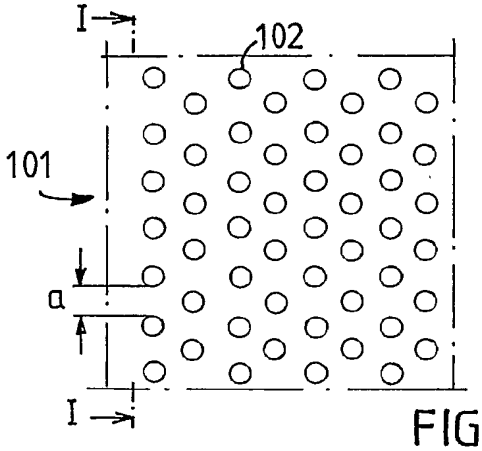

FIG.10

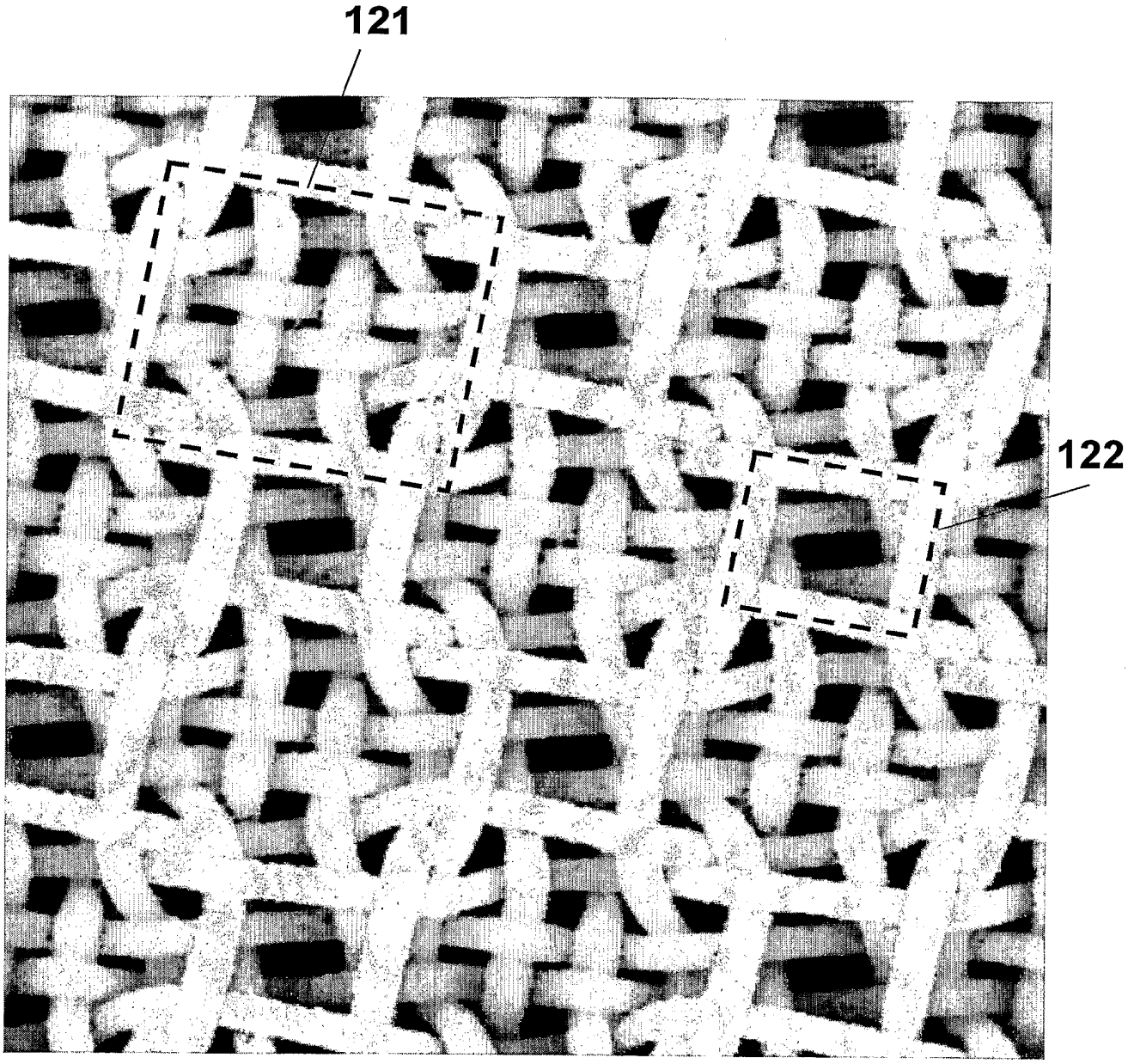

FIG. 11

INTERNATIONAL SEARCH REPORT

International application No.
PCT/SE 2004/000307

A. CLASSIFICATION OF SUBJECT MATTER

IPC7: A61F 13/15, D21H 11/02, D21F 11/14
According to International Patent Classification (IPC) or to both national classification and IPC

B. FIELDS SEARCHED

Minimum documentation searched (classification system followed by classification symbols)

IPC7: A61F, D21H, D21F

Documentation searched other than minimum documentation to the extent that such documents are included in the fields searched

SE,DK,FI,NO classes as above

Electronic data base consulted during the international search (name of data base and, where practicable, search terms used)

WPI DATA, PAJ, FULLTEXT, INSPEC, EPODOC

C. DOCUMENTS CONSIDERED TO BE RELEVANT

Category*	Citation of document, with indication, where appropriate, of the relevant passages	Relevant to claim No.
X	US 20020103469 A1 (CHEN ET AL), 1 August 2002 (01.08.2002), figures 5,18-19, page 2, [0013]-[0014], page 1,[0010], page 17,[0141], page 5,[0031] --	1-20
A	US 6241714 B1 (RAIDEL ET AL), 5 June 2001 (05.06.2001), figures 2-7,10-11, column 3, line 30 - column 6, line 3 --	1-20
A	GB 2006296 A (KIMBERLY-CLARK CORPORATION), 2 May 1979 (02.05.1979), figures 1-4, column 1, line 3 - column 2, line 4 --	1-20

[X] Further documents are listed in the continuation of Box C. [X] See patent family annex.

* Special categories of cited documents:
"A" document defining the general state of the art which is not considered to be of particular relevance
"E" earlier application or patent but published on or after the international filing date
"L" document which may throw doubts on priority claim(s) or which is cited to establish the publication date of another citation or other special reason (as specified)
"O" document referring to an oral disclosure, use, exhibition or other means
"P" document published prior to the international filing date but later than the priority date claimed
"T" later document published after the international filing date or priority date and not in conflict with the application but cited to understand the principle or theory underlying the invention
"X" document of particular relevance: the claimed invention cannot be considered novel or cannot be considered to involve an inventive step when the document is taken alone
"Y" document of particular relevance: the claimed invention cannot be considered to involve an inventive step when the document is combined with one or more other such documents, such combination being obvious to a person skilled in the art
"&" document member of the same patent family

Date of the actual completion of the international search	Date of mailing of the international search report
10 November 2004	19 -11- 2004
Name and mailing address of the ISA/ Swedish Patent Office Box 5055, S-102 42 STOCKHOLM Facsimile No. +46 8 666 02 86	Authorized officer BEATE SLUSARCZYK/BS Telephone No. +46 8 782 25 00

(12) INTERNATIONAL APPLICATION PUBLISHED UNDER THE PATENT COOPERATION TREATY (PCT)

(19) World Intellectual Property Organization
International Bureau

(43) International Publication Date
27 August 2009 (27.08.2009)

PCT

(10) International Publication Number
WO 2009/105000 A1

(51) International Patent Classification:
A61F 13/512 (2006.01) *D04H 1/54* (2006.01)
B32B 5/22 (2006.01)

(21) International Application Number:
PCT/SE2008/050193

(22) International Filing Date:
19 February 2008 (19.02.2008)

(25) Filing Language: Swedish

(26) Publication Language: English

(71) Applicant *(for all designated States except US)*: **SCA HYGIENE PRODUCTS AB** [SE/SE]; S-SE-405 03 Göteborg (SE).

(72) Inventors; and
(75) Inventors/Applicants *(for US only)*: **ANDERSSON, Patrik** [SE/SE]; Hedens väg 45, S-427 42 Billdal (SE). **PERSSON, Anders** [SE/SE]; Ålvägen 8, S-663 40 Hammarö (SE).

(74) Agent: **ROMARE, Anette**; ALBIHNS GöTEBORG AB, Box 142, S-401 22 Göteborg (SE).

(81) Designated States *(unless otherwise indicated, for every kind of national protection available)*: AE, AG, AL, AM, AO, AT, AU, AZ, BA, BB, BG, BH, BR, BW, BY, BZ, CA, CH, CN, CO, CR, CU, CZ, DE, DK, DM, DO, DZ, EC, EE, EG, ES, FI, GB, GD, GE, GH, GM, GT, HN, HR, HU, ID, IL, IN, IS, JP, KE, KG, KM, KN, KP, KR, KZ, LA, LC, LK, LR, LS, LT, LU, LY, MA, MD, ME, MG, MK, MN, MW, MX, MY, MZ, NA, NG, NI, NO, NZ, OM, PG, PH, PL, PT, RO, RS, RU, SC, SD, SE, SG, SK, SL, SM, SV, SY, TJ, TM, TN, TR, TT, TZ, UA, UG, US, UZ, VC, VN, ZA, ZM, ZW.

(84) Designated States *(unless otherwise indicated, for every kind of regional protection available)*: ARIPO (BW, GH, GM, KE, LS, MW, MZ, NA, SD, SL, SZ, TZ, UG, ZM, ZW), Eurasian (AM, AZ, BY, KG, KZ, MD, RU, TJ, TM), European (AT, BE, BG, CH, CY, CZ, DE, DK, EE, ES, FI, FR, GB, GR, HR, HU, IE, IS, IT, LT, LU, LV, MC, MT, NL, NO, PL, PT, RO, SE, SI, SK, TR), OAPI (BF, BJ, CF, CG, CI, CM, GA, GN, GQ, GW, ML, MR, NE, SN, TD, TG).

Declarations under Rule 4.17:

— *of inventorship (Rule 4.17(iv))*

Published:

— *with international search report (Art. 21(3))*

(54) Title: MATERIAL WEB FOR USE IN AN ABSORBENT ARTICLE

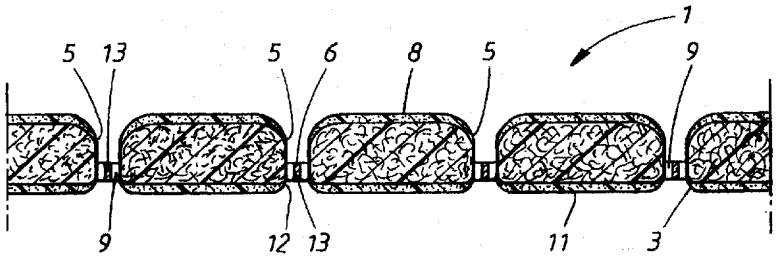

FIG.2

(57) Abstract: The present invention concerns a material web (1; 41; 81) comprising at least one fibrous material layer (2, 3; 42; 43; 82, 83) and having a first and a second surface (8, 11), which material web comprises recesses (5) in the first surface (8), which recesses (5) have a diminishing cross-sectional area along at least a part of their extension in a direction towards the second surface (8). The material web further comprises recesses (12) in the second surface (11), which recesses (12) have a diminishing cross-sectional area along at least a part of their extension in a direction towards the first surface (8), and which form pairs with opposite recesses (5) in the first surface (8). The recesses (5, 12) in at least some of the pairs are connected to each other via at least one hole (9, 10). The invention also concerns a method for producing such a material web (1; 41; 81) and an article (80) comprising such a material web.

WO 2009/105000 A1

MATERIAL WEB FOR USE IN AN ABSORBENT ARTICLE

TECHNICAL FIELD

The present invention concerns a material web for use in an absorbent article, which material web comprises at least one fibrous material layer and has a longitudinal direction, a transverse direction and a thickness direction as well as a first and a second surface, which surfaces are situated on opposite sides of the material web and of which one surface is intended to face towards the user of the article while the opposite surface is intended to face away from the user of the article. The material web comprises recesses in the first surface with an extension in the thickness direction of the material web, which recesses have a diminishing cross-sectional area along at least a part of their extension in a direction towards the second surface. The present invention also concerns an absorbent article comprising such a material web and a method for producing such a material web.

BACKGROUND ART

Absorbent articles which are intended for single use usually comprise a liquid-permeable surface layer, which faces towards the body of the user during use. A surface layer of this type is often constituted by a nonwoven material, i.e. a fibre material in which the constituent fibres have been bonded together in some way other than weaving, knitting or similar methods which give a regular fibre arrangement.

It is also known to arrange a liquid transfer layer between the surface layer and an absorbent body contained in the article. A liquid transfer layer of this type should have the ability to quickly receive large quantities of liquid and spread the liquid, and also temporarily store the liquid before it is absorbed by the absorbent body below. This is of great importance, especially in the case of modern slim compressed absorbent bodies, which often have a high content of superabsorbents. Such materials have, certainly, a high absorption capacity; however, in many cases they have an acquisition rate that is much

too low to be able to instantaneously absorb the large quantity of liquid which can be emitted in only a few seconds during urination. A porous, relatively thick liquid transfer layer, for example in the form of a fibrous wadding, a bonded or unbonded carded fibre layer or some other form of fibre material, has high instantaneous liquid acquisition capacity and can temporarily store the liquid until it can be absorbed by the absorbent body. These circumstances also apply to porous foam material. For the absorbent article to be able to receive repeated volumes of liquid, the liquid transfer layer must have time to be essentially emptied of liquid between each wetting. The porous structure of the liquid transfer layer thus suitably works in combination with a denser and/or more hydrophilic absorbent body.

The liquid transfer layer and the liquid-permeable surface layer can be joined together when heated to form a material web in the form of a laminate by using, for example ultrasound or hot calendering. At least one of said liquid transfer and surface layers comprises a thermoplastic material, which melts on heating and bonds together the two layers. At the bonds, recesses are formed in the laminate, giving the laminate a three-dimensional surface structure. However, the material webs obtain a more or less liquid-impermeable character at the bottoms of the recesses, which would lead to reduced liquid-permeability at the bonds. Thus, liquid received by the article will gather in the recesses and not be led on into the underlying absorbent structure.

A solution to the above-mentioned problem is to replace the recesses with penetrating holes which extend all the way through the laminate. Such holes can be produced by, for example, passing the two layers in the laminate between two binding rolls, one of which is provided with spikes, which penetrate the layers while they are being heated and bonded together in order to produce a bonded laminate with penetrating holes. However, perforating by means of spikes requires that the material layers are fed forward at low speed, especially if stable, round holes are desired, and the

slow processes result in expensive materials. This is a particularly significant problem where the manufacture of disposable articles is concerned, as the cost of materials is very important. The complexity of the manufacturing process and the wear and tear it puts on the component parts of the manufacturing device also contribute to increasing the production costs.

Penetrating holes can also be produced without spikes or similar tools, for example by means of ultrasound. A faster process, and consequently a reduction in material costs, are thus achieved. However, the material web created in this way displays a less stable three-dimensional structure, a relatively low tensile strength and poorer bonding of the layers in the material web.

Another solution to the problem is to create recesses with small holes formed in them, which holes lead the liquid down into the material web. This is known from, for example WO 93/11725, in which a heated head having a bonding surface provided with needles bonds an upper and a lower sheet to form a laminate, thus forming apertured recesses at the bonds. However, these holes only extend through the upper sheet and a certain distance down into the lower sheet.

Recesses provided with holes can, of course, also be formed in material webs comprising only one layer. A material web of this kind is described in WO 2007/035038 A1, in which a liquid transfer layer is provided with recesses, the bottoms of which recesses are in turn each provided with a penetrating hole. The hole and the recess are formed by means of a heated needle. However, these solutions also lead to high production costs due to low production speeds, complex manufacturing processes and high wear and tear on components.

Moreover, the holes in the above-described embodiments indeed give the material web greater liquid-permeability but at the same time they allow

insufficient distribution of the received liquid over underlying layers in the article. In addition, there is a risk of rewetting of the surface of the material web that faces towards a user of the article, as liquid present further inside the article forces its way up through the holes.

A first object of the present invention is to obtain a material web which displays good liquid-permeability and a stable, three-dimensional structure while at the same time giving good distribution of liquid over underlying layers and counteracting rewetting of the material web.

A second object of the present invention is to obtain an article comprising such a material layer.

A third object of the present invention is to achieve a method for creating such a material web at a low production cost.

SUMMARY OF THE INVENTION

The first object is achieved by means of a material web for use in an absorbent article. The material web comprises at least one fibrous material layer and has a longitudinal direction, a transverse direction and a thickness direction as well as a first and a second surface, which surfaces are situated on opposite sides of the material web and of which one surface is intended to face towards a user of the article while the opposite surface is intended to face away from a user of the article. The material web further comprises recesses in the first surface with an extension in the thickness direction of the material web, which recesses have a diminishing cross-sectional area along at least a part of their extension in a direction towards the second surface. The material web also comprises recesses in the second surface with an extension in the thickness direction of the material web, which recesses have a diminishing cross-sectional area along at least a part of their extension in a direction towards the first surface, and which recesses form pairs with

opposite recesses in the first surface. The recesses in at least some of the pairs are connected to each other via at least one hole.

The holes and the recesses thus form hour-glass shaped hollows or channels through the material web, which give the material web high liquid-permeability. This liquid-permeability is further increased by the diminishing form of the recesses in the first surface, which results in capillary forces leading received liquid in a direction towards and down into the holes. The presence and shape of the recesses in the second surface contribute in turn to distributing the received liquid over underlying layers in the article, while the cavity created by the recesses prevents liquid present in the absorbent core of the article from rewetting the first surface via the holes. In addition, the recesses and the holes contribute to good ventilation of the material web and the article.

The recesses also contribute to giving the material web a stable, three-dimensional structure and high tensile strength. This is due to the recesses and holes being formed in a two-step process, which is described in more detail later and which comprises the first step of forming recesses in the material web, whereupon the material web acquires a more or less film-like structure at the bottoms of the recesses. In the second step, the holes are then formed in the film-like structure at the bottoms of the existing recesses, whereupon the film-like structure partly remains and gives the finished material web the desired stable, three-dimensional structure and material strength.

Note that the recesses can have a diminishing cross-section over all or only parts of their extension and that they can thus have, for example, a cylindrical form over parts of their extension.

With regard to the extension of the recesses in the thickness direction of the material web, this can, of course, vary from case to case. In general, the

recess on one side of the material web has a greater extension in the thickness direction of the material web than the recess on the opposite side of the material web, which means that the waist of the hour-glass will usually be located closer to one of the sides. For example, recesses formed by means of ultrasound will usually be deeper on the side that faces away from the ultrasonic horn. It can be suitable to form the material web in such a way that the larger recesses are located on the side that faces towards the user during use of the article comprising the material web, and that will thus receive faeces and body fluids, which it can be desirable to store temporarily in the recesses. However, it is possible to let the waist of the hour-glass be in the middle of the material web or closer to the surface that is intended to face away from the user.

As regards the more or less film-like structure at the bottoms of the recesses, the distance it extends into the material web can vary. The extent of the film-like structures in the thickness direction of the material web depends, for example, on which materials are included in the material web, how much energy is applied to the material web in the bonding step and how much time the bonding step takes. The film-like structures at the bottoms of a pair of mutually opposite recesses may thus be present only at the bottoms of the recesses, just as they may be joined and form a continuous film-like structure.

As mentioned above, it is desirable that the material web has good liquid-permeability. This is especially the case when the material web is intended to be used in a product that is intended to receive large quantities of urine in a short time, such as an incontinence protector. Such good liquid-impermeability is suitably achieved by making the total cross-sectional area for the hole or holes that connect a recess with an opposite surface of the material web sufficiently large. A large total cross-sectional area is achieved by either a single hole with a large cross-sectional area or several holes with a smaller cross-sectional area connecting said recesses. The latter

alternative is particularly advantageous as, in addition to achieving good liquid-permeability for the material web, it is desirable to let the recesses in the first surface function as spaces for temporary storage of received faeces and more viscous body fluids. The holes are then formed with such a cross-sectional area that the remaining material in the bottom of the recesses forms a net which only allows low-viscous body fluids, such as urine, to penetrate to an underlying absorbent body. The same effect can of course be achieved with only one hole formed in the bottom of the recess but as a result of a lower liquid-permeability in the recess. Similarly, it can be desirable to prevent pulp, fibres and particles from an absorbent core in an article comprising said material web from being forced out from the article through the penetrating holes in the material web. This, too, can suitably be prevented by forming each of the holes through the material web with such a cross-sectional area that they do not allow said pulp, particles and fibres to pass through. Further advantages of forming several small holes in the apertured recesses are that small holes give a visually attractive product, which gives the impression of being able to retain applied liquid, and also that the formed net structure gives a particularly good tensile strength to the material web.

If the material web comprises at least a first and a second material layer, of which at least one comprises a thermoplastic material, it is advantageous if the thermoplastic material during the forming of the recesses is made to at least partly soften and thus bond together the two material layers at the recesses. The number of production steps is thus reduced, giving lower production costs. As is described below, the two-step method ensures that the layers are well bonded together despite the material web being perforated, as a part of the bonded structure which is formed in the first step remains after perforation in the second step.

It is possible to form holes within a first zone of the material web with an average cross-sectional area that is smaller than the average cross-sectional

area for holes within a second zone of the material web. By this means, a material web can be obtained, which, for example, is adapted within the first zone to receive low-viscous body fluids and within the second zone is adapted to receive faeces. Obviously, it is suitable if the recesses also have corresponding differences in size, so that the recesses within the first zone are adapted for temporary retention of body fluids while the recesses in the second zone are adapted for temporary retention of faeces. It should be understood that a material web can have more than one zone and also that the average density between the recesses can vary from zone to zone.

It is of course possible to provide only some of the recesses with holes, just as it is possible to provide a majority of, or all of the recesses with holes. Recesses without holes can, for example, be situated outwith the area that is intended to be liquid-permeable, or have a mainly decorative function. Usually, the bonds which lie at the side edges of the material web are those that should not be liquid-permeable and it is therefore particularly advantageous if the recesses provided with holes are situated within a part that is situated centrally in the transverse direction of the material web. An example of a way to achieve the forming of holes in only some of the recesses is for the device that creates the holes, for example a patterned roll or an ultrasonic horn, to have a different extension in the transverse direction of the material web than the device that creates the recesses.

The second object is achieved by means of an absorbent article in accordance with claim 7, comprising a material web of the type described above. The person skilled in the art would understand that the material web can be arranged in a number of different places in the article and the said first surface can face towards either the side of the article that is intended to face a user during use, or the side of the article that is intended to face away from the user. According to one preferred embodiment, the material web constitutes a liquid-permeable surface layer in the article, wherein the first surface suitably faces outwards in the article and constitutes a surface which

is intended to face towards the user during use. The material web can also comprise a liquid transfer layer situated under the surface layer. It is also advantageous if the material web comprises zones of the type described above, wherein the material web is suitably orientated in the article in such a way that the zone intended to receive low-viscous body fluids is closer to a front edge on the absorbent article, while the zone that is intended to receive faeces is closer to a rear edge on the article. As has been mentioned above, the apertured bottoms in the material web have two main functions, i.e. to let liquid into the article and to prevent fibres and particles from falling out of the article. Therefore, it is advantageous if each recess contains two or more smaller holes instead of one larger hole. The bottom of the recess thus acts as a filter which allows liquid to pass through, but not particles and other solid or highly viscous substances. This means that the material web also acts as a means of separating faeces from other body fluids. At the same time, the holes ensure that the material web obtains good liquid-permeability, which is particularly desirable when the material web is used in a product that is intended to receive large quantities of urine in a short time, such as an incontinence protector.

The third object is achieved by means of a method in accordance with claim 10 for producing an apertured structure in a material web for use in an absorbent article. The material web comprises at least one fibrous material layer and has a longitudinal direction, a transverse direction and a thickness direction as well as a first and a second surface, which surfaces are situated on opposite sides of the material web and of which one surface is intended to face towards a user of the article while the opposite surface is intended to face away from a user of the article. The method comprises the first step of forming pairs of mutually opposite recesses in the first and second surfaces, which recesses have an extension in the thickness direction of the material web, the recesses in the first surface being formed with a diminishing cross-sectional area at least along part of their extension in a direction towards the second surface and the recesses in the second surface being formed with a

diminishing cross-sectional area at least along part of their extension in a direction towards the first surface, and the second step of forming holes in the material web, which holes each connect two recesses belonging to a pair.

Forming the recesses and the holes in separate steps enables the supplying of energy to be optimised at each step. Thus, it becomes possible during the forming of the recesses, which is done in the first step, to optimise the energy supply at the bottoms of the recesses in such a way that existing thermoplastic components in the fibre structure at the said bottoms melt or are softened and form bonds between the fibres. Thus, the material web at the bottoms of the recesses will have a more or less film-like structure, which gives the material web a stable, three-dimensional structure and good tensile strength. Similarly, it will be possible in the subsequent penetration step to optimise the energy supply in such a way that at least some of the said recesses are connected by means of one or several penetrating holes. Some of the bonded, film-like fibre structure will then remain even after the perforation step, so that the finished material web obtains the desired stable, three-dimensional structure and material strength. This is considerably different to previous binding and perforation methods in which the forming of the recesses and the holes has been carried out in one step. When the binding and the perforation are carried out at the same time, so much energy is used to make holes in the material that the material at the bonds is burnt away. This is a particular problem in ultrasound processes and results in poor binding of the layers in the material web and also the material web obtaining a low material strength and a less stable three-dimensional structure.

Consequently, the two-step method means that the material web is provided with penetrating holes in existing recesses, which gives the material web good liquid-permeability compared with material webs which have only recesses.

Furthermore, the two-step method described above can be carried out with low productions costs. This is achieved above all due to the fact that the two-step method, by permitting an optimisation of the energy supply in each step, enables the creation of a stable, apertured structure using techniques, such as ultrasound and hot calendering, which allow the material web to be fed forward at high speed. By this means, not only a high production speed but also a possible synchronisation of the different process steps are achieved, making it possible to manufacture the material webs in-line. The above-mentioned techniques also contribute to low production costs by causing less wear and tear on the manufacturing device. However, it should be pointed out that lower production costs do not necessarily require the use of ultrasound or hot calendering. The two-step method also gives lower production costs when other techniques are used, wherein the recesses and holes are formed by means of raised portions and needles penetrating the material web, as the two-step method permits an optimisation of the pressure that is applied in each step and thus reduced wear and tear on the manufacturing device.

Ultrasound and hot calendering methods also result in the advantages that the manufacturing method becomes less complex and more flexible, for example with regard to the choice of size and location of the holes and recesses, and also with regard to the choice of which recesses are to be provided with holes.

As is mentioned above, it is advantageous if both steps in the above-described two-step method are carried out by means of an ultrasonic welding device comprising an ultrasonic horn, as this technique gives particularly high production speed, great flexibility and less wear and tear on the manufacturing device. It is especially suitable if the first step is carried out using an ultrasonic horn with a smooth surface facing towards the material web and if the second stage is carried out using an ultrasonic horn with a patterned or knurled surface facing towards the material web, as a patterned

or knurled surface is particularly advantageous in obtaining a good effect during perforation. However, a good result can also be achieved using hot calendering, which similarly gives high production speed, great flexibility and less wear and tear on the manufacturing device. Regardless of which technique is used, it is advantageous to use the same technique for creating the holes and the recesses, as this enables a reduction in the number of elements in the manufacturing device and, consequently, lower production costs. However, it should be understood that the scope of protection is not limited to ultrasound and hot calendering and that different techniques can be used for creating the holes and the recesses.

If it is the case that an ultrasonic horn is used to create both the recesses and the holes, it is advantageous if said ultrasonic horn works against one and the same roll. In this way, a further reduction of the number of elements in the manufacturing device is obtained, which leads to a reduction in production costs compared with using a separate roll for each horn, which is an alternative, but less preferred, possibility. This is also a means of avoiding the synchronisation problems which arise when the material web is to be put onto a second roll prior to forming the holes. In other words, it ensures in a simple manner that the penetrating holes are actually formed in the recesses, thus increasing the quality of the final product. In the same way, it is also advantageous in the case of hot calendering if the forming of the recesses and the holes is carried out against one and the same roll.

BRIEF DESCRIPTION OF DRAWINGS

The invention will now be described in more detail with reference to the attached drawings, in which

Fig. 1 shows a perspective view of a material web according to the invention,

Fig. 2 shows a cross section along the line II-II through the material web in Fig. 1,

Fig. 3a shows a view from above of a bond according to the invention,

Fig. 3b shows a view from above of a bond according to an alternative embodiment of the invention,

Fig. 4 shows a device for manufacturing a material web according to the invention,

Fig. 5a shows an embodiment of the ultrasonic horn in Fig. 4,

Fig. 5b shows an alternative embodiment of the ultrasonic horn in Fig. 4, and

Fig. 6 shows a view from above of an absorbent article comprising a material web according to the invention.

DESCRIPTION OF EMBODIMENTS

The term material web in the present invention denotes a web comprising one or several layers. For example, a material web can constitute, as described below, a surface layer and a liquid transfer layer in an absorbent article. In addition, a layer can comprise one or several strata.

The term film-like structure denotes a structure comprising melted or softened thermoplastic components. The film-like structure suitably comprises intact fibres, which are bonded together by the melted or softened thermoplastic components and give strength to the welded joints. However, it is also conceivable that all fibres in the film-like structure have been melted. The amount of intact fibres can vary greatly from case to case depending on, for example, which materials are included in the material web, how much energy is applied to the material web in the binding step and how much time the binding step takes.

Fig. 1 shows a material web in the form of a laminate 1 comprising a first fibrous, liquid-permeable material layer 2, which serves as a surface layer

and a second fibrous, liquid-permeable material layer 3, which serves as a liquid transfer layer. The laminate 1 has an extension in one plane and has a longitudinal direction and a transverse direction in said plane as well as a thickness direction perpendicular to the plane. The laminate 1 also has a first and a second surface 8, 11.

The laminate is intended for use as a liquid-permeable surface material in an absorbent article 80 (Fig. 6), where the surface layer 2 is intended to face towards a user of the article 80. The surface layer 2 should therefore have a soft, non-chafing surface facing towards the user and is advantageously produced from a relatively thin nonwoven material.

Nonwoven material can be produced using many different methods, for example by carding or spinning a fibre gauze, which is then bonded. Furthermore, so-called melt-blown technique can be used to deposit short fibres in the form of a fibre web. There are a number of different ways of bonding fibres in a nonwoven material. For example, different types of bonding agent can be used. In addition, heat-meltable components in the material can be used for bonding with ultrasound or by applying heat. Other bonding methods are needling and hydro-entangling. Different bonding methods can also be combined with one another. A particularly common nonwoven material is spunbond nonwoven.

The liquid transfer layer 3, which advantageously has a greater extension in the thickness direction of the laminate 1 than the surface layer 2, can in turn consist of one, two or several strata of different or similar types of material, for example a porous, resilient fibre material. The liquid transfer layer 3 should have the ability to receive large amounts of liquid in a short time, spread the liquid in the plane of the layer, transport the material to an absorbent body arranged under the laminate, and also be able to temporarily store liquid that has not had time to be absorbed by the absorbent body. The following materials are particularly suitable for use in the second layer:

synthetic fibre wadding, carded, bonded or unbonded fibre layers, or bulky nonwoven materials. A special type of fibre material that can be used is known as tow, which is understood to mean mainly parallel, long or endless fibres or fibre filaments, which are arranged in the form of unbonded layers or strands. Another type of suitable material is porous hydrophilic foam materials.

The two layers 2, 3 are mutually connected at a large number of bonds 4, which have been formed by means of a method which is described in more detail below with reference to Fig. 4. At least the surface layer 2, but preferably both layers 2, 3, comprise thermoplastic material. Suitable thermoplastic materials are polyolefines, such as polythethylene and polypropylene, and also polyamides, polyester, and the like. Different types of mono-, bi- and polycomponent fibres can also be used, as can various polymer mixtures. The bonds 4 have been formed by simultaneously compressing and applying energy to the laminate 1, whereupon the thermoplastic material has been caused to soften or melt at the bonds 4. When the thermoplastic material cools, it hardens and serves as a bonding agent for the layers 2, 3 in the laminate 1. Moreover, the compression of the porous structure in the layers 2, 3 creates pairs of mutually opposite recesses 5, 12 in a first and a second surface 8, 11 in the laminate, which recesses 5, 12 give the first and second surfaces 8, 11 a wave-like structure (Fig. 2). The recesses 5, 12 have an extension in the thickness direction 1 of the laminate and are separated by an intermediate wall 13. As can be seen in Fig. 2, the recesses 5 in the first surface 8 have a diminishing cross-sectional area in a direction towards the intermediate wall 13, which provides better liquid transfer properties into the article and also prevents rewetting of the surface layer 2. The recesses 12 in the second surface 11 also have a diminishing cross-sectional area in the direction towards the intermediate wall 13, which results in better distribution of liquid to underlying layers. The recesses 12 also counteract rewetting of the surface layer 2, as liquid in underlying layers must pass the cavity created by the recesses 12 in order to

reach the surface layer 2. Furthermore, the recesses 12 are conducive to good ventilation of the article. The fusing together of the thermoplastic materials gives the intermediate wall 13 a film-like structure, which gives stability to the three-dimensional structure of the laminate 1. However, the film-like structure gives the intermediate wall 13 a more or less liquid-impermeable character, as the liquid-permeability is negatively affected by a higher proportion of melted or softened thermoplastic material. As it is desirable to obtain high liquid-permeability for the laminate, the recesses 5, 12 in each pair are therefore connected via several penetrating holes 9, which thus connect the first surface 8 with the second surface 11. These holes 9 are intended to transport liquid to the underlying layers in the absorbent article. Moreover, the concentrated fibre structure that has arisen around the bonds as a result of the compression which occurs during the joining process, results in the area immediately around each bond 4 having finer capillaries than the surrounding material, which further contributes to increasing the liquid transfer capability from the first to the second layer.

As can be seen from Fig. 1, the laminate 1 has point-like bonds, which form a bonding pattern. However, it should be understood that the bonds 4 and also the recesses 5, 12 at the bonds 4 can have any form. For example, they can have a line-shaped, circular or oval cross-section in the plane of the laminate. In the same way, the penetrating holes 9 can have another form than those shown in Figs. 3a and b; for example, they can have a circular, oval, line-shaped or square cross-section in the plane of the laminate. Moreover, the bonds 4 in Fig. 1 are relatively homogeneously distributed over the laminate. The person skilled in the art would realise that other bonding patterns are conceivable; for example the bonds can be arranged in groups or in bands. By this means, specific characteristics for the liquid-permeability can be achieved; for example bonding patterns that are band-shaped in the longitudinal direction of the laminate counteract liquid distribution perpendicular to these bands. The density of the bonds can also vary between different parts of the laminate, just as the laminate can comprise two

or more different bonding patterns with different bond density and/or bonds with different forms. The bonds can also form patterns which are visually attractive to the user. Similarly, it is possible to divide the laminate into zones, where, for example, one zone has holes with an average cross-sectional area that is greater than the holes in another zone. This is particularly suitable when one part of the laminate is intended to receive low-viscous body fluids, while another part is primarily intended to receive faeces. The laminate can likewise comprise a zone without holes.

As is described in connection with Fig. 5b, it is possible to let only some of the recesses 5, 12 be provided with penetrating holes 9. This is particularly advantageous when it is desirable to obtain high liquid-permeability in only certain parts of the laminate 1, usually the central parts seen in the transverse direction of the laminate.

Fig. 3a shows a view from above of the bottom 6 of a recess 5 in the laminate 1, which bottom 6 constitutes an outer part of the intermediate wall 13 between the recesses 5, 12 in the first and second surfaces 8, 11. It can be seen here that a number of penetrating holes 9 are formed in the intermediate wall 13 in such a way that they form a net. Letting certain parts of the intermediate wall remain in this way not only achieves good liquid-permeability but also stabilises the recesses 5 and gives greater strength to the laminate, which reduces the risk of tearing during the manufacturing process and during use of the completed article. Another advantage of making several small holes 9 in each recess 5 is that the intermediate wall 13 will function as a sieve, which will retain, for example, faeces in the recesses while low-viscous body fluids will be allowed to pass through the holes 9. In a similar way, pulp, fibres and particles, for example superabsorbent particles, are retained inside the article by the intermediate wall 13. This effect has previously been achieved by means of a special intermediate layer, for example a tissue layer, arranged under the liquid-permeable surface layer. With the present invention, such intermediate layers will thus become

superfluous, which gives a product that is simpler and cheaper to produce. As has been mentioned above, the invention is not limited to the cross-sections of the penetrating holes 9 shown here, the penetrating holes being able to have any cross-section in the plane of the laminate, such as circular, elongated or square with rounded corners. It is likewise understood that holes in one and the same recess can have different cross-sectional areas.

An alternative embodiment is shown in Fig. 3b, where only one penetrating hole 10 with a circular cross-section is formed in the intermediate wall 13. This embodiment is advantageous in that it gives good liquid-permeability. This hole 10, too, can have another cross-section than that shown, for example elongated, oval or square with rounded corners, and this hole, too, can be dimensioned to function as a sieve and particle barrier, as described above.

As an example that is in no way limiting, and with the intention of giving an understanding of the dimensions of the laminate, it can be mentioned that the surface layer suitably has a thickness before binding of 0.05 – 0.7 mm and the liquid transfer layer suitably has a thickness before binding of 0.5 – 15 mm. These values are obtained by means of standard test WSP120.6 (05). The method for measuring the thickness of a material web of nonwoven varies depending on the nature of layer. The method for measuring the thickness of a normal layer comprises the steps of applying a sample of the layer onto a reference plate and bringing a pressure plate under a pressure of 0.5 kPa into contact with the layer. The pressure plate has an area of ca 2500 mm^2 and the reference plate suitably has a diameter at least 50 mm greater than the diameter of the pressure plate. After 10 seconds the pressure is measured. The test is carried out on a total of 10 samples and the final thickness represents the mean value of these 10 tests. For bulky layers with a thickness less than 20 mm a device is used which comprises a vertical reference plate with an area of 1000 mm^2 and a vertical pressure plate with an area of 2500 mm^2, between which a sample is suspended, and

a weighted lever, which is attached to the reference plate and applies a force to the reference plate in the direction towards the pressure plate with the purpose of separating two electrical contacts. The weight has a weight of 2.05 ± 0.05 g, which gives a measuring pressure of 0.02 kPa. Prior to measuring, the pressure plate is led in the direction towards the sample until the electrical circuit is closed, which is indicated by a light bulb. After 10 seconds, the thickness of the sample is measured. The process is repeated nine times, after which a mean value of the thickness is calculated. Whether a layer is bulky or not is decided by means of a measuring device of the first type described above, wherein an average value of the thickness for 10 different samples is measured under pressures of 0.1 kPa and 0.5 kPa. If the sample material was compressed less than 20%, the layer is classed as normal, otherwise it is classed as bulky.

In an equally non-limiting way, it can be mentioned that the recesses suitably have a cross-sectional area at the intermediate wall of 0.0039 - 355 mm^2. A solitary penetrating hole formed in a recess advantageously has a cross-sectional area of 0.0039 - 355 mm^2, while the holes in a recess in which several penetrating holes are formed advantageously each have a cross-sectional area of 0.0039 – 40 mm^2. A particularly advantageous size for holes in a material web intended to receive body fluids is 1.57 mm^2. The cross-sectional areas of the holes and the recesses are measured by placing a sample of the material on a light table and then measuring the cross-sectional areas of the recesses and holes in the sample by means of a camera and a computer-generated image. It is suitable to measure 10-20 sizes and calculate a mean value for these.

In the case where the material web is divided into zones of the type described above, where one zone is intended to receive faeces and another zone to receive low-viscous body fluids, it is suitable if the holes in the former zone have a cross-sectional area of 9.5 – 355 mm^2 and the holes in the latter zone have a cross-sectional area of 0.0039 – 8 mm^2. It is of course suitable

to adapt the recesses in a similar way, so that the recesses have in the former zone an average cross-section at the intermediate walls of 9.5 – 355 mm^2 and in the latter zone an average cross-section at the intermediate walls of 0.0039 – 8 mm^2. In the same way, it would be obvious to the person skilled in the art that an article intended primarily to receive body fluids is suitably provided with holes having a cross-sectional area of 0.0039 – 8 mm^2, while an article intended primarily to receive faeces is suitably provided with holes having a cross-sectional area of 9.5 – 355 mm^2.

It should also be pointed out that a material web in accordance with the invention is not limited to comprising a surface layer and a liquid transfer layer but can comprise one or several layers of different types, which in turn can comprise one or several strata displaying different characteristics.

Fig. 4 shows schematically a device 40 for producing a laminate 41 in accordance with the embodiments described above. The device 40 comprises an ultrasound welding arrangement, which in turn comprises a roll 46, to which a first and a second material web 42, 43 are fed, intended to constitute the surface layer and the liquid transfer layer of the laminate, respectively. The layers 42, 43 are each fed from a feeding roll 44, 45 in a transport direction indicated by the arrow A. The roll 46 is provided with a pattern of raised portions corresponding to the bonding and perforation patterns which are to be created by the process and are exemplified in Figs. 3a and 3b. The ultrasound welding equipment further comprises a first and a second station 47, 48 located at the roll 46, which stations 47, 48 comprise a first and a second ultrasonic horn 49, 50, respectively, which are arranged in such a way along the transport direction of the layers 42, 43 that the layers 42, 43 first reach the first horn 49 and then the second horn 50. At the first horn 49 there occurs simultaneous compression and supply of energy to the layers 42, 43, whereupon the thermoplastic material existing in at least one of the layers 42, 43 in the laminate 41 is made to at least partly soften and bond the layers. In this way, a permanent compression or concentration of the

porous structure is achieved, especially at the bonds, which creates recesses in the laminate 41, as has been described above in connection with Figs 1-3. When the two layers 42, 43 have been joined to each other in this way, the laminate 41 is fed forward to the second station 48 for forming penetrating holes in at least some of the recesses. At the perforation stage, the surface on the second ultrasonic horn 50 at the second station 48 that faces towards the laminate is advantageously knurled, in order to obtain good transfer of energy and more efficient perforation with minimal effect on the three-dimensional structure created in the first binding step. The laminate 41 is then guided forward, for example to be provided with further bonding patterns and bonds or to be incorporated into an absorbent article.

Fig. 5a shows how the ultrasonic horns in Fig. 4 are configured and arranged. Note that the second ultrasonic horn 50 has the same extension in the transverse direction of the laminate 41 as the first ultrasonic horn 49, so that penetrating holes are formed at all the bonds. Fig. 5b shows an alternative embodiment of the ultrasonic horns. The second ultrasonic horn 55 has a somewhat smaller extension in the transverse direction of the laminate 41 compared with the first ultrasonic horn 54, whereby a laminate is obtained with penetrating holes only in the recesses that are located within a part 53 that is centrally situated in the transverse direction of the laminate between the lines 57, 58. One of the advantages of an embodiment of this type is the prevention of liquid dispersion perpendicular to the longitudinal direction of the laminate. The embodiment in Fig. 5b is also advantageous when there is a desire to provide the side edges of the laminate with decorative patterns through the creation of bonds, as the bonds do not have to be provided with penetrating holes.

Although the devices in Figs. 4, 5a and 5b only comprise two ultrasonic horns, it would be obvious to the person skilled in the art that further horns could be incorporated in the manufacturing process, either beside the existing horns seen in the transport direction of the laminate, or dispersed

along the said transport direction. Thus, for example, parallel bands of bonds with holes can be achieved, separated by bands comprising recesses without such penetrating holes, and also bands completely lacking bonds can be produced. It is also possible to let the operational areas of the ultrasonic horns overlap each other, so that more than one ultrasonic horn at the first or the second station acts on a certain bond, in order to achieve a desired effect. It would also be obvious to the person skilled in the art that the ultrasonic horns shown in Figs 5a and b can have other extensions in the transverse direction of the laminate than those shown.

It is obvious to the person skilled in the art that other embodiments than those described above are conceivable. For example, the material web can comprise one, or more than two, material layers. It is also possible to form recesses in the material web without creating bonds between different layers. It is also possible to create recesses and holes in a material web using techniques other than ultrasound. For example, the holes and the recesses can be formed using hot calendering, in which case rolls with different extensions in the transverse direction of the material web can be used, in the same way as for the ultrasonic horns in Fig 5b.

Fig. 6 shows an absorbent article 80 in the form of an incontinence protector, which comprises a laminate 81 in accordance with the invention, comprising a liquid-permeable surface layer 82, and a liquid-permeable liquid transfer layer 83. The liquid-permeable surface layer 82 contains, together with a liquid-impermeable surface layer 84, an absorbent body 85. The two surface layers 82, 84 have a somewhat greater extension in the plane than the absorbent body 85 and extend a distance beyond the edges of the absorbent body. The surface layers 82, 84 are mutually joined within the projecting parts 86, for example by gluing or welding with heat or ultrasound.

The absorbent body 85 can be of any conventional type. Examples of commonly occurring absorbent materials are cellulose fluff pulp, tissue

sheets, highly absorbent polymers (so-called superabsorbents), absorbent foam materials, absorbent nonwoven materials and the like. It is common to combine cellulose fluff pulp with superabsorbents in an absorbent body. Absorbent bodies constructed of strata of different materials with different qualities with regard to liquid acquisition capacity, distribution capacity and storage capacity are also common. This is well-known to the person skilled in the art and therefore does not require to be described in detail. The thin absorbent bodies which are common nowadays in, for example, children's diapers and incontinence protectors often consist of a compressed, blended or layered structure of cellulose fluff pulp and superabsorbent.

On the outside of the liquid-impermeable surface layer 84 an attachment means 87 in the form of two longitudinal areas of self-adhesive glue is arranged. The areas of glue 87 are suitably covered before use with a detachable protective layer of paper or plastic film treated with releasing agent, which is not shown in the drawing. In the shown incontinence protector, this attachment means 87 consists of two longitudinal glue areas, however a number of other glue patterns are of course conceivable, as are other types of attachment means, such as hook-and-loop surfaces, press studs, girdles, special underpants, or the like.

An incontinence protector of the type shown in Fig. 6 is primarily intended to be used by persons with relatively slight incontinence problems and can easily be accommodated in a pair of ordinary underpants. The attachment means 87 serves to hold the incontinence protector in place in the underpants during use.

The incontinence protector 80 is hour-glass shaped with broader end portions 88, 89 and a narrower crotch portion 90 situated between the end portions 88, 89. The crotch portion 90 is the part of the incontinence protector 80 that is intended during use to be placed in the user's crotch and to serve as an acquisition surface for the emitted body fluid.

A porous and resilient liquid transfer layer 83, for example a fibrous wadding, a porous foam layer, or one of the other materials that have been indicated as suitable for the second layer in the laminate described above, is arranged between the liquid-permeable surface layer 82 and the absorbent body 85. The liquid transfer layer 83 receives the liquid that passes through the surface layer 82. In the case of urination, relatively large quantities of liquid are often emitted during short periods. Therefore, it is essential that the contact between the liquid-permeable surface area 82 and the liquid transfer layer 83 behind it is such that the liquid penetrates quickly into the liquid transfer layer 83. Due to the fact that the liquid transfer layer 83 is a layer with high bulk and a thickness that is preferably from 0.5 mm – 3 mm, the layer can act as a temporary reservoir for liquid before it is gradually absorbed into the absorbent body 85.

In the shown example, the liquid transfer layer 83 is somewhat narrower than the absorbent body 85, but extends along the entire length of the incontinence protector 80. This type of design is advantageous as it allows a certain saving in material. Naturally, it is possible to make further savings in material by not letting the liquid transfer layer extend along the entire length of the incontinence protector. For example, it is conceivable to only arrange the liquid transfer layer at the crotch portion 90 of the incontinence protector, as the bulk of the body fluid to be absorbed by the incontinence protector can be expected to meet the protector within that portion.

Commonly used liquid transfer layers are often very porous and have a relatively large effective average pore size, which is often greater than the effective average pore size of conventional liquid-permeable surface layer materials. The effective average pore size of a fibrous material can be measured using a measuring method described in EP-A-0 470 392. As liquid, due to capillary action, strives to go from courser to finer capillaries, and not vice versa, liquid tends to remain in the fibre network of the surface material

instead of being drained by the more porous liquid transfer layer. This means that there is a risk of liquid running on the surface of the surface layer and causing leakage. Moreover, liquid remains in the fibre structure of the surface layer, causing the surface of the surface layer to feel wet and uncomfortable to the user.

As described above, the liquid-permeable surface layer 82 and the liquid transfer layer 83 constitute a laminate 81, which comprises recesses with penetrating holes through the laminate. These holes thus lead the body fluid from the surface layer 82 and a first surface of the laminate 81 in a direction towards the absorbent body 85 and a second surface of the laminate 81. Furthermore, as a result of the liquid-permeable surface layer 82 being joined to the liquid transfer layer 83, as described in connection with the laminates described above, the liquid transfer layer is compressed at the bonds 91. Thus, the liquid transfer layer 83 has a density gradient with increasing density in towards each bond 91. The liquid transfer layer 83 will thus have a pore size gradient around the bonds 91 and an area where the effective average pore size is less than the average pore size of the liquid-permeable surface layer 82. Thus, the liquid transfer layer 83 can efficiently drain the surface layer 82 of liquid. As the surface layer 82 is drained of liquid in the area around each bond 91, a liquid deficit will occur in these areas, whereupon a levelling-out of liquid will occur in the surrounding areas. The surface layer 82 will then contain less liquid altogether and will thus feel drier against the skin.

Moreover, the absorbent body 85 should have greater liquid affinity than the liquid transfer layer 83, in order to achieve good liquid transfer between the liquid transfer layer 83 and the absorbent body 85. This can be achieved, for example, by means of the absorbent body 85 having a finer capillary structure than the liquid transfer layer 83 and/or by the liquid transfer layer 83 being less hydrophilic than the absorbent body 85. In the same way, it is advantageous if the liquid transfer layer is more hydrophilic than the surface

layer, thus obtaining a hydrophilic gradient, which gives greater hydrophilicity in a direction from the surface layer towards the absorbent body. Rewetting of the surface layer is thus prevented and good liquid transfer into the absorbent body is ensured. Thus, as the surface layer is advantageously relatively hydrophobic, it is particularly advantageous that the recesses be formed with penetrating holes in order to ensure good liquid transfer from the surface layer to the liquid transfer layer. Hydrophilicity in hydrophobic materials, such as the thermoplastic materials in the laminate, is suitably achieved by means of treatment with surfactants, in a manner known to the person skilled in the art.

As has been mentioned above, it is suitable if the recesses with holes are formed with a number of small holes, as this gives a filter effect which prevents fibres and particles from leaving the article. A separator in the form of an intermediate layer thus becomes unnecessary in such an embodiment.

Obviously, it is possible to use a material web in accordance with the present invention in many different types of absorbent article, such as diapers, sanitary napkins, incontinence protectors, protective bed covers, etc.

Moreover, as mentioned above, a material web in accordance with the invention is not limited to comprising a surface layer and a liquid transfer layer; the material web can comprise several layers of different types. Equally, the material web can comprise only one layer and the layers can, in turn have several different characteristics in different layers. Neither does the material web have to be arranged as shown in Fig. 6, but it can be located anywhere in the absorbent article. The material web can also be arranged in such a way that the first surface is facing away from the user during use of the article, just as it can be facing towards the user.

As mentioned above, the material web can also be divided into zones with holes and recesses of different sizes. The material web can then, for

example, be so arranged in the article that a zone intended to receive faeces is closer to a rear edge of the article, while a zone intended to receive low-viscous body fluids is closer to a forward edge of the article.

The invention should not be considered to be limited to the embodiments described here, a number of further variations and modifications being conceivable within the framework of the following claims, and it is also possible to combine features from different embodiments. One example of such a combination comprises an incontinence protector comprising a material web consisting of only one layer, which layer is divided into a zone with penetrating holes and a zone without penetrating holes. Another example is constituted by a material web comprising three layers, which material web has three zones in which the holes have different cross-sectional areas.

CLAIMS

1. Material web (1; 41; 81) for use in an absorbent article (80), which material web (1; 41; 81) comprises at least one fibrous material layer (2, 3; 42, 43; 82, 83) and has a longitudinal direction, a transverse direction and a thickness direction as well as a first and a second surface (8, 11), which surfaces are situated on opposite sides of the material web and of which one surface (8) is intended to face towards a user of the article (80) while the opposite surface (11) is intended to face away from a user of the article (80), which material web comprises:
recesses (5) in the first surface (8) with an extension in the thickness direction of the material web (1; 41; 81), which recesses (5) have a diminishing cross-sectional area along at least a part of their extension in a direction towards the second surface (11);
characterized in that the material web (1; 41; 81) comprises:
recesses (12) in the second surface (11) with an extension in the thickness direction of the material web (1; 41; 81), which recesses (12) have a diminishing cross-sectional area along at least a part of their extension in a direction towards the first surface (8) and which recesses form pairs with opposite recesses (5) in the first surface (8);
the recesses (5, 12) in at least some of the pairs of recesses (5, 12) being connected to each other via at least one hole (9, 10).

2. Material web in accordance with claim 1, in which the recesses (5, 12) in at least some of the pairs of recesses (5, 12) are connected to each other via several holes (9).

3. Material web (1; 41; 81) in accordance with claim 1 or 2, which material web (1; 41; 81) comprises at least a first and a second fibrous material layer (2, 3; 42, 43; 82, 83), which are bonded together at the recesses (5, 12) by means of an at least partly softened thermoplastic material.

4. Material web in accordance with any one of the preceding claims, which material web has a first and a second zone, where holes within the first zone have an average cross-sectional area that is smaller than the average cross-sectional area for holes within the second zone.

5. Material web (1; 41; 81) in accordance with any one of the previous claims, in which the recesses (5, 12) in most or all of the pairs of recesses (5, 12) are connected via at least one hole (9, 10).

6. Material web (41) in accordance with any one of the previous claims, in which the recesses (5, 12) provided with holes are situated within a part (53) that is situated centrally in the transverse direction of the material web (41).

7. Absorbent article (80) comprising a liquid-permeable surface layer (82), a liquid-impermeable surface layer (84) and an absorbent layer (85) between the two surface layers (82, 84), c h a r a c t e r i z e d i n that at least one layer (82, 84, 85) forming part of the article (80) is in the form of a material web (1; 41; 81) in accordance with one of the preceding claims.

8. Absorbent article (80) in accordance with claim 7, in which the material web (81) comprises said liquid-permeable surface layer (82) and a liquid-permeable liquid transfer layer (83) arranged between the liquid-permeable surface layer (82) and the absorbent layer (85).

9. Absorbent article in accordance with claim 7 or 8, which article, in the longitudinal direction, has a forward transverse edge and a rear transverse edge and in which the material web has a first zone situated closer to the forward edge and a second zone situated closer to the rear edge, in which holes situated within the first zone have an average cross-

sectional area that is smaller than the average cross-sectional area for holes within the second zone.

10. Method for producing an apertured structure in a material web (1; 41; 81) for use in an absorbent article (80), which material web (1; 41; 81) comprises at least one fibrous material layer (2, 3; 42, 43; 82, 83) and has a longitudinal direction, a transverse direction and a thickness direction as well as a first and a second surface (8, 11), which surfaces are situated on opposite sides of the material web (1; 41; 81) and of which one surface (8) is intended to face towards a user of the article (80), while the opposite surface (11) is intended to face away from a user of the article (80),

characterized in that the method comprises:

the first step of forming pairs of mutually opposite recesses (5, 12) in the first and second surfaces (8,11), which recesses (5, 12) have an extension in the thickness direction of the material web (1; 41; 81), the recesses (5) in the first surface (8) being formed with a diminishing cross-sectional area at least along part of their extension in a direction towards the second surface (11) and the recesses (12) in the second surface (11) being formed with a diminishing cross-sectional area at least along part of their extension in a direction towards the first surface (8);

and the second step of forming holes (9,10) in the material web (1; 41; 81), which holes (9, 10) each connect two recesses (5, 12) belonging to a pair.

11. Method in accordance with claim 10, in which the recesses (5, 12) in at least some of the pairs of recesses (5, 12) are connected by means of several holes (9).

12. Method in accordance with any one of claims 10 and 11, in which the recesses (5, 12) are formed by means of hot calendering.

13. Method in accordance with any one of claims 10 and 11, in which the recesses (5, 12) are formed by means of an ultrasonic welding device comprising at least one ultrasonic horn.

14. Method in accordance with any one of claims 10-13, in which the holes (9, 10) are formed by means of hot calendering.

15. Method in accordance with any one of claims 10-13, in which the holes (9, 10) are formed by means of an ultrasonic welding device comprising at least one ultrasonic horn.

16. Method in accordance with any one of claims 10-11, in which said recesses (5, 12) and holes (9, 10) are formed by means of an ultrasonic welding device comprising at least one first ultrasonic horn (49; 54) for obtaining said recesses (5, 12), at least one second ultrasonic horn (50; 55) for obtaining said holes (9, 10) and a roll (46), in which said first and second ultrasonic horns (49, 50; 54, 55) work against said roll (46).

17. Method in accordance with any one claims 10-16, in which the material web (1; 41; 81) comprises at least a first and a second material layer, (2, 3; 42, 43; 82, 83) of which at least one comprises a thermoplastic material, and in which during the forming of the recesses (5, 12) said thermoplastic material is made to at least partly soften and thus bond together the two material layers (2, 3; 42, 43; 82, 83) at the recesses (5, 12).

18. Method in accordance with any one 10-17, in which holes within a first zone of the material web are formed with an average cross-sectional area that is smaller than the average cross-sectional layer for holes within a second zone of the material web.

19. Method in accordance with any one of claims 10-18, in which the holes (9, 10) connect recesses (5, 12) situated within a part (53) that is situated centrally in the transverse direction of the material web (41).

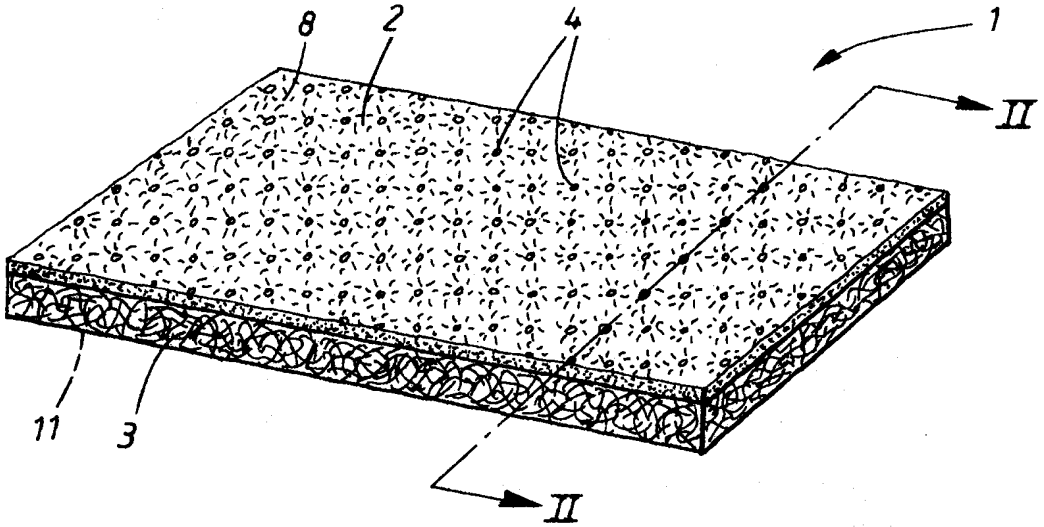

FIG.1

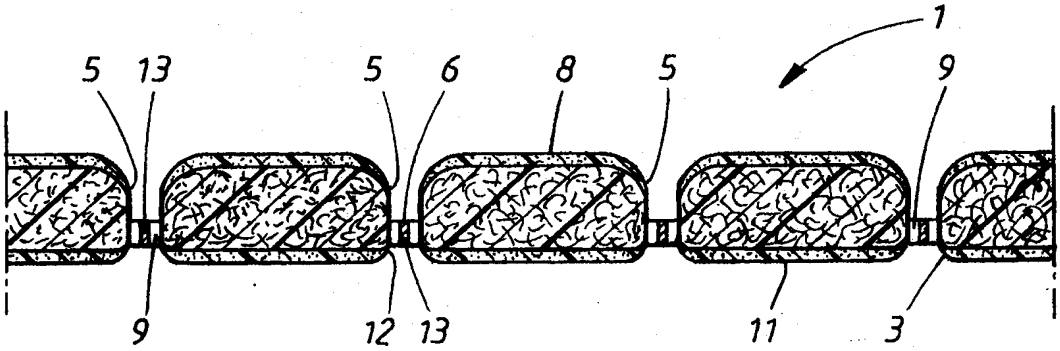

FIG.2

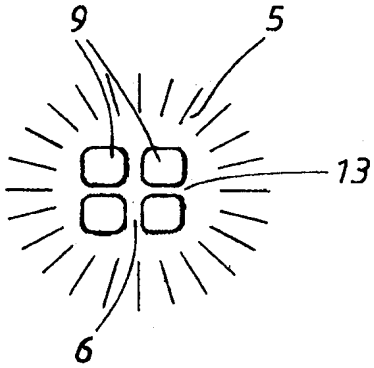

FIG.3a

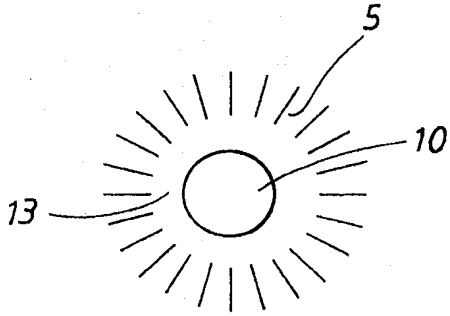

FIG.3b

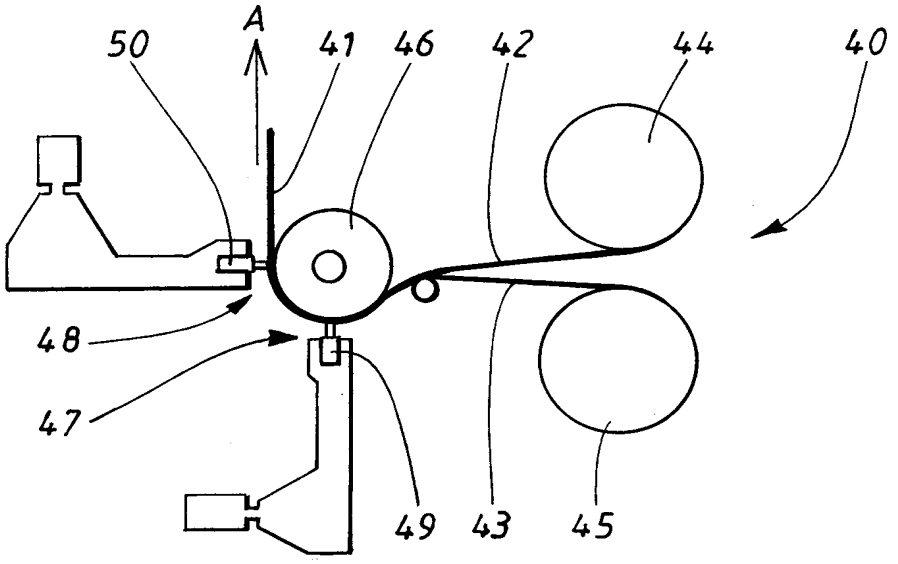

FIG.4

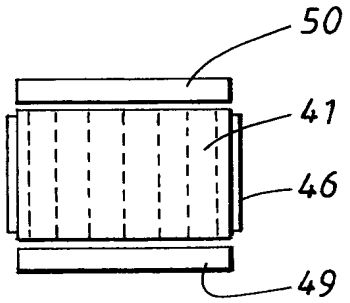

FIG.5a

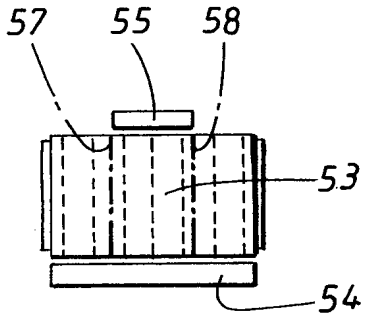

FIG.5b

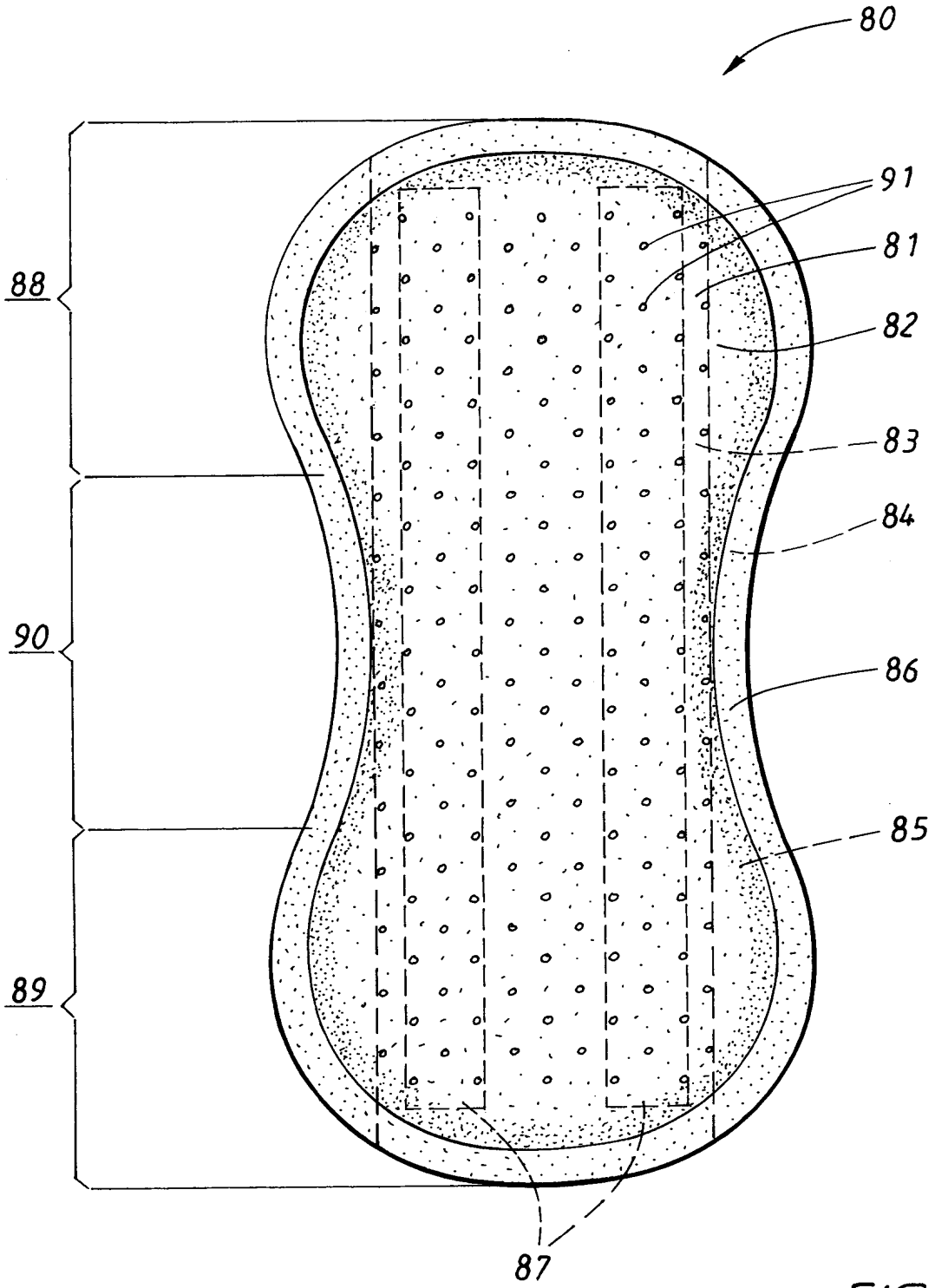

FIG.6

INTERNATIONAL SEARCH REPORT

International application No.
PCT/SE2008/050193

A. CLASSIFICATION OF SUBJECT MATTER

IPC: see extra sheet
According to International Patent Classification (IPC) or to both national classification and IPC

B. FIELDS SEARCHED

Minimum documentation searched (classification system followed by classification symbols)

IPC: A61F, D04H, B32B

Documentation searched other than minimum documentation to the extent that such documents are included in the fields searched

SE,DK,FI,NO classes as above

Electronic data base consulted during the international search (name of data base and, where practicable, search terms used)

EPO-INTERNAL, WPI DATA, PAJ

C. DOCUMENTS CONSIDERED TO BE RELEVANT

Category*	Citation of document, with indication, where appropriate, of the relevant passages	Relevant to claim No.
X	US 20020016122 A1 (CURRO, JOHN JOSEPH ET AL), 7 February 2002 (07.02.2002), figure 5, abstract, paragraphs [0049], [0067]	1-14,16-19
Y	--	15
X	US 5370764 A (ALIKHAN, MIR I.), 6 December 1994 (06.12.1994), column 3, line 47 - line 68, figures 1-2, abstract	1-14,16-19
Y	--	15

[X] Further documents are listed in the continuation of Box C. [X] See patent family annex.

* Special categories of cited documents:
"A" document defining the general state of the art which is not considered to be of particular relevance
"E" earlier application or patent but published on or after the international filing date
"L" document which may throw doubts on priority claim(s) or which is cited to establish the publication date of another citation or other special reason (as specified)
"O" document referring to an oral disclosure, use, exhibition or other means
"P" document published prior to the international filing date but later than the priority date claimed
"T" later document published after the international filing date or priority date and not in conflict with the application but cited to understand the principle or theory underlying the invention
"X" document of particular relevance: the claimed invention cannot be considered novel or cannot be considered to involve an inventive step when the document is taken alone
"Y" document of particular relevance: the claimed invention cannot be considered to involve an inventive step when the document is combined with one or more other such documents, such combination being obvious to a person skilled in the art
"&" document member of the same patent family

Date of the actual completion of the international search	Date of mailing of the international search report
11 November 2008	12-11-2008
Name and mailing address of the ISA/ Swedish Patent Office Box 5055, S-102 42 STOCKHOLM Facsimile No. +46 8 666 02 86	Authorized officer Beate Slusarczyk/Eö Telephone No. +46 8 782 25 00

Form PCT/ISA/210 (second sheet) (July 2008)

INTERNATIONAL SEARCH REPORT

International application No.
PCT/SE2008/050193

C (Continuation). DOCUMENTS CONSIDERED TO BE RELEVANT

Category*	Citation of document, with indication, where appropriate, of the relevant passages	Relevant to claim No.
Y	US 20060243367 A1 (ENGELHART, DARIN ALLEN ET AL), 2 November 2006 (02.11.2006), figure 7, abstract, paragraphs [0094] - [0095]	15
A	--	1-14,16-19
A	US 20020103469 A1 (CHEN, FUNG-JOU ET AL), 1 August 2002 (01.08.2002), figures 14-19, claims 1-9, abstract, column 1, paragraph [0010]; column 3, paragraph [0017]	1-19
	--	
A	US 4342314 A (RADEL, CLIFFORD J. ET AL), 3 August 1982 (03.08.1982), column 4, line 40 - column 5, line 68, figures 11-13,15,19, claims 1,9, abstract	1-19
	--	
A	EP 1095645 A2 (UNI-CHARM CORPORATION), 2 May 2001 (02.05.2001), figures 1-5, abstract, column 3, paragraphs [0011] - [0014]; column 4, paragraph [0018]	1-19
	--	

Form PCT/ISA/210 (continuation of second sheet) (July 2008)

International patent classification (IPC)
A61F 13/512 (2006.01)
B32B 5/22 (2006.01)
D04H 1/54 (2006.01)

Download your patent documents at www.prv.se
The cited patent documents can be downloaded at www.prv.se by following the links:

- In English/Searches and advisory services/Cited documents (service in English) or
- e-tjänster/anförda dokument(service in Swedish).

Use the application number as username.
The password is **FGQLCEDZKA**.

Paper copies can be ordered at a cost of 50 SEK per copy from PRV InterPat (telephone number 08-782 28 85).

Cited literature, if any, will be enclosed in paper form.

US	20020016122	A1	07/02/2002	AU	2586701	A	03/07/2001
				CA	2392695	A,C	28/06/2001
				EP	1244406	A	02/10/2002
				JP	2003517950	T	03/06/2003
				MX	PA02005484	A	29/11/2002
				US	6716498	B	06/04/2004
				US	6730622	B	04/05/2004
				US	6808791	B	26/10/2004
				US	6830800	B	14/12/2004
				US	6863960	B	08/03/2005
				US	6878433	B	12/04/2005
				US	7037569	B	02/05/2006
				US	20020022426	A	21/02/2002
				US	20020022427	A	21/02/2002
				US	20020034912	A	21/03/2002
				US	20020034913	A	21/03/2002
				US	20020039867	A	04/04/2002
				US	20020062974	A	30/05/2002
				US	20020164465	A	07/11/2002
				US	20030028165	A	06/02/2003
				US	20050276956	A	15/12/2005
				AU	2443401	A	03/07/2001
				AU	2586601	A	03/07/2001
				BR	0016327	A	27/08/2002
				BR	0016456	A	20/08/2002
				CA	2393147	A	28/06/2001
				CA	2393149	A	28/06/2001
				CN	1414844	A,T	30/04/2003
				CN	1414845	A,T	30/04/2003
				CZ	20021933	A	13/11/2002
				CZ	20022114	A	12/02/2003
				EP	1242022	A	25/09/2002
				EP	1255521	A	13/11/2002
				JP	2003517882	T	03/06/2003
				JP	2003517949	T	03/06/2003
				MX	PA02006331	A	13/12/2002
				MX	PA02006333	A	13/12/2002
				US	6884494	B	26/04/2005
				US	7220332	B	22/05/2007
				US	20040185736	A	23/09/2004
				WO	0145613	A	28/06/2001
				WO	0145615	A	28/06/2001
				WO	0145616	A	28/06/2001
				CA	2449437	A	03/01/2003
				EP	1397101	A	17/03/2004
				JP	2004532758	T	28/10/2004
				WO	03000165	A	03/01/2003

US	5370764	A	06/12/1994	AU	669571	B	13/06/1996
				AU	5048693	A	19/05/1994
				CA	2088392	A	07/05/1994
				DE	69319996	D,T	15/04/1999
				EP	0596532	A,B	11/05/1994
				ES	2118873	T	01/10/1998
				JP	6158501	A	07/06/1994
				KR	236745	B	02/03/2000
				KR	100236745	B	02/03/2000
				MX	9300425	A	31/05/1994
				PH	31084	A	05/02/1998
				US	5580418	A	03/12/1996
				ZA	9307185	A	26/05/1994
US	20060243367	A1	02/11/2006	AU	2006240526	A	02/11/2006
				CN	101166609	A	23/04/2008
				EP	1890852	A	27/02/2008
				KR	20080007445	A	21/01/2008
				US	7323072	B	29/01/2008
				WO	2006115574	A	02/11/2006
US	20020103469	A1	01/08/2002	US	6911573	B	28/06/2005
				US	6395957	B	28/05/2002
				US	20020099347	A	25/07/2002
				US	20020107495	A	08/08/2002
				AU	738012	B	06/09/2001
				AU	6464698	A	20/10/1998
				AU	6575798	A	20/10/1998
				BR	9808031	A	08/03/2000
				CA	2280018	A	01/10/1998
				DE	69827776	D,T	31/03/2005
				DE	69833280	D,T	10/08/2006
				EP	0969787	A,B	12/01/2000
				EP	1236827	A,B	04/09/2002
				EP	1344511	A	17/09/2003
				JP	2001521590	T	06/11/2001
				TW	410154	B	00/00/0000
				US	5990377	A	23/11/1999
				WO	9842289	A	01/10/1998
				WO	9842290	A	01/10/1998
				ZA	9802342	A	22/09/1998

US	4342314	A	03/08/1982	AT	6604	T	15/03/1984
				AU	541677	B	17/01/1985
				AU	5611480	A	11/09/1980
				BR	8001307	A	04/11/1980
				CA	1140319	A	01/02/1983
				CA	1155274	A	18/10/1983
				DE	3066902	D	00/00/0000
				EP	0018020	A,B	29/10/1980
				SE	0018020	T3	
				ES	250912	U	01/01/1981
				ES	252982	U,Y	01/09/1981
				ES	489159	A	01/04/1981
				ES	8103977	A	01/07/1981
				GR	67004	A	18/05/1981
				HK	99288	A	16/12/1988
				IE	49278	B	04/09/1985
				JP	1735236	C	17/02/1993
				JP	1794258	C	14/10/1993
				JP	1937942	C	09/06/1995
				JP	3184541	A	12/08/1991
				JP	3198850	A	30/08/1991
				JP	4008221	B	14/02/1992
				JP	5000066	B	05/01/1993
				JP	5028626	B	26/04/1993
				JP	55146738	A	15/11/1980
				MX	153289	A	11/09/1986
				US	4508256	A	02/04/1985
EP	1095645	A2	02/05/2001	AU	765968	B	09/10/2003
				AU	6668700	A	03/05/2001
				BR	0005292	A	12/06/2001
				CA	2323758	A,C	29/04/2001
				CN	1213711	C	10/08/2005
				CN	1297724	A	06/06/2001
				ID	27954	A	00/00/0000
				JP	3576052	B	13/10/2004
				JP	2001120596	A	08/05/2001
				KR	20010040196	A	15/05/2001
				SG	92750	A	19/11/2002
				TW	512060	B	00/00/0000
				US	6503598	B	07/01/2003

(12) INTERNATIONAL APPLICATION PUBLISHED UNDER THE PATENT COOPERATION TREATY (PCT)

(19) World Intellectual Property Organization
International Bureau

(43) International Publication Date
3 January 2013 (03.01.2013)

WIPO | PCT

(10) International Publication Number
WO 2013/002686 A1

(51) International Patent Classification:
A61F 13/537 (2006.01) *A61F 13/539* (2006.01)
A61F 13/535 (2006.01)

(21) International Application Number:
PCT/SE2011/050859

(22) International Filing Date:
28 June 2011 (28.06.2011)

(25) Filing Language: English

(26) Publication Language: English

(71) Applicant *(for all designated States except US)*: **SCA HYGIENE PRODUCTS AB** [SE/SE]; S-405 03 Göteborg (SE).

(72) Inventors; and
(75) Inventors/Applicants *(for US only)*: **ANDERSSON, Patrik** [SE/SE]; Hedens Väg 45, S-427 42 Billdal (SE). **BERGSTRÖM, Per** [SE/SE]; Doktor Heymans Gata 1, S-413 22 Göteborg (SE). **LUNDMAN, Malin** [SE/SE]; Näckrosvägen 111, S-435 40 Mölnlycke (SE).

(74) Agent: **Valea AB**; Lindholmspiren 5, S-417 56 Göteborg (SE).

(81) Designated States *(unless otherwise indicated, for every kind of national protection available)*: AE, AG, AL, AM, AO, AT, AU, AZ, BA, BB, BG, BH, BR, BW, BY, BZ, CA, CH, CL, CN, CO, CR, CU, CZ, DE, DK, DM, DO, DZ, EC, EE, EG, ES, FI, GB, GD, GE, GH, GM, GT, HN, HR, HU, ID, IL, IN, IS, JP, KE, KG, KM, KN, KP, KR, KZ, LA, LC, LK, LR, LS, LT, LU, LY, MA, MD, ME, MG, MK, MN, MW, MX, MY, MZ, NA, NG, NI, NO, NZ, OM, PE, PG, PH, PL, PT, RO, RS, RU, SC, SD, SE, SG, SK, SL, SM, ST, SV, SY, TH, TJ, TM, TN, TR, TT, TZ, UA, UG, US, UZ, VC, VN, ZA, ZM, ZW.

(84) Designated States *(unless otherwise indicated, for every kind of regional protection available)*: ARIPO (BW, GH, GM, KE, LR, LS, MW, MZ, NA, SD, SL, SZ, TZ, UG, ZM, ZW), Eurasian (AM, AZ, BY, KG, KZ, MD, RU, TJ, TM), European (AL, AT, BE, BG, CH, CY, CZ, DE, DK, EE, ES, FI, FR, GB, GR, HR, HU, IE, IS, IT, LT, LU, LV, MC, MK, MT, NL, NO, PL, PT, RO, RS, SE, SI, SK, SM,

[Continued on next page]

(54) Title: ABSORBENT ARTICLE HAVING INTAKE STRUCTURE

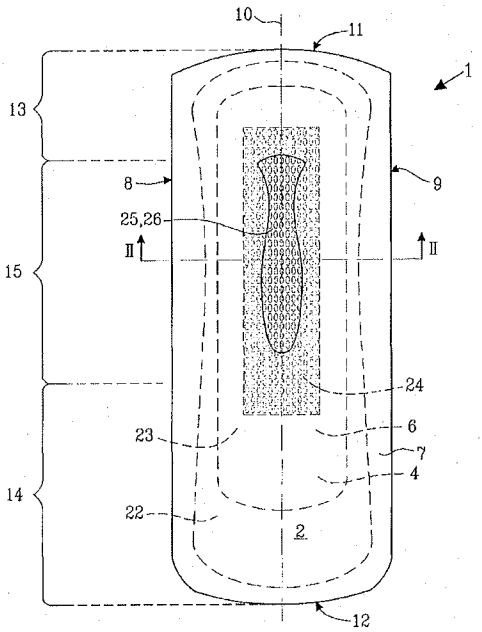

Fig. 1

(57) Abstract: An absorbent article (1) comprising a fluid permeable topsheet (2), a fluid impermeable backsheet (4) and an absorbent core (6) enclosed between the topsheet (2) and the backsheet (4). The absorbent core (6) comprises a first absorbent layer (22) having an opening (25) extending therethrough. A fluid flow control structure (24) is arranged between the first absorbent layer (22) and the backsheet (4). The fluid flow control structure (24) is a layered structure comprising a non-perforated fibrous polymeric layer (31) and a first perforated polymeric layer (32) having a basis weight of from 50 g/m² to100 g/m².

WO 2013/002686 A1

TR), OAPI (BF, BJ, CF, CG, CI, CM, GA, GN, GQ, GW, ML, MR, NE, SN, TD, TG).

Published:

— *with international search report (Art. 21(3))*

PATENT COOPERATION TREATY

From the
INTERNATIONAL PRELIMINARY EXAMINING AUTHORITY

ANKOM
2013 -07- 08
VALEA AB

To:

Valea AB
Lindholmspiren 5
417 56 Göteborg
SUEDE

PCT

WRITTEN OPINION OF THE INTERNATIONAL PRELIMINARY EXAMINING AUTHORITY

(PCT Rule 66)

Date of mailing *(day/month/year)*	05.07.2013
Applicant's or agent's file reference PG18340PC00	**REPLY DUE** within 2 month(s) from the above date of mailing

International application No.	International filing date *(day/month/year)*	Priority date *(day/month/year)*
PCT/SE2011/050859	28.06.2011	

International Patent Classification (IPC) or both national classification and IPC
INV. A61F13/537

Applicant
Sca Hygiene Products AB

1. ☒ The written opinion established by the International Searching Authority:
   ☐ is ☒ is not
   considered to be a written opinion of the International Preliminary Examining Authority.

2. This first opinion contains indications relating to the following items:
   - ☒ Box No. I Basis of the opinion
   - ☐ Box No. II Priority
   - ☐ Box No. III Non-establishment of opinion with regard to novelty, inventive step and industrial applicability
   - ☐ Box No. IV Lack of unity of invention
   - ☒ Box No. V Reasoned statement under Rule 66.2(a)(ii) with regard to novelty, inventive step or industrial applicability; citations and explanations supporting such statement
   - ☐ Box No. VI Certain documents cited
   - ☐ Box No. VII Certain defects in the international application
   - ☐ Box No. VIII Certain observations on the international application

3. The applicant is hereby **invited to reply** to this opinion.

   When? See the time limit indicated above. The applicant may, before the expiration of that time limit, request this Authority to grant an extension, see Rule 66.2(e).
   How? By submitting a written reply, accompanied, where appropriate, by amendments, according to Rule 66.3. For the form and the language of the amendments, see Rules 66.8 and 66.9.
   Also: For the examiner's obligation to consider amendments and/or arguments, see Rule 66.4*bis*. For an informal communication with the examiner, see Rule 66.6. For an additional opportunity to submit amendments, see Rule 66.4.
   If no reply is filed, the international preliminary examination report will be established on the basis of this opinion.

4. The final date by which the international preliminary report on patentability (Chapter II of the PCT) must be established according to Rule 69.2 is:

Name and mailing address of the international preliminary examining authority:	Authorized Officer
European Patent Office D-80298 Munich Tel. +49 89 2399 - 0 Fax: +49 89 2399 - 4465	Elsässer, Ralf Telephone No. +49 89 2399-2581

Box No. I Basis of the opinion

1. With regard to the **language**, this opinion has been established on the basis of:

   ☒ the international application in the language in which it was filed

   ☐ a translation of the international application into ,
   which is the language of a translation furnished for the purposes of:
   - ☐ international search (under Rules 12.3(a) and 23.1(b))
   - ☐ publication of the international application (under Rule 12.4(a))
   - ☐ international preliminary examination (under Rules 55.2(a) and/or 55.3(a) and (b))

2. With regard to the elements of the international application, this opinion has been established on the basis of *(replacement sheets which have been furnished to the receiving Office in response to an invitation under Article 14 are referred to in this opinion as "originally filed")*:

Description, Pages

1-20 as originally filed

Claims, Numbers

1-21 filed with the demand for preliminary international examination

Drawings, Sheets

1-3 as originally filed

☐ a sequence listing - see Supplemental Box Relating to Sequence Listing.

3. ☐ The amendments have resulted in the cancellation of:
   - ☐ the description, pages
   - ☐ the claims, Nos.
   - ☐ the drawings, sheets/figs
   - ☐ the sequence listing *(specify)*:

4. ☐ This opinion has been established as if (some of) the amendments listed below had not been made, since either they are considered to go beyond the disclosure as filed, or they were not accompanied by a letter indicating the basis for the amendments in the application as filed, as indicated in the Supplemental Box (Rules 70.2(c) and (c-bis)):
   - ☐ the description, pages
   - ☐ the claims, Nos.
   - ☐ the drawings, sheets/figs
   - ☐ the sequence listing *(specify)*:

5. ☐ This opinion has been established:
   - ☐ taking into account the rectification of an obvious mistake authorized by or notified to this Authority under Rule 91 (Rule 66.1(d-bis)).
   - ☐ without taking into account the rectification of an obvious mistake authorized by or notified to this Authority under Rule 91 (Rule 66.4bis).

6. ☐ Supplementary international search report(s) from Authority(ies) have been received and taken into account in drawing up this opinion (Rule 45bis.8(b) and (c)).

Box No. V Reasoned statement under Rule 66.2(a)(ii) with regard to novelty, inventive step or industrial applicability; citations and explanations supporting such statement

1. Statement

Novelty (N)	No:	Claims	
Inventive step (IS)	No:	Claims	1-21
Industrial applicability (IA)	No:	Claims	

2. Citations and explanations:

see separate sheet

D1 US 6 241 714 B1 (RAIDEL MARIA ET AL) 5 June 2001 (2001-06-05)

D2 US 2005/267429 A1 (COHEN RICHMOND R) 1 December 2005 (2005-12-01)

D3 EP 1 403 037 A1 (JAPAN ABSORBENT TECH INST) 31 March 2004 (2004-03-31)

D4 WO 2005/084596 A1 (SCA HYGIENE PROD AB ET AL) 15 September 2005 (2005-09-15)

D5 WO 00/59431 A1 (KIMBERLY CLARK CO) 12 October 2000 (2000-10-12)

D6 WO 02/24133 A1 (TREDEGAR FILM PROD CORP) 28 March 2002 (2002-03-28)

D7 WO 2005/079542 A2 (TREDEGAR FILM PROD CORP) 1 September 2005 (2005-09-01)

D8 WO 97/34559 A1 (PROCTER & GAMBLE) 25 September 1997 (1997-09-25)

D9 WO 00/19955 A2 (KIMBERLY CLARK CO) 13 April 2000 (2000-04-13)

D10 WO 97/47263 A1 (PROCTER & GAMBLE) 18 December 1997 (1997-12-18)

D11 US 4 988 344 A (REISING GEORGE S ET AL) 29 January 1991 (1991-01-29)

D12 US 5 957 906 A (ROE DONALD C ET AL) 28 September 1999 (1999-09-28)

D13 FR 2 044 554 A5 (WUHRLIN JEAN) 19 February 1971 (1971-02-19)

D14 WO 01/72251 A1 (KIMBERLY CLARK CO) 4 October 2001 (2001-10-04)

1 **Amendments**

The correction in claim 14 is allowable.

2 **Claim 1**

The applicant has argued the subject matter of claim 1 differed from the disclosure of D1 in three aspects:

- D1 did not disclose a basis weight of the perforated material 28, i.e. of the material the ISA considered to correspond to the first perforated polymeric layer defined in claim 1
- Said layer comprised pulp and was therefore not polymeric
- For undulated layer 26 made of "textile material" there was also no disclosure of this layer being "polymeric"

The examiner does however not agree with the last two points for the following reasons: Although the term "polymeric" was probably intended to be understood to refer to non-absorbent, synthetic thermoplastic polymers (see p.4, l. 10-13; p.5, l.24-25), its scope is much broader as - strictly speaking - wood pulp is also comprised of a "polymeric" material. The same applies to basically all textile materials like cotton, wool, viscose or synthetics.

Hence the examiner agrees with the argumentation of the ISA.

D1 explicitly teaches that the fluid control structure should not absorb liquid but act as a spacer to transfer and spread the liquid further (col.2, l.11 - col.3, l.4). The problem to be solved can merely be formulated as proposing a suitable basis weight fur such a structure, so that these desired properties can be achieved.

It must be concluded that the skilled person would arrive inevitably at the weight range of claim 1.

The applicant should examine whether it is possible to limit the claim in a suitable way, so that pulp is excluded (see e.g. passages cited above).

A claim amended in such a way would appear to meet the requirements of the PCT, as D1 explicitly emphasizes the usefulness of UCTAD-layers comprising pulp. The skilled person would not deviate from this teaching.

From the
INTERNATIONAL PRELIMINARY EXAMINING AUTHORITY

ANKOM
2012 -09- 24
VALEA AB

PCT

To:

Valea AB
Lindholmspiren 5
417 56 Göteborg
SUEDE

NOTIFICATION OF TRANSMITTAL OF THE INTERNATIONAL PRELIMINARY REPORT ON PATENTABILITY

(PCT Rule 71.1)

Date of mailing *(day/month/year)*	25.09.2013
Applicant's or agent's file reference PG18340PC00	**IMPORTANT NOTIFICATION**

International application No.	International filing date *(day/month/year)*	Priority date *(day/month/year)*
PCT/SE2011/050859	28.06.2011	

Applicant
Sca Hygiene Products AB

1. The applicant is hereby notified that this International Preliminary Examining Authority transmits herewith the international preliminary report on patentability and its annexes, if any, established on the international application.

2. A copy of the report and its annexes, if any, is being transmitted to the International Bureau for communication to all the elected Offices.

3. Where required by any of the elected Offices, the International Bureau will prepare an English translation of the report (but not of any annexes) and will transmit such translation to those Offices.

4. **REMINDER**

The applicant must enter the national phase before each elected Office by performing certain acts (filing translations and paying national fees) within 30 months from the priority date (or later in some Offices) (Article 39(1)) (see also the reminder sent by the International Bureau with Form PCT/IB/301).

Where a translation of the international application must be furnished to an elected Office, that translation must contain a translation of any annexes to the international preliminary report on patentability. It is the applicant's responsibility to prepare and furnish such translation directly to each elected Office concerned.

For further details on the applicable time limits and requirements of the elected Offices, see Volume II of the PCT Applicant's Guide.

The applicant's attention is drawn to Article 33(5), which provides that the criteria of novelty, inventive step and industrial applicability described in Article 33(2) to (4) merely serve the purposes of international preliminary examination and that "any Contracting State may apply additional or different criteria for the purposes of deciding whether, in that State, the claimed inventions is patentable or not" (see also Article 27(5)). Such additional criteria may relate, for example, to exemptions from patentability, requirements for enabling disclosure, clarity and support for the claims.

Name and mailing address of the international preliminary examining authority:	Authorized Officer
European Patent Office D-80298 Munich Tel. +49 89 2399 - 0 Fax: +49 89 2399 - 4465	Zurkinden, Jolanda Tel. +49 89 2399-4668

PCT

INTERNATIONAL PRELIMINARY REPORT ON PATENTABILITY

(Chapter II of the Patent Cooperation Treaty)

(PCT Article 36 and Rule 70)

Applicant's or agent's file reference PG18340PC00	**FOR FURTHER ACTION**	See Form PCT/IPEA/416
International application No. PCT/SE2011/050859	International filing date *(day/month/year)* 28.06.2011	Priority date *(day/month/year)*
International Patent Classification (IPC) or national classification and IPC INV. A61F13/537		
Applicant Sca Hygiene Products AB		

1. This report is the international preliminary examination report, established by this International Preliminary Examining Authority under Article 35 and transmitted to the applicant according to Article 36.
2. This REPORT consists of a total of 5 sheets, including this cover sheet.
3. This report is also accompanied by ANNEXES, comprising:
   a. ☒ *(sent to the applicant and to the International Bureau)* a total of 4 sheets, as follows:
      - ☒ sheets of the description, claims and/or drawings which have been amended and/or sheets containing rectifications authorized by this Authority, unless those sheets were superseded or cancelled, and any accompanying letters (see Rules 46.5, 66.8, 70.16, 91.2, and Section 607 of the Administrative Instructions).
      - ☐ sheets containing rectifications, where the decision was made by this Authority not to take them into account because they were not authorized by or notified to this Authority at the time when this Authority began to draw up this report, and any accompanying letters (Rules 66.4bis, 70.2(e), 70.16 and 91.2).
      - ☐ superseded sheets and any accompanying letters, where this Authority either considers that the superseding sheets contain an amendment that goes beyond the disclosure in the international application as filed, or the superseding sheets were not accompanied by a letter indicating the basis for the amendments in the application as filed, as indicated in item 4 of Box No. I and the Supplemental Box (see Rule 70.16(b)).

   b. ☐ *(sent to the International Bureau only)* a total of (indicate type and number of electronic carrier(s)) , containing a sequence listing, in electronic form only, as indicated in the Supplemental Box Relating to Sequence Listing (see paragraph 3*bis* of Annex C of the Administrative Instructions).

4. This report contains indications relating to the following items:

☒	Box No. I	Basis of the report
☐	Box No. II	Priority
☐	Box No. III	Non-establishment of opinion with regard to novelty, inventive step and industrial applicability
☐	Box No. IV	Lack of unity of invention
☒	Box No. V	Reasoned statement under Article 35(2) with regard to novelty, inventive step or industrial applicability; citations and explanations supporting such statement
☐	Box No. VI	Certain documents cited
☐	Box No. VII	Certain defects in the international application
☐	Box No. VIII	Certain observations on the international application

Date of submission of the demand	Date of completion of this report
31.01.2013	25.09.2013
Name and mailing address of the international preliminary examining authority: European Patent Office D-80298 Munich Tel. +49 89 2399 - 0 Fax: +49 89 2399 - 4465	Authorized officer Elsässer, Ralf Telephone No. +49 89 2399-2581

Box No. I Basis of the report

1. With regard to the **language**, this report is based on

   ☒ the international application in the language in which it was filed

   ☐ a translation of the international application into , which is the language of a translation furnished for the purposes of:

   ☐ international search (under Rules 12.3(a) and 23.1(b))
   ☐ publication of the international application (under Rule 12.4(a))
   ☐ international preliminary examination (under Rules 55.2(a) and/or 55.3(a) and (b))

2. With regard to the **elements*** of the international application, this report is based on *(replacement sheets which have been furnished to the receiving Office in response to an invitation under Article 14 are referred to in this report as "originally filed" and are not annexed to this report)*:

Description, Pages

1-20 as published

Claims, Numbers

1-21 filed with telefax on 14-08-2013

Drawings, Sheets

1-3 as published

☐ a sequence listing - see Supplemental Box Relating to Sequence Listing.

3. ☐ The amendments have resulted in the cancellation of:

   ☐ the description, pages
   ☐ the claims, Nos.
   ☐ the drawings, sheets/figs
   ☐ the sequence listing *(specify)*:
   ☐ any table(s) related to sequence listing *(specify)*:

4. ☐ This report has been established as if (some of) the amendments annexed to this report and listed below had not been made, since either they are considered to go beyond the disclosure as filed, or they were not accompanied by a letter indicating the basis for the amendments in the application as filed, as indicated in the Supplemental Box (Rules 70.2(c) and (c-bis)):

   ☐ the description, pages
   ☐ the claims, Nos.
   ☐ the drawings, sheets/figs
   ☐ the sequence listing *(specify)*:

5. ☐ This report has been established:

   ☐ taking into account the rectification of an obvious mistake authorized by or notified to this Authority under Rule 91 (Rules 66.1(d-bis) and 70.2(e)).

   ☐ without taking into account the rectification of an obvious mistake authorized by or notified to this Authority under Rule 91(Rules 66.4bis and 70.2(e)).

6. ☐ Supplementary international search report(s) from Authority(ies) has/have been received and taken into account in establishing this report (Rule 45bis.8(b) and (c)).

Box No. V Reasoned statement under Article 35(2) with regard to novelty, inventive step or industrial applicability; citations and explanations supporting such statement

1. Statement

Novelty (N)	Yes:	Claims	1-21
	No:	Claims	
Inventive step (IS)	Yes:	Claims	1-21
	No:	Claims	
Industrial applicability (IA)	Yes:	Claims	1-21
	No:	Claims	

2. Citations and explanations (Rule 70.7):

see separate sheet

Re Item V

Reasoned statement with regard to novelty, inventive step or industrial applicability; citations and explanations supporting such statement

D1 US 6 241 714 B1 (RAIDEL MARIA ET AL) 5 June 2001 (2001-06-05)

D2 US 2005/267429 A1 (COHEN RICHMOND R) 1 December 2005 (2005-12-01)

D3 EP 1 403 037 A1 (JAPAN ABSORBENT TECH INST) 31 March 2004 (2004-03-31)

D4 WO 2005/084596 A1 (SCA HYGIENE PROD AB ET AL) 15 September 2005 (2005-09-15)

D5 WO 00/59431 A1 (KIMBERLY CLARK CO) 12 October 2000 (2000-10-12)

D6 WO 02/24133 A1 (TREDEGAR FILM PROD CORP) 28 March 2002 (2002-03-28)

D7 WO 2005/079542 A2 (TREDEGAR FILM PROD CORP) 1 September 2005 (2005-09-01)

D8 WO 97/34559 A1 (PROCTER & GAMBLE) 25 September 1997 (1997-09-25)

D9 WO 00/19955 A2 (KIMBERLY CLARK CO) 13 April 2000 (2000-04-13)

D10 WO 97/47263 A1 (PROCTER & GAMBLE) 18 December 1997 (1997-12-18)

D11 US 4 988 344 A (REISING GEORGE S ET AL) 29 January 1991 (1991-01-29)

D12 US 5 957 906 A (ROE DONALD C ET AL) 28 September 1999 (1999-09-28)

D13 FR 2 044 554 A5 (WUHRLIN JEAN) 19 February 1971 (1971-02-19)

D14 WO 01/72251 A1 (KIMBERLY CLARK CO) 4 October 2001 (2001-10-04)

1 **Amendments (Art. 34(2)(b) PCT)**

The incorporation of the basis weight range into claim 1 is supported by p.4, l. 10-12.

2 **Novelty and inventive step (Art. 33(2) and (3) PCT)**

D1 is regarded as being the prior art closest to the subject-matter of claim 1 because the absorbent articles disclosed therein are structurally similar to the claimed subject matter and the underlying problem of D1 and the present application is at least similar.

D1 discloses most of the features of claim 1. With regards to the feature *"first perforated polymeric layer wherein the polymers in the first perforated polymeric layer are selected from polyolefins, polyesters, polyamides and blends and combinations thereof, said layer having a basis weight in the range of 50-150 g/m^2*, D1 discloses an "additional strip" (28), having apertures (30) (figures, col.2, l.44 - col.3, l.17; col. 3, l.67 - col.4, l.5; col. 6, l.41-67).

D1 does not disclose a basis weight. Regarding the composition, D1 teaches that pulp-containing materials are "superbly well suited" for the additional strip.

Starting form D1, the provision of an absorbent article having a polymeric perforated layer having the claimed basis weight can be seen as alternative the article known from D1.

Nothing in D1 nor in any of the other documents points towards the solution to this problem defined in claim 1.

Inventive step has to be acknowledged. Claims 2-21 are dependent on claim 1 and as such also meet the requirements of the PCT with respect to novelty and inventive step.

3 **Industrial Applicability (Art. 33(4) PCT)**

The industrial applicability of the claimed subject matter appears to be evident. Thus the requirements of Art.33(4) are fulfilled.

Form PCT/Separate Sheet/409 (Sheet 2) (EPO-April 2005)

valea
TECHNOLOGY & LAW

European Patent Office
D-80298 München
Germany

Göteborg: August 14, 2013
Our ref: PG18340PC00

TO THE INTERNATIONAL PRELIMINARY EXAMINING AUTHORITY

Re: International PCT Application No. PCT/SE2011/050859
Applicant: SCA Hygiene Products AB

Dear Sirs,

This is in response to the Written Opinion dated July 5, 2012.

Please find enclosed an amended set of claims, wherein claim 1 has been delimited to polymers selected from polyolefins, polyesters, polyamides and blends and combinations of such polymers. The basis for such an amendment is found on p. 4, lines 10-13. The Examiner has indicated that such an amendment would result in claim 1 that meets the requirements of the PCT, as D1 explicitly emphasizes the usefulness of UCTAD-layers comprising pulp. The skilled person would not deviate from this teaching.

The Applicant asserts that the invention according to the amended claims is novel and inventive, and thus respectfully requests a positive International Preliminary Examination Report to be issued.

Yours faithfully,

Valea AB (Association No. 258)

Anette Romare

Encl. Amended claims

Valea AB, providing intellectual property consulting services since 1994.

Our offices are located in Gothenburg, Linköping, Lund, Malmö and Stockholm.

Valea AB Lindholmspiren 5, SE-417 56 Gothenburg, Sweden Phone +46 31 50 77 00, Fax +46 31 779 06 40
got@valea.se www.valea.se VAT No SE556103783901 Postal Giro 41183-5 Bank Giro 111-1665

Duration: 14.08.2013 15:19:44 - 14.08.2013 15:21:06. This page 2 of 8 was completed at 14.08.2013 15:20:03
Received at the EPO on Aug 14, 2013 15:21:06. Page 2 of 8
1 / 1
14-08-2013

AMENDED CLAIMS (CLEAN)

1. An absorbent article (1) having a longitudinal direction and a transverse direction, side edges (8,9) extending in the longitudinal direction and end edges (11,12) extending in the transverse direction and comprising a fluid permeable topsheet (2), a fluid impermeable backsheet (4) and an absorbent core (6) enclosed between said topsheet (2) and said backsheet (4), said absorbent core (6) comprising a first absorbent layer (22) having an opening (25) extending therethrough, **characterized in that** a fluid flow control structure (24) is arranged between said first absorbent layer (22) and said backsheet (4), said fluid flow control structure (24) being a layered structure comprising a non-perforated fibrous polymeric layer (31) and a first perforated polymeric layer (32) wherein the polymers in the first perforated polymeric layer (32) are selected from polyolefins, polyesters, polyamides and blends and combinations thereof, said first perforated polymeric layer (32) having a basis weight of from 50 g/m^2 to150 g/m^2.

2. An absorbent article according to claim 1, wherein the first perforated polymeric layer (32) has a basis weight of from 60 g/m^2 to 100 g/m^2.

3. An absorbent article according to claim 1 or 2, wherein said first perforated polymeric layer (32) is a nonwoven, a film or a film/nonwoven laminate, said first perforated polymeric layer (32) preferably being a nonwoven material.

4. An absorbent article according to claim 1, 2 or 3, wherein said first perforated polymeric layer (32) is a three-dimensionally formed layer having penetrating apertures (34), the apertures (34) preferably being funnel-shaped and extending from a first surface (32') of said layer towards a second surface (32") of said layer and forming protrusions (35) on said second surface (32").

5. An absorbent article according to claim 4, wherein said first perforated polymeric layer (32) is arranged with said second surface (32") facing said non-perforated fibrous polymeric layer (31).

6. An absorbent article according to claim 4, wherein said first perforated polymeric layer (32) is arranged with said second surface (32") facing away from said non-perforated fibrous polymeric layer (31).

Duration: 14.08.2013 15:19:44 - 14.08.2013 15:21:06. This page 6 of 8 was completed at 14.08.2013 15:20:46
Received at the EPO on Aug 14, 2013 15:21:06. Page 6 of 8

7. An absorbent article according to any one of the preceding claims, wherein the average size of the apertures (34) in said first perforated polymeric layer (32) is 0.5 - 5 mm.

8. An absorbent article according to any one of the preceding claims, wherein the open area of said first perforated polymeric layer (32) is 5-30%, preferably 10-25%.

9. An absorbent article according to any one of the preceding claims, wherein said fluid flow control structure (24) is a three-layer structure consisting of said non-perforated fibrous polymeric layer (31), said first perforated polymeric layer (32) and a second perforated polymeric layer (33), said non-perforated fibrous polymeric layer (31) being sandwiched between said first perforated polymeric layer (32) and said second perforated polymeric layer (33).

10. An absorbent article according to claim 9, wherein said apertures (34) in said first and said second perforated polymeric layers (32,33) are out of register with each other.

11. An absorbent article according to claim 9 or 10, wherein said second perforated polymeric layer (33) has a basis weight of from 50 g/m^2 to 150 g/m^2, preferably a basis weight of from 60 g/m^2 to 100 g/m^2.

12. An absorbent article according to claim 9, 10 or 11, wherein said second perforated polymeric layer (33) is a three-dimensionally formed layer having apertures (34) extending from a first surface (33') of said layer towards a second surface (33") of said layer and forming protrusions (35) on said second surface (33").

13. An absorbent article according to claim 12, wherein said second perforated polymeric layer (33) is arranged with said second surface (33") facing said non-perforated fibrous polymeric layer (31).

14. An absorbent article according to claim 12, wherein said second perforated polymeric layer (33) is arranged with said second surface (33") facing away from said non-perforated fibrous polymeric layer (31).

15. An absorbent article according to any one of claims 9-14, wherein the average size of the apertures (34) in said second perforated polymeric layer (33) is 0.5 - 5 mm.

Duration: 14.08.2013 15:19:44 - 14.08.2013 15:21:06. This page 7 of 8 was completed at 14.08.2013 15:20:57
Received at the EPO on Aug 14, 2013 15:21:06. Page 7 of 8

16. An absorbent article according to any one of claims 9-15, wherein the open area of the second perforated polymeric layer (33) is 5-30%, preferably 10-25%.

17. An absorbent article according to any one of the preceding claims, wherein said second perforated polymeric layer (33) is a nonwoven, a film or a film/nonwoven laminate, said second perforated polymeric layer (33) preferably being a nonwoven material.

18. An absorbent article according to any one of the preceding claims, wherein a second absorbent layer (23) is arranged between said fluid flow control structure (24) and said backsheet (4).

19. An absorbent article according to any one of the preceding claims, wherein the thickness of the flow control structure (24) at 5 kPa is 60-80% of the thickness at 0.5 KPa at a first , second and third compression performed according to the compression test disclosed herein.

20. An absorbent article according to any one of the preceding claims, wherein the bending stiffness of the laminate material in said fluid flow control structure is 0.5 -5 N, preferably 1-4 N, as measured by the modified ASTM D 4032-82 CIRCULAR BEND PROCEDURE.

21. An absorbent article according to any one of the preceding claims, wherein the basis weight of non-perforated fibrous polymeric layer (31) is from 20-120 gsm, preferably from 60-100 gsm.

uration: 14.08.2013 15:19:44 - 14.08.2013 15:21:06. This page 8 of 8 was completed at 14.08.2013 15:21:06
Received at the EPO on Aug 14, 2013 15:21:06. Page 8 of 8
3/3
14-08-2013

PATENT COOPERATION TREATY

From the INTERNATIONAL SEARCHING AUTHORITY

To:
Valea AB
Lindholmspiren 5
417 56 Göteborg

ANKOM
2012 -02- 22
VALEA AB

PCT

NOTIFICATION OF TRANSMITTAL OF THE INTERNATIONAL SEARCH REPORT AND THE WRITTEN OPINION OF THE INTERNATIONAL SEARCHING AUTHORITY, OR THE DECLARATION

(PCT Rule 44.1)

	Date of mailing *(day/month/year)* 21-02-2012
Applicant's or agent's file reference PG18340PC00	**FOR FURTHER ACTION** See paragraphs 1 and 4 below
International application No. PCT/SE2011/050859	International filing date *(day/month/year)* 28-06-2011
Applicant SCA HYGIENE PRODUCTS AB et al	21/4-12

1. ☒ The applicant is hereby notified that the international search report and the written opinion of the International Searching Authority have been established and are transmitted herewith.

   Filing of amendments and statements under Article 19:
   The applicant is entitled, if he so wishes, to amend the claims of the international application (see Rule 46):

   When? The time limit for filing such amendments is normally two months from the date of transmittal of the international search report.

   Where? Directly to the International Bureau of WIPO, 34 chemin des Colombettes 1211 Geneva 20, Switzerland, Facsimile No.: +41 22 338 82 70

   For more detailed instructions, see *PCT Applicant's Guide*, International Phase, paragraphs 9.004 – 9.011.

2. ☐ The applicant is hereby notified that no international search report will be established and that the declaration under Article 17(2)(a) to that effect and the written opinion of the International Searching Authority are transmitted herewith.

3. ☐ **With regard to any protest** against payment of (an) additional fee(s) under Rule 40.2, the applicant is notified that:

   ☐ the protest together with the decision thereon has been transmitted to the International Bureau together with any request to forward the texts of both the protest and the decision thereon to the designated Offices.

   ☐ no decision has been made yet on the protest; the applicant will be notified as soon as a decision is made.

4. **Reminders**

   The applicant may submit comments on an informal basis on the written opinion of the International Searching Authority to the International Bureau. The International Bureau will send a copy of such comments to all designated Offices unless an international preliminary examination report has been or is to be established. Following the expiration of 30 months from the priority date, these comments will also be made available to the public.

   Shortly after the expiration of **18 months** from the priority date, the international application will be published by the International Bureau. If the applicant wishes to avoid or postpone publication, a notice of withdrawal of the international application, or of the priority claim, must reach the International Bureau before the completion of the technical preparations for international publication (Rules 90*bis*.1 and 90*bis*.3).

   Within **19 months** from the priority date, but only in respect of some designated Offices, a demand for international preliminary examination must be filed if the applicant wishes to postpone the entry into the national phase **until 30 months** from the priority date (in some Offices even later); otherwise, the applicant must, **within 20 months** from the priority date, perform the prescribed acts for entry into the national phase before those designated Offices.

   In respect of other designated Offices, the time limit of **30 months** (or later) will apply even if no demand is filed within 19 months.

   For details about the applicable time limits, Office by Office, see www.wipo.int/pct/en/texts/time_limits.html and the *PCT Applicant's Guide*, National Chapters.

Name and mailing address of the ISA/SE Patent- och registreringsverket Box 5055 S-102 42 STOCKHOLM Facsimile No. + 46 8 666 02 86	Authorized officer Marie Gysell Telephone No. + 46 8 782 25 00

Form PCT/ISA/220 (July 2010)

PATENT COOPERATION TREATY

PCT

INTERNATIONAL SEARCH REPORT

(PCT Article 18 and Rules 43 and 44)

Applicant's or agent's file reference PG18340PC00	FOR FURTHER ACTION	see Form PCT/ISA/220 as well as, where applicable, item 5 below.
International application No. PCT/SE2011/050859	International filing date *(day/month/year)* 28-06-2011	(Earliest) Priority Date *(day/month/year)*
Applicant SCA HYGIENE PRODUCTS AB et al		

This international search report has been prepared by this International Searching Authority and is transmitted to the applicant according to Article 18. A copy is being transmitted to the International Bureau.

This international search report consists of a total of 5 sheets.

☐ It is also accompanied by a copy of each prior art document cited in this report.

1. **Basis of the report**
   a. With regard to the **language**, the international search was carried out on the basis of:
      ☒ the international application in the language in which it was filed.
      ☐ a translation of the international application into _____ which is the language of a translation furnished for the purposes of international search (Rules 12.3(a) and 23.1(b)).
   b. ☐ This international search report has been established taking into account the **rectification of an obvious mistake** authorized by or notified to this Authority under Rule 91 (Rule 43.6*bis*(a)).
   c. ☐ With regard to any **nucleotide and/or amino acid sequence** disclosed in the international application, see Box No. I.
2. ☐ **Certain claims were found unsearchable** (See Box No. II).
3. ☐ **Unity of invention is lacking** (See Box No. III).
4. With regard to the **title**,
   ☒ the text is approved as submitted by the applicant.
   ☐ the text has been established by this Authority to read as follows:
5. With regard to the **abstract**,
   ☒ the text is approved as submitted by the applicant.
   ☐ the text has been established, according to Rule 38.2, by this Authority as it appears in Box No. IV. The applicant may, within one month from the date of mailing of this international search report, submit comments to this Authority.
6. With regard to the **drawings**,
   a. the figure of the **drawings** to be published with the abstract is Figure No. 1
      ☒ as suggested by the applicant.
      ☐ as selected by this Authority, because the applicant failed to suggest a figure.
      ☐ as selected by this Authority, because this figure better characterizes the invention.
   b. ☐ none of the figures is to be published with the abstract.

INTERNATIONAL SEARCH REPORT

International application No.
PCT/SE2011/050859

A. CLASSIFICATION OF SUBJECT MATTER

IPC: see extra sheet

According to International Patent Classification (IPC) or to both national classification and IPC

B. FIELDS SEARCHED

Minimum documentation searched (classification system followed by classification symbols)

IPC: A61F

Documentation searched other than minimum documentation to the extent that such documents are included in the fields searched

SE, DK, FI, NO classes as above

Electronic data base consulted during the international search (name of data base and, where practicable, search terms used)

EPO-Internal, PAJ, WPI data

C. DOCUMENTS CONSIDERED TO BE RELEVANT

Category*	Citation of document, with indication, where appropriate, of the relevant passages	Relevant to claim No.
X	US 6241714 B1 (RAIDEL MARIA ET AL), 5 June 2001 (2001-06-05); abstract; column 7, line 1 - line 19; column 9, line 19 - line 50; figures 1-11	1-8, 11-21
Y	--	9-10
A	US 20050267429 A1 (COHEN RICHMOND R), 1 December 2005 (2005-12-01); abstract; figure 1; claim 8 --	1-21
A	EP 1403037 A1 (JAPAN ABSORBENT TECH INST), 31 March 2004 (2004-03-31); abstract; figures 3,4,8; [0026] --	1-21

☒ Further documents are listed in the continuation of Box C. ☒ See patent family annex.

* Special categories of cited documents:

"A" document defining the general state of the art which is not considered to be of particular relevance

"E" earlier application or patent but published on or after the international filing date

"L" document which may throw doubts on priority claim(s) or which is cited to establish the publication date of another citation or other special reason (as specified)

"O" document referring to an oral disclosure, use, exhibition or other means

"P" document published prior to the international filing date but later than the priority date claimed

"T" later document published after the international filing date or priority date and not in conflict with the application but cited to understand the principle or theory underlying the invention

"X" document of particular relevance; the claimed invention cannot be considered novel or cannot be considered to involve an inventive step when the document is taken alone

"Y" document of particular relevance; the claimed invention cannot be considered to involve an inventive step when the document is combined with one or more other such documents, such combination being obvious to a person skilled in the art

"&" document member of the same patent family

Date of the actual completion of the international search	Date of mailing of the international search report
08-02-2012	21-02-2012
Name and mailing address of the ISA/SE Patent- och registreringsverket Box 5055 S-102 42 STOCKHOLM Facsimile No. + 46 8 666 02 86	Authorized officer Monika Bohlin Telephone No. + 46 8 782 25 00

Form PCT/ISA/210 (second sheet) (July 2009)

INTERNATIONAL SEARCH REPORT

International application No.
PCT/SE2011/050859

C (Continuation). DOCUMENTS CONSIDERED TO BE RELEVANT

Category*	Citation of document, with indication, where appropriate, of the relevant passages	Relevant to claim No.
Y	WO 2005084596 A1 (SCA HYGIENE PROD AB ET AL), 15 September 2005 (2005-09-15); abstract; page 1, line 29 - page 2, line 2; page 14, line 8 - line 31; page 17, line 4 - line 12; figures 2-7 --	9-10
A	WO 0059431 A1 (KIMBERLY CLARK CO), 12 October 2000 (2000-10-12); abstract; page 24, line 14 - page 25, line 8; figures 7,10 --	1-21
A	WO 0224133 A1 (TREDEGAR FILM PROD CORP), 28 March 2002 (2002-03-28); abstract; figures 1-12 --	1-21
A	WO 2005079542 A2 (TREDEGAR FILM PROD CORP), 1 September 2005 (2005-09-01); abstract; figures 1-5 --	1-21
A	WO 9734559 A1 (PROCTER & GAMBLE), 25 September 1997 (1997-09-25); abstract; page 31, line 1 - line 5; page 35, line 20 - page 36, line 2; figure 5 --	1-21
A	WO 0019955 A2 (KIMBERLY CLARK CO), 13 April 2000 (2000-04-13); abstract; figures 1-3; claims 1-8 --	1-21
A	WO 9747263 A1 (PROCTER & GAMBLE), 18 December 1997 (1997-12-18); abstract; page 20, line 6 - line 20; figures 2,6 --	1-21
A	US 4988344 A (REISING GEORGE S ET AL), 29 January 1991 (1991-01-29); abstract; figure 3 --	1-21
A	US 5957906 A (ROE DONALD C ET AL), 28 September 1999 (1999-09-28); abstract; figure 6A --	1-21
A	FR 2044554 A (WUHRLIN JEAN), 19 February 1971 (1971-02-19); figure 2; claims 1-4 --	1-21

INTERNATIONAL SEARCH REPORT

International application No.
PCT/SE2011/050859

C (Continuation). DOCUMENTS CONSIDERED TO BE RELEVANT

Category*	Citation of document, with indication, where appropriate, of the relevant passages	Relevant to claim No.
A	WO 0172251 A1 (KIMBERLY CLARK CO), 4 October 2001 (2001-10-04); abstract; figures 5-7 -- --------	1-21

Continuation of: second sheet

International Patent Classification (IPC)

A61F 13/537 (2006.01)
A61F 13/535 (2006.01)
A61F 13/539 (2006.01)

Download your patent documents at www.prv.se

The cited patent documents can be downloaded:

- From "Cited documents" found under our online services at www.prv.se (English version)
- From "Anförda dokument" found under "e-tjänster" at www.prv.se (Swedish version)

Use the application number as username. The password is **PLMPRTRFSZ**.

Paper copies can be ordered at a cost of 50 SEK per copy from PRV InterPat (telephone number 08-782 28 85).

Cited literature, if any, will be enclosed in paper form.

US	6241714 B1	05/06/2001	AU	718800	B2	20/04/2000
			AU	2096197	A	01/10/1997
			BR	9707965	A	27/07/1999
			CA	2247977	A1	18/09/1997
			CN	1165269	C	08/09/2004
			CN	1213288	A	07/04/1999
			CZ	9802890	A3	17/02/1999
			DE	19609462	A1	18/09/1997
			EP	0888103	A1	07/01/1999
			ES	2176690	T3	01/12/2002
			JP	2000507126	A	13/06/2000
			PA	8426201	A1	24/05/2000
			TW	392500	U	01/06/2000
			WO	9733546	A1	18/09/1997
			ZA	9701822	A	04/09/1997
US	20050267429 A1	01/12/2005	CA	2568132	A1	08/12/2005
			EP	1748751	A4	24/03/2010
			WO	2005115294	A3	28/09/2006
EP	1403037 A1	31/03/2004	BR	0209454	A	06/07/2004
			CN	1230294	C	07/12/2005
			CN	1505560	A	16/06/2004
			JP	4175114	B2	05/11/2008
			MX	PA03010068	A	02/04/2004
			US	20040102124	A1	27/05/2004
			WO	02090106	B1	23/01/2003
WO	2005084596 A1	15/09/2005	NONE			
WO	0059431 A1	12/10/2000	AT	330570	T	15/07/2006
			AU	762414	B2	26/06/2003
			AU	3933000	A	23/10/2000
			BR	0009546	A	26/12/2001
			CA	2362308	A1	12/10/2000
			CN	1165267	C	08/09/2004
			CN	1346255	A	24/04/2002
			DE	60028954	D1	03/08/2006
			EG	22782	A	31/08/2003
			EP	1171067	B1	21/06/2006
			ID	30474	A	13/12/2001
			JP	2002540848	A	03/12/2002
			PL	349917	A1	07/10/2002
			TR	200102870	T2	21/01/2002
			US	6348253	B1	19/02/2002

WO	0224133 A1	28/03/2002	AT	283015	T	15/12/2004
			AU	9114001	A	02/04/2002
			BR	0114090	A	22/07/2003
			CA	2422756	A1	28/03/2002
			CN	1471380	A	28/01/2004
			CN	1201711	C	18/05/2005
			DE	60107447	T2	08/12/2005
			EP	1318781	B1	24/11/2004
			ES	2233688	T3	16/06/2005
			HU	0303366	A2	28/01/2004
			JP	2008155035	A	10/07/2008
			JP	4377127	B2	02/12/2009
			JP	2004508892	A	25/03/2004
			MX	PA03002467	A	10/09/2004
			PL	360694	A1	20/09/2004
			US	20040002688	A1	01/01/2004
			US	20030195487	A1	16/10/2003
			US	20030093048	A1	15/05/2003
			US	7378568	B2	27/05/2008
			US	20020062113	A1	23/05/2002
			US	6700036	B2	02/03/2004
			US	6610904	B1	26/08/2003
WO	2005079542 A2	01/09/2005	NONE			

WO	9734559 A1	25/09/1997	AT	280560	T	15/11/2004
			AU	2580197	A	10/10/1997
			BR	9708144	A	27/07/1999
			CA	2249322	C	14/01/2003
			CN	1218384	A	02/06/1999
			CO	4790146	A1	31/05/1999
			CZ	9803023	A3	17/02/1999
			CZ	287990	B6	14/03/2001
			DE	69731403	T2	09/02/2006
			EG	21953	A	30/04/2002
			EP	0959850	A1	01/12/1999
			ES	2227685	T3	01/04/2005
			HU	222066	B1	28/04/2003
			HU	9902447	A3	28/12/1999
			ID	16783	A	13/11/1997
			JP	3249535	B2	21/01/2002
			JP	H11506963	A	22/06/1999
			NO	984405	A	23/11/1998
			TR	9801882	T2	21/12/1998
			US	6372952	B1	16/04/2002
			ZA	9702243	A	17/09/1997
WO	0019955 A2	13/04/2000	AU	6499999	A	26/04/2000
			BR	9914225	A	26/06/2001
			CA	2345608	A1	13/04/2000
			CN	1367674	A	04/09/2002
			CN	1213710	C	10/08/2005
			CO	5121067	A1	30/01/2002
			EP	1119328	A2	01/08/2001
			JP	2003521955	A	22/07/2003
			KR	20010085873	A	07/09/2001
			MX	PA01003402	A	01/01/2002
			PA	8483701	A1	29/09/2000
			SV	1999000172	A	06/07/2000
			TW	482664	B	11/04/2002
			US	7429689	B2	30/09/2008
			US	6673982	B1	06/01/2004
			US	20040102752	A1	27/05/2004
			ZA	200102549	A	26/03/2002

WO	9747263	A1	18/12/1997	AT	253881	T	15/11/2003
				AU	3568997	A	07/01/1998
				CA	2257690	C	25/03/2003
				DE	69726152	T2	02/09/2004
				EP	0912152	B1	12/11/2003
				ID	19853	A	13/08/1998
				JP	2000512183	A	19/09/2000
				KR	20000016609	A	25/03/2000
				US	5827254	A	27/10/1998
				ZA	9705213	A	19/02/1998
US	4988344	A	29/01/1991	CA	1328952	C	03/05/1994
				DE	68914327	D1	11/05/1994
				EP	0343941	A2	29/11/1989
				ES	2050798	T3	01/06/1994
				JP	2060646	A	01/03/1990
				JP	2907867	B2	21/06/1999
US	5957906	A	28/09/1999	US	6410820	B1	25/06/2002
				ZA	9810376	A	14/05/1999
FR	2044554	A	19/02/1971	NONE			
WO	0172251	A1	04/10/2001	AR	028271	A1	30/04/2003
				AU	4933201	A	08/10/2001
				BR	0108683	A	21/02/2006
				CN	1419433	A	21/05/2003
				EP	1267776	A1	02/01/2003
				JP	2004501676	A	22/01/2004
				MX	PA02008668	A	24/02/2003
				ZA	200206308	A	09/07/2004

PATENT COOPERATION TREATY

From the
INTERNATIONAL SEARCHING AUTHORITY

To:
Valea AB
Lindholmspiren 5
417 56 Göteborg

PCT

WRITTEN OPINION OF THE
INTERNATIONAL SEARCHING AUTHORITY

(PCT Rule 43*bis*.1)

Date of mailing *(day/month/year)*	21-02-2012
Applicant's or agent's file reference PG18340PC00	**FOR FURTHER ACTION** See paragraph 2 below

International application No.	International filing date *(day/month/year)*	Priority date *(day/month/year)*
PCT/SE2011/050859	28-06-2011	

International Patent Classification (IPC) or both national classification and IPC
See Supplemental Box

Applicant
SCA HYGIENE PRODUCTS AB et al

1. This opinion contains indications relating to the following items:

- [x] Box No. I Basis of the opinion
- [ ] Box No. II Priority
- [ ] Box No. III Non-establishment of opinion with regard to novelty, inventive step and industrial applicability
- [ ] Box No. IV Lack of unity of invention
- [x] Box No. V Reasoned statement under Rule 43*bis*.1(a)(i) with regard to novelty, inventive step and industrial applicability; citations and explanations supporting such statement
- [ ] Box No. VI Certain documents cited
- [x] Box No. VII Certain defects in the international application
- [ ] Box No. VIII Certain observations on the international application

2. **FURTHER ACTION**

If a demand for international preliminary examination is made, this opinion will be considered to be a written opinion of the International Preliminary Examining Authority ("IPEA") except that this does not apply where the applicant chooses an Authority other than this one to be the IPEA and the chosen IPEA has notified the International Bureau under Rule 66.1*bis*(b) that written opinions of this International Searching Authority will no be so considered.

If this opinion is, as provided above, considered to be a written opinion of the IPEA, the applicant is invited to submit to the IPEA a written reply together, where appropriate, with amendments, before the expiration of 3 months from the date of mailing of Form PCT/ISA/220 or before the expiration of 22 months from the priority date, whichever expires later.

For further options, see Form PCT/ISA/220.

3. For further details, see notes to Form PCT/ISA/220.

Name and mailing address of the ISA/SE	Date of completion of this opinion	Authorized officer
Patent- och registreringsverket Box 5055 S-102 42 STOCKHOLM Facsimile No. + 46 8 666 02 86	08-02-2012	Monika Bohlin Telephone No. + 46 8 782 25 00

Form PCT/ISA/237 (cover sheet) (July 2009)

Supplemental Box

In case the space in any of the preceding boxes is not sufficient.
Continuation of: cover sheet

International Patent Classification (IPC)

A61F 13/537 (2006.01)
A61F 13/535 (2006.01)
A61F 13/539 (2006.01)

WRITTEN OPINION OF THE
INTERNATIONAL SEARCHING AUTHORITY

International application No.
PCT/SE2011/050859

Box No. I **Basis of this opinion**

1. With regard to the **language**, this opinion has been established on the basis of:

   ☒ the international application in the language in which it was filed.

   ☐ a translation of the international application into _____ which is the language of a translation furnished for the purposes of international search (Rules 12.3(a) and 23.1(b)).

2. ☐ This opinion has been established taking into account the **rectification of an obvious mistake** authorized by or notified to this Authority under Rule 91 (Rule 43*bis*.1(a))

3. With regard to any **nucleotide and/or amino acid sequence** disclosed in the international application, this opinion has been established on the basis of a sequence listing filed or furnished:

   a. (means)

   ☐ on paper

   ☐ in electronic form

   b. (time)

   ☐ in the international application as filed

   ☐ together with the international application in electronic form

   ☐ subsequently to this Authority for the purposes of search

4. ☐ In addition, in the case that more than one version or copy of a sequence listing has been filed or furnished, the required statements that the information in the subsequent or additional copies is identical to that in the application as filed or does not go beyond the application as filed, as appropriate, were furnished.

5. Additional comments:

Box No. V **Reasoned statement under Rule 43bis.1(a)(i) with regard to novelty, inventive step and industrial applicability; citations and explanations supporting such statement**

1. Statement

Novelty (N)	Claims	1-21	YES
	Claims		NO
Inventive step (IS)	Claims		YES
	Claims	1-21	NO
Industrial applicability (IA)	Claims	1-21	YES
	Claims		NO

2. Citations and explanations

The claimed invention relates to an absorbent article with capacity to receive, spread and contain sudden fluid gushes of relatively large volume and high pressure. The object is to prevent side leakage and utilize the full absorption capacity of the article. This is according to the claimed invention achieved by an article comprising a first absorbent layer with an opening extending there through; a fluid control structure arranged below the first absorbent layer and comprising a first perforated polymeric layer and a non-perforated fibrous polymeric layer. The opening in the first absorbent layer and the porous flow control structure provides a large void volume for temporary fluid storage. The first perforated polymeric layer has high basis weight (50 – 150 g/m^2), whereby the article is given high bending stiffness.

Reference is made to the following documents:
D1: US6241714 B1
D2: US2005267429 A1
D3: EP1403037 A1
D4: WO2005084596 A1

D1 discloses an absorbent article having means for directing fluid within the article. The article comprises a first absorbent layer (32) having a through-going opening (34); a liquid distribution layer (22) which promotes distribution of the liquid in the longitudinal direction of the absorbent article; and a second absorbent layer (24) (see figure 1 and column 7 lines 1-19). In the embodiment shown in figure 1, the liquid distribution layer (22) comprises an undulated strip of non-perforated textile material (26) pleated onto an additional strip (28) made from an "uncreped-through air-dried" (UCTAD) fibrous material. The additional strip of material (28) is folded over downward in the edges so that the areas that have been folded over come to lie parallel to the undulating strip (26). Passages defining funnel-shaped openings (30) are to be found in the folded over areas of the additional strip of material (28). The second absorbent layer (24) is located underneath the additional strip of material (28) (see column 6 lines 41-67). In figure 11 is shown another embodiment having an additional material strip (42) provided with funnel-shaped openings. See figures1, 11, column 7 lines 1-19, column 9 lines 19-50.

.../...

Supplemental Box

In case the space in any of the preceding boxes is not sufficient.
Continuation of: Box No. V

D2 discloses an absorbent article with a topsheet (12), an absorbent core (14) and an acquisition/distribution transfer system (20) disposed intermediate the topsheet and the absorbent core. The system (20) includes at least one apertured material which is three dimensional and defines pores that taper inwardly from the core toward the topsheet. The apertured material has a basis weight of 25-100 g/m^2. See the abstract, figure 1 and claim 8.

D3 discloses a permeable and water resistant barrier sheet comprising a porous buffer sheet (10) and a water resistant nonwoven cloth (20) connected integrally with each other and combined with an absorbent sheet (30) to form an absorbing core. The porous buffer sheet is a perforated film formed desirably in an irregular structure having funnel-shaped perforated structures with top and bottom parts different in diameter from each other and, where the diameter thereof on the shorter diameter side is 1 mm or shorter and the number of holes is 20/cm^2 or more. The perforated film needs to be sufficiently stiff so that it does not deform significantly when pressure is applied to it. See the abstract, figures 3, 4, 8, paragraph [0026].

In document D4, different designs of a two-ply absorbent tissue comprising two apertured sheets are discussed. D4 discloses an absorbent tissue product comprising at least one tissue sheet provided with openings giving rise to cavities, having the shape of a funnel or a crater. The cavities extend from one side of the sheet, through the sheet and out on the other side of the sheet as a protrusion. The absorbent tissue product of D4 may be built up in different ways. The best effect is achieved by a multi-ply product. Figures 2 to 7 show cross sectional schematic views of multi-ply products, which for example include two tissue sheets or plies (21,31, 41,22, 32,42) provided with openings. In figures 2-7 the tissue sheets are shown schematically and the cavities of each sheet or ply have openings that are larger on one side than on the other. The sheets or plies may be arranged such that the sides with small openings (23,24) and (33,34), respectively, are directed towards each other, as in the embodiment shown in figure 3, or away from each other, as in the embodiment shown in figure 2, or a combination thereof, as in the embodiment shown in figure 4.

When the small openings (35) of both plies are directed towards each other, as in figure 3, a product having excellent absorbency and high bulk is achieved. The high absorbency is related to the suction of liquid into the large openings (36) of the cavities. Both plies (31,32) have their large openings (36) directed outwards and the liquid is sucked into the large opening and is sucked further towards the centre of the multi-ply product. The liquid will be retained in the product, between the plies, since capillary forces prevent the liquid from entering the small openings (35). The liquid cannot leave the product through the opposite ply, since this ply is also directed with its small openings (35) facing inwards. In the case the small openings (35) of one ply reach the inner side of the other ply (32), the inner side being the side facing towards the interior of the product, the absorbency is further improved. A flat, non-perforated ply can be arranged between the two apertured plies, as shown in figure 7. See the abstract, figures 2-7, page 1 line 29 – page 2 line 2, page 14 line 8-31, page 17 lines 4-12.

.../...

Supplemental Box

In case the space in any of the preceding boxes is not sufficient.
Continuation of: Box No. V

Novelty

None of the cited documents discloses an absorbent article including all technical features defined in claim 1. The subject matter of claims 1-21 is thus novel.

Inventive step

Claim 1

Document D1 represents the closest prior art. The subject matter of claim 1 differs from the disclosure of D1 in that the perforated polymeric layer has a basis weight in the interval 50 – 150 g/m^2. D1 does not specify the basis weight of the perforated layer. The effect of a relatively high basis weight is that the absorbent article is given a high bending stiffness, which in turn provides the absorbent article with an improved ability of resisting transverse compression between the thighs of a wearer, and keeps the first absorbent layer open for fluid reception throughout use of the article. However, from D2, the skilled person is aware of apertured sheets being used in absorbent articles and having a basis weight of 25-100 g/m^2. From document D3 the skilled person learns that an apertured sheet when used in an absorbent article needs to be sufficiently stiff so that it does not deform significantly when pressure is applied to it. It is therefore an obvious measure to provide the article disclosed in D1 with a perforated polymeric layer having a sufficient basis weight. The subject matter of claim 1 therefore lacks inventive step.

Claims 9-10

The subject matter of claim 9 differs additionally from D1 in that the non-perforated layer is sandwiched between two perforated polymeric layers. The effect of this difference is that liquid will stay within the fluid control structure longer and horizontal flow within the structure is promoted. This effect is accentuated even more if the apertures in the first and second perforated layers are out of register, as specified in claim 10. Consequently, with the background of D1, the problem is to design a fluid control structure that can keep the fluid longer time inside the structure. From document D4 the skilled person learns how to design an absorbent tissue wipe so that liquid will be retained in the wipe. By using this knowledge and applying the same principles when designing a fluid control structure to be used in an absorbent article as disclosed in D1, the skilled person would arrive at the subject matter of claims 9-10.

Claims 2-8, 11-21

The technical features defined in the remaining claims 2-8 and 11-21 are either disclosed in the cited documents or are considered to involve measures or minor details obvious to a person skilled in the art. Therefore, the invention according to these claims is not considered to involve an inventive step.

Summary

The subject matter of claims 1-21 is novel, but is not considered to involve an inventive step. The subject matter of all the claims is industrially applicable.

Box No. VII Certain defects in the international application

The following defects in the form or contents of the international application have been noted:

In claim 14, on line 24, the second reference sign should be (33").

PATENT COOPERATION TREATY

PCT

INTERNATIONAL SEARCH REPORT

(PCT Article 18 and Rules 43 and 44)

Applicant's or agent's file reference PG18340PC00	**FOR FURTHER ACTION**	see Form PCT/ISA/220 as well as, where applicable, item 5 below.
International application No. PCT/SE2011/050859	International filing date *(day/month/year)* 28-06-2011	(Earliest) Priority Date *(day/month/year)*
Applicant SCA HYGIENE PRODUCTS AB et al		

This international search report has been prepared by this International Searching Authority and is transmitted to the applicant according to Article 18. A copy is being transmitted to the International Bureau.

This international search report consists of a total of 5 sheets.

☐ It is also accompanied by a copy of each prior art document cited in this report.

1. **Basis of the report**
   a. With regard to the **language**, the international search was carried out on the basis of:
      ☒ the international application in the language in which it was filed.
      ☐ a translation of the international application into _____ which is the language of a translation furnished for the purposes of international search (Rules 12.3(a) and 23.1(b)).
   b. ☐ This international search report has been established taking into account the **rectification of an obvious mistake** authorized by or notified to this Authority under Rule 91 (Rule 43.6*bis*(a)).
   c. ☐ With regard to any **nucleotide and/or amino acid sequence** disclosed in the international application, see Box No. I.
2. ☐ **Certain claims were found unsearchable** (See Box No. II).
3. ☐ **Unity of invention is lacking** (See Box No. III).
4. With regard to the **title**,
   ☒ the text is approved as submitted by the applicant.
   ☐ the text has been established by this Authority to read as follows:
5. With regard to the **abstract**,
   ☒ the text is approved as submitted by the applicant.
   ☐ the text has been established, according to Rule 38.2, by this Authority as it appears in Box No. IV. The applicant may, within one month from the date of mailing of this international search report, submit comments to this Authority.
6. With regard to the **drawings**,
   a. the figure of the **drawings** to be published with the abstract is Figure No. 1
      ☒ as suggested by the applicant.
      ☐ as selected by this Authority, because the applicant failed to suggest a figure.
      ☐ as selected by this Authority, because this figure better characterizes the invention.
   b. ☐ none of the figures is to be published with the abstract.

INTERNATIONAL SEARCH REPORT

International application No.
PCT/SE2011/050859

A. CLASSIFICATION OF SUBJECT MATTER

IPC: see extra sheet

According to International Patent Classification (IPC) or to both national classification and IPC

B. FIELDS SEARCHED

Minimum documentation searched (classification system followed by classification symbols)

IPC: A61F

Documentation searched other than minimum documentation to the extent that such documents are included in the fields searched

SE, DK, FI, NO classes as above

Electronic data base consulted during the international search (name of data base and, where practicable, search terms used)

EPO-Internal, PAJ, WPI data

C. DOCUMENTS CONSIDERED TO BE RELEVANT

Category*	Citation of document, with indication, where appropriate, of the relevant passages	Relevant to claim No.
X	US 6241714 B1 (RAIDEL MARIA ET AL), 5 June 2001 (2001-06-05); abstract; column 7, line 1 - line 19; column 9, line 19 - line 50; figures 1-11	1-8, 11-21
Y	--	9-10
A	US 20050267429 A1 (COHEN RICHMOND R), 1 December 2005 (2005-12-01); abstract; figure 1; claim 8 --	1-21
A	EP 1403037 A1 (JAPAN ABSORBENT TECH INST), 31 March 2004 (2004-03-31); abstract; figures 3,4,8; [0026] --	1-21

☒ Further documents are listed in the continuation of Box C. ☒ See patent family annex.

* Special categories of cited documents:
"A" document defining the general state of the art which is not considered to be of particular relevance
"E" earlier application or patent but published on or after the international filing date
"L" document which may throw doubts on priority claim(s) or which is cited to establish the publication date of another citation or other special reason (as specified)
"O" document referring to an oral disclosure, use, exhibition or other means
"P" document published prior to the international filing date but later than the priority date claimed
"T" later document published after the international filing date or priority date and not in conflict with the application but cited to understand the principle or theory underlying the invention
"X" document of particular relevance; the claimed invention cannot be considered novel or cannot be considered to involve an inventive step when the document is taken alone
"Y" document of particular relevance; the claimed invention cannot be considered to involve an inventive step when the document is combined with one or more other such documents, such combination being obvious to a person skilled in the art
"&" document member of the same patent family

Date of the actual completion of the international search	Date of mailing of the international search report
08-02-2012	21-02-2012
Name and mailing address of the ISA/SE Patent- och registreringsverket Box 5055 S-102 42 STOCKHOLM Facsimile No. + 46 8 666 02 86	Authorized officer Monika Bohlin Telephone No. + 46 8 782 25 00

INTERNATIONAL SEARCH REPORT

International application No.
PCT/SE2011/050859

C (Continuation). DOCUMENTS CONSIDERED TO BE RELEVANT

Category*	Citation of document, with indication, where appropriate, of the relevant passages	Relevant to claim No.
Y	WO 2005084596 A1 (SCA HYGIENE PROD AB ET AL), 15 September 2005 (2005-09-15); abstract; page 1, line 29 - page 2, line 2; page 14, line 8 - line 31; page 17, line 4 - line 12; figures 2-7 --	9-10
A	WO 0059431 A1 (KIMBERLY CLARK CO), 12 October 2000 (2000-10-12); abstract; page 24, line 14 - page 25, line 8; figures 7,10 --	1-21
A	WO 0224133 A1 (TREDEGAR FILM PROD CORP), 28 March 2002 (2002-03-28); abstract; figures 1-12 --	1-21
A	WO 2005079542 A2 (TREDEGAR FILM PROD CORP), 1 September 2005 (2005-09-01); abstract; figures 1-5 --	1-21
A	WO 9734559 A1 (PROCTER & GAMBLE), 25 September 1997 (1997-09-25); abstract; page 31, line 1 - line 5; page 35, line 20 - page 36, line 2; figure 5 --	1-21
A	WO 0019955 A2 (KIMBERLY CLARK CO), 13 April 2000 (2000-04-13); abstract; figures 1-3; claims 1-8 --	1-21
A	WO 9747263 A1 (PROCTER & GAMBLE), 18 December 1997 (1997-12-18); abstract; page 20, line 6 - line 20; figures 2,6 --	1-21
A	US 4988344 A (REISING GEORGE S ET AL), 29 January 1991 (1991-01-29); abstract; figure 3 --	1-21
A	US 5957906 A (ROE DONALD C ET AL), 28 September 1999 (1999-09-28); abstract; figure 6A --	1-21
A	FR 2044554 A (WUHRLIN JEAN), 19 February 1971 (1971-02-19); figure 2; claims 1-4 --	1-21

INTERNATIONAL SEARCH REPORT

International application No.
PCT/SE2011/050859

C (Continuation). DOCUMENTS CONSIDERED TO BE RELEVANT

Category*	Citation of document, with indication, where appropriate, of the relevant passages	Relevant to claim No.
A	WO 0172251 A1 (KIMBERLY CLARK CO), 4 October 2001 (2001-10-04); abstract; figures 5-7 -- --------	1-21

Continuation of: second sheet

International Patent Classification (IPC)

A61F 13/537 (2006.01)
A61F 13/535 (2006.01)
A61F 13/539 (2006.01)

Download your patent documents at www.prv.se

The cited patent documents can be downloaded:

- From "Cited documents" found under our online services at www.prv.se (English version)
- From "Anförda dokument" found under "e-tjänster" at www.prv.se (Swedish version)

Use the application number as username. The password is **PLMPRTRFSZ**.

Paper copies can be ordered at a cost of 50 SEK per copy from PRV InterPat (telephone number 08-782 28 85).

Cited literature, if any, will be enclosed in paper form.

US	6241714	B1	05/06/2001	AU	718800	B2	20/04/2000
				AU	2096197	A	01/10/1997
				BR	9707965	A	27/07/1999
				CA	2247977	A1	18/09/1997
				CN	1165269	C	08/09/2004
				CN	1213288	A	07/04/1999
				CZ	9802890	A3	17/02/1999
				DE	19609462	A1	18/09/1997
				EP	0888103	A1	07/01/1999
				ES	2176690	T3	01/12/2002
				JP	2000507126	A	13/06/2000
				PA	8426201	A1	24/05/2000
				TW	392500	U	01/06/2000
				WO	9733546	A1	18/09/1997
				ZA	9701822	A	04/09/1997
US	20050267429	A1	01/12/2005	CA	2568132	A1	08/12/2005
				EP	1748751	A4	24/03/2010
				WO	2005115294	A3	28/09/2006
EP	1403037	A1	31/03/2004	BR	0209454	A	06/07/2004
				CN	1230294	C	07/12/2005
				CN	1505560	A	16/06/2004
				JP	4175114	B2	05/11/2008
				MX	PA03010068	A	02/04/2004
				US	20040102124	A1	27/05/2004
				WO	02090106	B1	23/01/2003
WO	2005084596	A1	15/09/2005	NONE			
WO	0059431	A1	12/10/2000	AT	330570	T	15/07/2006
				AU	762414	B2	26/06/2003
				AU	3933000	A	23/10/2000
				BR	0009546	A	26/12/2001
				CA	2362308	A1	12/10/2000
				CN	1165267	C	08/09/2004
				CN	1346255	A	24/04/2002
				DE	60028954	D1	03/08/2006
				EG	22782	A	31/08/2003
				EP	1171067	B1	21/06/2006
				ID	30474	A	13/12/2001
				JP	2002540848	A	03/12/2002
				PL	349917	A1	07/10/2002
				TR	200102870	T2	21/01/2002
				US	6348253	B1	19/02/2002

WO	0224133	A1	28/03/2002	AT	283015	T	15/12/2004
				AU	9114001	A	02/04/2002
				BR	0114090	A	22/07/2003
				CA	2422756	A1	28/03/2002
				CN	1471380	A	28/01/2004
				CN	1201711	C	18/05/2005
				DE	60107447	T2	08/12/2005
				EP	1318781	B1	24/11/2004
				ES	2233688	T3	16/06/2005
				HU	0303366	A2	28/01/2004
				JP	2008155035	A	10/07/2008
				JP	4377127	B2	02/12/2009
				JP	2004508892	A	25/03/2004
				MX	PA03002467	A	10/09/2004
				PL	360694	A1	20/09/2004
				US	20040002688	A1	01/01/2004
				US	20030195487	A1	16/10/2003
				US	20030093048	A1	15/05/2003
				US	7378568	B2	27/05/2008
				US	20020062113	A1	23/05/2002
				US	6700036	B2	02/03/2004
				US	6610904	B1	26/08/2003
WO	2005079542	A2	01/09/2005	NONE			

WO	9734559	A1	25/09/1997	AT	280560	T	15/11/2004
				AU	2580197	A	10/10/1997
				BR	9708144	A	27/07/1999
				CA	2249322	C	14/01/2003
				CN	1218384	A	02/06/1999
				CO	4790146	A1	31/05/1999
				CZ	9803023	A3	17/02/1999
				CZ	287990	B6	14/03/2001
				DE	69731403	T2	09/02/2006
				EG	21953	A	30/04/2002
				EP	0959850	A1	01/12/1999
				ES	2227685	T3	01/04/2005
				HU	222066	B1	28/04/2003
				HU	9902447	A3	28/12/1999
				ID	16783	A	13/11/1997
				JP	3249535	B2	21/01/2002
				JP	H11506963	A	22/06/1999
				NO	984405	A	23/11/1998
				TR	9801882	T2	21/12/1998
				US	6372952	B1	16/04/2002
				ZA	9702243	A	17/09/1997
WO	0019955	A2	13/04/2000	AU	6499999	A	26/04/2000
				BR	9914225	A	26/06/2001
				CA	2345608	A1	13/04/2000
				CN	1367674	A	04/09/2002
				CN	1213710	C	10/08/2005
				CO	5121067	A1	30/01/2002
				EP	1119328	A2	01/08/2001
				JP	2003521955	A	22/07/2003
				KR	20010085873	A	07/09/2001
				MX	PA01003402	A	01/01/2002
				PA	8483701	A1	29/09/2000
				SV	1999000172	A	06/07/2000
				TW	482664	B	11/04/2002
				US	7429689	B2	30/09/2008
				US	6673982	B1	06/01/2004
				US	20040102752	A1	27/05/2004
				ZA	200102549	A	26/03/2002

WO	9747263	A1	18/12/1997	AT	253881	T	15/11/2003
				AU	3568997	A	07/01/1998
				CA	2257690	C	25/03/2003
				DE	69726152	T2	02/09/2004
				EP	0912152	B1	12/11/2003
				ID	19853	A	13/08/1998
				JP	2000512183	A	19/09/2000
				KR	20000016609	A	25/03/2000
				US	5827254	A	27/10/1998
				ZA	9705213	A	19/02/1998
US	4988344	A	29/01/1991	CA	1328952	C	03/05/1994
				DE	68914327	D1	11/05/1994
				EP	0343941	A2	29/11/1989
				ES	2050798	T3	01/06/1994
				JP	2060646	A	01/03/1990
				JP	2907867	B2	21/06/1999
US	5957906	A	28/09/1999	US	6410820	B1	25/06/2002
				ZA	9810376	A	14/05/1999
FR	2044554	A	19/02/1971	NONE			
WO	0172251	A1	04/10/2001	AR	028271	A1	30/04/2003
				AU	4933201	A	08/10/2001
				BR	0108683	A	21/02/2006
				CN	1419433	A	21/05/2003
				EP	1267776	A1	02/01/2003
				JP	2004501676	A	22/01/2004
				MX	PA02008668	A	24/02/2003
				ZA	200206308	A	09/07/2004

PATENT COOPERATION TREATY

From the INTERNATIONAL BUREAU

PCT

SECOND AND SUPPLEMENTARY NOTICE INFORMING THE APPLICANT OF THE COMMUNICATION OF THE INTERNATIONAL APPLICATION (TO DESIGNATED OFFICES WHICH APPLY THE 30 MONTH TIME LIMIT UNDER ARTICLE 22(1))

(PCT Rule 47.1(c))

To:

Valea AB
Lindholmspiren 5
S-417 56 Göteborg
SUÈDE

Date of mailing *(day/month/year)* 31 October 2013 (31.10.2013)	
Applicant's or agent's file reference PG18340PC00	**IMPORTANT NOTICE**

International application No.	International filing date *(day/month/year)*	Priority date *(day/month/year)*
PCT/SE2011/050859	28 June 2011 (28.06.2011)	

Applicant
SCA HYGIENE PRODUCTS AB et al

1. **ATTENTION**: For any designated Office(s), for which the time limit under Article 22(1), as in force from 1 April 2002 (30 months from the priority date), **does not apply**, please see Form PCT/IB/308(First Notice) issued previously.

2. Notice is hereby given that the following designated Office(s), for which the time limit under Article 22(1), as in force from 1 April 2002, **does apply**, has/have requested that the communication of the international application, as provided for in Article 20, be effected under Rule 93*bis*.1. The International Bureau has effected that communication on the date indicated below:
03 January 2013 (03.01.2013)

   AZ, BY, CN, EP, HU, KG, KP, KR, MD, MK, MZ, NA, NG, PG, RU, SY, TM

   In accordance with Rule 47.1(c-*bis*)(i), those Offices will accept the present notice as conclusive evidence that the communication of the international application has duly taken place on the date of mailing indicated above and no copy of the international application is required to be furnished by the applicant to the designated Office(s).

3. The following designated Offices, for which the time limit under Article 22(1), as in force from 1 April 2002, **does apply**, have not requested, as at the time of mailing of the present notice, that the communication of the international application be effected under Rule 93*bis*.1 :

   AE, AG, AL, AM, AO, AP, AT, AU, BA, BB, BG, BH, BR, BW, BZ, CA, CH, CL, CO, CR, CU, CZ, DE, DK, DM, DO, DZ, EA, EC, EE, EG, ES, FI, GB, GD, GE, GH, GM, GT, HN, HR, ID, IL, IN, IS, JP, KE, KM, KN, KZ, LA, LC, LK, LR, LS, LT, LY, MA, ME, MG, MN, MW, MX, MY, NI, NO, NZ, OA, OM, PE, PH, PL, PT, RO, RS, SC, SD, SE, SG, SK, SL, SM, ST, SV, TH, TJ, TN, TR, TT, UA, US, UZ, VC, VN, ZA, ZM, ZW

   In accordance with Rule 47.1(c-*bis*)(ii), those Offices accept the present notice as conclusive evidence that the Contracting State for which that Office acts as a designated Office does not require the furnishing, under Article 22, by the applicant of a copy of the international application.

4. **TIME LIMITS for entry into the national phase**

   For the designated or elected Office(s) listed above, the applicable time limit for entering the national phase will, **subject to what is said in the following paragraph,** be **30 MONTHS** from the priority date.

   In practice, **time limits other than the 30-month time limit** will continue to apply, for various periods of time, in respect of certain of the designated or elected Office(s) listed above. For **regular updates on the applicable time limits** (30 or 31 months, or other time limit), Office by Office, refer to the *PCT Gazette*, the *PCT Newsletter* and the *PCT Applicant's Guide*, Volume II, National Chapters, all available from WIPO's Internet site, at http://www.wipo.int/pct/en/index.html.

   It is the applicant's **sole responsibility** to monitor all these time limits.

The International Bureau of WIPO
34, chemin des Colombettes
1211 Geneva 20, Switzerland

Facsimile No. +41 22 338 82 70

Authorized officer
Philippe Bécamel

e-mail: pt03.pct@wipo.int

Electronic Patent Application Fee Transmittal

Application Number:	
Filing Date:	
Title of Invention:	ABSORBENT ARTICLE HAVING INTAKE STRUCTURE
First Named Inventor/Applicant Name:	Patrik ANDERSSON
Filer:	Christopher P. Bruenjes/joann ennis
Attorney Docket Number:	049121-0366-00-US-504907

Filed as Large Entity

U.S. National Stage under 35 USC 371 Filing Fees

Description	Fee Code	Quantity	Amount	Sub-Total in USD($)
Basic Filing:				
National Stage Fee	1631	1	280	280
Natl Stage Search Fee - Report provided	1642	1	480	480
National Stage Exam - all other cases	1633	1	720	720
Pages:				
Claims:				
Claims in excess of 20	1615	1	80	80
Miscellaneous-Filing:				
Petition:				

Description	Fee Code	Quantity	Amount	Sub-Total in USD($)
Patent-Appeals-and-Interference:				
Post-Allowance-and-Post-Issuance:				
Extension-of-Time:				
Miscellaneous:				
			Total in USD ($)	**1560**

Electronic Acknowledgement Receipt

EFS ID:	17759878
Application Number:	14129401
International Application Number:	PCT/SE2011/050859
Confirmation Number:	4049
Title of Invention:	ABSORBENT ARTICLE HAVING INTAKE STRUCTURE
First Named Inventor/Applicant Name:	Patrik ANDERSSON
Customer Number:	105855
Filer:	Christopher P. Bruenjes/joann ennis
Filer Authorized By:	Christopher P. Bruenjes
Attorney Docket Number:	049121-0366-00-US-504907
Receipt Date:	26-DEC-2013
Filing Date:	
Time Stamp:	14:59:33
Application Type:	U.S. National Stage under 35 USC 371

Payment information:

Submitted with Payment	yes
Payment Type	Credit Card
Payment was successfully received in RAM	$1560
RAM confirmation Number	879
Deposit Account	500573
Authorized User	GRUDZIECKI, RONALD

The Director of the USPTO is hereby authorized to charge indicated fees and credit any overpayment as follows:

Charge any Additional Fees required under 37 C.F.R. 1.492 (National application filing, search, and examination fees)

Charge any Additional Fees required under 37 C.F.R. Section 1.17 (Patent application and reexamination processing fees)

Charge any Additional Fees required under 37 C.F.R. Section 1.19 (Document supply fees)

Charge any Additional Fees required under 37 C.F.R. Section 1.20 (Post Issuance fees)

Charge any Additional Fees required under 37 C.F.R. Section 1.21 (Miscellaneous fees and charges)

File Listing:

Document Number	Document Description	File Name	File Size(Bytes)/ Message Digest	Multi Part /.zip	Pages (if appl.)
1	Transmittal of New Application	049121_0366__appltransmittal.pdf	184914 898712742bd02ebaae785de1e6d36212db4013d2	no	3
Warnings:					
Information:					
2	Application Data Sheet	049121_0366_ADS.pdf	1089136 baf496ec6166f1ddc979afb5aa7a0414d822f5a7	no	5
Warnings:					
Information:					
3	Specification	049121_0366__speccleanversion.pdf	1257533 b0f02c522a1a3bc92117d5fdf368030df5955b7f	no	20
Warnings:					
Information:					
4	Drawings-other than black and white line drawings	049121_0366__drawings.pdf	142342 f0dd1e4dd7a26470c55523b0205612cf689267d8	no	3
Warnings:					
Information:					
5	Oath or Declaration filed	049121_0366__declpoa.pdf	210618 13b07fa1845e8560eb65b736ca8487a97f66103a	no	3
Warnings:					
Information:					
6		049121_0366__preliminaryamendmentwithmarkedupversion.pdf	1653590 5585ae20d9f25c73da89863ea9414099df2c03ea	yes	33

Multipart Description/PDF files in .zip description

Document Description	Start	End
Preliminary Amendment	1	1
Specification	2	2
Abstract	3	3

	Claims		4	9	
	Applicant Arguments/Remarks Made in an Amendment		10	11	
	Abstract		12	12	
	Applicant Arguments/Remarks Made in an Amendment		13	33	
Warnings:					
Information:					
7		049121_0366__IDS.pdf	231993 8770d340dc8e61b32d25f1f6e06650729cd1dc4f	yes	4
	Multipart Description/PDF files in .zip description				
	Document Description		**Start**	**End**	
	Transmittal Letter		1	3	
	Information Disclosure Statement (IDS) Form (SB08)		4	4	
Warnings:					
Information:					
8	Foreign Reference	EP0336578A1.pdf	1253109 13e5a931f43cfb800e461f30203c85708398b00f	no	15
Warnings:					
Information:					
9	Foreign Reference	EP1403037A1.pdf	602897 8aece80552c90b5c49fe171e6ea8bf56a7235df4	no	34
Warnings:					
Information:					
10	Foreign Reference	FR2044554A5.pdf	100292 5ea20f3d56b71052d4b289af4233d588e396a993	no	5
Warnings:					
Information:					
11	Foreign Reference	WO9734559A1.pdf	1531169 2299d771629b3d4179076b5ee6c064d289439e54	no	57
Warnings:					
Information:					
12	Foreign Reference	WO9747263A1.pdf	790547 8717941be78793d4aa4220c24602d58fe181a50c	no	36

Warnings:					
Information:					
13	Foreign Reference	WO0019955A2.pdf	2308603 1a32e38f010d653886ae8c7dd1b69ddf6f9a8ae1	no	135
Warnings:					
Information:					
14	Foreign Reference	WO0059431A1.pdf	1312520 b97a42afe14169a151f1b5070db1501b50801fdf	no	62
Warnings:					
Information:					
15	Foreign Reference	WO0172251A1.pdf	839107 ff5bc9dc60eeda3bf29c1e88319687c0d0f7ad16	no	52
Warnings:					
Information:					
16	Foreign Reference	WO0224133A1.pdf	909804 05473e503a29d260a3835a33346a607a60f7aabc	no	41
Warnings:					
Information:					
17	Foreign Reference	WO2005079542A2.pdf	595388 36458f6183ed2168ce8eabd716f97b73cbe98650	no	20
Warnings:					
Information:					
18	Foreign Reference	WO2005084596A1.pdf	732631 745fa9bd98a363947f11189839136bcac9c2f057	no	29
Warnings:					
Information:					
19	Foreign Reference	WO2009105000A1.pdf	547369 3391e7bd34626dddffd958bc84c7dfde83887fbd	no	42
Warnings:					
Information:					
20	Documents submitted with 371 Applications	049121_0366__titlepgWO2013002686.pdf	84362 e5fd18075ca1adbc29019c7de0b3706d47f4b594	no	2
Warnings:					
Information:					
21	Documents submitted with 371 Applications	049121_0366__writtenopinionexaminingauth.pdf	350085 b2d859c445c72a487209aac8f8e06f95a25a6a66	no	5

Warnings:					
Information:					
22	Documents submitted with 371 Applications	049121_0366__IPRP.pdf	550264 21d36e5fba4d7871116fdb039029f08afc5a2c5f	no	10
Warnings:					
Information:					
23	Documents submitted with 371 Applications	049121_0366__ISRWO.pdf	836791 96c1bf6fd86cff6a0f1fa33659776ae260633c82	no	17
Warnings:					
Information:					
24	Documents submitted with 371 Applications	049121_0366__ISR.pdf	341552 141263e84c729eac892ffada20ba328d8d56f6b3	no	9
Warnings:					
Information:					
25	Documents submitted with 371 Applications	049121_0366__secondPCTIB308.pdf	77779 b663547cc4406ad19428a8faba7da726d79be4fc	no	1
Warnings:					
Information:					
26	Fee Worksheet (SB06)	fee-info.pdf	36888 fb29ae349ba15b3dc2f9aa3f416e59bea9f47e51	no	2
Warnings:					
Information:					
			Total Files Size (in bytes):	18571283	

This Acknowledgement Receipt evidences receipt on the noted date by the USPTO of the indicated documents, characterized by the applicant, and including page counts, where applicable. It serves as evidence of receipt similar to a Post Card, as described in MPEP 503.

New Applications Under 35 U.S.C. 111
If a new application is being filed and the application includes the necessary components for a filing date (see 37 CFR 1.53(b)-(d) and MPEP 506), a Filing Receipt (37 CFR 1.54) will be issued in due course and the date shown on this Acknowledgement Receipt will establish the filing date of the application.

National Stage of an International Application under 35 U.S.C. 371
If a timely submission to enter the national stage of an international application is compliant with the conditions of 35 U.S.C. 371 and other applicable requirements a Form PCT/DO/EO/903 indicating acceptance of the application as a national stage submission under 35 U.S.C. 371 will be issued in addition to the Filing Receipt, in due course.

New International Application Filed with the USPTO as a Receiving Office
If a new international application is being filed and the international application includes the necessary components for an international filing date (see PCT Article 11 and MPEP 1810), a Notification of the International Application Number and of the International Filing Date (Form PCT/RO/105) will be issued in due course, subject to prescriptions concerning national security, and the date shown on this Acknowledgement Receipt will establish the international filing date of the application.

PCT REQUEST

Print Out (Original in Electronic Form)

0	**For receiving Office use only**	
0-1	International Application No.	PCT/SE2011/050859
0-2	International Filing Date	28 June 2011 (28.06.2011)
0-3	Name of receiving Office and "PCT International Application"	RO/SE

0-4	**Form PCT/RO/101 PCT Request**	
0-4-1	Prepared Using	PCT Online Filing Version 3.5.000.225 MT/FOP 20020701/0.20.5.20
0-5	**Petition** The undersigned requests that the present international application be processed according to the Patent Cooperation Treaty	
0-6	**Receiving Office (specified by the applicant)**	Swedish Patent and Registration Office (RO/SE)
0-7	**Applicant's or agent's file reference**	PG18340PC00
I	**Title of Invention**	ABSORBENT ARTICLE HAVING INTAKE STRUCTURE
II	**Applicant**	
II-1	This person is	Applicant only
II-2	Applicant for	All designated States except US
II-4	Name	SCA HYGIENE PRODUCTS AB
II-5	Address	405 03 GÖTEBORG Sweden
II-6	State of nationality	SE
II-7	State of residence	SE
III-1	**Applicant and/or inventor**	
III-1-1	This person is	Applicant and inventor
III-1-2	Applicant for	US only
III-1-4	Name (LAST, First)	ANDERSSON, Patrik
III-1-5	Address	Hedens Väg 45 427 42 Billdal Sweden
III-1-6	State of nationality	SE
III-1-7	State of residence	SE

PCT REQUEST

Print Out (Original in Electronic Form)

III-2	**Applicant and/or inventor**	
III-2-1	This person is	Applicant and inventor
III-2-2	Applicant for	US only
III-2-4	Name (LAST, First)	BERGSTRÖM, Per
III-2-5	Address	Doktor Heymans Gata 1 413 22 Göteborg Sweden
III-2-6	State of nationality	SE
III-2-7	State of residence	SE
III-3	**Applicant and/or inventor**	
III-3-1	This person is	Applicant and inventor
III-3-2	Applicant for	US only
III-3-4	Name (LAST, First)	LUNDMAN, Malin
III-3-5	Address	Näckrosvägen 111 435 40 Mölnlycke Sweden
III-3-6	State of nationality	SE
III-3-7	State of residence	SE
IV-1	**Agent or common representative; or address for correspondence**	
	The person identified below is hereby/ has been appointed to act on behalf of the applicant(s) before the competent International Authorities as:	Agent
IV-1-1	Name	Valea AB
IV-1-2	Address	Lindholmspiren 5 417 56 Göteborg Sweden
IV-1-3	Telephone No.	+46 31 507700
IV-1-4	Facsimile No.	+46 31 7790640
IV-1-5	e-mail	got@valea.se
V	**DESIGNATIONS**	
V-1	**The filing of this request constitutes under Rule 4.9(a), the designation of all Contracting States bound by the PCT on the international filing date, for the grant of every kind of protection available and, where applicable, for the grant of both regional and national patents.**	
VI-1	**Priority Claim**	NONE
VII-1	**International Searching Authority Chosen**	Swedish Patent and Registration Office (ISA/SE)

PCT REQUEST

Print Out (Original in Electronic Form)

VIII	**Declarations**	Number of declarations	
VIII-1	Declaration as to the identity of the inventor	–	
VIII-2	Declaration as to the applicant's entitlement, as at the international filing date, to apply for and be granted a patent	–	
VIII-3	Declaration as to the applicant's entitlement, as at the international filing date, to claim the priority of the earlier application	–	
VIII-4	Declaration of inventorship (only for the purposes of the designation of the United States of America)	–	
VIII-5	Declaration as to non-prejudicial disclosures or exceptions to lack of novelty	–	
IX	**Check list**	Number of sheets	Electronic file(s) attached
IX-1	Request (including declaration sheets)	4	✓
IX-2	Description	20	✓
IX-3	Claims	3	✓
IX-4	Abstract	1	✓
IX-5	Drawings	3	✓
IX-7	TOTAL	31	
	Accompanying Items	Paper document(s) attached	Electronic file(s) attached
IX-8	Fee calculation sheet	–	✓
IX-18	PCT-SAFE physical media	–	–
IX-20	**Figure of the drawings which should accompany the abstract**	1	
IX-21	**Language of filing of the international application**	English	
X-1	**Signature of applicant, agent or common representative**	(PKCS7 Digital Signature)	
X-1-1	Name	Valea AB	
X-1-2	Name of signatory	SE, Valea AB, A. Romare 22456	
X-1-3	Capacity (if such capacity is not obvious from reading the request)	(Representative)	

FOR RECEIVING OFFICE USE ONLY

10-1	**Date of actual receipt of the purported international application**	28 June 2011 (28.06.2011)
10-2	**Drawings:**	
10-2-1	Received	
10-2-2	Not received	
10-3	**Corrected date of actual receipt due to later but timely received papers or drawings completing the purported international application**	
10-4	**Date of timely receipt of the required corrections under PCT Article 11(2)**	
10-5	**International Searching Authority**	ISA/SE
10-6	**Transmittal of search copy delayed until search fee is paid**	

FOR INTERNATIONAL BUREAU USE ONLY

11-1	**Date of receipt of the record copy by the International Bureau**	

(12) INTERNATIONAL APPLICATION PUBLISHED UNDER THE PATENT COOPERATION TREATY (PCT)

(19) World Intellectual Property Organization
International Bureau

(43) International Publication Date
3 January 2013 (03.01.2013)

WIPO | PCT

(10) International Publication Number
WO 2013/002686 A1

(51) International Patent Classification:
A61F 13/537 (2006.01) *A61F 13/539* (2006.01)
A61F 13/535 (2006.01)

(21) International Application Number:
PCT/SE2011/050859

(22) International Filing Date:
28 June 2011 (28.06.2011)

(25) Filing Language: English

(26) Publication Language: English

(71) Applicant *(for all designated States except US)*: **SCA HYGIENE PRODUCTS AB** [SE/SE]; S-405 03 Göteborg (SE).

(72) Inventors; and
(75) Inventors/Applicants *(for US only)*: **ANDERSSON, Patrik** [SE/SE]; Hedens Väg 45, S-427 42 Billdal (SE). **BERGSTRÖM, Per** [SE/SE]; Doktor Heymans Gata 1, S-413 22 Göteborg (SE). **LUNDMAN, Malin** [SE/SE]; Näckrosvägen 111, S-435 40 Mölnlycke (SE).

(74) Agent: **Valea AB**; Lindholmspiren 5, S-417 56 Göteborg (SE).

(81) Designated States *(unless otherwise indicated, for every kind of national protection available)*: AE, AG, AL, AM, AO, AT, AU, AZ, BA, BB, BG, BH, BR, BW, BY, BZ, CA, CH, CL, CN, CO, CR, CU, CZ, DE, DK, DM, DO, DZ, EC, EE, EG, ES, FI, GB, GD, GE, GH, GM, GT, HN, HR, HU, ID, IL, IN, IS, JP, KE, KG, KM, KN, KP, KR, KZ, LA, LC, LK, LR, LS, LT, LU, LY, MA, MD, ME, MG, MK, MN, MW, MX, MY, MZ, NA, NG, NI, NO, NZ, OM, PE, PG, PH, PL, PT, RO, RS, RU, SC, SD, SE, SG, SK, SL, SM, ST, SV, SY, TH, TJ, TM, TN, TR, TT, TZ, UA, UG, US, UZ, VC, VN, ZA, ZM, ZW.

(84) Designated States *(unless otherwise indicated, for every kind of regional protection available)*: ARIPO (BW, GH, GM, KE, LR, LS, MW, MZ, NA, SD, SL, SZ, TZ, UG, ZM, ZW), Eurasian (AM, AZ, BY, KG, KZ, MD, RU, TJ, TM), European (AL, AT, BE, BG, CH, CY, CZ, DE, DK, EE, ES, FI, FR, GB, GR, HR, HU, IE, IS, IT, LT, LU, LV, MC, MK, MT, NL, NO, PL, PT, RO, RS, SE, SI, SK, SM,

[Continued on next page]

(54) Title: ABSORBENT ARTICLE HAVING INTAKE STRUCTURE

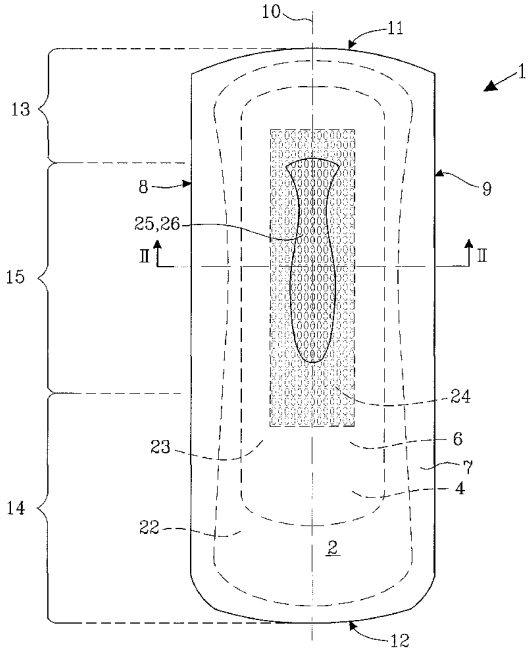

Fig. 1

(57) Abstract: An absorbent article (1) comprising a fluid permeable topsheet (2), a fluid impermeable backsheet (4) and an absorbent core (6) enclosed between the topsheet (2) and the backsheet (4). The absorbent core (6) comprises a first absorbent layer (22) having an opening (25) extending therethrough. A fluid flow control structure (24) is arranged between the first absorbent layer (22) and the backsheet (4). The fluid flow control structure (24) is a layered structure comprising a non-perforated fibrous polymeric layer (31) and a first perforated polymeric layer (32) having a basis weight of from 50 g/m^2 to100 g/m^2.

WO 2013/002686 A1

TR), OAPI (BF, BJ, CF, CG, CI, CM, GA, GN, GQ, GW, ML, MR, NE, SN, TD, TG).

Published:

— *with international search report (Art. 21(3))*

ABSORBENT ARTICLE HAVING INTAKE STRUCTURE

TECHNICAL FIELD

The invention pertains to an absorbent article comprising a fluid permeable topsheet, a fluid impermeable backsheet and an absorbent core enclosed between the topsheet and the backsheet, the absorbent core comprising a first absorbent layer and comprising an opening extending through the first absorbent layer.

BACKGROUND OF THE INVENTION

Absorbent articles of the kind that is worn inside ordinary underpants include incontinence shields and sanitary napkins. As these articles have to be sized and configured to fit in the limited space available in the crotch portion of the underwear, the articles are by necessity designed with a relatively small width. For this reason, a particular problem with such articles is that they may leak at the side edges, before the full absorption capacity of the article has been utilized.

Side leakage may occur as a consequence of absorbed fluid being dispersed equally fast in all directions from the point where the fluid enters the article. This will lead to the fluid escaping the article at the side edges before being distributed to the end portions of the article. Another cause of side leakage may be when the intake capacity of the article is insufficient to allow all fluid that is exuded onto the article to directly enter inside the article. Instead, the fluid will flow on the topsheet and out over the side edges of the article where it can leak out and soil the wearer's clothing. A further drawback when fluid flows on the outside of the topsheet is that a large portion of the body-contacting topsheet will be wet. This is of course highly undesirable as it makes the article unhygienic and unpleasant to wear.

Incontinence shields and sanitary napkins are designed to have a total absorption capacity that is large enough to absorb all fluid that is expected to be released to the absorbent article during a period of wear. However, the fluid is normally not exuded in a steady flow but as sudden gushes of relatively large volume under high pressure and during a very short time period. Accordingly, it would be desirable if the absorbent article was able to receive and contain the emitted fluid with corresponding speed.

Great efforts have been made in the past in order to overcome the side leakage problem in relation to disposable absorbent articles such as incontinence shields and sanitary napkins. However, to date no such effort has been completely successful.

International publication WO 2009/105000 discloses a laminate fibrous web having recesses with a diminishing cross-sectional area in a thickness direction of the web. The web can be used as a fluid intake material and is taught to improve fluid flow through the web.

Although the prior art laminate material may alleviate the side leakage problem to some extent, there is still a great need for further improvements of the side leakage security for the kind of absorbent article that is worn in the crotch portion of an undergarment.

SUMMARY OF THE INVENTION

In accordance with the invention, there is provided an absorbent article having improved intake capacity, fluid distribution properties and leakage security.

The absorbent article according to the invention has a longitudinal direction and a transverse direction, side edges extending in the longitudinal direction and end edges extending in the transverse direction and comprises a fluid permeable topsheet, a fluid impermeable backsheet and an absorbent core enclosed between the topsheet and the backsheet, the absorbent core comprising a first absorbent layer, the first absorbent layer having an opening extending therethrough. A fluid flow control structure is arranged between the first absorbent layer and the backsheet, the fluid flow control structure being a layered structure comprising a non-perforated fibrous polymeric layer and a first perforated polymeric layer, the first perforated polymeric layer having a basis weight of from 50 g/m^2 to150 g/m^2, preferably a basis weight of from 60 g/m^2 to 100 g/m^2.

The fluid flow control structure provides the article with high intake capacity.

Moreover, the article of the invention provides a large void volume for temporary storage of fluid. The void volume is created both by the hollow space or well formed at the opening in the absorbent layer and internally in the porous fluid flow control structure. As soon as the fluid has entered into the fluid flow control structure it may run in the open

pore structure of the non-perforated layer and be distributed away from the initially wetted area of the absorbent article. The fluid flow control structure not only enhances fluid transport away from the initially wetted area but also promotes fluid distribution throughout the absorbent core both in the length direction and in the thickness direction of the article. The width of the fluid flow control structure may be smaller than the width of the first absorbent layer, whereby the fluid dispersion rate changes at the edge of the fluid flow control structure. The fluid flow control structure is preferably a highly porous structure with less resistance to fluid flow than the first absorbent layer, implying that fluid will by preference continue to move in the fluid flow control structure. Accordingly, the edges of the fluid flow control structure may act as barriers to fluid distribution transversely to the side edges of the absorbent article, reducing the risk of side failure.

The opening through the first absorbent layer is preferably placed in the wetting area of the article. The wetting area of the article is that part of the article which is designed to be initially wetted by emitted fluid when the article is being worn and is located in a crotch area of the absorbent article. By arranging the opening in the first absorbent layer in the wetting area, emitted fluid can flow directly into the opening and be collected and temporarily contained in the space defined by the opening and adjacent layers of the absorbent article.

The first absorbent layer in an absorbent article of the invention may have one or more openings. The opening or openings may be of any suitable shape or combination of shapes, such as circular, oval, rectangular, square, star-shaped, flower-shaped, heart-shaped, H-shaped, T-shaped, I-shaped etc. Accordingly, the positioning, shape and size of the opening or openings may be varied within the scope of the invention.

Due to its high basis weight and the combination of a perforated layer and a non-perforated layer, the fluid flow control structure will preferably have relatively high bending stiffness. A high bending stiffness provides the absorbent article with an improved ability of resisting transverse compression between the thighs of a wearer of the article and counteracts unwanted deformation of the article during wear, such that the opening in the first absorbent layer is kept open for fluid reception throughout use of the article. The bending stiffness or flexure resistance of the laminate material in the fluid flow control structure may be 0.5 -5 N, preferably 1-4 N, as measured by the modified ASTM D 4032-82 CIRCULAR BEND PROCEDURE. It may be desirable that the bending stiffness of any

part of the absorbent article extending laterally outside of the fluid flow control structure has a lower bending stiffness than the fluid flow control structure whereby such less stiff lateral portions of the absorbent article may act as cushioning means between the fluid flow control structure and the wearer's legs.

The absorbent article according to the invention may comprise a second absorbent layer being arranged between the fluid flow control structure and the backsheet.

The first perforated polymeric layer may be a nonwoven, a film or a film/nonwoven laminate. Preferably, the first perforated polymeric layer is a nonwoven material. Suitable polymers for the first perforated polymeric layer may be polyolefins, polyesters, polyamides and blends and combinations of such polymers with polypropylene being preferred. The nonwoven materials may be carded resin bonded materials, carded through-air bonded materials, spunbond-meltbond-spunbond (SMS) materials, carded hydroentangled materials or carded thermobonded materials.

The first perforated polymeric layer may be a three-dimensionally formed layer having penetrating apertures, the apertures extending from a first surface of the layer towards a second surface of the layer, forming protrusions on the second surface and preferably being funnel-shaped. With a funnel-shaped aperture as used herein is implied an aperture having a tapering shape in its direction of extension such that the cross-sectional area of the aperture is diminishing when moving along the aperture.

The first perforated polymeric layer may be arranged with the second surface facing the non-perforated fibrous polymeric layer or may be arranged with the second surface facing away from the non-perforated fibrous polymeric layer.

The first perforated polymeric layer may be arranged as the first layer of the fluid flow control structure, i.e. as the layer of the structure that is located closest to the topsheet.

The apertures in the first perforated polymeric layer may have an average size of 0.5 – 5 mm, measured at the smallest diameter of the apertures.

The open area of the first perforated polymeric layer may be 5-30%, preferably 10-25%.

The non-perforated fibrous polymeric layer may be a high loft material of 20-120 gsm, preferably 60-100 gsm. The polymer for the non-perforated fibrous polymeric layer may be polyester.

The fluid flow control structure may be a three-layer structure consisting of the non-perforated fibrous polymeric layer, the first perforated polymeric layer and a second perforated polymeric layer, the non-perforated fibrous polymeric layer being sandwiched between the first perforated polymeric layer and the second perforated polymeric layer.

The second perforated polymeric layer may be a three-dimensionally formed layer having apertures extending from a first surface of the web towards a second surface of the web and forming protrusions on the second surface.

The layers in the fluid flow control structure may be attached to each other by means of an adhesive. However, other means of joining of the layers such as thermo-bonding by hot embossing or ultrasonic bonding may be used as well as layers being joined without using any bonding means. The fluid flow control structure of the invention has an overall planar shape. In particular, the non-perforated fibrous polymer layer should preferably have uniform thickness and a uniform pore structure. Bonding between the layers should preferably be carried out so as to have minimum impact on the shape and pore structure of the non-perforated fibrous polymer layer.

The polymer materials of the fluid flow control structure may be non-absorbent materials which do not retain any fluid in the material itself. The function of the fluid flow control structure is to provide the absorbent article with temporary fluid holding capacity and to distribute fluid in the article. As the polymer materials in the fluid flow control structure may be hydrophobic, and may have a wetting angle (θ) of 90° or close to 90° implying that they have no or very low wettability when contacted with aqueous fluids, it is may be an advantage if the components of the fluid flow control structure have been treated to lower the wetting angle and render them hydrophilic, i.e. wettable by body fluids. A perfectly wettable material has a wetting angle (θ) of 0°. Any commonly known method for rendering a hydrophobic material hydrophilic may be used, such as treatment with surfactants, plasma or corona treatment, etc.

One aspect of an example embodiment concerns a three-layer fluid flow control structure, wherein both the first perforated polymeric layer and the second perforated polymeric layer may be a three-dimensionally formed layer having penetrating, preferably funnel-shaped apertures, extending from a first surface of the layer towards a second surface of the layer and forming protrusions on the second surface. Both perforated polymeric layers may be arranged with the second surface facing the non-perforated fibrous polymeric layer arranged between the perforated polymeric layers.

The apertures in the first and second perforated polymeric layers may be out of register with each other. When the apertures in the first and second perforated polymeric layers are out of register with each other, fluid impinging one of the layers cannot pass directly through the thickness of the fluid flow control structure but is forced to take a more tortuous path through the fluid flow control structure. Moreover, when fluid enters the fluid flow control structure through a first perforated polymeric layer that is arranged facing the topsheet of the article at least some of the fluid travels downward towards the backsheet. When the fluid reaches the second perforated polymeric layer at a non-perforated location, the fluid will run along the second perforated polymeric layer and be distributed inside the fluid flow control structure until it eventually may escape through an aperture in the second perforated polymeric layer. The second perforated polymeric layer may be a three-dimensionally shaped material with apertures forming protrusions on the side of the second perforated polymeric layer that is facing the non-perforated fibrous polymer layer of the fluid flow control structure. In such case, a network of interconnected channels is formed between the protrusions in which network the fluid may be captured and may flow a long distance away from the initially wetted area before leaving the fluid flow control structure.

Three-dimensionally shaped first and second perforated polymeric layers may be oriented with the apexes of the apertures, i.e. the protrusions, directed towards the non-perforated fibrous polymer layer or away from the non-perforated fibrous polymer layer. The three-dimensionally shaped first and second perforated polymeric layers and the high-loft non-perforated fibrous polymeric layer together contribute to the void volume of the fluid flow control structure and to the ability of the structure to contain and move fluid therethrough.

When the fluid flow control structure is a three-layer structure consisting of a non-perforated fibrous polymeric layer that is sandwiched between a first perforated polymeric

layer and a second perforated polymeric layer, the second perforated polymeric layer may be different from the first perforated polymeric layer with regard to chemical composition, physical composition, three-dimensionality, open area, aperture size etc. Alternatively, the second perforated polymeric layer may be identical to the first perforated polymeric layer. The second perforated polymeric layer may thus have a basis weight, open area and aperture size in accordance to the first perforated polymeric layer.

Both perforated polymeric layers may be three-dimensionally formed layers as disclosed herein. Each layer may have penetrating apertures that originate in a first surface of the layer and extend towards a second surface of the layer, with the apexes of the apertures forming protrusions at the second surface of the layer. The apertures may be tubular structures and are preferably funnel-shaped with a diminishing cross-sectional area when moving in a direction from the first surface to the second surface of the perforated layer.

Alternatively, one or both perforated polymer layers may be two-dimensional layers. When at least one of the perforated polymer layers is a three-dimensionally formed layer, such three-dimensionally formed perforated layer may be arranged with the first surface facing away from the non-perforated polymeric layer or with the first surface facing towards the non-perforated polymeric layer. In an absorbent article according to the invention, a three-dimensionally formed perforated polymer layer being oriented with the protrusions facing towards the topsheet of the article will generally promote fluid distribution in the X-Y plane, i.e. in the longitudinal and transverse directions of the article, to a higher extent than a three-dimensionally formed perforated polymer layer being oriented with the protrusions facing towards the backsheet of the article which will generally promote fluid transport in the Z-direction of the article, i.e. in the thickness direction.

The first and second perforated polymeric layers may pass fluid therethrough but act as protective barriers that prevent particles and fibres from entering the fluid flow control structure and interfering with fluid transport inside the fluid flow control structure. The particles and fibres may be absorbent materials from such as absorbent polymer particles commonly known as “superabsorbents”, cellulose fluff pulp fibres, etc.

The fluid flow control structure may have a high resistance to compression as measured in the Compression Test disclosed herein. Accordingly, the thickness of the flow control

structure at 5 kPa may be 60-80% of the thickness at 0.5 KPa at a first , second and third compression performed according to the compression test disclosed herein.

In an absorbent article according to the invention, the first absorbent layer may have more than one opening extending therethrough. The openings may be placed in the same general area of the absorbent article, such as in a crotch portion of the article or may be placed in different portions of the article such as in two or more of the crotch portion and the end portions. The crotch portion, as used herein, is the portion of the article that is designed to be placed in the crotch of a wearer and to be in contact with the pudendal area of the wearer. The crotch portion includes the wetting area of the article and can be asymmetrically placed in the longitudinal direction of the article. The end portions are placed on either side of the crotch portion in the longitudinal direction of the article. The article may be designed with end portions that are specifically adapted to be placed towards the front or the rear of a wearer and may then differ in size, shape, etc. to allow a user to apply the article in a correct way inside the underwear.

The absorbent article of the invention may be provided with means for fastening of the article in ordinary underwear or other supporting pant-garment. The fastening means may be adhesive fasteners, frictional fasteners, mechanical fasteners such as the hook part of a hook-and-loop fastener or combinations of different types of fasteners, as known in the art.

The absorbent article may be a diaper of the open type that is fastened around the lower torso of a wearer by means of tape fasteners, belts or similar or may be a closed-type pant diaper. The absorbent article may alternatively be of a kind that is worn inside a supporting panty or with a holder, such as a sanitary napkin, a panty liner or an incontinence protector. Preferably, the absorbent article is an incontinence protector.

An absorbent article according to the invention may comprise a fluid permeable topsheet, disposed at the surface of the incontinence protector which is intended to be facing a wearer of the incontinence protector, a backsheet disposed at the surface of the incontinence protector that is intended to be facing the undergarment of the wearer, and an absorbent core, enclosed between the topsheet and the backsheet.

The covering may be of a kind where the topsheet and the backsheet of the incontinence protector extend together laterally outside of the absorbent core along the whole circumference of the absorbent core and are connected to each other in an edge join around the periphery of the absorbent core. An edge join may be formed in any suitable manner as known in the art such as by means of adhesive, ultrasonic bonding, thermobonding, stitching, etc. Alternative covering arrangements such as wrapped-around covers are also conceivable within the scope of the invention.

The topsheet may consist of any material which is suitable for the purpose. Examples of commonly found topsheet materials are nonwoven materials, perforated plastic films, plastic or textile mesh, and fluid permeable foam layers. Laminates consisting of two or more topsheet materials are also commonly employed, as are topsheets consisting of different materials within different parts of the fluid permeable wearer-facing surface. The topsheet is preferably a non-apertured nonwoven web.

The backsheet is preferably fluid impermeable. However, backsheet materials that are only resistant to fluid penetration may be used particularly in instances where relatively small amounts of urine are expected to be taken up by the incontinence protector. The backsheet may be a thin, flexible, fluid-impermeable plastic film, but fluid-impermeable nonwoven materials, fluid impermeable foams and fluid impermeable laminates are also contemplated within the scope of the invention. The backsheet may be breathable, implying that air and vapor may pass through the backsheet. Furthermore, the backsheet may have an outer, garment-facing surface of a textile material such as nonwoven.

The absorbent core may be made up of any suitable absorbent or fluid uptake material as known in the art, such as one or more layers of cellulose fluff pulp, foam, fiber waddings, etc. The absorbent core may contain fibers or particles of highly absorbent polymer material, commonly known as superabsorbents, which are materials having the ability to absorb and retain large quantities of fluid upon formation of a hydrogel. The superabsorbents may be mixed with cellulose fluff pulp and/or may be arranged in pockets or layers in the absorbent core. The absorbent core may further incorporate components for improving the properties of the absorbent core. Some examples of such components are binder fibers, fluid-dispersing materials, fluid acquisition materials, etc. as known in the art.

The absorbent article may comprise more than one absorbent core. The cores may be an upper larger core and a lower, smaller core.

The article may further comprise components such as elastic elements. The elastic elements may be arranged along the side edges of the absorbent article. Elastic elements arranged along the side edges of the absorbent article improve the anatomical fit of the article by inducing longitudinal bending of the article in conformation with the curvature in a wearer's crotch.

When the absorbent core comprises a first absorbent layer and a second absorbent layer the fluid flow control structure may be arranged between the first absorbent layer and the second absorbent layer. The first absorbent layer may be placed beneath and in direct contact with the topsheet. Alternatively, the first absorbent layer may be placed in indirect contact with the topsheet through one or more intervening components such as tissue layers, acquisition layers or further absorbent layers. Similarly, the second absorbent layer may be placed directly beneath the fluid flow control structure and in direct contact with the fluid flow control structure and the backsheet but may alternatively be in indirect contact with one or both of those components by intervening components.

The absorbent layers of the core may be homogeneous structures or may in themselves be layered structures such as absorbent laminates of the same or different materials. The absorbent layers may have uniform thickness or may vary in thickness in different parts of the layers. Similarly, the basis weight and composition may vary within the absorbent layers. By way of example, an absorbent layer may comprise a mixture of absorbent and/or non-absorbent fibres and superabsorbent material, wherein the ratio of superabsorbent material to fibres may vary in the layer.

The fluid flow control structure may be of rectangular shape and may be surrounded in the longitudinal and lateral directions by portions of the absorbent core. Although other shapes and configurations for the fluid flow control structure may be used, it is generally advantageous if the fluid flow control structure has the same or smaller width than the absorbent core and also the same or shorter length than the absorbent core. The fluid flow control structure has a highly porous internal structure with less resistance to fluid flow than conventional absorption materials. This means that the fluid dispersion rate changes at the edge of the fluid flow control structure so that fluid reaching the edge will

continue to move primarily in the fluid flow control structure where the flow resistance is low before being absorbed by the core material. In this way, the edges of the fluid flow control structure act as barriers to fluid distribution transversely to the side edges of the absorbent article, thus reducing the risk of side failure. Conventional absorption materials such as cellulose fluff pulp, and superabsorbents have comparatively smaller capillaries than the fluid flow control structure. A fibrous structure with fine capillaries has a low fluid uptake capacity, but high fluid retention capability once the fluid has entered the structure. A superabsorbent material has even lower uptake rate and higher retention capability than the fibrous absorbent structures due to fluid uptake in such materials being driven mainly by osmotic pressure.

The components in the absorbent article may be connected to each other by conventional means such as construction adhesive, heat bonding, ultrasonic bonding, etc. It may not be necessary to bond internal components of the absorbent article to each other by special bonding means. Accordingly, it may suffice that such components are held together by frictional forces.

TEST METHODS

The modified ASTM D 4032-82 CIRCULAR BEND PROCEDURE

Apparatus:

The apparatus is a modified Circular Bend Stiffness Tester, having the following parts:

- A smooth-polished steel plate platform which is 102.0 x 102.0 x 6,35 millimeters having an 18.75 millimeter diameter orifice. The lap edge of the orifice should be at a 45 degree angle to a depth of 4.75 millimeters.
- A plunger having an overall length of 72.2 millimeters, a diameter of 6.25 millimeters, a ball nose having a radius of 2.97 millimeters and a needle point extending 0.88 millimeter therefrom having a 0.33 millimeter base diameter and a point having a radius of less than 0.5 millimeter, the plunger being mounted concentric with the orifice and having equal clearance on all sides. Note that the needle point is merely to prevent lateral movement of the test specimen during testing. Therefore, if the needle-point significantly adversely affects the test

specimen (for example, punctures an inflatable structure), then the needle-point should not be used. The bottom of the plunger should be set well above the top of the orifice plate. From this position, the downward stroke of the ball nose is to the exact bottom of the plate orifice.

- A force-measurement gauge and more specifically an Instron inverted compression load cell. The load cell has a load range of from 0.0 to 10 N.
- An actuator, and more specifically an Instron™ tester having an inverted compression load cell. The Instron ™ tester is made by the Instron Engineering Corporation, Canton, Massachusetts.

Number and preparation of specimens:

In order to perform the procedure for this test, 10 test specimens of 37,5 x 37.5 millimeter are cut from the tested laminate material.

Procedure:

The procedure for the CIRCULAR BEND PROCEDURE is as follows. The specimens are conditioned by leaving them in a room which is 21 ± 1° and 50 ± 2% relative humidity for a period of two hours. The test plate is leveled. The plunger speed is set at 50.0 centimeters per minute per full stroke length. A specimen is centered on the orifice platform below the plunger such that the body surface of the specimen is facing the plunger and the garment surface is facing the platform. The indicator zero is checked and adjusted, if necessary. The plunger is actuated. Touching the specimen during the testing should be avoided. The maximum force reading to the nearest gram is recorded. The above steps are repeated until all five of the identical specimens have been tested.

Compressibility

Procedure:

The principle of the method is to slowly compress a material with a metal rod to a force of 5 N while continuously measuring the thickness of the material. The result consists of the data points for force and extension. The force translates to a pressure given the contact area of the rod. The metal rod is cylindrical and has a diameter of 10 mm with a flat base. The rod is mounted in a 10N load cell in the upper fixture of an Instron testing apparatus. A flat plate is mounted in the bottom fixture and is centered under the rod to that a sample may be placed on top of the plate and be compressed without movement of the plate. The

rate of movement of the rod is 5 mm per minute. These settings have been pre-programmed into an Instron Bluehill program called "New Mecano 5 N", but before running a test, the program settings should be checked in order to make sure that all limits are set to their proper values. Running with a modified version could lead to damage to the equipment, especially the sensitive load cell.

Running a test:

The first run is an empty run without a sample. This run is used to find the zero thickness position, which is where the steel plate stops the rod. The empty run typically generates forces higher than the maximum limit set before the rod stops, because of the rapid increase in force that occurs when the rod impacts the metal and for which the apparatus cannot compensate sufficiently quickly. Care should be taken to ascertain that the load cell can withstand the impact without being damaged. Special settings can be used for the empty run to lower the limiting maximum force and the speed of the rod.

When the rod stops, the Instron equipment awaits user input. The extension is then manually reset to zero. This ensures that the extension is set to zero at the exact correct point where the rod touches the base and the extension is measured relative to the bottom plate. The rod may thereafter be manually moved up so that a sample can be placed on the lower plate.

To test a sample, the rod is moved manually so that it is above the surface of the sample and the program is started. The rod moves down at a speed of 5 mm per minute until the limiting force is reached.

Samples:

The samples are squares with 50 millimeter sides punched from the tested material. If the material has varying thickness, the samples are taken from the thickest parts of the material. The rod is pressed into the centre of the sample and each sample is tested three times without being moved between runs. Ten samples of each tested material are used, giving thirty measurements in total.

Results:

The result is the complete set of data points for force versus extension. The force is typically recalculated into pressure using the force measured divided by the bottom area

of the rod. The result may be plotted and reported or a specific pressure may be chosen and the thickness noted, so that the result is a thickness for a given pressure.

Open Area and Hole Diameter Measurement

The following method may be used to determine the open area and hole diameter for an apertured material:

Apparatus:

- a Nikon microscope
- a personal computer
- software NIS-Elements BR 3.10

Procedure:

- collect a sample of the apertured material
- position the sample on the reading surface of the microscope
- start the software
- catch a representative image of the sample
- perform the analysis of the properties by contrast technique involving highlighting of the areas occupied by the holes.

The software calculates the diameters of the highlighted holes as major diagonal and minor diagonal of a rhombus inscribed in the hole. The ratio between the diameters is used to determine the actual average conformation of the holes to a circular shape, wherein a ratio of 1 implies a perfectly circular shape.

The average hole area value obtained by means of the software is used to calculate the percent open area.

Alternative methods for determining open area and hole diameter may be used, such as manual methods and methods based on scanning electron microscopy.

BRIEF DESCRIPTION OF THE DRAWINGS

The invention will be described in greater detail below with reference to the figures shown in the appended drawings.

Figure 1	shows an incontinence protector according to the invention, seen from the side which will be facing the undergarment when the incontinence protector is being worn;
Figure 2	shows a cross-section through the incontinence protector in Fig. 1, taken along the line II-II;
Figure 3	shows a section through a fluid flow control structure according to the invention;
Figure 4	shows an exploded perspective view of a fluid flow control structure according to the invention; and
Figures 5a-d	show absorbent layers having openings therein.

DESCRIPTION OF EMBODIMENTS

The absorbent article of the invention is exemplified by an incontinence protector as shown in Figs. 1 and 2. It is to be understood that the invention is equally applicable to any type of hygienic absorbent article. Such articles include incontinence protectors, sanitary napkins, panty liners, diapers with tape fasteners, pant diapers or belted diapers.

Fig. 1 shows a urine incontinence protector 1 seen from the side of the incontinence protector 1 that is intended to be facing towards a wearer's body when the incontinence protector 1 is being worn.

The incontinence protector 1 comprises a fluid permeable topsheet 2, a backsheet 4 and an absorbent core 6, enclosed between the topsheet 2 and the backsheet 4.

The topsheet 2 and the backsheet 4 of the incontinence protector 1 are shown to extend together laterally outside of the absorbent core 6 along the whole circumference of the absorbent core 6 and are connected to each other in an edge join 7 around the periphery of the absorbent core 6.

The topsheet 2 and the backsheet 4 may consist of any material suitable for the particular purpose, as disclosed herein.

The incontinence protector 1 as shown in Figs. 1 and 2 has elongate, generally rectangular shape when fully extended in all directions The word "generally" in this context means that, for instance, the corners of the incontinence protector 1 may be rounded, or that the edges of the incontinence protector 1 may not be completely linear as is illustrated in Fig 1. The shape of the incontinence protector 1 shown in Fig. 1 should not be considered limiting to the invention. Accordingly, any other suitable shape may be used, such as hourglass shape, trapezoidal shape, triangular shape an oval shape, etc. The shape of the article of the invention may be symmetrical about a transverse centre line through the article, as shown in Fig. 1 or may be asymmetrical with end portions having differing shapes and/or differing sizes.

The incontinence protector 1 in Figs. 1 and 2 has two longitudinal side edges 8, 9 having equal length and extending generally in the same direction as a longitudinal center line 10 through the incontinence protector 1. Front and rear end edges 11, 12 extend transversely to the longitudinal center line 10 at the ends of the incontinence protector. The rear end edge 12 is intended to be orientated rearwards during use of the incontinence protector 1, and the front end edge 11 is intended to be facing forwards towards the abdomen of the wearer.

The incontinence protector 1 has a front end portion 13, a rear end portion 14 and a crotch portion 15 located intermediate the end portions 13,14. The crotch portion 15 is that portion of the incontinence protector 1 which is intended to be placed against the crotch of a wearer during wearing of the protector 1 and to constitute the main acquisition area for body fluid that reaches the protector 1.

The incontinence protector 1 further has fastening means 16 for fastening of the incontinence protector 1 inside a supporting pant garment, such as a pair of underpants. The fastening means 16 is in the form of two longitudinally extending bands of pressure sensitive adhesive arranged on the garment-facing surface of the backsheet 4. In Fig. 2, the fastening means 16 is shown to be covered by a releasable protective layer 17. The protective layer may be a siliconized paper, a nonwoven or any other releasable material as is known in the art. Before placing the incontinence protector in the supporting pant

garment, the protective layer is removed from the fastening means 16 to expose the adhesive and make it available for fastening to the pant garment.

The fastening means 16 is optional to the invention and may be omitted, if desired. When using an adhesive fastening means, any suitable adhesive pattern may be used such as full coating of the backsheet, one or more longitudinal adhesive band, transverse bands, dots, circles, curves, stars, etc. Furthermore, the fastening means 16 may be a mechanical fastener such as hook-type fasteners, clips, press studs, etc. or may be a frictional fastener such as a frictional coating or open-celled foam. Combinations of different types of fasteners are also conceivable.

The absorbent core 6 of the incontinence protector 1 shown in Figs. 1 and 2 comprises a first absorbent layer 22 and a second absorbent layer 23. A fluid flow control structure 24 is arranged between the first absorbent layer 22 and the second absorbent layer 23. In the incontinence protector 1 in Figs. 1 and 2, the first absorbent layer 22 is placed beneath and in direct contact with the topsheet 2. Alternative arrangements may be used, as disclosed herein.

The first absorbent layer 22 and the second absorbent layer 23 are shown to have generally rectangular shapes. The second absorbent layer 23 is placed beneath the first absorbent layer 22. The second absorbent layer 23 is somewhat smaller than the first absorbent layer 22 so that the first absorbent layer 22 extends beyond the second absorbent layer 23 forward and rearward in the incontinence protector 1. The size and shape of the absorbent layers may be different from those shown in the figures without departing from the invention. Moreover, the second absorbent layer 23 may be omitted in the absorbent article according to the invention or the article may comprise one or more further absorbent layers.

The first absorbent layer 22 has an opening 25 extending completely through the layer 22 in the crotch portion 15 of the incontinence protector 1. The opening 25 has elongate shape. Without departing from the invention, the shape, size and location of the opening 25 in the first absorbent layer 22 may be different from what is shown in Fig. 1, as described herein.

The topsheet 2 is shown to extend down into the cavity 26 that is defined by the opening 25 in the first absorbent layer 22 and the topsheet-facing surface of the fluid flow control structure 24. The cavity 26 is located in the wetting area of the incontinence protector 1 and will in use be placed directly beneath the urethra and the vaginal opening of a female wearer. Any body fluid that is released to the incontinence protector 1 will directly be collected in the cavity 26 and be temporarily contained therein until it is distributed further into and throughout the absorbent core 6.

A portion of the fluid that is collected in the cavity 26 may be absorbed by the first absorbent layer through the walls of the cavity 26. However, the majority of the fluid will continue downward in the incontinence protector 1, through the bottom of the cavity 26 and into the fluid flow control structure 1 where it is distributed longitudinally and laterally along the flow control structure 24, as described in more detail with reference to Figs 3 and 4.

The fluid flow control structure 24 is shown in Fig. 1 to be of rectangular shape and to be surrounded in the longitudinal and lateral directions by portions of the absorbent core 6. It is generally advantageous if the fluid flow control structure 24 has smaller width and preferably also is shorter than the absorbent core 6.

The components in the incontinence protector 1 may be connected to each other by conventional means such as construction adhesive, heat bonding, ultrasonic bonding, etc. It may not be necessary to bond internal components of the incontinence protector to each other by special bonding means. Hence, it may suffice that such components are held together by frictional forces.

The function of a fluid flow control structure 24 according to the invention and being useful in an absorbent article such as the incontinence protector 1 in Figs. 1 and 2 will now be described with reference to Figs. 3 and 4. The fluid flow control structure 24 in Figs. 3 and 4 is a three-layer structure consisting of a non-perforated fibrous polymeric layer 31 that is sandwiched between a first perforated polymeric layer 32 and a second perforated polymeric layer 33.

The perforated polymeric layers 32,33 are three-dimensionally formed layers. Each layer 32,33 has penetrating apertures 34 that originate in a first surface 32',33' of the layer and

extend towards a second surface 32'',33'' of the layer, with the apexes of the apertures 34 forming protrusions 35 at the second surface 32'',33''. The apertures are tubular structures and are preferably funnel-shaped as seen in Fig. 3. The distance between the first surface 32',33' and the second surface 32'',33'' is the apparent thickness of the respective layers 32,33.

When fluid 36 reaches the first surface 32' of the first perforated polymeric layer 32, it spreads slightly on the surface 32' before passing through the apertures 34 into the non-perforated fibrous polymeric layer 31 as is shown in Fig 3. The non-perforated fibrous polymeric layer 31 offers very little resistance to fluid flow, whereby the fluid runs relatively freely in the layer 31 until it is finally moved by gravity down to the second perforated layer 33 where further downward movement is restricted by the second surface 33'' of the second perforated layer 33. A small amount of fluid may run out of the fluid flow control structure 24 by entering the openings at the apexes of the protrusions 35 on the second perforated layer 33. However, most of the fluid will spread further on the second surface 33'' of the second layer 33 by running in the interconnected channel network 37 that is formed between the protrusions 35, as illustrated in Fig. 4.

The fluid that is captured in the interconnected channel network 37 will generally not exit the fluid flow control structure 24 until it reaches the edges of the fluid flow control structure 24 or when the channel network 37 is saturated with fluid such that the fluid level raises above the height of the protrusions 35. Accordingly, the fluid 36 will be distributed along the second surface 33'' in all directions from the initial point of fluid impact. The apertures 34 may be distributed in the perforated polymeric layers 32,33 so that fluid dispersion takes place to a greater degree in a direction corresponding to the longitudinal direction of the absorbent article in which the fluid flow control structure 24 is placed than in a direction transverse thereto. As shown in Fig. 4, the perforated polymeric layers 32,33 have apertures 34 arranged in staggered rows, such that generally linear channels are formed between the apertures 34 in a longitudinal direction L of the layers 32,33 and non-linear channels are formed in the transverse direction T. Such an arrangement of the apertures 34 in the second perforated polymeric layer 33 serves to promote longitudinal fluid flow in the fluid flow control structure and limit transverse fluid flow.

Fig. 5a-5d illustrate that the first absorbent layer in an absorbent article of the invention may have one or more openings of different shapes and configurations. The particular

configurations shown in Figs. 5a-d should not be regarded as limiting to the invention but are only offered as examples of the many variations that are possible within the scope of the invention. Fig. 5a shows a first absorbent layer having multiple circular openings in the crotch portion of the layer. Fig. 5b shows a first absorbent layer having three elongate openings in the front portion of the layer and a single elongate opening in the rear portion of the layer. Fig. 5c shows a first absorbent layer having an opening shaped as a duck's foot and Fig. 5d shows a first absorbent layer having an H-shaped opening. The layer shown in Fig. 5a may, for instance, be suitable when a large total opening area is desired without compromising the wish of having a coherent layer that will not fall apart or otherwise deform during production of the absorbent article according to the invention. A layer such as shown in Fig. 5b and 5c and having a large open area positioned to the front, may be particulary useful in sanitary napkins for day-time use. The Fig. 5b layer would additionally work well in absorbent articles intended for night-time use where fluid may run rearward between the wearer's buttocks. The Fig. 5d layer may be particularly suited for incontinence protectors where it may be desired to quickly channel fluid from the crotch portion of the absorbent article towards the ends thereof.

Figs. 5a-d are also intended to show that the first absorbent layer, as well as the overall absorbent article may have any suitable shape, as known in the art.

CLAIMS

1. An absorbent article (1) having a longitudinal direction and a transverse direction, side edges (8,9) extending in the longitudinal direction and end edges (11,12) extending in the transverse direction and comprising a fluid permeable topsheet (2), a fluid impermeable backsheet (4) and an absorbent core (6) enclosed between said topsheet (2) and said backsheet (4), said absorbent core (6) comprising a first absorbent layer (22) having an opening (25) extending therethrough, **characterized in that** a fluid flow control structure (24) is arranged between said first absorbent layer (22) and said backsheet (4), said fluid flow control structure (24) being a layered structure comprising a non-perforated fibrous polymeric layer (31) and a first perforated polymeric layer (32), said first perforated polymeric layer (32) having a basis weight of from 50 g/m^2 to150 g/m^2.

2. An absorbent article according to claim 1, wherein the first perforated polymeric layer (32) has a basis weight of from 60 g/m^2 to 100 g/m^2.

3. An absorbent article according to claim 1 or 2, wherein said first perforated polymeric layer (32) is a nonwoven, a film or a film/nonwoven laminate, said first perforated polymeric layer (32) preferably being a nonwoven material.

4. An absorbent article according to claim 1, 2 or 3, wherein said first perforated polymeric layer (32) is a three-dimensionally formed layer having penetrating apertures (34), the apertures (34) preferably being funnel-shaped and extending from a first surface (32') of said layer towards a second surface (32'') of said layer and forming protrusions (35) on said second surface (32'').

5. An absorbent article according to claim 4, wherein said first perforated polymeric layer (32) is arranged with said second surface (32'') facing said non-perforated fibrous polymeric layer (31).

6. An absorbent article according to claim 4, wherein said first perforated polymeric layer (32) is arranged with said second surface (32'') facing away from said non-perforated fibrous polymeric layer (31).

7. An absorbent article according to any one of the preceding claims, wherein the average size of the apertures (34) in said first perforated polymeric layer (32) is 0.5 - 5 mm.

8. An absorbent article according to any one of the preceding claims, wherein the open area of said first perforated polymeric layer (32) is 5-30%, preferably 10-25%.

9. An absorbent article according to any one of the preceding claims, wherein said fluid flow control structure (24) is a three-layer structure consisting of said non-perforated fibrous polymeric layer (31), said first perforated polymeric layer (32) and a second perforated polymeric layer (33), said non-perforated fibrous polymeric layer (31) being sandwiched between said first perforated polymeric layer (32) and said second perforated polymeric layer (33).

10. An absorbent article according to claim 9, wherein said apertures (34) in said first and said second perforated polymeric layers (32,33) are out of register with each other.

11. An absorbent article according to claim 9 or 10, wherein said second perforated polymeric layer (33) has a basis weight of from 50 g/m^2 to 150 g/m^2, preferably a basis weight of from 60 g/m^2 to 100 g/m^2.

12. An absorbent article according to claim 9, 10 or 11, wherein said second perforated polymeric layer (33) is a three-dimensionally formed layer having apertures (34) extending from a first surface (33') of said layer towards a second surface (33") of said layer and forming protrusions (35) on said second surface (33").

13. An absorbent article according to claim 12, wherein said second perforated polymeric layer (33) is arranged with said second surface (33") facing said non-perforated fibrous polymeric layer (31).

14. An absorbent article according to claim 12, wherein said second perforated polymeric layer (33) is arranged with said second surface (32") facing away from said non-perforated fibrous polymeric layer (31).

15. An absorbent article according to any one of claims 9-14, wherein the average size of the apertures (34) in said second perforated polymeric layer (33) is 0.5 - 5 mm.

16. An absorbent article according to any one of claims 9-15, wherein the open area of the second perforated polymeric layer (33) is 5-30%, preferably 10-25%.

17. An absorbent article according to any one of the preceding claims, wherein said second perforated polymeric layer (33) is a nonwoven, a film or a film/nonwoven laminate, said second perforated polymeric layer (33) preferably being a nonwoven material.

18. An absorbent article according to any one of the preceding claims, wherein a second absorbent layer (23) is arranged between said fluid flow control structure (24) and said backsheet (4).

19. An absorbent article according to any one of the preceding claims, wherein the thickness of the flow control structure (24) at 5 kPa is 60-80% of the thickness at 0.5 KPa at a first , second and third compression performed according to the compression test disclosed herein.

20. An absorbent article according to any one of the preceding claims, wherein the bending stiffness of the laminate material in said fluid flow control structure is 0.5 -5 N, preferably 1-4 N, as measured by the modified ASTM D 4032-82 CIRCULAR BEND PROCEDURE.

21. An absorbent article according to any one of the preceding claims, wherein the basis weight of non-perforated fibrous polymeric layer (31) is from 20-120 gsm, preferably from 60-100 gsm.

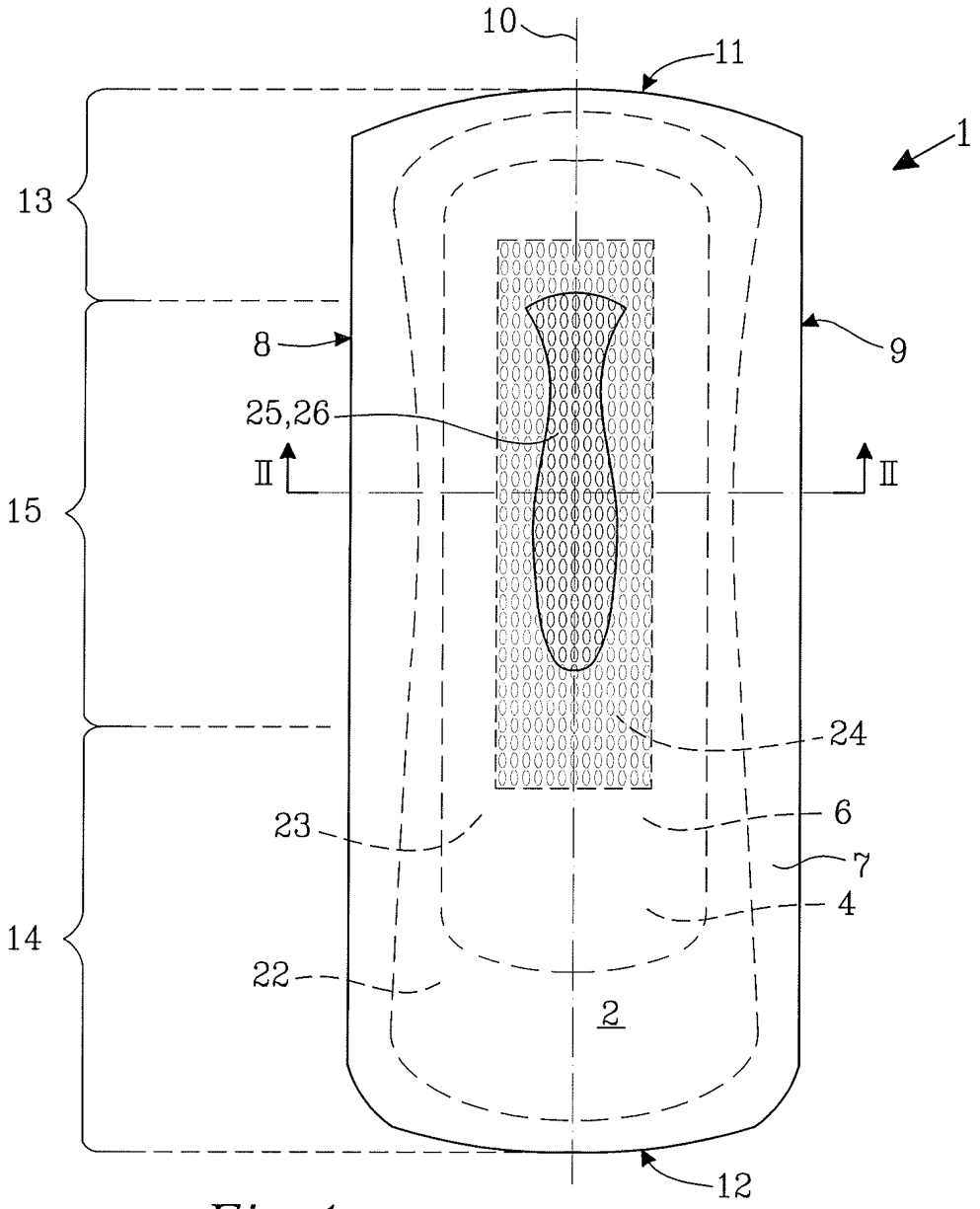
10
11
1
13
8
9
25,26
II
II
15
24
23
6
7
4
14
22
2
12

Fig. 1

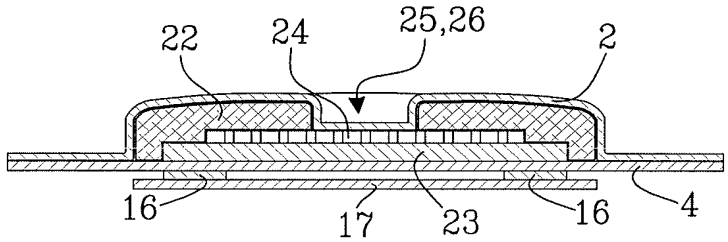
22
24
25,26
2
16
17
23
16
4

Fig. 2

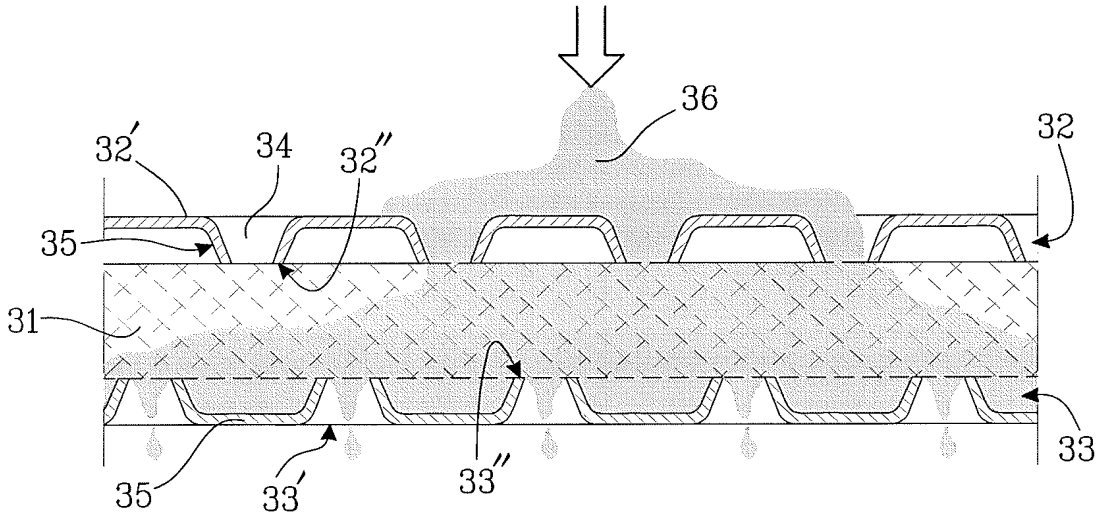

Fig.3

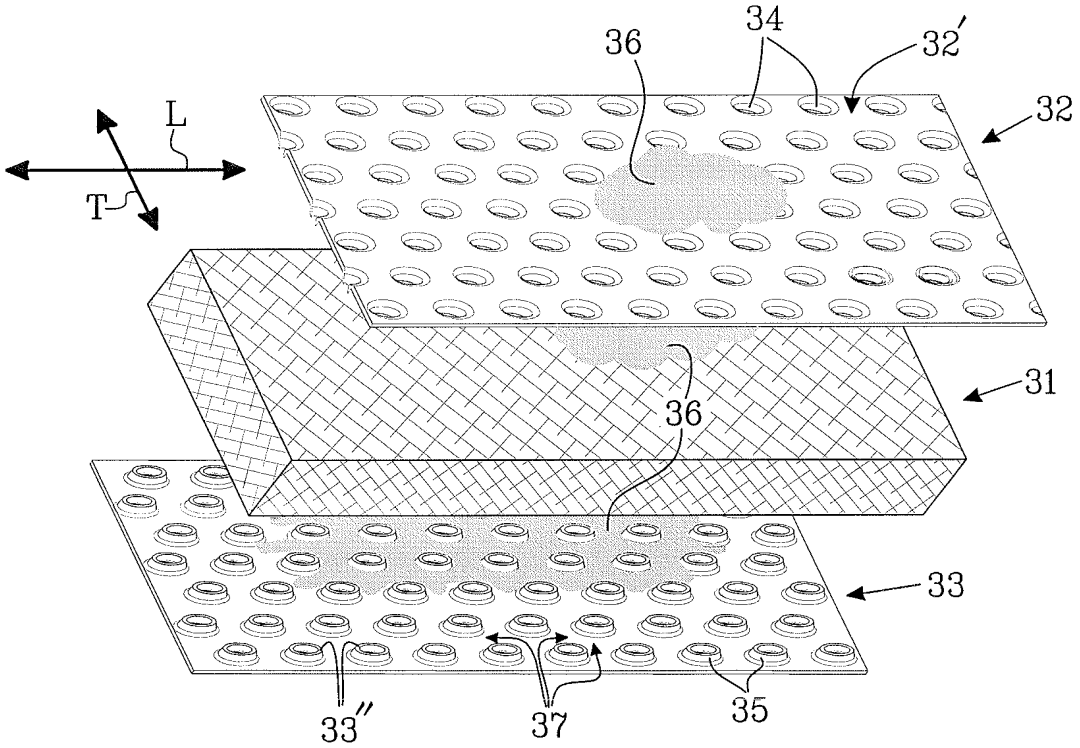

Fig.4

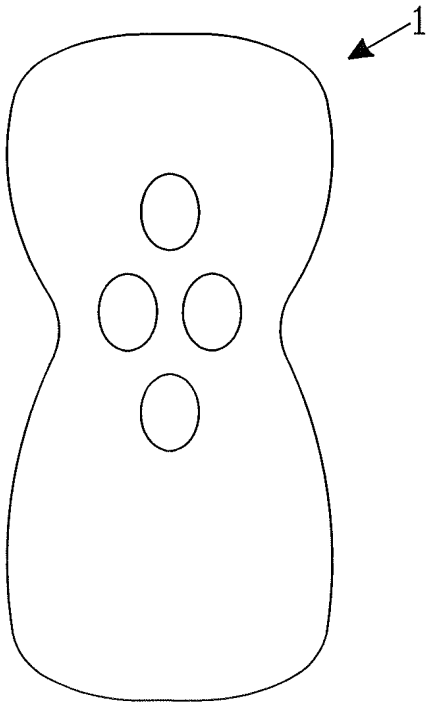

Fig.5a

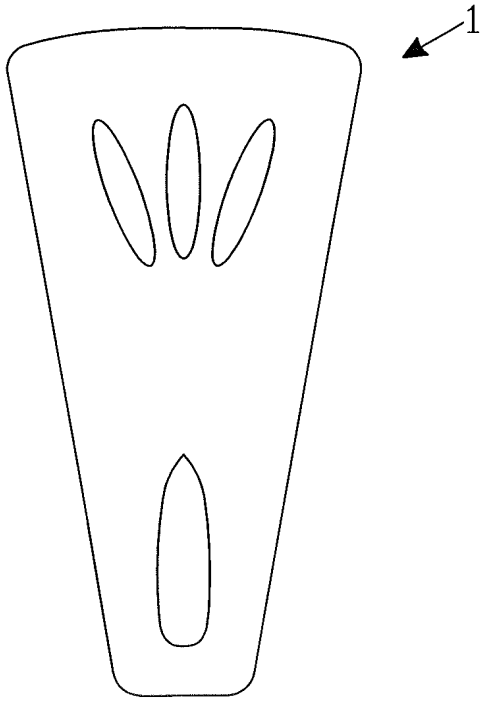

Fig.5b

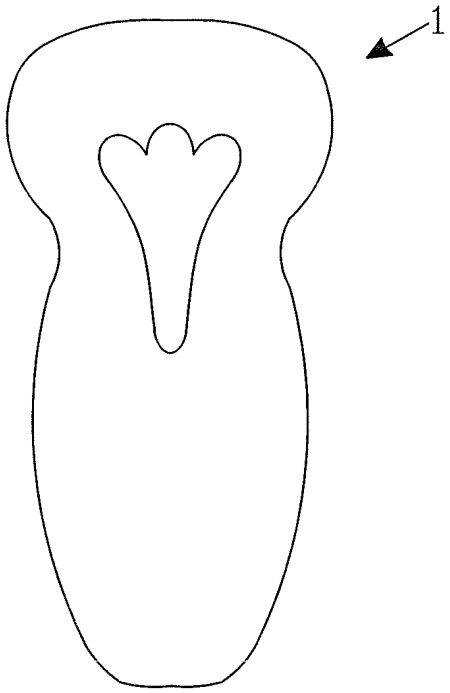

Fig.5c

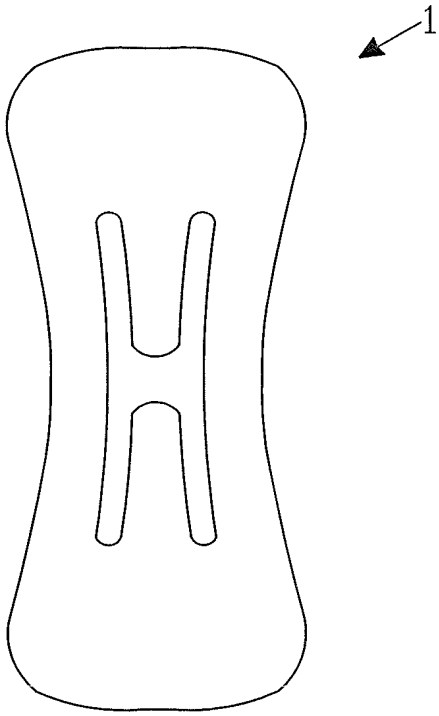

Fig.5d

INTERNATIONAL SEARCH REPORT

International application No.
PCT/SE2011/050859

A. CLASSIFICATION OF SUBJECT MATTER

IPC: see extra sheet

According to International Patent Classification (IPC) or to both national classification and IPC

B. FIELDS SEARCHED

Minimum documentation searched (classification system followed by classification symbols)

IPC: A61F

Documentation searched other than minimum documentation to the extent that such documents are included in the fields searched

SE, DK, FI, NO classes as above

Electronic data base consulted during the international search (name of data base and, where practicable, search terms used)

EPO-Internal, PAJ, WPI data

C. DOCUMENTS CONSIDERED TO BE RELEVANT

Category*	Citation of document, with indication, where appropriate, of the relevant passages	Relevant to claim No.
X	US 6241714 B1 (RAIDEL MARIA ET AL), 5 June 2001 (2001-06-05); abstract; column 7, line 1 - line 19; column 9, line 19 - line 50; figures 1-11	1-8, 11-21
Y	--	9-10
A	US 20050267429 A1 (COHEN RICHMOND R), 1 December 2005 (2005-12-01); abstract; figure 1; claim 8 --	1-21
A	EP 1403037 A1 (JAPAN ABSORBENT TECH INST), 31 March 2004 (2004-03-31); abstract; figures 3,4,8; [0026] --	1-21

☒ Further documents are listed in the continuation of Box C.

☒ See patent family annex.

* Special categories of cited documents:

"A" document defining the general state of the art which is not considered to be of particular relevance

"E" earlier application or patent but published on or after the international filing date

"L" document which may throw doubts on priority claim(s) or which is cited to establish the publication date of another citation or other special reason (as specified)

"O" document referring to an oral disclosure, use, exhibition or other means

"P" document published prior to the international filing date but later than the priority date claimed

"T" later document published after the international filing date or priority date and not in conflict with the application but cited to understand the principle or theory underlying the invention

"X" document of particular relevance; the claimed invention cannot be considered novel or cannot be considered to involve an inventive step when the document is taken alone

"Y" document of particular relevance; the claimed invention cannot be considered to involve an inventive step when the document is combined with one or more other such documents, such combination being obvious to a person skilled in the art

"&" document member of the same patent family

Date of the actual completion of the international search	Date of mailing of the international search report
08-02-2012	21-02-2012
Name and mailing address of the ISA/SE Patent- och registreringsverket Box 5055 S-102 42 STOCKHOLM Facsimile No. + 46 8 666 02 86	Authorized officer Monika Bohlin Telephone No. + 46 8 782 25 00

C (Continuation). DOCUMENTS CONSIDERED TO BE RELEVANT

Category*	Citation of document, with indication, where appropriate, of the relevant passages	Relevant to claim No.
Y	WO 2005084596 A1 (SCA HYGIENE PROD AB ET AL), 15 September 2005 (2005-09-15); abstract; page 1, line 29 - page 2, line 2; page 14, line 8 - line 31; page 17, line 4 - line 12; figures 2-7 --	9-10
A	WO 0059431 A1 (KIMBERLY CLARK CO), 12 October 2000 (2000-10-12); abstract; page 24, line 14 - page 25, line 8; figures 7,10 --	1-21
A	WO 0224133 A1 (TREDEGAR FILM PROD CORP), 28 March 2002 (2002-03-28); abstract; figures 1-12 --	1-21
A	WO 2005079542 A2 (TREDEGAR FILM PROD CORP), 1 September 2005 (2005-09-01); abstract; figures 1-5 --	1-21
A	WO 9734559 A1 (PROCTER & GAMBLE), 25 September 1997 (1997-09-25); abstract; page 31, line 1 - line 5; page 35, line 20 - page 36, line 2; figure 5 --	1-21
A	WO 0019955 A2 (KIMBERLY CLARK CO), 13 April 2000 (2000-04-13); abstract; figures 1-3; claims 1-8 --	1-21
A	WO 9747263 A1 (PROCTER & GAMBLE), 18 December 1997 (1997-12-18); abstract; page 20, line 6 - line 20; figures 2,6 --	1-21
A	US 4988344 A (REISING GEORGE S ET AL), 29 January 1991 (1991-01-29); abstract; figure 3 --	1-21
A	US 5957906 A (ROE DONALD C ET AL), 28 September 1999 (1999-09-28); abstract; figure 6A --	1-21
A	FR 2044554 A (WUHRLIN JEAN), 19 February 1971 (1971-02-19); figure 2; claims 1-4 --	1-21

INTERNATIONAL SEARCH REPORT

International application No.
PCT/SE2011/050859

C (Continuation). DOCUMENTS CONSIDERED TO BE RELEVANT

Category*	Citation of document, with indication, where appropriate, of the relevant passages	Relevant to claim No.
A	WO 0172251 A1 (KIMBERLY CLARK CO), 4 October 2001 (2001-10-04); abstract; figures 5-7 -- --------	1-21

Continuation of: second sheet

International Patent Classification (IPC)

A61F 13/537 (2006.01)
A61F 13/535 (2006.01)
A61F 13/539 (2006.01)

Download your patent documents at www.prv.se

The cited patent documents can be downloaded:

- From "Cited documents" found under our online services at www.prv.se (English version)
- From "Anförda dokument" found under "e-tjänster" at www.prv.se (Swedish version)

Use the application number as username. The password is **PLMPRTRFSZ**.

Paper copies can be ordered at a cost of 50 SEK per copy from PRV InterPat (telephone number 08-782 28 85).

Cited literature, if any, will be enclosed in paper form.

US	6241714	B1	05/06/2001	AU	718800	B2	20/04/2000
				AU	2096197	A	01/10/1997
				BR	9707965	A	27/07/1999
				CA	2247977	A1	18/09/1997
				CN	1165269	C	08/09/2004
				CN	1213288	A	07/04/1999
				CZ	9802890	A3	17/02/1999
				DE	19609462	A1	18/09/1997
				EP	0888103	A1	07/01/1999
				ES	2176690	T3	01/12/2002
				JP	2000507126	A	13/06/2000
				PA	8426201	A1	24/05/2000
				TW	392500	U	01/06/2000
				WO	9733546	A1	18/09/1997
				ZA	9701822	A	04/09/1997
US	20050267429	A1	01/12/2005	CA	2568132	A1	08/12/2005
				EP	1748751	A4	24/03/2010
				WO	2005115294	A3	28/09/2006
EP	1403037	A1	31/03/2004	BR	0209454	A	06/07/2004
				CN	1230294	C	07/12/2005
				CN	1505560	A	16/06/2004
				JP	4175114	B2	05/11/2008
				MX	PA03010068	A	02/04/2004
				US	20040102124	A1	27/05/2004
				WO	02090106	B1	23/01/2003
WO	2005084596	A1	15/09/2005	NONE			
WO	0059431	A1	12/10/2000	AT	330570	T	15/07/2006
				AU	762414	B2	26/06/2003
				AU	3933000	A	23/10/2000
				BR	0009546	A	26/12/2001
				CA	2362308	A1	12/10/2000
				CN	1165267	C	08/09/2004
				CN	1346255	A	24/04/2002
				DE	60028954	D1	03/08/2006
				EG	22782	A	31/08/2003
				EP	1171067	B1	21/06/2006
				ID	30474	A	13/12/2001
				JP	2002540848	A	03/12/2002
				PL	349917	A1	07/10/2002
				TR	200102870	T2	21/01/2002
				US	6348253	B1	19/02/2002

WO	0224133	A1	28/03/2002	AT	283015	T	15/12/2004
				AU	9114001	A	02/04/2002
				BR	0114090	A	22/07/2003
				CA	2422756	A1	28/03/2002
				CN	1471380	A	28/01/2004
				CN	1201711	C	18/05/2005
				DE	60107447	T2	08/12/2005
				EP	1318781	B1	24/11/2004
				ES	2233688	T3	16/06/2005
				HU	0303366	A2	28/01/2004
				JP	2008155035	A	10/07/2008
				JP	4377127	B2	02/12/2009
				JP	2004508892	A	25/03/2004
				MX	PA03002467	A	10/09/2004
				PL	360694	A1	20/09/2004
				US	20040002688	A1	01/01/2004
				US	20030195487	A1	16/10/2003
				US	20030093048	A1	15/05/2003
				US	7378568	B2	27/05/2008
				US	20020062113	A1	23/05/2002
				US	6700036	B2	02/03/2004
				US	6610904	B1	26/08/2003
WO	2005079542	A2	01/09/2005	NONE			

WO	9734559	A1	25/09/1997	AT	280560	T	15/11/2004
				AU	2580197	A	10/10/1997
				BR	9708144	A	27/07/1999
				CA	2249322	C	14/01/2003
				CN	1218384	A	02/06/1999
				CO	4790146	A1	31/05/1999
				CZ	9803023	A3	17/02/1999
				CZ	287990	B6	14/03/2001
				DE	69731403	T2	09/02/2006
				EG	21953	A	30/04/2002
				EP	0959850	A1	01/12/1999
				ES	2227685	T3	01/04/2005
				HU	222066	B1	28/04/2003
				HU	9902447	A3	28/12/1999
				ID	16783	A	13/11/1997
				JP	3249535	B2	21/01/2002
				JP	H11506963	A	22/06/1999
				NO	984405	A	23/11/1998
				TR	9801882	T2	21/12/1998
				US	6372952	B1	16/04/2002
				ZA	9702243	A	17/09/1997
WO	0019955	A2	13/04/2000	AU	6499999	A	26/04/2000
				BR	9914225	A	26/06/2001
				CA	2345608	A1	13/04/2000
				CN	1367674	A	04/09/2002
				CN	1213710	C	10/08/2005
				CO	5121067	A1	30/01/2002
				EP	1119328	A2	01/08/2001
				JP	2003521955	A	22/07/2003
				KR	20010085873	A	07/09/2001
				MX	PA01003402	A	01/01/2002
				PA	8483701	A1	29/09/2000
				SV	1999000172	A	06/07/2000
				TW	482664	B	11/04/2002
				US	7429689	B2	30/09/2008
				US	6673982	B1	06/01/2004
				US	20040102752	A1	27/05/2004
				ZA	200102549	A	26/03/2002

WO	9747263	A1	18/12/1997	AT	253881	T	15/11/2003
				AU	3568997	A	07/01/1998
				CA	2257690	C	25/03/2003
				DE	69726152	T2	02/09/2004
				EP	0912152	B1	12/11/2003
				ID	19853	A	13/08/1998
				JP	2000512183	A	19/09/2000
				KR	20000016609	A	25/03/2000
				US	5827254	A	27/10/1998
				ZA	9705213	A	19/02/1998
US	4988344	A	29/01/1991	CA	1328952	C	03/05/1994
				DE	68914327	D1	11/05/1994
				EP	0343941	A2	29/11/1989
				ES	2050798	T3	01/06/1994
				JP	2060646	A	01/03/1990
				JP	2907867	B2	21/06/1999
US	5957906	A	28/09/1999	US	6410820	B1	25/06/2002
				ZA	9810376	A	14/05/1999
FR	2044554	A	19/02/1971	NONE			
WO	0172251	A1	04/10/2001	AR	028271	A1	30/04/2003
				AU	4933201	A	08/10/2001
				BR	0108683	A	21/02/2006
				CN	1419433	A	21/05/2003
				EP	1267776	A1	02/01/2003
				JP	2004501676	A	22/01/2004
				MX	PA02008668	A	24/02/2003
				ZA	200206308	A	09/07/2004

PTO/SB/20PCT-EP (05-10)
Approved for use through 01/31/2015. OMB 0651-0058
U.S. Patent and Trademark Office; U.S DEPARTMENT OF COMMERCE

Under the Paperwork Reduction Act of 1995, no persons are required to respond to a collection of information unless it displays a valid OMB control number.

REQUEST FOR PARTICIPATION IN THE PATENT COOPERATION TREATY – PATENT PROSECUTION HIGHWAY (PCT-PPH) PILOT PROGRAM BETWEEN THE EUROPEAN PATENT OFFICE (EPO) AND THE USPTO

Application No.:	14/129,401	First Named Inventor:	Patrik Andersson
Filing Date:	December 26, 2013	Attorney Docket No.:	049121-0366-00-US (504907)
Title of the Invention:	ABSORBENT ARTICLE HAVING INTAKE STRUCTURE		

THIS REQUEST FOR PARTICIPATION IN THE PCT-PPH PILOT PROGRAM ALONG WITH THE REQUIRED DOCUMENTS MUST BE SUBMITTED VIA EFS-WEB. INFORMATION REGARDING EFS-WEB IS AVAILABLE AT HTTP://WWW.USPTO.GOV/EBC/EFS_HELP.HTML.

APPLICANT HEREBY REQUESTS PARTICIPATION IN THE PCT-PPH PILOT PROGRAM AND PETITIONS TO MAKE THE ABOVE-IDENTIFIED APPLICATION SPECIAL UNDER THE PCT-PPH PILOT PROGRAM.

The above-identified application is (1) a national stage entry of the corresponding PCT application, or (2) a national stage entry of another PCT application which claims priority to the corresponding PCT application, or (3) a national application that claims domestic/ foreign priority to the corresponding PCT application, or (4) a national application which forms the basis for the priority claim in the corresponding PCT application, or (5) a continuing application of a U.S. application that satisfies one of (1) to (4) above, or (6) a U.S. application that claims domestic benefit to a U.S. provisional application which forms the basis for the priority claim in the corresponding PCT application.

The corresponding PCT application number(s) is/are: PCT/SE2011/050859

The international filing date of the corresponding PCT application(s) is/are: June 28, 2011

I. List of Required Documents:

a. **A copy of the latest international work product (WO/ISA, WO/IPEA, or IPER) in the above-identified corresponding PCT application(s)**

☐ is attached.

☑ is not attached because the document is already in the U.S. application.

b. **A copy of all claims which were indicated as having novelty, inventive step and industrial applicability in the above-identified corresponding PCT application(s)**

☐ is attached.

☑ is not attached because the document is already in the U.S. application.

c. **English translations of the documents in a. and b. above are attached (if the documents are not in the English language). A statement that the English translation is accurate is attached for the document in b. above.**

d. **(1) An information disclosure statement listing the documents cited in the international work products (ISR, WO/ISA, WO/IPEA, IPER) of the corresponding PCT application.**

☐ is attached.

☑ has already been filed in the above-identified U.S. application on December 26, 2013

(2) Copies of all documents (except for U.S. patents or U.S. patent application publications)

☐ are attached.

☑ have already been filed in the above-identified U.S. application on December 26, 2013

This collection of information is required by 35 U.S.C. 119, 37 CFR 1.55, and 37 CFR 1.102(d). The information is required to obtain or retain a benefit by the public, which is to file (and by the USPTO to process) an application. Confidentiality is governed by 35 U.S.C. 122 and 37 CFR 1.11 and 1.14. This collection is estimated to take 2 hours to complete, including gathering, preparing, and submitting the completed application form to the USPTO. Time will vary depending upon the individual case. Any comments on the amount of time you require to complete this form and/or suggestions for reducing this burden should be sent to the Chief Information Officer, U.S. Patent and Trademark Office, U.S. Department of Commerce, P.O. Box 1450, Alexandria, VA 22313-1450. DO NOT SEND FEES OR COMPLETED FORMS TO THIS ADDRESS.

Under the Paperwork Reduction Act of 1995, no persons are required to respond to a collection of information unless it displays a valid OMB control number.

REQUEST FOR PARTICIPATION IN THE PCT-PPH PILOT PROGRAM BETWEEN THE EPO AND THE USPTO

(continued)

Application No.:	14/129,401	First Named Inventor:	Patrik Andersson

II. Claims Correspondence Table:

Claims in US Application	Patentable Claims in the corresponding PCT application	Explanation regarding the correspondence
1	1	substantially the same
2	2	substantially the same
3	3	substantially the same, except multiple dependencies removed
4	4	substantially the same, except multiple dependencies removed
5	5	substantially the same
6	6	substantially the same
7	7	substantially the same, except multiple dependencies removed
8	8	substantially the same, except multiple dependencies removed
9	9	substantially the same, except multiple dependencies removed
10	10	substantially the same
11	11	substantially the same, except multiple dependencies removed
12	12	substantially the same, except multiple dependencies removed
13	13	substantially the same
14	14	substantially the same
15	15	substantially the same, except multiple dependencies removed
16	16	substantially the same, except multiple dependencies removed
17	17	substantially the same, except multiple dependencies removed
18	18	substantially the same, except multiple dependencies removed
19	19	substantially the same, except multiple dependencies removed
20	20	substantially the same, except multiple dependencies removed
21	21	substantially the same, except multiple dependencies removed

III. All the claims in the US application sufficiently correspond to the patentable claims in the corresponding PCT application.

Signature	Christopher P Bruenjes	Date	January 8, 2014
Name (Print/Typed)	Christopher P. Bruenjes	Registration Number	62,941

Privacy Act Statement

The **Privacy Act of 1974 (P.L. 93-579)** requires that you be given certain information in connection with your submission of the attached form related to a patent application or patent. Accordingly, pursuant to the requirements of the Act, please be advised that: (1) the general authority for the collection of this information is 35 U.S.C. 2(b)(2); (2) furnishing of the information solicited is voluntary; and (3) the principal purpose for which the information is used by the U.S. Patent and Trademark Office is to process and/or examine your submission related to a patent application or patent. If you do not furnish the requested information, the U.S. Patent and Trademark Office may not be able to process and/or examine your submission, which may result in termination of proceedings or abandonment of the application or expiration of the patent.

The information provided by you in this form will be subject to the following routine uses:

1. The information on this form will be treated confidentially to the extent allowed under the Freedom of Information Act (5 U.S.C. 552) and the Privacy Act (5 U.S.C 552a). Records from this system of records may be disclosed to the Department of Justice to determine whether disclosure of these records is required by the Freedom of Information Act.
2. A record from this system of records may be disclosed, as a routine use, in the course of presenting evidence to a court, magistrate, or administrative tribunal, including disclosures to opposing counsel in the course of settlement negotiations.
3. A record in this system of records may be disclosed, as a routine use, to a Member of Congress submitting a request involving an individual, to whom the record pertains, when the individual has requested assistance from the Member with respect to the subject matter of the record.
4. A record in this system of records may be disclosed, as a routine use, to a contractor of the Agency having need for the information in order to perform a contract. Recipients of information shall be required to comply with the requirements of the Privacy Act of 1974, as amended, pursuant to 5 U.S.C. 552a(m).
5. A record related to an International Application filed under the Patent Cooperation Treaty in this system of records may be disclosed, as a routine use, to the International Bureau of the World Intellectual Property Organization, pursuant to the Patent Cooperation Treaty.
6. A record in this system of records may be disclosed, as a routine use, to another federal agency for purposes of National Security review (35 U.S.C. 181) and for review pursuant to the Atomic Energy Act (42 U.S.C. 218(c)).
7. A record from this system of records may be disclosed, as a routine use, to the Administrator, General Services, or his/her designee, during an inspection of records conducted by GSA as part of that agency's responsibility to recommend improvements in records management practices and programs, under authority of 44 U.S.C. 2904 and 2906. Such disclosure shall be made in accordance with the GSA regulations governing inspection of records for this purpose, and any other relevant (*i.e.*, GSA or Commerce) directive. Such disclosure shall not be used to make determinations about individuals.
8. A record from this system of records may be disclosed, as a routine use, to the public after either publication of the application pursuant to 35 U.S.C. 122(b) or issuance of a patent pursuant to 35 U.S.C. 151. Further, a record may be disclosed, subject to the limitations of 37 CFR 1.14, as a routine use, to the public if the record was filed in an application which became abandoned or in which the proceedings were terminated and which application is referenced by either a published application, an application open to public inspection or an issued patent.
9. A record from this system of records may be disclosed, as a routine use, to a Federal, State, or local law enforcement agency, if the USPTO becomes aware of a violation or potential violation of law or regulation.

Electronic Acknowledgement Receipt

EFS ID:	17851704
Application Number:	14129401
International Application Number:	
Confirmation Number:	4049
Title of Invention:	ABSORBENT ARTICLE HAVING INTAKE STRUCTURE
First Named Inventor/Applicant Name:	Patrik ANDERSSON
Customer Number:	105855
Filer:	Christopher P. Bruenjes/Margit Phillips
Filer Authorized By:	Christopher P. Bruenjes
Attorney Docket Number:	049121-0366-00-US-504907
Receipt Date:	08-JAN-2014
Filing Date:	
Time Stamp:	13:21:44
Application Type:	U.S. National Stage under 35 USC 371

Payment information:

Submitted with Payment	no

File Listing:

Document Number	Document Description	File Name	File Size(Bytes)/ Message Digest	Multi Part /.zip	Pages (if appl.)
1	Petition to make Special under PCT-Patent Pros Hwy	049121_0366_504907_Petition_to_make_Special.pdf	545412 6f2d55ae1933e439856e7f9d009cdcdff9b11f25	no	3

Warnings:

Information:

Total Files Size (in bytes):	545412

This Acknowledgement Receipt evidences receipt on the noted date by the USPTO of the indicated documents, characterized by the applicant, and including page counts, where applicable. It serves as evidence of receipt similar to a Post Card, as described in MPEP 503.

New Applications Under 35 U.S.C. 111
If a new application is being filed and the application includes the necessary components for a filing date (see 37 CFR 1.53(b)-(d) and MPEP 506), a Filing Receipt (37 CFR 1.54) will be issued in due course and the date shown on this Acknowledgement Receipt will establish the filing date of the application.

National Stage of an International Application under 35 U.S.C. 371
If a timely submission to enter the national stage of an international application is compliant with the conditions of 35 U.S.C. 371 and other applicable requirements a Form PCT/DO/EO/903 indicating acceptance of the application as a national stage submission under 35 U.S.C. 371 will be issued in addition to the Filing Receipt, in due course.

New International Application Filed with the USPTO as a Receiving Office
If a new international application is being filed and the international application includes the necessary components for an international filing date (see PCT Article 11 and MPEP 1810), a Notification of the International Application Number and of the International Filing Date (Form PCT/RO/105) will be issued in due course, subject to prescriptions concerning national security, and the date shown on this Acknowledgement Receipt will establish the international filing date of the application.

UNITED STATES PATENT AND TRADEMARK OFFICE

UNITED STATES DEPARTMENT OF COMMERCE
United States Patent and Trademark Office
Address: COMMISSIONER FOR PATENTS
P.O. Box 1450
Alexandria, Virginia 22313-1450
www.uspto.gov

U.S. APPLICATION NUMBER NO.	FIRST NAMED APPLICANT	ATTY. DOCKET NO.
14/129,401	Patrik Andersson	049121-0366-00-US-504907

105855
Drinker Biddle & Reath LLP
1500 K Street NW, Suite 1100
Washington, DC 20005

INTERNATIONAL APPLICATION NO.	
PCT/SE2011/050859	
I.A. FILING DATE	PRIORITY DATE
06/28/2011	

CONFIRMATION NO. 4049
371 ACCEPTANCE LETTER

OC000000066266214

Date Mailed: 01/29/2014

NOTICE OF ACCEPTANCE OF APPLICATION UNDER 35 U.S.C 371 AND 37 CFR 1.495

The applicant is hereby advised that the United States Patent and Trademark Office, in its capacity as a Designated / Elected Office (37 CFR 1.495), has ACCEPTED the above identified international application for national patentability examination in the United States Patent and Trademark Office.

The United States Application Number assigned to the application is shown above and the relevant dates are:

12/26/2013	12/26/2013
DATE OF RECEIPT OF 35 U.S.C. 371(c)(1) and (c)(2) REQUIREMENTS	DATE OF COMPLETION OF ALL 35 U.S.C. 371 REQUIREMENTS

A Filing Receipt (PTO-103X) will be issued for the present application in due course. **THE DATE APPEARING ON THE FILING RECEIPT AS THE " FILING DATE" IS THE DATE ON WHICH THE LAST OF THE 35 U.S.C. 371 (c)(1), (c)(2) and (c)(4) REQUIREMENTS HAS BEEN RECEIVED IN THE OFFICE. THIS DATE IS SHOWN ABOVE.** *The filing date of the above identified application is the international filing date of the international application (Article 11(3) and 35 U.S.C. 363).*

The following items have been received:

- Copy of the International Application filed on 12/26/2013
- Copy of the International Search Report filed on 12/26/2013
- Copy of IPE Report filed on 12/26/2013
- Preliminary Amendments filed on 12/26/2013
- Information Disclosure Statements filed on 12/26/2013
- Inventor's Oath or Declaration filed on 12/26/2013
- Request for Immediate Examination filed on 12/26/2013
- U.S. Basic National Fees filed on 12/26/2013
- Substitute Specification filed on 12/26/2013
- Application Data Sheet (37 CFR 1.76) filed on 12/26/2013

Applicant is reminded that any communications to the United States Patent and Trademark Office must be mailed to the address given in the heading and include the U.S. application no. shown above (37 CFR 1.5)

CHARITTA A SHELTON

Telephone: (571) 272-3926

UNITED STATES PATENT AND TRADEMARK OFFICE

UNITED STATES DEPARTMENT OF COMMERCE
United States Patent and Trademark Office
Address: COMMISSIONER FOR PATENTS
P.O. Box 1450
Alexandria, Virginia 22313-1450
www.uspto.gov

APPLICATION NUMBER	FILING or 371(c) DATE	GRP ART UNIT	FIL FEE REC'D	ATTY.DOCKET.NO	TOT CLAIMS	IND CLAIMS
14/129,401	12/26/2013		1560	049121-0366-00-US-504907	21	1

CONFIRMATION NO. 4049

105855
Drinker Biddle & Reath LLP
1500 K Street NW, Suite 1100
Washington, DC 20005

FILING RECEIPT

OC000000066266213

Date Mailed: 01/29/2014

Receipt is acknowledged of this non-provisional patent application. The application will be taken up for examination in due course. Applicant will be notified as to the results of the examination. Any correspondence concerning the application must include the following identification information: the U.S. APPLICATION NUMBER, FILING DATE, NAME OF APPLICANT, and TITLE OF INVENTION. Fees transmitted by check or draft are subject to collection. Please verify the accuracy of the data presented on this receipt. **If an error is noted on this Filing Receipt, please submit a written request for a Filing Receipt Correction. Please provide a copy of this Filing Receipt with the changes noted thereon. If you received a "Notice to File Missing Parts" for this application, please submit any corrections to this Filing Receipt with your reply to the Notice. When the USPTO processes the reply to the Notice, the USPTO will generate another Filing Receipt incorporating the requested corrections**

Inventor(s)

Patrik Andersson, Billdal, SWEDEN;
Malin Lundman, Molnlycke, SWEDEN;
Per Bergstrom, Goteborg, SWEDEN;

Applicant(s)

Patrik Andersson, Billdal, SWEDEN;
Malin Lundman, Molnlycke, SWEDEN;
Per Bergstrom, Goteborg, SWEDEN;

Assignment For Published Patent Application

SCA HYGIENE PRODUCTS AB, Goteborg, SE

Power of Attorney: The patent practitioners associated with Customer Number 105855

Domestic Priority data as claimed by applicant

This application is a 371 of PCT/SE2011/050859 06/28/2011

Foreign Applications for which priority is claimed (You may be eligible to benefit from the **Patent Prosecution Highway** program at the USPTO. Please see http://www.uspto.gov for more information.) - None.
Foreign application information must be provided in an Application Data Sheet in order to constitute a claim to foreign priority. See 37 CFR 1.55 and 1.76.

If Required, Foreign Filing License Granted: 01/25/2014
The country code and number of your priority application, to be used for filing abroad under the Paris Convention, is **US 14/129,401**
Projected Publication Date: 05/08/2014
Non-Publication Request: No

Early Publication Request: No
Title

ABSORBENT ARTICLE HAVING INTAKE STRUCTURE

Preliminary Class

Statement under 37 CFR 1.55 or 1.78 for AIA (First Inventor to File) Transition Applications: No

PROTECTING YOUR INVENTION OUTSIDE THE UNITED STATES

Since the rights granted by a U.S. patent extend only throughout the territory of the United States and have no effect in a foreign country, an inventor who wishes patent protection in another country must apply for a patent in a specific country or in regional patent offices. Applicants may wish to consider the filing of an international application under the Patent Cooperation Treaty (PCT). An international (PCT) application generally has the same effect as a regular national patent application in each PCT-member country. The PCT process **simplifies** the filing of patent applications on the same invention in member countries, but **does not result** in a grant of "an international patent" and does not eliminate the need of applicants to file additional documents and fees in countries where patent protection is desired.

Almost every country has its own patent law, and a person desiring a patent in a particular country must make an application for patent in that country in accordance with its particular laws. Since the laws of many countries differ in various respects from the patent law of the United States, applicants are advised to seek guidance from specific foreign countries to ensure that patent rights are not lost prematurely.

Applicants also are advised that in the case of inventions made in the United States, the Director of the USPTO must issue a license before applicants can apply for a patent in a foreign country. The filing of a U.S. patent application serves as a request for a foreign filing license. The application's filing receipt contains further information and guidance as to the status of applicant's license for foreign filing.

Applicants may wish to consult the USPTO booklet, "General Information Concerning Patents" (specifically, the section entitled "Treaties and Foreign Patents") for more information on timeframes and deadlines for filing foreign patent applications. The guide is available either by contacting the USPTO Contact Center at 800-786-9199, or it can be viewed on the USPTO website at http://www.uspto.gov/web/offices/pac/doc/general/index.html.

For information on preventing theft of your intellectual property (patents, trademarks and copyrights), you may wish to consult the U.S. Government website, http://www.stopfakes.gov. Part of a Department of Commerce initiative, this website includes self-help "toolkits" giving innovators guidance on how to protect intellectual property in specific countries such as China, Korea and Mexico. For questions regarding patent enforcement issues, applicants may call the U.S. Government hotline at 1-866-999-HALT (1-866-999-4258).

LICENSE FOR FOREIGN FILING UNDER

Title 35, United States Code, Section 184

Title 37, Code of Federal Regulations, 5.11 & 5.15

GRANTED

The applicant has been granted a license under 35 U.S.C. 184, if the phrase "IF REQUIRED, FOREIGN FILING LICENSE GRANTED" followed by a date appears on this form. Such licenses are issued in all applications where the conditions for issuance of a license have been met, regardless of whether or not a license may be required as set forth in 37 CFR 5.15. The scope and limitations of this license are set forth in 37 CFR 5.15(a) unless an earlier license has been issued under 37 CFR 5.15(b). The license is subject to revocation upon written notification. The date indicated is the effective date of the license, unless an earlier license of similar scope has been granted under 37 CFR 5.13 or 5.14.

This license is to be retained by the licensee and may be used at any time on or after the effective date thereof unless it is revoked. This license is automatically transferred to any related applications(s) filed under 37 CFR 1.53(d). This license is not retroactive.

The grant of a license does not in any way lessen the responsibility of a licensee for the security of the subject matter as imposed by any Government contract or the provisions of existing laws relating to espionage and the national security or the export of technical data. Licensees should apprise themselves of current regulations especially with respect to certain countries, of other agencies, particularly the Office of Defense Trade Controls, Department of State (with respect to Arms, Munitions and Implements of War (22 CFR 121-128)); the Bureau of Industry and Security, Department of Commerce (15 CFR parts 730-774); the Office of Foreign AssetsControl, Department of Treasury (31 CFR Parts 500+) and the Department of Energy.

NOT GRANTED

No license under 35 U.S.C. 184 has been granted at this time, if the phrase "IF REQUIRED, FOREIGN FILING LICENSE GRANTED" DOES NOT appear on this form. Applicant may still petition for a license under 37 CFR 5.12, if a license is desired before the expiration of 6 months from the filing date of the application. If 6 months has lapsed from the filing date of this application and the licensee has not received any indication of a secrecy order under 35 U.S.C. 181, the licensee may foreign file the application pursuant to 37 CFR 5.15(b).

SelectUSA

The United States represents the largest, most dynamic marketplace in the world and is an unparalleled location for business investment, innovation, and commercialization of new technologies. The U.S. offers tremendous resources and advantages for those who invest and manufacture goods here. Through SelectUSA, our nation works to promote and facilitate business investment. SelectUSA provides information assistance to the international investor community; serves as an ombudsman for existing and potential investors; advocates on behalf of U.S. cities, states, and regions competing for global investment; and counsels U.S. economic development organizations on investment attraction best practices. To learn more about why the United States is the best country in the world to develop technology, manufacture products, deliver services, and grow your business, visit http://www.SelectUSA.gov or call +1-202-482-6800.

MULTIPLE DEPENDENT CLAIM FEE CALCULATION SHEET

Substitute for Form PTO-1360
(For use with Form PTO/SB/06)

Application Number: 14129401

Filing Date:

Applicant(s): Patrik ANDERSSON

* May be used for additional claims or amendments

CLAIMS	AS FILED		AFTER FIRST AMENDMENT		AFTER SECOND AMENDMENT	
	Indep	Depend	Indep	Depend	Indep	Depend
1	1		1			
2		1		1		
3		1		1		
4		(1)		1		
5		(1)		1		
6		(1)		1		
7		(1)		1		
8		(1)		1		
9		(1)		1		
10		(1)		1		
11		(1)		1		
12		(1)		1		
13		(1)		1		
14		(1)		1		
15		(1)		1		
16		(1)		1		
17		(1)		1		
18		(1)		1		
19		(1)		1		
20		(1)		1		
21		(1)		1		
22						
23						
24						
25						
26						
27						
28						
29						
30						
31						
32						
33						
34						
35						
36						
37						
38						
39						
40						
41						
42						
43						
44						
45						
46						
47						
48						
49						
50						
Total Indep	1		1		0	
Total Depend	20		20		0	
Total Claims	21		21		0	

	*		*		*	
	Indep	Depend	Indep	Depend	Indep	Depend
51						
52						
53						
54						
55						
56						
57						
58						
59						
60						
61						
62						
63						
64						
65						
66						
67						
68						
69						
70						
71						
72						
73						
74						
75						
76						
77						
78						
79						
80						
81						
82						
83						
84						
85						
86						
87						
88						
89						
90						
91						
92						
93						
94						
95						
96						
97						
98						
99						
100						

PATENT APPLICATION FEE DETERMINATION RECORD Substitute for Form PTO-875	Application or Docket Number 14/129,401

APPLICATION AS FILED - PART I

FOR	(Column 1) NUMBER FILED	(Column 2) NUMBER EXTRA	SMALL ENTITY RATE($)	SMALL ENTITY FEE($)	OR	OTHER THAN SMALL ENTITY RATE($)	OTHER THAN SMALL ENTITY FEE($)
BASIC FEE (37 CFR 1.16(a), (b), or (c))	N/A	N/A	N/A			N/A	280
SEARCH FEE (37 CFR 1.16(k), (i), or (m))	N/A	N/A	N/A			N/A	480
EXAMINATION FEE (37 CFR 1.16(o), (p), or (q))	N/A	N/A	N/A			N/A	720
TOTAL CLAIMS (37 CFR 1.16(i))	21 minus 20 =	* 1			OR	x 80 =	80
INDEPENDENT CLAIMS (37 CFR 1.16(h))	1 minus 3 =	*				x 420 =	0.00
APPLICATION SIZE FEE (37 CFR 1.16(s))	If the specification and drawings exceed 100 sheets of paper, the application size fee due is $310 ($155 for small entity) for each additional 50 sheets or fraction thereof. See 35 U.S.C. 41(a)(1)(G) and 37 CFR 1.16(s).						0.00
MULTIPLE DEPENDENT CLAIM PRESENT (37 CFR 1.16(j))							0.00
* If the difference in column 1 is less than zero, enter "0" in column 2.			TOTAL			TOTAL	1560

APPLICATION AS AMENDED - PART II

		(Column 1) CLAIMS REMAINING AFTER AMENDMENT		(Column 2) HIGHEST NUMBER PREVIOUSLY PAID FOR	(Column 3) PRESENT EXTRA	SMALL ENTITY RATE($)	SMALL ENTITY ADDITIONAL FEE($)	OR	OTHER THAN SMALL ENTITY RATE($)	OTHER THAN SMALL ENTITY ADDITIONAL FEE($)
AMENDMENT A	Total (37 CFR 1.16(i))	*	Minus	**	=	x =		OR	x =	
AMENDMENT A	Independent (37 CFR 1.16(h))	*	Minus	***	=	x =		OR	x =	
AMENDMENT A	Application Size Fee (37 CFR 1.16(s))									
AMENDMENT A	FIRST PRESENTATION OF MULTIPLE DEPENDENT CLAIM (37 CFR 1.16(j))							OR		
						TOTAL ADD'L FEE		OR	TOTAL ADD'L FEE	

		(Column 1) CLAIMS REMAINING AFTER AMENDMENT		(Column 2) HIGHEST NUMBER PREVIOUSLY PAID FOR	(Column 3) PRESENT EXTRA	RATE($)	ADDITIONAL FEE($)	OR	RATE($)	ADDITIONAL FEE($)
AMENDMENT B	Total (37 CFR 1.16(i))	*	Minus	**	=	x =		OR	x =	
AMENDMENT B	Independent (37 CFR 1.16(h))	*	Minus	***	=	x =		OR	x =	
AMENDMENT B	Application Size Fee (37 CFR 1.16(s))									
AMENDMENT B	FIRST PRESENTATION OF MULTIPLE DEPENDENT CLAIM (37 CFR 1.16(j))							OR		
						TOTAL ADD'L FEE		OR	TOTAL ADD'L FEE	

* If the entry in column 1 is less than the entry in column 2, write "0" in column 3.
** If the "Highest Number Previously Paid For" IN THIS SPACE is less than 20, enter "20".
*** If the "Highest Number Previously Paid For" IN THIS SPACE is less than 3, enter "3".
The "Highest Number Previously Paid For" (Total or Independent) is the highest found in the appropriate box in column 1.

To: DBRIPDocket@dbr.com,penelope.mongelluzzo@dbr.com,
From: PAIR_eOfficeAction@uspto.gov
Cc: PAIR_eOfficeAction@uspto.gov
Subject: Private PAIR Correspondence Notification for Customer Number 105855

Jan 29, 2014 05:28:58 AM

Dear PAIR Customer:

Drinker Biddle & Reath LLP
1500 K Street NW, Suite 1100
Washington, DC 20005
UNITED STATES

The following USPTO patent application(s) associated with your Customer Number, 105855 , have new outgoing correspondence. This correspondence is now available for viewing in Private PAIR.

The official date of notification of the outgoing correspondence will be indicated on the form PTOL-90 accompanying the correspondence.

Disclaimer:
The list of documents shown below is provided as a courtesy and is not part of the official file wrapper. The content of the images shown in PAIR is the official record.

Application	Document	Mailroom Date	Attorney Docket No.
14129401	M903	01/29/2014	049121-0366-00-US-504907
	APP.FILE.REC	01/29/2014	049121-0366-00-US-504907

To view your correspondence online or update your email addresses, please visit us anytime at https://sportal.uspto.gov/secure/myportal/privatepair.

If you have any questions, please email the Electronic Business Center (EBC) at EBC@uspto.gov with 'e-Office Action' on the subject line or call 1-866-217-9197 during the following hours:

Monday - Friday 6:00 a.m. to 12:00 a.m.

Thank you for prompt attention to this notice,

UNITED STATES PATENT AND TRADEMARK OFFICE

PATENT APPLICATION INFORMATION RETRIEVAL SYSTEM

UNITED STATES PATENT AND TRADEMARK OFFICE

Commissioner for Patents
United States Patent and Trademark Office
P.O. Box 1450
Alexandria, VA 22313-1450
www.uspto.gov

Drinker Biddle & Reath LLP
1500 K Street NW, Suite 1100
Washington DC 20005

MAILED
FEB 25 2014
OFFICE OF PETITIONS

In re Application of
Patrick Andersson et al.
Application No.: 14/129,401
Filing Date: December 26, 2013
Attorney Docket No. 049121-0366-00-US-504907
For: Absorbent Article Having Intake Structure

: DECISION ON REQUEST TO
: PARTICIPATE IN THE PATENT
: PROSECUTION HIGHWAY
: PROGRAM AND PETITION
: TO MAKE SPECIAL UNDER
: 37 CFR 1.102(a)

This is a decision on the request to participate in the Patent Prosecution Highway (PPH) program and the petition under 37 CFR 1.102(a), filed January 8, 2014, to make the above-identified application special.

The request and petition are **GRANTED**.

DISCUSSION

A grantable request to participate in the PPH pilot program and petition to make special require:

1. The U.S. application for which participation in the Global/IP5 PPH pilot program is requested must have the same earliest date, whether this is the priority date or filing date, as that of a corresponding national or regional application filed with another Global/IP5 PPH participating office or a corresponding PCT international application for which one of the Global/IP5 PPH participating offices was the International Searching Authority (ISA) or the International Preliminary Examining Authority (IPEA).

2. Applicant must:
   a. Ensure all the claims in the U.S. application must sufficiently correspond or be amended to sufficiently correspond to the allowable/patentable claim(s) in the corresponding Office of Earlier Examination (OEE) application and
   b. Submit a claims correspondence table in English;
3. Examination of the U.S. application has <u>not</u> begun;

4. Applicant must submit:
   a. Documentation of prior office action:
      i. a copy of the office action(s) just prior to the "Decision to Grant a Patent" from each of the Global/IP5 PPH participating office application(s) containing the allowable/patentable claim(s) or
      ii. if the allowable/patentable claims(s) are from a "Notification of Reasons for Refusal" then the Notification of Reasons for Refusal or
      iii. if the Global/IP5 PPH participating office application is a first action allowance then no office action from the Global/IP5 PPH participating office is necessary should be indicated on the request/petition form or
      iv. the latest work product in the international phase of the OEE PCT application;
   b. An English language translation of the Global/IP5 PPH participating office action or work product from (4)(a)(i)-(ii) or (iv) above;
5. Applicant must submit:
   a. An IDS listing the documents cited by the Global/IP5 PPH participating office examiner in the Global/IP5 PPH participating office action or work product (unless already submitted in this application)
   b. Copies of the documents except U.S. patents or U.S. patent application publications (unless already submitted in this application);

The request to participate in the PPH pilot program and petition comply with the above requirements. Accordingly, the above-identified application has been accorded "special" status.

Telephone inquiries concerning this decision should be directed to Kimberly Inabinet at (571) 272-4618.

All other inquiries concerning the examination or status of the application is accessible in the PAIR system at http://www.uspto.gov/ebc.index.html.

This application will be forwarded to the examiner for action on the merits commensurate with this decision.

Kimberly Inabinet

Kimberly Inabinet
Paralegal Specialist
Office of Petitions

To: DBRIPDocket@dbr.com,penelope.mongelluzzo@dbr.com,
From: PAIR_eOfficeAction@uspto.gov
Cc: PAIR_eOfficeAction@uspto.gov
Subject: Private PAIR Correspondence Notification for Customer Number 105855

Mar 01, 2014 06:39:18 AM

Dear PAIR Customer:

Drinker Biddle & Reath LLP
1500 K Street NW, Suite 1100
Washington, DC 20005
UNITED STATES

The following USPTO patent application(s) associated with your Customer Number, 105855 , have new outgoing correspondence. This correspondence is now available for viewing in Private PAIR.

The official date of notification of the outgoing correspondence will be indicated on the form PTOL-90 accompanying the correspondence.

Disclaimer:
The list of documents shown below is provided as a courtesy and is not part of the official file wrapper. The content of the images shown in PAIR is the official record.

Application	Document	Mailroom Date	Attorney Docket No.
14129401	PPH.DECISION	02/25/2014	049121-0366-00-US-504907

To view your correspondence online or update your email addresses, please visit us anytime at https://sportal.uspto.gov/secure/myportal/privatepair.

If you have any questions, please email the Electronic Business Center (EBC) at EBC@uspto.gov with 'e-Office Action' on the subject line or call 1-866-217-9197 during the following hours:

Monday - Friday 6:00 a.m. to 12:00 a.m.

Thank you for prompt attention to this notice,

UNITED STATES PATENT AND TRADEMARK OFFICE

PATENT APPLICATION INFORMATION RETRIEVAL SYSTEM

PLUS Search Results for S/N 14129401, Searched Fri Mar 14 09:37:12 EDT 2014

The Patent Linguistics Utility System (PLUS) is a USPTO automated search system for U.S. Patents from 1971 to the present PLUS is a query-by-example search system which produces a list of patents that are most closely related linguistically to the application searched. This search was prepared by the staff of the Scientific and Technical Information Center, SIRA.

5523544 99
6653520 99
6752556 99
6981956 99
20030054122 99
20050129897 99
20050177081 99
4064876 82
4664662 82
6491993 82
6627791 82
6821587 82
20100198177 82
20110132819 82
20110151185 82
20120118241 82
4313984 75
4978402 75
5110646 75
5196251 75
5296291 75
5366776 75
5567245 75
5609936 75
5698054 75
5976726 75
6112548 75
6162158 75
6254711 75
6331341 75
6378836 75
6391200 75
6593001 75
6635334 75
6872435 75
6884745 75
6946182 75
6960402 75
6978894 75
7162777 75
7323087 75
7337906 75
7361872 75
7523765 75
7699765 75
7943811 75
8021406 75
7943811 75
8021406 75
8218795 75
8245417 75
8586159 75
20010006714 75
20010030140 75
20010032700 75
20020020556 75
20020020557 75
20020187285 75
20030065297 75
20030072907 75
20030184954 75
20040001986 75
20040001988 75
20040117008 75
20040180596 75
20040202820 75
20050081482 75
20050113729 75
20050178692 75
20050189029 75
20050228352 75
20060165958 75
20070039951 75
20070142887 75
20070180731 75
20070223773 75
20070281125 75
20080206506 75
20090068912 75
20090252440 75
20100011624 75
20100263152 75
20110113655 75
20110252667 75
20110300194 75
20120164194 75
20120183715 75
20120183726 75
20130150978 75
20130236691 75
20130240021 75
3662715 73
3732867 73
4279350 73
4282874 73
4450195 73
4620323 73
4634440 73
4675015 73
4731277 73
4762738 73
4785577 73
4908026 73
4923541 73
4940621 73
4989346 73
5055332 73
5158555 73
5176930 73
5207662 73
5275592 73
5336209 73
5374069 73
5376392 73
5383867 73
5399366 73
5423736 73
5470640 73
5503477 73
5614202 73
5614283 73
5632731 73
5674211 73
5776043 73
5899894 73
5979003 73
6060079 73
6204210 73
6241715 73
6277104 73
6307120 73
6348423 73
6386263 73
6523187 73
6566577 73
6645373 73
6652947 73
6684530 73
6913255 73
7014630 73
7063880 73
7089602 73
7137968 73
7216460 73
7247824 73
7254843 73
7304202 73

7507680 73
7507870 73
7598428 73
7601408 73
7674949 73
7695799 73
7743884 73
8211527 73
8323730 73
8584685 73
20010022038 73
20020007168 73
20020037387 73
20020042598 73
20020082573 73
20030108646 73
20030120238 73
20030136726 73
20030190339 73
20030211284 73
20030225388 73
20040007804 73
20040023000 73
20040127832 73
20040138604 73
20040163973 73
20040182037 73
20040221972 73
20040224116 73
20040260253 73
20050101216 73
20050202232 73
20050276965 73
20060000483 73
20060036226 73
20060200100 73
20060229579 73
20060242752 73
20070010778 73
20070048498 73
20070092686 73
20070218241 73
20080268142 73
20080301848 73
20090075033 73
20090120931 73
20090136660 73
20090166127 73
20090173572 73
20090197341 73
20110016610 73
20110028918 73
20110143072 73
20110145993 73
20110197329 73
20110257617 73
20110313383 73
20120010584 73
20120101460 73
20120144610 73
20130012902 73
20130105471 73
20130112803 73
20130281951 73
20140046237 73
20140060564 73
3594933 68
3640219 68
3670731 68
3763863 68
3858807 68
4047534 68
4059114 68
4069366 68
4102340 68
4179538 68
4341207 68
4414255 68
4424247 68
4534354 68
4624890 68
4627122 68
4638796 68
4681793 68
4690679 68
4758239 68
4777111 68
4780364 68
4822668 68
4823783 68
4865596 68
4895753 68
4921702 68
4935022 68
4946456 68
4957795 68
4961982 68
4977892 68
5012540 68
5019063 68
5019073 68
5024667 68
5037409 68
5099532 68
5102717 68
5103500 68
5124519 68
5147345 68
5149334 68
5180622 68
5196302 68
5226815 68
5246433 68
5261899 68
5266219 68
5294478 68
5300103 68
5318554 68
5332160 68
5342334 68
5361605 68
5368909 68
5368910 68
5370987 68
5384179 68
5387207 68
5397316 68
5409472 68
5447531 68
5453143 68
5466513 68
5480693 68
5496429 68
5536264 68
5547096 68
5567507 68
5597238 68
5599334 68
5624423 68
5650222 68
5681579 68
5704932 68
5741581 68
5782787 68
5786056 68
5817394 68
5834385 68
5858607 68
5891074 68
5899893 68
5914282 68
5939339 68
5974344 68

UNITED STATES PATENT AND TRADEMARK OFFICE

UNITED STATES DEPARTMENT OF COMMERCE
United States Patent and Trademark Office
Address: COMMISSIONER FOR PATENTS
P.O. Box 1450
Alexandria, Virginia 22313-1450
www.uspto.gov

APPLICATION NO.	FILING DATE	FIRST NAMED INVENTOR	ATTORNEY DOCKET NO.	CONFIRMATION NO.
14/129,401	12/26/2013	Patrik Andersson	049121-0366-00-US-504907	4049

105855 7590 03/25/2014
Drinker Biddle & Reath LLP
1500 K Street NW, Suite 1100
Washington, DC 20005

EXAMINER
KIDWELL, MICHELE M

ART UNIT	PAPER NUMBER
3761	

NOTIFICATION DATE	DELIVERY MODE
03/25/2014	ELECTRONIC

Please find below and/or attached an Office communication concerning this application or proceeding.

The time period for reply, if any, is set in the attached communication.

Notice of the Office communication was sent electronically on above-indicated "Notification Date" to the following e-mail address(es):

DBRIPDocket@dbr.com
penelope.mongelluzzo@dbr.com

PTOL-90A (Rev. 04/07)

Office Action Summary	Application No. 14/129,401	Applicant(s) ANDERSSON ET AL.	
	Examiner Michele M. Kidwell	Art Unit 3761	AIA (First Inventor to File) Status No

-- The MAILING DATE of this communication appears on the cover sheet with the correspondence address --

Period for Reply

A SHORTENED STATUTORY PERIOD FOR REPLY IS SET TO EXPIRE 3 MONTHS FROM THE MAILING DATE OF THIS COMMUNICATION.

- Extensions of time may be available under the provisions of 37 CFR 1.136(a). In no event, however, may a reply be timely filed after SIX (6) MONTHS from the mailing date of this communication.
- If NO period for reply is specified above, the maximum statutory period will apply and will expire SIX (6) MONTHS from the mailing date of this communication.
- Failure to reply within the set or extended period for reply will, by statute, cause the application to become ABANDONED (35 U.S.C. § 133). Any reply received by the Office later than three months after the mailing date of this communication, even if timely filed, may reduce any earned patent term adjustment. See 37 CFR 1.704(b).

Status

1)☐ Responsive to communication(s) filed on _____.

☐ A declaration(s)/affidavit(s) under **37 CFR 1.130(b)** was/were filed on _____.

2a)☐ This action is **FINAL**. 2b)☒ This action is non-final.

3)☐ An election was made by the applicant in response to a restriction requirement set forth during the interview on _____; the restriction requirement and election have been incorporated into this action.

4)☐ Since this application is in condition for allowance except for formal matters, prosecution as to the merits is closed in accordance with the practice under *Ex parte Quayle*, 1935 C.D. 11, 453 O.G. 213.

Disposition of Claims*

5)☒ Claim(s) 1-20 is/are pending in the application.

5a) Of the above claim(s) _____ is/are withdrawn from consideration.

6)☐ Claim(s) _____ is/are allowed.

7)☒ Claim(s) 1-20 is/are rejected.

8)☐ Claim(s) _____ is/are objected to.

9)☐ Claim(s) _____ are subject to restriction and/or election requirement.

* If any claims have been determined allowable, you may be eligible to benefit from the **Patent Prosecution Highway** program at a participating intellectual property office for the corresponding application. For more information, please see http://www.uspto.gov/patents/init_events/pph/index.jsp or send an inquiry to PPHfeedback@uspto.gov.

Application Papers

10)☐ The specification is objected to by the Examiner.

11)☒ The drawing(s) filed on 12/26/13 is/are: a)☒ accepted or b)☐ objected to by the Examiner.

Applicant may not request that any objection to the drawing(s) be held in abeyance. See 37 CFR 1.85(a).

Replacement drawing sheet(s) including the correction is required if the drawing(s) is objected to. See 37 CFR 1.121(d).

Priority under 35 U.S.C. § 119

12)☐ Acknowledgment is made of a claim for foreign priority under 35 U.S.C. § 119(a)-(d) or (f).

Certified copies:

a)☐ All b)☐ Some** c)☐ None of the:

1.☐ Certified copies of the priority documents have been received.

2.☐ Certified copies of the priority documents have been received in Application No. _____.

3.☐ Copies of the certified copies of the priority documents have been received in this National Stage application from the International Bureau (PCT Rule 17.2(a)).

** See the attached detailed Office action for a list of the certified copies not received.

Attachment(s)

1) ☒ Notice of References Cited (PTO-892)

2) ☒ Information Disclosure Statement(s) (PTO/SB/08a and/or PTO/SB/08b) Paper No(s)/Mail Date 12/26/13.

3) ☐ Interview Summary (PTO-413) Paper No(s)/Mail Date. _____ .

4) ☐ Other: _____.

DETAILED ACTION

Claim Rejections - 35 USC § 112

The following is a quotation of 35 U.S.C. 112(b):
(b) CONCLUSION.—The specification shall conclude with one or more claims particularly pointing out and distinctly claiming the subject matter which the inventor or a joint inventor regards as the invention.

The following is a quotation of 35 U.S.C. 112 (pre-AIA), second paragraph:
The specification shall conclude with one or more claims particularly pointing out and distinctly claiming the subject matter which the applicant regards as his invention.

Claims 19 – 20 are rejected under 35 U.S.C. 112(b) or 35 U.S.C. 112 (pre-AIA), second paragraph, as being indefinite for failing to particularly point out and distinctly claim the subject matter which the inventor or a joint inventor, or for pre-AIA the applicant regards as the invention.

Claim 19 recites the limitation "said flow control structure" in line 2. There is insufficient antecedent basis for this limitation in the claim.

Claim 20 recites the limitation "the laminate material" in line 2. There is insufficient antecedent basis for this limitation in the claim.

Claim Rejections - 35 USC § 102

In the event the determination of the status of the application as subject to AIA 35 U.S.C. 102 and 103 (or as subject to pre-AIA 35 U.S.C. 102 and 103) is incorrect, any correction of the statutory basis for the rejection will not be considered a new ground of

rejection if the prior art relied upon, and the rationale supporting the rejection, would be the same under either status.

The following is a quotation of the appropriate paragraphs of pre-AIA 35 U.S.C. 102 that form the basis for the rejections under this section made in this Office action:

> A person shall be entitled to a patent unless –
>
> (b) the invention was patented or described in a printed publication in this or a foreign country or in public use or on sale in this country, more than one year prior to the date of application for patent in the United States.

Claims 1 – 8 and 18 are rejected under pre-AIA 35 U.S.C. 102b as being anticipated by Gilman et al. (US 5,437,653).

With reference to claims 1 and 18, Gilman et al. (hereinafter “Gillman”) discloses an absorbent article (abstract) having a longitudinal direction, a transverse direction, side edges extending in the longitudinal direction, end edges extending in the transverse direction (figure 1) and comprising a fluid permeable topsheet (12), a fluid impermeable backsheet (16) and an absorbent core (14) enclosed between the topsheet and the backsheet (col. 2, lines 66 - 68), said absorbent core comprising a first absorbent layer (20) having an opening extending therethrough (col. 5, lines 9 - 11), wherein a fluid flow control structure is arranged between the first absorbent layer and the backsheet (col. 4, lines 42 - 45), said fluid flow control structure being a layered structure (col. 4, lines 41 - 43) comprising a non-perforated fibrous polymeric layer (24) and a first perforated polymeric layer and/or second absorbent layer(additional layer 20 as disclosed in col. 4, lines 41 – 43 and/or layer 22) wherein the polymers in the first perforated polymeric layer are selected from the listed group (col. 4, lines 49 - 51; col. 3,

lines 6 - 10; col. 6, lines 6 - 17; col. 6, lines 24 - 29) wherein the first perforated polymeric layer has a basis weight of from 50 g/m^2 to 150 g/m^2 as set forth in col. 4, lines 57 – 62.

As to claim 2, Gilman discloses an absorbent article wherein the first perforated polymeric layer has a basis weight of from 60 g/m^2 to 100 g/m^2 as set forth in col. 4, lines 57 – 62.

With reference to claim 3, Gilman discloses an absorbent article wherein the first perforated polymeric layer is selected from the listed group as set forth in col. 4, lines 49 - 51; col. 3, lines 6 - 10; col. 6, lines 6 - 17; col. 6, lines 24 – 29.

Regarding claim 4, Gilman discloses an absorbent article wherein the first perforated polymeric layer is a three-dimensionally formed layer having penetrating apertures extending from a first surface of the first perforated polymeric layer towards a second surface of the first perforated polymeric layer (col. 5, lines 9 - 39) and forming protrusions on the second surface as set forth in at least figure 2.

As to claims 5 – 6, Gilman discloses an absorbent article wherein the first perforated polymeric layer is arranged with a second surface facing and/or facing away from the non-perforated fibrous polymeric layer as set forth in col. 4, lines 39 – 65 and in the figures.

With respect to claim 7, Gilman discloses an absorbent article wherein the apertures have an average size as claimed as set forth in col. 5, lines 16 - 21.

As to claim 8, Gilman discloses an absorbent article wherein the open areas of the first perforated polymeric layer comprise 5 – 30% of the first perforated polymeric layer as set forth in col. 2, lines 31 – 34 and col. 5, lines 30 – 36.

Claim Rejections - 35 USC § 103

In the event the determination of the status of the application as subject to AIA 35 U.S.C. 102 and 103 (or as subject to pre-AIA 35 U.S.C. 102 and 103) is incorrect, any correction of the statutory basis for the rejection will not be considered a new ground of rejection if the prior art relied upon, and the rationale supporting the rejection, would be the same under either status.

The following is a quotation of pre-AIA 35 U.S.C. 103(a) which forms the basis for all obviousness rejections set forth in this Office action:

> (a) A patent may not be obtained though the invention is not identically disclosed or described as set forth in section 102 of this title, if the differences between the subject matter sought to be patented and the prior art are such that the subject matter as a whole would have been obvious at the time the invention was made to a person having ordinary skill in the art to which said subject matter pertains. Patentability shall not be negatived by the manner in which the invention was made.

The factual inquiries set forth in *Graham v. John Deere Co.*, 383 U.S. 1, 148 USPQ 459 (1966), that are applied for establishing a background for determining obviousness under pre-AIA 35 U.S.C. 103(a) are summarized as follows:

1. Determining the scope and contents of the prior art.
2. Ascertaining the differences between the prior art and the claims at issue.
3. Resolving the level of ordinary skill in the pertinent art.

4. Considering objective evidence present in the application indicating obviousness or nonobviousness.

This application currently names joint inventors. In considering patentability of the claims under pre-AIA 35 U.S.C. 103(a), the examiner presumes that the subject matter of the various claims was commonly owned at the time any inventions covered therein were made absent any evidence to the contrary. Applicant is advised of the obligation under 37 CFR 1.56 to point out the inventor and invention dates of each claim that was not commonly owned at the time a later invention was made in order for the examiner to consider the applicability of pre-AIA 35 U.S.C. 103(c) and potential pre-AIA 35 U.S.C. 102(e), (f) or (g) prior art under pre-AIA 35 U.S.C. 103(a).

Claims 9 – 17 and 19 – 20 are rejected under pre-AIA 35 U.S.C. 103(a) as being unpatentable over Gilman et al. (US 5,437,653).

The difference between Gilman and claim 9 is the provision that the layers of the fluid flow control structure are arranged in a specific order.

It would have been obvious to one of ordinary skill in the art to rearrange the layers of the fluid control layer as desired since the rearrangement of known parts of a device is within the level of ordinary skill in the art. Gilman provides a multi layered structure as claimed where any layer of the absorbent structure can be provided and duplicate and therefore arranged as claimed as set forth in col. 4, lines 39 - 43.

The difference between Gilman and claim 10 is the provision that the apertures of the layers are out of register with each other.

It would have been obvious to one of ordinary skill in the art to rearrange the apertures as desired since the rearrangement of known parts of a device is within the level of ordinary skill in the art. Gilman discloses apertures that are out of alignment as set forth in at least col. 4, lines 46 – 56 and col. 5, lines 9 – 29.

With reference to claim 11, see the rejection of claim 1.

As to claim 12, see the rejection of claim 4.

With respect to claims 13 and 14, see the rejection of claims 5 – 6.

Regarding claim 15, see the rejection of claim 7.

As to claim 16, see the rejection of claims 1 and 8.

With reference to claim 17, see the rejection of claims 1 and 3.

The difference between Gilman and claims 19 – 20 is the provision that the fluid flow control structure has a specific thickness and bending stiffness.

It would have been obvious to one of ordinary skill in the art to provide the fluid flow control structure with the desired thickness and/or bending stiffness because Gilman teaches that these properties may be varied as desired depending upon the size and function that the absorbent article is designed to serve as set forth in col. 4, lines 41 – 54.

Any inquiry concerning this communication or earlier communications from the examiner should be directed to Michele M. Kidwell whose telephone number is (571)272-4935. The examiner can normally be reached on Monday thru Friday.

If attempts to reach the examiner by telephone are unsuccessful, the examiner's supervisor, Tatyana Zalukaeva can be reached on 571-272-1115. The fax phone number for the organization where this application or proceeding is assigned is 571-273-8300.

Information regarding the status of an application may be obtained from the Patent Application Information Retrieval (PAIR) system. Status information for published applications may be obtained from either Private PAIR or Public PAIR. Status information for unpublished applications is available through Private PAIR only. For more information about the PAIR system, see http://pair-direct.uspto.gov. Should you have questions on access to the Private PAIR system, contact the Electronic Business Center (EBC) at 866-217-9197 (toll-free). If you would like assistance from a USPTO Customer Service Representative or access to the automated information system, call 800-786-9199 (IN USA OR CANADA) or 571-272-1000.

/Michele M Kidwell/
Primary Examiner, Art Unit 3761

Notice of References Cited	Application/Control No. 14/129,401	Applicant(s)/Patent Under Reexamination ANDERSSON ET AL.	
	Examiner Michele M. Kidwell	Art Unit 3761	Page 1 of 1

U.S. PATENT DOCUMENTS

*		Document Number Country Code-Number-Kind Code	Date MM-YYYY	Name	Classification
*	A	US-5,437,653	08-1995	Gilman et al.	604/378
*	B	US-5,609,588	03-1997	DiPalma et al.	604/378
*	C	US-5,810,798	09-1998	Finch et al.	604/378
*	D	US-5,961,505	10-1999	Coe et al.	604/378
	E	US-			
	F	US-			
	G	US-			
	H	US-			
	I	US-			
	J	US-			
	K	US-			
	L	US-			
	M	US-			

FOREIGN PATENT DOCUMENTS

*		Document Number Country Code-Number-Kind Code	Date MM-YYYY	Country	Name	Classification
	N					
	O					
	P					
	Q					
	R					
	S					
	T					

NON-PATENT DOCUMENTS

*		Include as applicable: Author, Title Date, Publisher, Edition or Volume, Pertinent Pages)
	U	
	V	
	W	
	X	

*A copy of this reference is not being furnished with this Office action. (See MPEP § 707.05(a).)
Dates in MM-YYYY format are publication dates. Classifications may be US or foreign.

Search Notes	Application/Control No.	Applicant(s)/Patent Under Reexamination
	14129401	ANDERSSON ET AL.
	Examiner	**Art Unit**
	MICHELE M KIDWELL	3761

CPC- SEARCHED

Symbol	Date	Examiner
A61F13/512;A61F13/5146 OR A61F13/53717 OR A61F13/53743 OR A61F2013/51355 OR A61F2013/53782 OR A61F13/494 OR A61F13/5116 OR A61F13/51305 OR A61F13/51401 OR A61F13/51478 OR A61F13/53		
A61F13/512 OR A61F13/5146 OR A61F13/53717 OR A61F13/53743 OR A61F2013/51355 OR A61F2013/53782 OR A61F13/494 OR A61F13/5116 OR A61F13/51305 OR A61F13/51401 OR A61F13/51478 OR A61F13/53	03/14/14	MK

CPC COMBINATION SETS - SEARCHED

Symbol	Date	Examiner

US CLASSIFICATION SEARCHED

Class	Subclass	Date	Examiner
604	367,378-384,385.01,385.101	03/14/14	MK

SEARCH NOTES

Search Notes	Date	Examiner
INVENTOR NAME SEARCH		
EAST TEXT SEARCH		
PLUS SEARCH	03/14/14	MK

INTERFERENCE SEARCH

US Class/ CPC Symbol	US Subclass / CPC Group	Date	Examiner

EAST Search History

EAST Search History (Prior Art)

Ref #	Hits	Search Query	DBs	Default Operator	Plurals	Time Stamp
S1	46	("3156242" | "3640829" | "3869310" | "3870593" | "3932682" | "3953566" | "3962153" | "3989867" | "4059114" | "4096227" | "4100238" | "4110392" | "4178271" | "4187390" | "4194041" | "4197148" | "4197371" | "4308303" | "4347844" | "4539256" | "4560611" | "4591523" | "4609584" | "4622036" | "4648876" | "4758239" | "4818600" | "5441056" | "5591510" | "5695871" | "5730739").PN. OR ("6277104").URPN.	US-PGPUB; USPAT; USOCR	OR	OFF	2014/03/14 10:07
S2	64	absorbent adj article and aperture same (absorbent or core) same polymeric	US-PGPUB; USPAT; USOCR	OR	OFF	2014/03/14 10:16
S3	87	absorbent adj article and aperture same (absorbent or core) same polymeric	US-PGPUB; USPAT; USOCR; FPRS; EPO; JPO; DERWENT; IBM_TDB	OR	OFF	2014/03/14 10:16
S4	37	S3 AND ((A61F13/512 OR A61F13/5146 OR A61F13/53717 OR A61F13/53743 OR A61F2013/51355 OR A61F2013/53782 OR A61F13/494 OR A61F13/5116 OR A61F13/51305 OR A61F13/51401 OR A61F13/51478 OR A61F13/53).CPC.)	US-PGPUB; USPAT; USOCR; FPRS; EPO; JPO; DERWENT; IBM_TDB	OR	OFF	2014/03/14 10:34
S5	30	"6241714"	US-PGPUB; USPAT; USOCR; FPRS; EPO; JPO; DERWENT; IBM_TDB	OR	OFF	2014/03/14 10:47
S6	2	("6241714").PN.	US-PGPUB; USPAT; USOCR; FPRS; EPO; JPO; DERWENT; IBM_TDB	OR	OFF	2014/03/14 10:47
S7	9	(("6492574") or ("6627791") or ("4591523")).PN.	US-PGPUB; USPAT; USOCR; FPRS; EPO; JPO; DERWENT; IBM_TDB	OR	OFF	2014/03/14 11:00
S8	0	S7 and polymerica	US-PGPUB;	OR	OFF	2014/03/14

			USPAT; USOCR; FPRS; EPO; JPO; DERWENT; IBM_TDB			11:01
S9	6	S7 and polymeric	US-PGPUB; USPAT; USOCR; FPRS; EPO; JPO; DERWENT; IBM_TDB	OR	OFF	2014/03/14 11:01
S10	17591	(A61F13/512 OR A61F13/5146 OR A61F13/53717 OR A61F13/53743 OR A61F2013/51355 OR A61F2013/53782 OR A61F13/494 OR A61F13/5116 OR A61F13/51305 OR A61F13/51401 OR A61F13/51478 OR A61F13/53).CPC.	US-PGPUB; USPAT; USOCR; FPRS; EPO; JPO; DERWENT; IBM_TDB	OR	OFF	2014/03/14 11:02
S11	1876	S10 and polymeric	US-PGPUB; USPAT; USOCR; FPRS; EPO; JPO; DERWENT; IBM_TDB	OR	OFF	2014/03/14 11:02
S12	585	S10 and polymeric same (perforated or apertured or opening or slot or slit)	US-PGPUB; USPAT; USOCR; FPRS; EPO; JPO; DERWENT; IBM_TDB	OR	OFF	2014/03/14 11:04
S13	429	S12 and absorbent adj article	US-PGPUB; USPAT; USOCR; FPRS; EPO; JPO; DERWENT; IBM_TDB	OR	OFF	2014/03/14 11:05
S14	2696	topsheet same (aperture or perforation or slot or slit or opening)	US-PGPUB; USPAT; USOCR; FPRS; EPO; JPO; DERWENT; IBM_TDB	OR	OFF	2014/03/14 11:05
S15	138	S13 and S14	US-PGPUB; USPAT; USOCR; FPRS; EPO; JPO; DERWENT; IBM_TDB	OR	OFF	2014/03/14 11:05
S16	2	("5591149").PN.	US-PGPUB; USPAT; USOCR; FPRS; EPO; JPO; DERWENT;	OR	OFF	2014/03/14 11:47

			IBM_TDB			
S17	327698	(absorbent or core) same (aperture or perforation or slot or slit or opening)	US-PGPUB; USPAT; USOCR; FPRS; EPO; JPO; DERWENT; IBM_TDB	OR	OFF	2014/03/17 12:23
S18	9698	(polymeric or polyolefin or polyester or polyamide) same basis adj weight	US-PGPUB; USPAT; USOCR; FPRS; EPO; JPO; DERWENT; IBM_TDB	OR	OFF	2014/03/17 12:24
S19	1933	S17 and S18	US-PGPUB; USPAT; USOCR; FPRS; EPO; JPO; DERWENT; IBM_TDB	OR	OFF	2014/03/17 12:24
S20	23541	fibrous same polymeric	US-PGPUB; USPAT; USOCR; FPRS; EPO; JPO; DERWENT; IBM_TDB	OR	OFF	2014/03/17 12:24
S21	753	S19 and S20	US-PGPUB; USPAT; USOCR; FPRS; EPO; JPO; DERWENT; IBM_TDB	OR	OFF	2014/03/17 12:24
S22	43934	absorbent adj article	US-PGPUB; USPAT; USOCR; FPRS; EPO; JPO; DERWENT; IBM_TDB	OR	OFF	2014/03/17 12:24
S23	666	S21 and S22	US-PGPUB; USPAT; USOCR; FPRS; EPO; JPO; DERWENT; IBM_TDB	OR	OFF	2014/03/17 12:24
S24	87	absorbent adj article and aperture same (absorbent or core) same polymeric	US-PGPUB; USPAT; USOCR; FPRS; EPO; JPO; DERWENT; IBM_TDB	OR	OFF	2014/03/17 12:25
S25	37	S24 AND ((A61F13/512 OR A61F13/5146 OR A61F13/53717 OR A61F13/53743 OR A61F2013/51355 OR A61F2013/53782 OR A61F13/494 OR	US-PGPUB; USPAT; USOCR; FPRS;	OR	OFF	2014/03/17 12:25

		A61F13/5116 OR A61F13/51305 OR A61F13/51401 OR A61F13/51478 OR A61F13/53).CPC.)	EPO; JPO; DERWENT; IBM_TDB			
S26	86	S23 AND ((A61F13/512 OR A61F13/5146 OR A61F13/53717 OR A61F13/53743 OR A61F2013/51355 OR A61F2013/53782 OR A61F13/494 OR A61F13/5116 OR A61F13/51305 OR A61F13/51401 OR A61F13/51478 OR A61F13/53).CPC.)	US-PGPUB; USPAT; USOCR; FPRS; EPO; JPO; DERWENT; IBM_TDB	OR	OFF	2014/03/17 12:25
S27	212	("1863333" | "1910872" | "2047054" | "2295016" | "2295439" | "2468876" | "2564689" | "2582344" | "2772678" | "2787271" | "2833283" | "2900980" | "2960089" | "3067747" | "3073308" | "3088463" | "3143113" | "3343543" | "3344789" | "3375827" | "3397697" | "3403681" | "3441023" | "3463154" | "3477433" | "3525337" | "3545442" | "3589956" | "3593717" | "3654060" | "3654929" | "3667468" | "3699966" | "3746592" | "3749627" | "3759262" | "3771525" | "3865112" | "3886941" | "3888256" | "3929135" | "3932322" | "3939838" | "3945386" | "3954107" | "3965906" | "3967623" | "3994299" | "4014341" | "4029101" | "4037602" | "4057061" | "4069822" | "4079739" | "4100324" | "4195634" | "4223677" | "4232674" | "4276338" | "4285343" | "4315507" | "4323068" | "4323069" | "4324246" | "4327731" | "4338371" | "4357939" | "4372312" | "4397644" | "4411660" | "4433972" | "4507121" | "4531945" | "4540414" | "4551142" | "4589876" | "4608047" | "4623340" | "4626254" | "4627848" | "4629643" | "4631062" | "4636209" | "4676786" | "4687478" | "4690679" | "4699620" | "4705513" | "4710186" | "4731071" | "4738674" | "4741941" | "4755413" | "4755905" | "4781962" | "4798601" | "4798603" | "4798604" | "4806411" | "4822668" | "4846813" | "4846824" | "4880419" | "4886632" | "4892534" | "4895749" | "4908026" | "4938756" | "4950264" | "4963139" | "4973325" | "4988344" | "4988345" | "5009653" | "5013309" | "5037409" | "5037412" | "5048589" | "5125918" | "5134007" | "5135521" | "5188625" | "5201727" | "5219341" | "5248309").PN. OR ("5257982" | "5294478" | "5300054" | "5300055" | "5304161" | "5330457" | "5348547" | "5356405" | "5368926" | "5370764" | "5382400" | "5399412" | "5415640" | "5423787" | "5423788" | "5429629" | "5429630" | "5437653" | "5439458" | "5454800" | "5533991" | "5609588" | "5611879").PN. OR ("5810798").URPN.	US-PGPUB; USPAT; USOCR	OR	OFF	2014/03/17 12:55
S28	34	("0810119" | "0810130" | "2418907" | "2896618" | "3403681" | "3559650" |	US-PGPUB; USPAT;	OR	OFF	2014/03/17 12:57

		"3563241" | "3929135" | "3945386" | "4055180" | "4323069" | "5342336" | "5437653" | "5527300" | "5569226" | "5603707" | "5788684" | "5803920" | "5810798" | "5961505" | "6011195" | "6206865" | "H001511").PN. OR ("6984225").URPN.	USOCR			

3/ 17/ 2014 5:26:03 PM
C:\ Users\ mkidwell\ Documents\ EAST\ Workspaces\ 14129401.wsp

PTO/SB/08a (07-09)
Approved for use through 07/31/2012. OMB 0651-0031
U.S. Patent and Trademark Office; U.S. DEPARTMENT OF COMMERCE
Under the Paperwork Reduction Act of 1995, no persons are required to respond to a collection of information unless it contains a valid OMB control number.

Substitute for form 1449/PTO

INFORMATION DISCLOSURE STATEMENT BY APPLICANT

(Use as many sheets as necessary)

Sheet	1	of	1

Complete if Known	
Application Number	Not Yet Assigned
Filing Date	December 26, 2013
First Named Inventor	Patrik ANDERSSON
Art Unit	N/A
Examiner Name	Not Yet Assigned
Attorney Docket Number	049121-0366-00-US-504907

U.S. PATENT DOCUMENTS

Examiner Initials*	Cite No.[1]	Document Number Number-Kind Code[2] (if known)	Publication Date MM-DD-YYYY	Name of Patentee or Applicant of Cited Document	Pages, Columns, Lines, Where Relevant Passages or Relevant Figures Appear
	A*	US-4,988,344	01-29-1991	Reising et al.	
	B*	US-5,957,906	09-28-1999	Roe et al.	
	C*	US-6,241,714	06-05-2001	Raidel et al.	
	D*	US-2005/0267429	12-01-2005	Cohen	
	E	US-2010/0291343	11-18-2010	Bocchio	

FOREIGN PATENT DOCUMENTS

Examiner Initials*	Cite No.[1]	Foreign Patent Document Country Code[3]-Number[4]-Kind Code[5] (if known)	Publication Date MM-DD-YYYY	Name of Patentee or Applicant of Cited Document	Pages, Columns, Lines, Where Relevant Passages Or Relevant Figures Appear	T[6]
	F	EP-0336578-A1	10-11-1989	Proctor & Gamble		
	G	EP-1403037-A1	03-31-2004	Japan Absorbent Tech Inst		
	H	FR-2044554-A5	02-19-1971	Wuhrlin, Jean		
	I	WO-97/34559-A1	09-25-1997	Procter & Gamble		
	J	WO-97/47263-A1	12-18-1997	Procter & Gamble		
	K	WO-00/19955-A2	04-13-2000	Kimberly-Clark Worldwide, Inc		
	L	WO-00/59431-A1	10-12-2000	Kimberly-Clark Worldwide, Inc		
	M	WO-01/72251-A1	10-04-2001	Kimberly-Clark Worldwide, Inc		
	N	WO-02/24133-A1	03-28-2002	Tredegar Film Prod Corp		
	O	WO-2005/079542-A2	09-01-2005	Tredegar Film Prod Corp		
	P	WO-2005/084596-A1	09-15-2005	SCA Hygiene Prod AB		
	Q	WO-2009/105000-A1	08-27-2009	SCA Hygiene Prod AB		

Examiner Signature	/Michele Kidwell/	Date Considered	03/17/2014

*EXAMINER: Initial if reference considered, whether or not citation is in conformance with MPEP 609. Draw line through citation if not in conformance and not considered. Include copy of this form with next communication to applicant. * CITE NO.: Those application(s) which are marked with an single asterisk (*) next to the Cite No. are not supplied (under 37 CFR 1.98(a)(2)(iii)) because that application was filed after June 30, 2003 or is available in the IFW. [1] Applicant's unique citation designation number (optional). [2] See Kinds Codes of USPTO Patent Documents at www.uspto.gov or MPEP 901.04. [3] Enter Office that issued the document, by the two-letter code (WIPO Standard ST.3). [4] For Japanese patent documents, the indication of the year of the reign of the Emperor must precede the serial number of the patent document. [5] Kind of document by the appropriate symbols as indicated on the document under WIPO Standard ST.16 if possible. [6] Applicant is to place a check mark here if English language Translation is attached.

ALL REFERENCES CONSIDERED EXCEPT WHERE LINED THROUGH. /MK/

Index of Claims	Application/Control No.	Applicant(s)/Patent Under Reexamination
	14129401	ANDERSSON ET AL.
	Examiner	**Art Unit**
	MICHELE M KIDWELL	3761

✓	Rejected	-	Cancelled	N	Non-Elected	A	Appeal
=	Allowed	÷	Restricted	I	Interference	O	Objected

☐ Claims renumbered in the same order as presented by applicant ☐ CPA ☐ T.D. ☐ R.1.47

CLAIM		DATE								
Final	Original	03/17/2014								
	1	✓								
	2	✓								
	3	✓								
	4	✓								
	5	✓								
	6	✓								
	7	✓								
	8	✓								
	9	✓								
	10	✓								
	11	✓								
	12	✓								
	13	✓								
	14	✓								
	15	✓								
	16	✓								
	17	✓								
	18	✓								
	19	✓								
	20	✓								

To: DBRIPDocket@dbr.com,penelope.mongelluzzo@dbr.com,
From: PAIR_eOfficeAction@uspto.gov
Cc: PAIR_eOfficeAction@uspto.gov
Subject: Private PAIR Correspondence Notification for Customer Number 105855

Mar 25, 2014 05:33:51 AM

Dear PAIR Customer:

Drinker Biddle & Reath LLP
1500 K Street NW, Suite 1100
Washington, DC 20005
UNITED STATES

The following USPTO patent application(s) associated with your Customer Number, 105855 , have new outgoing correspondence. This correspondence is now available for viewing in Private PAIR.

The official date of notification of the outgoing correspondence will be indicated on the form PTOL-90 accompanying the correspondence.

Disclaimer:
The list of documents shown below is provided as a courtesy and is not part of the official file wrapper. The content of the images shown in PAIR is the official record.

Application	Document	Mailroom Date	Attorney Docket No.
14129401	CTNF	03/25/2014	049121-0366-00-US-504907
	892	03/25/2014	049121-0366-00-US-504907
	1449	03/25/2014	049121-0366-00-US-504907

To view your correspondence online or update your email addresses, please visit us anytime at https://sportal.uspto.gov/secure/myportal/privatepair.

If you have any questions, please email the Electronic Business Center (EBC) at EBC@uspto.gov with 'e-Office Action' on the subject line or call 1-866-217-9197 during the following hours:

Monday - Friday 6:00 a.m. to 12:00 a.m.

Thank you for prompt attention to this notice,

UNITED STATES PATENT AND TRADEMARK OFFICE

PATENT APPLICATION INFORMATION RETRIEVAL SYSTEM

UNITED STATES PATENT AND TRADEMARK OFFICE

UNITED STATES DEPARTMENT OF COMMERCE
United States Patent and Trademark Office
Address: COMMISSIONER FOR PATENTS
P.O. Box 1450
Alexandria, Virginia 22313-1450
www.uspto.gov

APPLICATION NUMBER	FILING OR 371(C) DATE	FIRST NAMED APPLICANT	ATTY. DOCKET NO./TITLE
14/129,401	12/26/2013	Patrik Andersson	049121-0366-00-US-504907

CONFIRMATION NO. 4049

105855
Drinker Biddle & Reath LLP
1500 K Street NW, Suite 1100
Washington, DC 20005

PUBLICATION NOTICE

OC000000068318892

Title:ABSORBENT ARTICLE HAVING INTAKE STRUCTURE

Publication No.US-2014-0128828-A1
Publication Date:05/08/2014

NOTICE OF PUBLICATION OF APPLICATION

The above-identified application will be electronically published as a patent application publication pursuant to 37 CFR 1.211, et seq. The patent application publication number and publication date are set forth above.

The publication may be accessed through the USPTO's publically available Searchable Databases via the Internet at www.uspto.gov. The direct link to access the publication is currently http://www.uspto.gov/patft/.

The publication process established by the Office does not provide for mailing a copy of the publication to applicant. A copy of the publication may be obtained from the Office upon payment of the appropriate fee set forth in 37 CFR 1.19(a)(1). Orders for copies of patent application publications are handled by the USPTO's Office of Public Records. The Office of Public Records can be reached by telephone at (703) 308-9726 or (800) 972-6382, by facsimile at (703) 305-8759, by mail addressed to the United States Patent and Trademark Office, Office of Public Records, Alexandria, VA 22313-1450 or via the Internet.

In addition, information on the status of the application, including the mailing date of Office actions and the dates of receipt of correspondence filed in the Office, may also be accessed via the Internet through the Patent Electronic Business Center at www.uspto.gov using the public side of the Patent Application Information and Retrieval (PAIR) system. The direct link to access this status information is currently http://pair.uspto.gov/. Prior to publication, such status information is confidential and may only be obtained by applicant using the private side of PAIR.

Further assistance in electronically accessing the publication, or about PAIR, is available by calling the Patent Electronic Business Center at 1-866-217-9197.

Office of Data Managment, Application Assistance Unit (571) 272-4000, or (571) 272-4200, or 1-888-786-0101

To: DBRIPDocket@dbr.com,penelope.mongelluzzo@dbr.com,
From: PAIR_eOfficeAction@uspto.gov
Cc: PAIR_eOfficeAction@uspto.gov
Subject: Private PAIR Correspondence Notification for Customer Number 105855

May 09, 2014 05:31:59 AM

Dear PAIR Customer:

Drinker Biddle & Reath LLP
1500 K Street NW, Suite 1100
Washington, DC 20005
UNITED STATES

The following USPTO patent application(s) associated with your Customer Number, 105855 , have new outgoing correspondence. This correspondence is now available for viewing in Private PAIR.

The official date of notification of the outgoing correspondence will be indicated on the form PTOL-90 accompanying the correspondence.

Disclaimer:
The list of documents shown below is provided as a courtesy and is not part of the official file wrapper. The content of the images shown in PAIR is the official record.

Application	Document	Mailroom Date	Attorney Docket No.
14129401	NTC.PUB	05/08/2014	049121-0366-00-US-504907

To view your correspondence online or update your email addresses, please visit us anytime at https://sportal.uspto.gov/secure/myportal/privatepair.

If you have any questions, please email the Electronic Business Center (EBC) at EBC@uspto.gov with 'e-Office Action' on the subject line or call 1-866-217-9197 during the following hours:

Monday - Friday 6:00 a.m. to 12:00 a.m.

Thank you for prompt attention to this notice,

UNITED STATES PATENT AND TRADEMARK OFFICE

PATENT APPLICATION INFORMATION RETRIEVAL SYSTEM

Docket No.: 049121-0366-00-US (504907)
(PATENT)

IN THE UNITED STATES PATENT AND TRADEMARK OFFICE

In re Application of: Patrik ANDERSSON et al.	)	Confirmation No.: 4049
	)	
U.S. Application No.: 14/129,401	)	Group Art Unit: 3761
	)	
Filed: December 26, 2013	)	Examiner: Michele M. Kidwell
	)	
For: ABSORBENT ARTICLE HAVING INTAKE STRUCTURE	)	

Commissioner for Patents
U.S. Patent and Trademark Office
Customer Window, Mail Stop Amendment
Alexandria, VA 22313-1450

AMENDMENT UNDER 37 C.F.R. § 1.111

Dear Madam:

In response to the non-final Office Action dated March 25, 2014, the period for response to which runs through June 25, 2014, please amend the above-identified patent application as follows:

Amendments to the Claims are reflected in the listing of claims that begin on page 2 of this paper; and

Remarks begin on page 6 of this paper.

AMENDMENTS TO THE CLAIMS

Please amend the claims as follows. This listing of claims will replace all prior versions, and listings, of claims in the application:

Listing of Claims:

Claim 1 (Currently Amended): An absorbent article having a longitudinal direction and a transverse direction, side edges extending in the longitudinal direction and end edges extending in the transverse direction and comprising:

a fluid permeable topsheet,

a fluid impermeable backsheet, and

an absorbent core enclosed between said topsheet and said backsheet, said absorbent core comprising,

a first absorbent layer having an opening extending therethrough, and

a fluid flow control structure,

wherein [[a]] the fluid flow control structure is arranged between said first absorbent layer and said backsheet, said fluid flow control structure being a layered structure comprising a non-perforated fibrous polymeric layer and a first perforated polymeric layer, wherein the polymers in the first perforated polymeric layer are selected from polyolefins, polyesters, polyamides and blends and combinations thereof, the first perforated polymeric layer having a basis weight of from 50 g/m^2 to 150 g/m^2.

Claim 2 (Previously Presented): The absorbent article according to claim 1, wherein the first perforated polymeric layer has a basis weight of from 60 g/m^2 to 100 g/m^2.

Claim 3 (Previously Presented): The absorbent article according to claim 1, wherein the first perforated polymeric layer is a nonwoven, a film or a film/nonwoven laminate.

Claim 4 (Previously Presented): The absorbent article according to claim 1, wherein the first perforated polymeric layer is a three-dimensionally formed layer having penetrating apertures extending from a first surface of the first perforated polymeric layer towards a second surface of the first perforated polymeric layer and forming protrusions on said second surface.

Claim 5 (Previously Presented): The absorbent article according to claim 4, wherein the first perforated polymeric layer is arranged with said second surface facing the non-perforated fibrous polymeric layer.

Claim 6 (Previously Presented): The absorbent article according to claim 4, wherein the first perforated polymeric layer is arranged with said second surface facing away from the non-perforated fibrous polymeric layer.

Claim 7 (Previously Presented): The absorbent article according to claim 4, wherein the average size of the apertures in the first perforated polymeric layer is 0.5 - 5 mm.

Claim 8 (Previously Presented): The absorbent article according to claim 1, wherein open areas of the first perforated polymeric layer comprise 5-30% of the first perforated polymeric layer.

Claim 9 (Previously Presented): The absorbent article according to claim 1, wherein said fluid flow control structure is a three-layer structure consisting of the non-perforated fibrous polymeric layer, the first perforated polymeric layer and a second perforated polymeric layer, the non-perforated fibrous polymeric layer being sandwiched between the first perforated polymeric layer and the second perforated polymeric layer.

Claim 10 (Previously Presented): The absorbent article according to claim 9, wherein apertures in the first perforated polymeric layer and the second perforated polymeric layer are out of register with each other.

Claim 11 (Previously Presented): The absorbent article according to claim 9, wherein the second perforated polymeric layer has a basis weight of from 50 g/m^2 to 150 g/m^2.

Claim 12 (Previously Presented): The absorbent article according to claim 9, wherein the second perforated polymeric layer is a three-dimensionally formed layer having apertures extending from a first surface of the second perforated polymeric layer towards a second surface of the second perforated polymeric layer and forming protrusions on said second surface of the second perforated polymeric layer.

Claim 13 (Previously Presented): The absorbent article according to claim 12, wherein the second perforated polymeric layer is arranged with said second surface of the second perforated polymeric layer facing the non-perforated fibrous polymeric layer.

Claim 14 (Previously Presented): The absorbent article according to claim 12, wherein the second perforated polymeric layer is arranged with said second surface of the second perforated polymeric layer facing away from the non-perforated fibrous polymeric layer.

Claim 15 (Previously Presented): The absorbent article according to claim 12, wherein the average size of the apertures in the second perforated polymeric layer is 0.5 - 5 mm.

Claim 16 (Previously Presented): The absorbent article according to claim 9, wherein open areas of the second perforated polymeric layer comprise 5-30% of the second perforated polymeric layer.

Claim 17 (Previously Presented): The absorbent article according to claim 9, wherein the second perforated polymeric layer is a nonwoven, a film or a film/nonwoven laminate.

Claim 18 (Previously Presented): The absorbent article according to claim 1, wherein a second absorbent layer is arranged between said fluid flow control structure and said backsheet.

Claim 19 (Currently Amended): The absorbent article according to claim 1, wherein the thickness of said <u>fluid</u> flow control structure at 5 kPa is 60-80% of the thickness at 0.5 [[KPa]] <u>kPa</u> at a first, second and third compression performed according to the compression test disclosed herein.

Claim 20 (Currently Amended): The absorbent article according to claim 1, wherein the

bending stiffness of the ~~laminate material~~ layered structure in said fluid flow control structure is 0.5 - 5 N as measured by the modified ASTM D 4032-82 CIRCULAR BEND PROCEDURE.

Claim 21 (Previously Presented): The absorbent article according to claim 1, wherein the basis weight of the non-perforated fibrous polymeric layer is from 20-120 gsm.

Claim 22 (New): The absorbent article according to claim 1, wherein the opening extends along a longitudinal center line of the absorbent article, and the fluid permeable top sheet is in contact with the fluid flow control structure via the opening.

Claim 23 (New): The absorbent article according to claim 1, wherein the opening extends through an entire crotch portion of the absorbent article.

Claim 24 (New): The absorbent article according to claim 1, wherein the fluid permeable topsheet is not perforated.

REMARKS

Entry of the foregoing and reconsideration of the subject application are respectfully requested in light of the comments which follow.

Summary of the Office Action

In the March 25, 2014 non-final Office Action, Claims 19-20 were rejected under 35 U.S.C. § 112, second paragraph, as allegedly being indefinite;

Claims 1-8 and 18 stand rejected under 35 U.S.C. § 102(b) as allegedly being anticipated over Gilman et al. (U.S. Pat. No. 5,437,653, hereinafter "Gilman"); and

Claims 9-17 and 19-20 stand rejected under 35 U.S.C. § 103(a) as allegedly obvious over Gilman.

Summary of the Response to Office Action

In the present Application, Claims 1-24 are currently pending.

The present Amendment amends independent Claim 1, dependent Claims 19-20, and adds new dependent Claims 22-24 without introducing any new matter.

The amendments to Claims 1 and 19-20 are merely formal in nature, and the features of new Claims 22-24 find non-limiting support in Applicants' disclosure as originally filed, for example in Figures 1-2, and in page 18, paragraphs [0094]-[0095]. No new matter has been added.

The rejections of the claims under 35 U.S.C. §§§ 112, second paragraph, 102(b), and 103(a) are respectfully traversed, to the extent that these rejections are still applicable to the claims.

Rejection under 35 U.S.C. § 112, Second Paragraph

In response to the rejection of Claims 19-20 under 35 U.S.C. § 112, second paragraph, Claims 19 and 20 have been amended to address the noted informalities. Accordingly, it is believed that these rejections are addressed, and reconsideration and withdrawal of these rejections is respectfully requested.

Rejection under 35 U.S.C. §§ 102(b) and 103(a)

In response to the rejection of the claims under 35 U.S.C. §§ 102(b) and 103(a), Applicants respectfully traverse the rejection, and request reconsideration thereof, as next discussed.

Briefly summarizing, Applicants' independent Claim 1 is directed to an absorbent article having a longitudinal direction and a transverse direction, side edges extending in the longitudinal direction and end edges extending in the transverse direction. The absorbent article includes a fluid permeable topsheet, a fluid impermeable backsheet, and an absorbent core enclosed between the topsheet and the backsheet.

Moreover, the absorbent core includes a first absorbent layer having an opening extending therethrough, and a fluid flow control structure. In addition, the fluid flow control structure is arranged between the first absorbent layer and the backsheet, the fluid flow control structure being a layered structure comprising a non-perforated fibrous polymeric layer and a first perforated polymeric layer, and the polymers in the first perforated polymeric layer are selected from polyolefins, polyesters, polyamides and blends and combinations thereof, the first perforated polymeric layer having a basis weight of from 50 g/m^2 to 150 g/m^2.

Turning now to the rejections, the applied reference Gilman is directed to an absorbent article 10 that has a cover layer 12 and an absorbent layer 20 that have a matrix of apertures 18, 26 that are coaxially aligned with each other. Figs. 1-2, Abst., col. 3: 31-34, col. 5: 9-16. Gilman explains that an absorbent structure 14 of the article 10 includes absorbent layer 20 with the apertures 26, and primary absorbent layers 22, 24 having no apertures. Col. 5: 30-39. In this respect, it is explained that apertures 26 in absorbent layer 20 are designed so that fluids flows downward into primary absorbent layers 22, 24, primarily serving to retain the fluids. Id. Regarding the upper, absorbent layer 20, Gilman explains that this layer 20 should also have a smaller fiber diameter than the cover 12 and should have a basis weight ranging from about 20 to about 400 gsm, preferably from about 30 to about 100 gsm, and most preferably from about 40 to about 65 gsm. Col. 4: 57-63. Moreover, primary absorbent layer 22 is described as having a longitudinal gap 34 that separates the layer 22 for liquid passage to layer 24 into two parts and is made of thermoplastic polymers, and primary absorbent layer 24 is made from hydrophilic material, for example made of meltblown material. Col. 6: 30-68, Fig. 1.

However, Gilman fails to teach all the features of Applicants' independent Claim 1. In particular, Gilman fails to teach a fluid flow control structure arranged between the first absorbent layer and the backsheet, the fluid flow control structure being a layered structure comprising a non-perforated fibrous polymeric layer and a first perforated polymeric layer, and the polymers in the first perforated polymeric layer are selected from polyolefins, polyesters, polyamides and blends and combinations thereof, the first perforated polymeric layer having a basis weight of from 50 g/m^2 to 150 g/m^2, as recited in Claim 1 in combination with the remaining features.

First, in Gilman, only absorbent layer 20 has apertures 26. Primary absorbent layers 22, 24 have no apertures at all. Gilman does not disclose any absorbent layer further from the backsheet than absorbent layer 20. Gilman fails to disclose any aperture in absorbent 22. It appears that the pending Office Action is referring to absorbent layer 20 to reach both the first absorbent layer having an opening extending throughout and the first perforated polymeric layer of the fluid flow control structure. However, those two are separate elements in Applicants' claims. Next, Gilman fails to teach that the first perforated polymeric layer has a basis weight of from 50 g/m^2 to 150 g/m^2. As a fact, Gilman is silent as to the weight properties of the primary absorbent layers 22, 24.

Moreover, these features are also not believed to be obvious in light of Gilman. Gilman states that absorbent layer 20 is designed "to provide for rapid fluid intake" and "good fluid distribution" with the apertures, while primary absorbent layers 22, 24 are designed for liquid absorption by using hydrophilic material. Col. 2: 22-40, col. 6: 1-17. One of ordinary skill in the art, when reading Gilman would not be motivated to modify Gilman's structure to include a first perforated polymeric layer that is part of the layered structure of the fluid flow control structure, as recited in Applicants' Claim 1, because apertures 18, 26 are provided in the cover 12 and absorbent 20, respectively, for fluid distribution, and no additional perforations are desired, as layers 22, 24 are designed for fluid retention. These layers 22, 24 do not have holes, perforations or apertures, because such structural features would allow liquid to escape from this layer, something that Gilman does not desire.

Accordingly, in light of the above comments, Applicants respectfully traverse the rejections of the claims under 35 U.S.C. § 103(a), and request reconsideration and withdrawal thereof. Moreover, by virtue of their claim dependency from independent Claim 1, Applicants

also traverse the rejection of the dependent claims.

In addition, on separate grounds, Applicants traverse the rejection of the dependent claims. For example, dependent Claim 4 requires that the first perforated polymeric layer is a three-dimensionally formed layer having penetrating apertures extending from a first surface of the first perforated polymeric layer towards a second surface of the first perforated polymeric layer and forming protrusions on said second surface. The pending Office Action stated that these features are anticipated by Gilman's Figure 2 and specification at column 5, lines 9-39. Applicants traverse this rejection, because Figure 2 of Gilman merely shows cover 12 and upper absorbent 20 having coaxially arranged apertures 18, 26, but fails to discuss anything related to perforations, openings, or apertures of the primary absorbent layers 22, 24 other than a central gap 34. As already discussed above, layers 22, 24 are designed for fluid retention and are made of hydrophilic material. Therefore, Applicants respectfully traverse the rejection of dependent Claim 4 on these grounds, and respectfully request reconsideration and withdrawal thereof.

CONCLUSION

In view of the foregoing discussion, Applicants respectfully request the entry of the amendments to place the application in clear condition for allowance or, in the alternative, in better form for appeal. Should the Examiner feel that there are any issues outstanding after consideration of this response; the Examiner is invited to contact Applicants' undersigned representative to expedite prosecution. A favorable action is awaited.

EXCEPT for issue fees payable under 37 C.F.R. § 1.18, the Commissioner is hereby authorized by this paper to charge any additional fees during the entire pendency of this application including fees due under 37 C.F.R. § 1.16 and 1.17 which may be required, including

any required extension of time fees, or credit any overpayment to Deposit Account No. 50-0573.

This paragraph is intended to be a **CONSTRUCTIVE PETITION FOR EXTENSION OF TIME** in accordance with 37 C.F.R. § 1.136(a)(3).

Respectfully submitted,

DRINKER BIDDLE & REATH LLP

Dated: June 24, 2014

By: N. Schibli

Nikolaus P. Schibli, Ph.D.
Reg. No. 56,994

Customer No. 105855
Drinker Biddle & Reath LLP
1500 K Street, N.W., Suite 1100
Washington, DC 20005-1209
Tel.: (202) 842-8800
Fax: (202) 842-8465

Electronic Patent Application Fee Transmittal

Application Number:	14129401
Filing Date:	26-Dec-2013
Title of Invention:	ABSORBENT ARTICLE HAVING INTAKE STRUCTURE
First Named Inventor/Applicant Name:	Patrik Andersson
Filer:	Nikolaus P. Schibli/Felicia Bull
Attorney Docket Number:	049121-0366-00-US-504907

Filed as Large Entity

U.S. National Stage under 35 USC 371 Filing Fees

Description	Fee Code	Quantity	Amount	Sub-Total in USD($)
Basic Filing:				
Pages:				
Claims:				
Claims in excess of 20	1615	3	80	240
Miscellaneous-Filing:				
Petition:				
Patent-Appeals-and-Interference:				
Post-Allowance-and-Post-Issuance:				
Extension-of-Time:				

Description	Fee Code	Quantity	Amount	Sub-Total in USD($)
Miscellaneous:				
			Total in USD ($)	**240**

Electronic Acknowledgement Receipt

EFS ID:	19395979
Application Number:	14129401
International Application Number:	
Confirmation Number:	4049
Title of Invention:	ABSORBENT ARTICLE HAVING INTAKE STRUCTURE
First Named Inventor/Applicant Name:	Patrik Andersson
Customer Number:	105855
Filer:	Nikolaus P. Schibli/Felicia Bull
Filer Authorized By:	Nikolaus P. Schibli
Attorney Docket Number:	049121-0366-00-US-504907
Receipt Date:	24-JUN-2014
Filing Date:	26-DEC-2013
Time Stamp:	15:41:36
Application Type:	U.S. National Stage under 35 USC 371

Payment information:

Submitted with Payment	yes
Payment Type	Credit Card
Payment was successfully received in RAM	$240
RAM confirmation Number	2309
Deposit Account	
Authorized User	

File Listing:

Document Number	Document Description	File Name	File Size(Bytes)/ Message Digest	Multi Part /.zip	Pages (if appl.)

1		49121-0366-Amnd.pdf	471132 b061586e4e156be49d6eaeb917b176f2d2f43c29	yes	12
	Multipart Description/PDF files in .zip description				
	Document Description		**Start**	**End**	
	Amendment/Req. Reconsideration-After Non-Final Reject		1	1	
	Claims		2	5	
	Applicant Arguments/Remarks Made in an Amendment		6	12	
Warnings:					
Information:					
2	Fee Worksheet (SB06)	fee-info.pdf	30584 f6e0830845ef53fde5bfa905c57a9702ac6364ee	no	2
Warnings:					
Information:					
		Total Files Size (in bytes):	501716		

This Acknowledgement Receipt evidences receipt on the noted date by the USPTO of the indicated documents, characterized by the applicant, and including page counts, where applicable. It serves as evidence of receipt similar to a Post Card, as described in MPEP 503.

<u>New Applications Under 35 U.S.C. 111</u>
If a new application is being filed and the application includes the necessary components for a filing date (see 37 CFR 1.53(b)-(d) and MPEP 506), a Filing Receipt (37 CFR 1.54) will be issued in due course and the date shown on this Acknowledgement Receipt will establish the filing date of the application.

<u>National Stage of an International Application under 35 U.S.C. 371</u>
If a timely submission to enter the national stage of an international application is compliant with the conditions of 35 U.S.C. 371 and other applicable requirements a Form PCT/DO/EO/903 indicating acceptance of the application as a national stage submission under 35 U.S.C. 371 will be issued in addition to the Filing Receipt, in due course.

<u>New International Application Filed with the USPTO as a Receiving Office</u>
If a new international application is being filed and the international application includes the necessary components for an international filing date (see PCT Article 11 and MPEP 1810), a Notification of the International Application Number and of the International Filing Date (Form PCT/RO/105) will be issued in due course, subject to prescriptions concerning national security, and the date shown on this Acknowledgement Receipt will establish the international filing date of the application.

PTO/SB/06 (09-11)
Approved for use through 1/31/2014. OMB 0651-0032
U.S. Patent and Trademark Office; U.S. DEPARTMENT OF COMMERCE
Under the Paperwork Reduction Act of 1995, no persons are required to respond to a collection of information unless it displays a valid OMB control number.

PATENT APPLICATION FEE DETERMINATION RECORD

Substitute for Form PTO-875

Application or Docket Number	Filing Date	
14/129,401	12/26/2013	☐ To be Mailed

ENTITY: ☒ LARGE ☐ SMALL ☐ MICRO

APPLICATION AS FILED – PART I

FOR	(Column 1) NUMBER FILED	(Column 2) NUMBER EXTRA	RATE ($)	FEE ($)
☐ BASIC FEE (37 CFR 1.16(a), (b), or (c))	N/A	N/A	N/A	
☐ SEARCH FEE (37 CFR 1.16(k), (i), or (m))	N/A	N/A	N/A	
☐ EXAMINATION FEE (37 CFR 1.16(o), (p), or (q))	N/A	N/A	N/A	
TOTAL CLAIMS (37 CFR 1.16(i))	minus 20 =	*	x $ =	
INDEPENDENT CLAIMS (37 CFR 1.16(h))	minus 3 =	*	x $ =	
☐ APPLICATION SIZE FEE (37 CFR 1.16(s))	If the specification and drawings exceed 100 sheets of paper, the application size fee due is $310 ($155 for small entity) for each additional 50 sheets or fraction thereof. See 35 U.S.C. 41(a)(1)(G) and 37 CFR 1.16(s).			
☐ MULTIPLE DEPENDENT CLAIM PRESENT (37 CFR 1.16(j))				
* If the difference in column 1 is less than zero, enter "0" in column 2.			TOTAL	

APPLICATION AS AMENDED – PART II

AMENDMENT

06/24/2014	(Column 1) CLAIMS REMAINING AFTER AMENDMENT		(Column 2) HIGHEST NUMBER PREVIOUSLY PAID FOR	(Column 3) PRESENT EXTRA	RATE ($)	ADDITIONAL FEE ($)
Total (37 CFR 1.16(i))	* 24	Minus	** 21	= 3	x $80 =	240
Independent (37 CFR 1.16(h))	* 1	Minus	***3	= 0	x $420 =	0
☐ Application Size Fee (37 CFR 1.16(s))						
☐ FIRST PRESENTATION OF MULTIPLE DEPENDENT CLAIM (37 CFR 1.16(j))						
					TOTAL ADD'L FEE	**240**

AMENDMENT

	(Column 1) CLAIMS REMAINING AFTER AMENDMENT		(Column 2) HIGHEST NUMBER PREVIOUSLY PAID FOR	(Column 3) PRESENT EXTRA	RATE ($)	ADDITIONAL FEE ($)
Total (37 CFR 1.16(i))	*	Minus	**	=	x $ =	
Independent (37 CFR 1.16(h))	*	Minus	***	=	x $ =	
☐ Application Size Fee (37 CFR 1.16(s))						
☐ FIRST PRESENTATION OF MULTIPLE DEPENDENT CLAIM (37 CFR 1.16(j))						
					TOTAL ADD'L FEE	

* If the entry in column 1 is less than the entry in column 2, write "0" in column 3.

** If the "Highest Number Previously Paid For" IN THIS SPACE is less than 20, enter "20".

*** If the "Highest Number Previously Paid For" IN THIS SPACE is less than 3, enter "3".

The "Highest Number Previously Paid For" (Total or Independent) is the highest number found in the appropriate box in column 1.

LIE
/TARA WITCHER/

This collection of information is required by 37 CFR 1.16. The information is required to obtain or retain a benefit by the public which is to file (and by the USPTO to process) an application. Confidentiality is governed by 35 U.S.C. 122 and 37 CFR 1.14. This collection is estimated to take 12 minutes to complete, including gathering, preparing, and submitting the completed application form to the USPTO. Time will vary depending upon the individual case. Any comments on the amount of time you require to complete this form and/or suggestions for reducing this burden, should be sent to the Chief Information Officer, U.S. Patent and Trademark Office, U.S. Department of Commerce, P.O. Box 1450, Alexandria, VA 22313-1450. DO NOT SEND FEES OR COMPLETED FORMS TO THIS ADDRESS. **SEND TO: Commissioner for Patents, P.O. Box 1450, Alexandria, VA 22313-1450.**

If you need assistance in completing the form, call 1-800-PTO-9199 and select option 2.

UNITED STATES PATENT AND TRADEMARK OFFICE

UNITED STATES DEPARTMENT OF COMMERCE
United States Patent and Trademark Office
Address: COMMISSIONER FOR PATENTS
P.O. Box 1450
Alexandria, Virginia 22313-1450
www.uspto.gov

APPLICATION NO.	FILING DATE	FIRST NAMED INVENTOR	ATTORNEY DOCKET NO.	CONFIRMATION NO.
14/129,401	12/26/2013	Patrik Andersson	049121-0366-00-US-504907	4049

105855 7590 07/11/2014
Drinker Biddle & Reath LLP
1500 K Street NW, Suite 1100
Washington, DC 20005

EXAMINER
KIDWELL, MICHELE M

ART UNIT	PAPER NUMBER
3761	

NOTIFICATION DATE	DELIVERY MODE
07/11/2014	ELECTRONIC

Please find below and/or attached an Office communication concerning this application or proceeding.

The time period for reply, if any, is set in the attached communication.

Notice of the Office communication was sent electronically on above-indicated "Notification Date" to the following e-mail address(es):

DBRIPDocket@dbr.com
penelope.mongelluzzo@dbr.com

PTOL-90A (Rev. 04/07)

Office Action Summary	Application No. 14/129,401	Applicant(s) ANDERSSON ET AL.	
	Examiner Michele M. Kidwell	Art Unit 3761	AIA (First Inventor to File) Status No

-- The MAILING DATE of this communication appears on the cover sheet with the correspondence address --

Period for Reply

A SHORTENED STATUTORY PERIOD FOR REPLY IS SET TO EXPIRE 3 MONTHS FROM THE MAILING DATE OF THIS COMMUNICATION.

- Extensions of time may be available under the provisions of 37 CFR 1.136(a). In no event, however, may a reply be timely filed after SIX (6) MONTHS from the mailing date of this communication.
- If NO period for reply is specified above, the maximum statutory period will apply and will expire SIX (6) MONTHS from the mailing date of this communication.
- Failure to reply within the set or extended period for reply will, by statute, cause the application to become ABANDONED (35 U.S.C. § 133). Any reply received by the Office later than three months after the mailing date of this communication, even if timely filed, may reduce any earned patent term adjustment. See 37 CFR 1.704(b).

Status

1)☒ Responsive to communication(s) filed on 6/24/14.

☐ A declaration(s)/affidavit(s) under **37 CFR 1.130(b)** was/were filed on _____.

2a)☒ This action is **FINAL**. 2b)☐ This action is non-final.

3)☐ An election was made by the applicant in response to a restriction requirement set forth during the interview on _____; the restriction requirement and election have been incorporated into this action.

4)☐ Since this application is in condition for allowance except for formal matters, prosecution as to the merits is closed in accordance with the practice under *Ex parte Quayle*, 1935 C.D. 11, 453 O.G. 213.

Disposition of Claims*

5)☒ Claim(s) 1-24 is/are pending in the application.

5a) Of the above claim(s) _____ is/are withdrawn from consideration.

6)☐ Claim(s) _____ is/are allowed.

7)☒ Claim(s) 1-24 is/are rejected.

8)☐ Claim(s) _____ is/are objected to.

9)☐ Claim(s) _____ are subject to restriction and/or election requirement.

* If any claims have been determined allowable, you may be eligible to benefit from the **Patent Prosecution Highway** program at a participating intellectual property office for the corresponding application. For more information, please see http://www.uspto.gov/patents/init_events/pph/index.jsp or send an inquiry to PPHfeedback@uspto.gov.

Application Papers

10)☐ The specification is objected to by the Examiner.

11)☒ The drawing(s) filed on 12/26/13 is/are: a)☒ accepted or b)☐ objected to by the Examiner.

Applicant may not request that any objection to the drawing(s) be held in abeyance. See 37 CFR 1.85(a).

Replacement drawing sheet(s) including the correction is required if the drawing(s) is objected to. See 37 CFR 1.121(d).

Priority under 35 U.S.C. § 119

12)☐ Acknowledgment is made of a claim for foreign priority under 35 U.S.C. § 119(a)-(d) or (f).

Certified copies:

a)☐ All b)☐ Some** c)☐ None of the:

1.☐ Certified copies of the priority documents have been received.

2.☐ Certified copies of the priority documents have been received in Application No. _____.

3.☐ Copies of the certified copies of the priority documents have been received in this National Stage application from the International Bureau (PCT Rule 17.2(a)).

** See the attached detailed Office action for a list of the certified copies not received.

Attachment(s)

1) ☐ Notice of References Cited (PTO-892)

2) ☐ Information Disclosure Statement(s) (PTO/SB/08a and/or PTO/SB/08b) Paper No(s)/Mail Date _____.

3) ☐ Interview Summary (PTO-413) Paper No(s)/Mail Date. _____ .

4) ☐ Other: _____.

DETAILED ACTION

Claim Rejections - 35 USC § 103

The following is a quotation of pre-AIA 35 U.S.C. 103(a) which forms the basis for all obviousness rejections set forth in this Office action:

> (a) A patent may not be obtained though the invention is not identically disclosed or described as set forth in section 102 of this title, if the differences between the subject matter sought to be patented and the prior art are such that the subject matter as a whole would have been obvious at the time the invention was made to a person having ordinary skill in the art to which said subject matter pertains. Patentability shall not be negatived by the manner in which the invention was made.

The factual inquiries set forth in *Graham v. John Deere Co.*, 383 U.S. 1, 148 USPQ 459 (1966), that are applied for establishing a background for determining obviousness under pre-AIA 35 U.S.C. 103(a) are summarized as follows:

1. Determining the scope and contents of the prior art.

2. Ascertaining the differences between the prior art and the claims at issue.

3. Resolving the level of ordinary skill in the pertinent art.

4. Considering objective evidence present in the application indicating obviousness or nonobviousness.

This application currently names joint inventors. In considering patentability of the claims under pre-AIA 35 U.S.C. 103(a), the examiner presumes that the subject matter of the various claims was commonly owned at the time any inventions covered therein were made absent any evidence to the contrary. Applicant is advised of the obligation under 37 CFR 1.56 to point out the inventor and invention dates of each claim that was not commonly owned at the time a later invention was made in order for the examiner to

consider the applicability of pre-AIA 35 U.S.C. 103(c) and potential pre-AIA 35 U.S.C. 102(e), (f) or (g) prior art under pre-AIA 35 U.S.C. 103(a).

Claims 1 – 24 are rejected under pre-AIA 35 U.S.C. 102b as being anticipated by Gilman et al. (US 5,437,653).

With reference to claims 1 and 18, Gilman et al. (hereinafter "Gillman") discloses an absorbent article (abstract) having a longitudinal direction, a transverse direction, side edges extending in the longitudinal direction, end edges extending in the transverse direction (figure 1) and comprising a fluid permeable topsheet (12), a fluid impermeable backsheet (16) and an absorbent core (14) enclosed between the topsheet and the backsheet (col. 2, lines 66 - 68), said absorbent core comprising a first absorbent layer (20) having an opening extending therethrough (col. 5, lines 9 - 11), and a fluid flow control structure, wherein a fluid flow control structure is arranged between the first absorbent layer and the backsheet (col. 4, lines 42 - 45), said fluid flow control structure being a layered structure (col. 4, lines 41 - 43) comprising a non-perforated fibrous polymeric layer (24) as set forth in col. 4. The polymers in the first perforated polymeric layer are selected from the listed group (col. 4, lines 49 - 51; col. 3, lines 6 - 10; col. 6, lines 6 - 17; col. 6, lines 24 - 29). The polymeric layer has a basis weight of from 50 g/m^2 to 150 g/m^2 as set forth in col. 4, lines 57 – 62. The article may also include a second absorbent layer as claimed (additional layer 20) as disclosed in col. 4, lines 41 – 43 and/or layer 22.

The difference between Gilman and claim 1 is the explicit recitation that the layered structure includes an additional perforated polymeric layer.

It would have been obvious to one of ordinary skill in the art to provide an additional perforated layer as claimed because Gilman teaches that the absorbent structure (14) as a whole may vary to include additional layers as desired depending upon the size and function that the article is designed to serve as set forth in col. 4, lines 41 - 43. This disclosure of providing additional layers of the layers already disclosed would include layer 20 which is part of the absorbent and contains apertures as set forth in at least col. 5, lines 9 – 11.

As to claim 2, Gilman discloses an absorbent article wherein the first perforated polymeric layer has a basis weight of from 60 g/m^2 to 100 g/m^2 as set forth in col. 4, lines 57 – 62.

With reference to claim 3, Gilman discloses an absorbent article wherein the first perforated polymeric layer is selected from the listed group as set forth in col. 4, lines 49 - 51; col. 3, lines 6 - 10; col. 6, lines 6 - 17; col. 6, lines 24 – 29.

Regarding claim 4, Gilman discloses an absorbent article wherein the first perforated polymeric layer is a three-dimensionally formed layer having penetrating apertures extending from a first surface of the first perforated polymeric layer towards a second surface of the first perforated polymeric layer (col. 5, lines 9 - 39) and forming protrusions on the second surface as set forth in at least figure 2.

As to claims 5 – 6, Gilman discloses an absorbent article wherein the first perforated polymeric layer is arranged with a second surface facing and/or facing away from the non-perforated fibrous polymeric layer as set forth in col. 4, lines 39 – 65 and in the figures.

With respect to claim 7, Gilman discloses an absorbent article wherein the apertures have an average size as claimed as set forth in col. 5, lines 16 - 21.

As to claim 8, Gilman discloses an absorbent article wherein the open areas of the first perforated polymeric layer comprise 5 – 30% of the first perforated polymeric layer as set forth in col. 2, lines 31 – 34 and col. 5, lines 30 – 36.

The difference between Gilman and claim 9 is the provision that the layers of the fluid flow control structure are arranged in a specific order.

It would have been obvious to one of ordinary skill in the art to rearrange the layers of the fluid control layer as desired since the rearrangement of known parts of a device is within the level of ordinary skill in the art. Gilman provides a multi layered structure as claimed where any layer of the absorbent structure can be provided and duplicate and therefore arranged as claimed as set forth in col. 4, lines 39 - 43.

The difference between Gilman and claim 10 is the provision that the apertures of the layers are out of register with each other.

It would have been obvious to one of ordinary skill in the art to rearrange the apertures as desired since the rearrangement of known parts of a device is within the level of ordinary skill in the art. Gilman discloses apertures that are out of alignment as set forth in at least col. 4, lines 46 – 56 and col. 5, lines 9 – 29.

With reference to claim 11, see the rejection of claim 1.

As to claim 12, see the rejection of claim 4.

With respect to claims 13 and 14, see the rejection of claims 5 – 6.

Regarding claim 15, see the rejection of claim 7.

As to claim 16, see the rejection of claims 1 and 8.

With reference to claim 17, see the rejection of claims 1 and 3.

The difference between Gilman and claims 19 – 20 is the provision that the fluid flow control structure has a specific thickness and bending stiffness.

It would have been obvious to one of ordinary skill in the art to provide the fluid flow control structure with the desired thickness and/or bending stiffness because Gilman teaches that these properties may be varied as desired depending upon the size and function that the absorbent article is designed to serve as set forth in col. 4, lines 41 – 54.

The difference between Gilman and claims 22 – 23 is the provision that the opening extends along specific portions of the article.

It would have been obvious to one of ordinary skill in the art to vary the location of the opening as desired because Gilman teaches that arrangement and/or size of the opening may be varied as desired as set forth in at least col. 3, lines 48 – 58.

The difference between Gilman and claim 24 is the provision that the topsheet is not aperture.

It would have been obvious to one of ordinary skill in the art to provide a non-apertured topsheet if desired because Gilman teaches that the cover sheet (i.e., topsheet) **may contain** (emphasis added) a larger surface which is aperture (col. 5, lines 11 – 16), thereby providing a scenario in which the sheet may NOT be apertured as well.

Response to Arguments

Applicant's arguments with respect to claims 1 – 20 have been considered but are moot because the arguments do not apply to any of the references being used in the current rejection.

In response to the applicant's argument that there is no perforated layer, that the basis weight refers to specific layers and that the perforated layer only refers to the cover and the first absorbent layer, the examiner disagrees and refers to col. 4, lines 41 - 43 where Gilman states there may be several layers of the absorbent (14) which includes layers 20, 22 and 24.

Conclusion

Applicant's amendment necessitated the new ground(s) of rejection presented in this Office action. Accordingly, **THIS ACTION IS MADE FINAL**.

See MPEP § 706.07(a). Applicant is reminded of the extension of time policy as set forth in 37 CFR 1.136(a).

A shortened statutory period for reply to this final action is set to expire THREE MONTHS from the mailing date of this action. In the event a first reply is filed within TWO MONTHS of the mailing date of this final action and the advisory action is not mailed until after the end of the THREE-MONTH shortened statutory period, then the shortened statutory period will expire on the date the advisory action is mailed, and any extension fee pursuant to 37 CFR 1.136(a) will be calculated from the mailing date of the advisory action. In no event, however, will the statutory period for reply expire later than SIX MONTHS from the date of this final action.

Any inquiry concerning this communication or earlier communications from the examiner should be directed to Michele M. Kidwell whose telephone number is (571)272-4935. The examiner can normally be reached on Monday thru Friday.

If attempts to reach the examiner by telephone are unsuccessful, the examiner's supervisor, Tatyana Zalukaeva can be reached on 571-272-1115. The fax phone number for the organization where this application or proceeding is assigned is 571-273-8300.

Information regarding the status of an application may be obtained from the Patent Application Information Retrieval (PAIR) system. Status information for published applications may be obtained from either Private PAIR or Public PAIR. Status information for unpublished applications is available through Private PAIR only. For more information about the PAIR system, see http://pair-direct.uspto.gov. Should you have questions on access to the Private PAIR system, contact the Electronic Business Center (EBC) at 866-217-9197 (toll-free). If you would like assistance from a USPTO Customer Service Representative or access to the automated information system, call 800-786-9199 (IN USA OR CANADA) or 571-272-1000.

/Michele M Kidwell/
Primary Examiner, Art Unit 3761

Index of Claims	Application/Control No.	Applicant(s)/Patent Under Reexamination
	14129401	ANDERSSON ET AL.
	Examiner	**Art Unit**
	MICHELE M KIDWELL	3761

✓	Rejected	-	Cancelled	N	Non-Elected	A	Appeal
=	Allowed	÷	Restricted	I	Interference	O	Objected

☐ Claims renumbered in the same order as presented by applicant ☐ CPA ☐ T.D. ☐ R.1.47

CLAIM		DATE								
Final	Original	03/17/2014	07/07/2014							
	1	✓	✓							
	2	✓	✓							
	3	✓	✓							
	4	✓	✓							
	5	✓	✓							
	6	✓	✓							
	7	✓	✓							
	8	✓	✓							
	9	✓	✓							
	10	✓	✓							
	11	✓	✓							
	12	✓	✓							
	13	✓	✓							
	14	✓	✓							
	15	✓	✓							
	16	✓	✓							
	17	✓	✓							
	18	✓	✓							
	19	✓	✓							
	20	✓	✓							
	21		✓							
	22		✓							
	23		✓							
	24		✓							

Search Notes	Application/Control No.	Applicant(s)/Patent Under Reexamination
	14129401	ANDERSSON ET AL.
	Examiner	**Art Unit**
	MICHELE M KIDWELL	3761

CPC- SEARCHED

Symbol	Date	Examiner
A61F13/512;A61F13/5146 OR A61F13/53717 OR A61F13/53743 OR A61F2013/51355 OR A61F2013/53782 OR A61F13/494 OR A61F13/5116 OR A61F13/51305 OR A61F13/51401 OR A61F13/51478 OR A61F13/53		
A61F13/512 OR A61F13/5146 OR A61F13/53717 OR A61F13/53743 OR A61F2013/51355 OR A61F2013/53782 OR A61F13/494 OR A61F13/5116 OR A61F13/51305 OR A61F13/51401 OR A61F13/51478 OR A61F13/53	03/14/14	MK
UPDATED	07/07/14	MK

CPC COMBINATION SETS - SEARCHED

Symbol	Date	Examiner

US CLASSIFICATION SEARCHED

Class	Subclass	Date	Examiner
604	367,378-384,385.01,385.101	03/14/14	MK
	UPDATED	07/07/14	MK

SEARCH NOTES

Search Notes	Date	Examiner
INVENTOR NAME SEARCH		
EAST TEXT SEARCH		
PLUS SEARCH	03/14/14	MK

INTERFERENCE SEARCH

US Class/ CPC Symbol	US Subclass / CPC Group	Date	Examiner

To: DBRIPDocket@dbr.com,penelope.mongelluzzo@dbr.com,
From: PAIR_eOfficeAction@uspto.gov
Cc: PAIR_eOfficeAction@uspto.gov
Subject: Private PAIR Correspondence Notification for Customer Number 105855

Jul 11, 2014 05:25:26 AM

Dear PAIR Customer:

Drinker Biddle & Reath LLP
1500 K Street NW, Suite 1100
Washington, DC 20005
UNITED STATES

The following USPTO patent application(s) associated with your Customer Number, 105855 , have new outgoing correspondence. This correspondence is now available for viewing in Private PAIR.

The official date of notification of the outgoing correspondence will be indicated on the form PTOL-90 accompanying the correspondence.

Disclaimer:
The list of documents shown below is provided as a courtesy and is not part of the official file wrapper. The content of the images shown in PAIR is the official record.

Application	Document	Mailroom Date	Attorney Docket No.
14129401	CTFR	07/11/2014	049121-0366-00-US-504907

To view your correspondence online or update your email addresses, please visit us anytime at https://sportal.uspto.gov/secure/myportal/privatepair.

If you have any questions, please email the Electronic Business Center (EBC) at EBC@uspto.gov with 'e-Office Action' on the subject line or call 1-866-217-9197 during the following hours:

Monday - Friday 6:00 a.m. to 12:00 a.m.

Thank you for prompt attention to this notice,

UNITED STATES PATENT AND TRADEMARK OFFICE

PATENT APPLICATION INFORMATION RETRIEVAL SYSTEM

Request for Continued Examination (RCE) Transmittal		
Address to: Mail Stop RCE Commissioner for Patents P.O. Box 1450 Alexandria, VA 22313-1450	Application Number	14/129,401
	Filing Date	December 26, 2013
	First Named Inventor	Patrik ANDERSSON
	Art Unit	3761
	Examiner Name	M. M. Kidwell
	Attorney Docket Number	049121-0366-00-US-504907

This is a Request for Continued Examination (RCE) under 37 CFR 1.114 of the above-identified application.
Request for Continued Examination (RCE) practice under 37 CFR 1.114 does not apply to any utility or plant application filed prior to June 8, 1995, or to any design application. See Instruction Sheet for RCEs (not to be submitted to the USPTO) on page 2.

1. Submission required under 37 CFR 1.114 Note: If the RCE is proper, any previously filed unentered amendments and amendments enclosed with the RCE will be entered in the order in which they were filed unless applicant instructs otherwise. If applicant does not wish to have any previously filed unentered amendment(s) entered, applicant must request non-entry of such amendment(s).
   - a. [ ] Previously submitted. If a final Office action is outstanding, any amendments filed after the final Office action may be considered as a submission even if this box is not checked.
     - i. [ ] Consider the arguments in the Appeal Brief or Reply Brief previously filed on _____
     - ii. [ ] Other _____
   - b. [X] Enclosed
     - i. [X] Amendment/Reply
     - ii. [ ] Affidavit(s)/Declaration(s)
     - iii. [ ] Information Disclosure Statement (IDS)
     - iv. [ ] Other _____
2. Miscellaneous
   - a. [ ] Suspension of action on the above-identified application is requested under 37 CFR 1.103(c) for a period of _____ months. (Period of suspension shall not exceed 3 months; Fee under 37 CFR 1.17(i) required)
   - b. [ ] Other _____
3. Fees The RCE fee under 37 CFR 1.17(e) is required by 37 CFR 1.114 when the RCE is filed.
   - a. [ ] The Director is hereby authorized to charge the following fees, any underpayment of fees, or credit any overpayments, to Deposit Account No. 500573 .
     - i. [X] RCE fee required under 37 CFR 1.17(e)
     - ii. [ ] Extension of time fee (37 CFR 1.136 and 1.17)
     - iii. [ ] Other _____
   - b. [ ] Check in the amount of $ _____ enclosed
   - c. [X] Payment by credit card (Form PTO-2038 enclosed)

WARNING: Information on this form may become public. Credit card information should not be included on this form. Provide credit card information and authorization on PTO-2038.

SIGNATURE OF APPLICANT, ATTORNEY, OR AGENT REQUIRED			
Signature	N. Schibli	Date	September 22, 2014
Name (Print/Type)	Nikolaus P. Schibli, Ph.D.	Registration No.	56,994

Docket No.: 049121-0366-00-US (504907)
(PATENT)

IN THE UNITED STATES PATENT AND TRADEMARK OFFICE

In re Application of: Patrik ANDERSSON et al.	)	Confirmation No.: 4049
U.S. Application No.: 14/129,401	)	Group Art Unit: 3761
Filed: December 26, 2013	)	Examiner: Michele M. Kidwell
For: ABSORBENT ARTICLE HAVING INTAKE STRUCTURE	)	

Commissioner for Patents
U.S. Patent and Trademark Office
Customer Window, Mail Stop Amendment
Alexandria, VA 22313-1450

AMENDMENT UNDER 37 C.F.R. § 1.114

Dear Madam:

In response to the final Office Action dated July 11, 2014, the period for response to which runs through October 13, 2014 (October 11, 2014 being a Saturday), in light of the request for Request for Continued Examination submitted herewith and payment of the corresponding fees, please amend the above-identified U.S. patent application as follows:

Amendments to the Claims are reflected in the listing of claims that begin on page 2 of this paper; and

Remarks begin on page 7 of this paper.

AMENDMENTS TO THE CLAIMS

Please amend the claims as follows. This listing of claims will replace all prior versions, and listings, of claims in the application:

Listing of Claims:

Claim 1 (Currently Amended): An absorbent article having a longitudinal direction and a transverse direction, side edges extending in the longitudinal direction and end edges extending in the transverse direction and comprising:

a fluid permeable topsheet,

a fluid impermeable backsheet, and

an absorbent core enclosed between said topsheet and said backsheet, said absorbent core comprising,

a first absorbent layer having an opening extending therethrough, ~~and~~

a fluid flow control structure, and

a second absorbent layer arranged between the fluid flow control structure and the fluid impermeable backsheet,

wherein the fluid flow control structure is arranged between said first absorbent layer and said backsheet, said fluid flow control structure being a layered structure comprising a non-perforated fibrous polymeric layer and a first perforated polymeric layer, wherein the polymers in the first perforated polymeric layer are selected from polyolefins, polyesters, polyamides and blends and combinations thereof, the first perforated polymeric layer having a basis weight of from 50 g/m^2 to 150 g/m^2, and

wherein the opening extends through an entire crotch portion of the absorbent article.

Claim 2 (Previously Presented): The absorbent article according to claim 1, wherein the first perforated polymeric layer has a basis weight of from 60 g/m^2 to 100 g/m^2.

Claim 3 (Previously Presented): The absorbent article according to claim 1, wherein the first perforated polymeric layer is a nonwoven, a film or a film/nonwoven laminate.

Claim 4 (Previously Presented): The absorbent article according to claim 1, wherein the first perforated polymeric layer is a three-dimensionally formed layer having penetrating apertures extending from a first surface of the first perforated polymeric layer towards a second surface of the first perforated polymeric layer and forming protrusions on said second surface.

Claim 5 (Previously Presented): The absorbent article according to claim 4, wherein the first perforated polymeric layer is arranged with said second surface facing the non-perforated fibrous polymeric layer.

Claim 6 (Previously Presented): The absorbent article according to claim 4, wherein the first perforated polymeric layer is arranged with said second surface facing away from the non-perforated fibrous polymeric layer.

Claim 7 (Previously Presented): The absorbent article according to claim 4, wherein the average size of the apertures in the first perforated polymeric layer is 0.5 - 5 mm.

Claim 8 (Previously Presented): The absorbent article according to claim 1, wherein

open areas of the first perforated polymeric layer comprise 5-30% of the first perforated polymeric layer.

Claim 9 (Previously Presented): The absorbent article according to claim 1, wherein said fluid flow control structure is a three-layer structure consisting of the non-perforated fibrous polymeric layer, the first perforated polymeric layer and a second perforated polymeric layer, the non-perforated fibrous polymeric layer being sandwiched between the first perforated polymeric layer and the second perforated polymeric layer.

Claim 10 (Previously Presented): The absorbent article according to claim 9, wherein apertures in the first perforated polymeric layer and the second perforated polymeric layer are out of register with each other.

Claim 11 (Previously Presented): The absorbent article according to claim 9, wherein the second perforated polymeric layer has a basis weight of from 50 g/m^2 to 150 g/m^2.

Claim 12 (Previously Presented): The absorbent article according to claim 9, wherein the second perforated polymeric layer is a three-dimensionally formed layer having apertures extending from a first surface of the second perforated polymeric layer towards a second surface of the second perforated polymeric layer and forming protrusions on said second surface of the second perforated polymeric layer.

Claim 13 (Previously Presented): The absorbent article according to claim 12, wherein

the second perforated polymeric layer is arranged with said second surface of the second perforated polymeric layer facing the non-perforated fibrous polymeric layer.

Claim 14 (Previously Presented): The absorbent article according to claim 12, wherein the second perforated polymeric layer is arranged with said second surface of the second perforated polymeric layer facing away from the non-perforated fibrous polymeric layer.

Claim 15 (Previously Presented): The absorbent article according to claim 12, wherein the average size of the apertures in the second perforated polymeric layer is 0.5 - 5 mm.

Claim 16 (Previously Presented): The absorbent article according to claim 9, wherein open areas of the second perforated polymeric layer comprise 5-30% of the second perforated polymeric layer.

Claim 17 (Previously Presented): The absorbent article according to claim 9, wherein the second perforated polymeric layer is a nonwoven, a film or a film/nonwoven laminate.

Claim 18 (Cancelled).

Claim 19 (Previously Presented): The absorbent article according to claim 1, wherein the thickness of said fluid flow control structure at 5 kPa is 60-80% of the thickness at 0.5 kPa at a first, second and third compression performed according to the compression test disclosed herein.

Claim 20 (Previously Presented): The absorbent article according to claim 1, wherein the bending stiffness of the layered structure in said fluid flow control structure is 0.5 - 5 N as measured by the modified ASTM D 4032-82 CIRCULAR BEND PROCEDURE.

Claim 21 (Previously Presented): The absorbent article according to claim 1, wherein the basis weight of the non-perforated fibrous polymeric layer is from 20-120 gsm.

Claim 22 (Previously Presented): The absorbent article according to claim 1, wherein the opening extends along a longitudinal center line of the absorbent article, and the fluid permeable top sheet is in contact with the fluid flow control structure via the opening.

Claim 23 (Cancelled).

Claim 24 (Previously Presented): The absorbent article according to claim 1, wherein the fluid permeable topsheet is not perforated.

REMARKS

Entry of the foregoing amendments and reconsideration of the subject application are respectfully requested in light of the comments which follow.

Summary of the Office Action

In the July 11, 2014 final Office Action, Claims 1-24 stand rejected under 35 U.S.C. § 103(a) as allegedly obvious over Gilman et al. (U.S. Pat. No. 5,437,653, hereinafter "Gilman").

Summary of the Response to Office Action

In the present Application, Claims 1-17, 19-22 and 24 are currently pending.

The present Amendment amends independent Claim 1 to recite the features of dependent Claims 18 and 23 without introducing any new matter, and cancels dependent Claims 18 and 23 without prejudice or disclaimer.

The rejections of the claims under 35 U.S.C. § 103(a) are respectfully traversed, to the extent that these rejections are still applicable to the claims.

Rejection under 35 U.S.C. § 103(a)

In response to the rejection of the claims under 35 U.S.C. § 103(a), Applicants respectfully traverse the rejection, and request reconsideration thereof, as next discussed.

Briefly summarizing, Applicants' independent Claim 1 is directed to an absorbent article having a longitudinal direction and a transverse direction, side edges extending in the longitudinal direction and end edges extending in the transverse direction. The absorbent article includes a fluid permeable topsheet, a fluid impermeable backsheet, and an absorbent core

enclosed between the topsheet and the backsheet.

Moreover, the absorbent core includes a first absorbent layer having an opening extending therethrough, a fluid flow control structure, and a second absorbent layer is arranged between the fluid flow control structure and the fluid impermeable backsheet. In addition, the fluid flow control structure is arranged between the first absorbent layer and the backsheet, the fluid flow control structure being a layered structure comprising a non-perforated fibrous polymeric layer and a first perforated polymeric layer, and the polymers in the first perforated polymeric layer are selected from polyolefins, polyesters, polyamides and blends and combinations thereof, the first perforated polymeric layer having a basis weight of from 50 g/m^2 to 150 g/m^2, wherein the opening extends through an entire crotch portion of the absorbent article.

Turning now to the rejections, the applied reference Gilman is directed to an absorbent article 10 that has a cover layer 12 and an absorbent layer 20 that have a matrix of apertures 18, 26 that are coaxially aligned with each other. Figs. 1-2, Abst., col. 3: 31-34, col. 5: 9-16. Gilman explains that an absorbent structure 14 of the article 10 includes absorbent layer 20 with the apertures 26, and primary absorbent layers 22, 24 having no apertures. Col. 5: 30-39. In this respect, it is explained that apertures 26 in absorbent layer 20 are designed so that fluids flows downward into primary absorbent layers 22, 24, primarily serving to retain the fluids. Id.

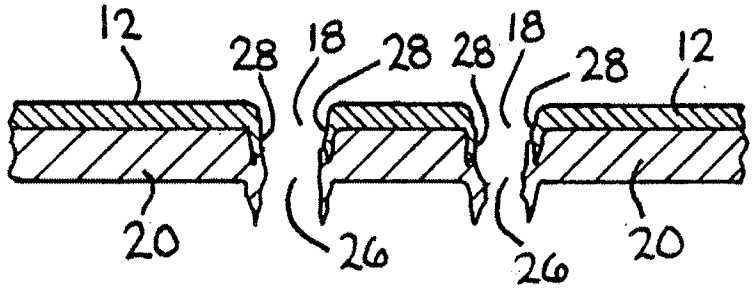

Figure 2 of Gilman showing apertures 18

Regarding the upper, absorbent layer 20, Gilman explains that this layer 20 should also have a smaller fiber diameter than the cover 12 and should have a basis weight ranging from about 20 to about 400 gsm, preferably from about 30 to about 100 gsm, and most preferably from about 40 to about 65 gsm. Col. 4: 57-63. Moreover, primary absorbent layer 22 is described as having a longitudinal gap 34 that separates the layer 22 for liquid passage to layer 24 into two parts and is made of thermoplastic polymers, and primary absorbent layer 24 is made from hydrophilic material, for example made of meltblown material. Col. 6: 30-68, Fig. 1.

However, Gilman fails to teach all the features of Applicants' independent Claim 1. In particular, Gilman fails to teach an absorbent core having a first absorbent layer with an opening extending therethrough, and a fluid flow control structure, the opening extends through an entire crotch portion of the absorbent article, as recited in combination with the other features of Applicants' Claim 1. As discussed above, Gilman merely discusses a matrix of apertures 18 that are provided through cover layer 12 and absorbent layer. Layer 20 and cover 12 of Gilman do not have any openings as required in combination with the remaining features of Claim 1. As a fact, Gilman is silent on the opening as recited in Applicants' Claim 1.

Moreover, the features of Applicants' independent Claim 1 related to the opening are also not obvious in light of Gilman. Regarding the provision of the apertures 18, Gilman explains the

following:

> The cover 12 is shown having a plurality of apertures 18 formed therethrough. The apertures 18 can be formed in a localized region and they can occupy about 10% to about 50% of that region. The apertures 18 facilitate movement of body fluid down into the absorbent 14 thereby assisting in keeping the cover 12 dry and preventing pooling of body fluid on the cover 12. Pooling of fluid usually occurs when a large amount of fluid impinges on the cover 12 in a very short period of time.
>
> ...
>
> The apertures 18 can be uniformly or randomly arranged throughout a portion of or throughout the entire surface area of the cover 12. In FIG. 1, the apertures 18 are formed within a narrow band which is aligned along the longitudinal central axis X--X of the absorbent article 10. . . . The apertures 18 can be in the shape of cylindrical or conical holes or openings having a diameter ranging from about 0.03 inches (about 0.76 mm) to about 0.13 inches (about 3.30 mm).

Col. 3: 31-63, portions omitted. In other words, Gilman explains that the apertures 18 puncture through cover 12 and absorbent 14, and can be arranged all over the cover 12, or in certain zones, and serve to "facilitate movement of body fluid down into the absorbent 14." In contrast, Applicants' Claim 1 recites an opening that extends through an entire crotch portion of the absorbent article. Accordingly, this feature is not obvious in light of Gilman, because this would render Gilman's feature for facilitating the movement of body fluid down into the absorbent 14 inoperable. In this respect, one of ordinary skill in the art, when reading Gilman, would be discouraged from pursuing the feature related to the opening of Applicants' independent Claim 1. A reference may be said to teach away when a person of ordinary skill in the art, upon reading the reference, would be discouraged from following the path set out in the reference, or would be led in a direction divergent from the path that was taken by Applicant. *In re Gurley*, 27 F.3d 551, 553, 31 USPQ2d 1130, 1131 (Fed. Cir. 1994).

Moreover, the cited passages of Gilman also fail to teach or suggest that a second absorbent layer is arranged between the fluid flow control structure and the fluid impermeable backsheet, in combination with the other features of Applicants' independent Claim 1.

Accordingly, in light of the above comments, Applicants respectfully traverse the rejections of the claims under 35 U.S.C. § 103(a), and request reconsideration and withdrawal thereof. Moreover, by virtue of their claim dependency from independent Claim 1, Applicants also traverse the rejection of the dependent claims.

In addition, on separate grounds, Applicants traverse the rejection of the dependent claims. For example, independent Claim 24 requires that the fluid permeable topsheet is *not* perforated. The pending Office Action rejected this feature by providing the following statement: "[i]t would have been obvious to one of ordinary skill in the art to provide a non-apertured topsheet if desired because Gilman teaches that the cover sheet (i.e., topsheet) **may contain** (emphasis added) a larger surface which is apertured (col. 5, lines 11-16), thereby providing a scenario in which the sheet may NOT be apertured as well." P. 6, ll. 17-21. Applicants respectfully submit that this discussion related to the cover 12 of Gilman is improper, because Gilman makes it unmistakably clear that the perforations in the cover 12 are a central part of his invention, for both the absorbent article and also the method of making the article. As quoted above, Gilman clearly states that "[t]he apertures 18 facilitate movement of body fluid down into the absorbent 14 thereby assisting in keeping the cover 12 dry and preventing pooling of body fluid on the cover 12." Col. 3, 34-40. See e.g. col. 2, ll. 26-31, "[t]he apertures allow body fluid, especially viscous fluid, like menses, which is deposited on the first layer to rapidly pass down through both layers. The method provides an economical way of forming the absorbent article by aperturing both-layers in a single operation using mating male and female

dies." The fact that the apertures 18 may not be arranged at certain portions does not mean that one of ordinary skill in the art would be motivated to modify Gilman to provide for an absorbent article that does not have any perforations at all 18, as Gilman directly teaches away from such modification, the perforations 18 in the cover 12 being the main aspect of Gilman's invention.

Therefore, Applicants respectfully traverse the rejection of dependent Claim 24 on at least these grounds, and respectfully request reconsideration and withdrawal thereof.

CONCLUSIONS

In view of the foregoing discussion, Applicants respectfully request the entry of the amendments to place the application in clear condition for allowance or, in the alternative, in better form for appeal. Should the Examiner feel that there are any issues outstanding after consideration of this response; the Examiner is invited to contact Applicants' undersigned representative to expedite prosecution. A favorable action is awaited.

EXCEPT for issue fees payable under 37 C.F.R. § 1.18, the Commissioner is hereby authorized by this paper to charge any additional fees during the entire pendency of this application including fees due under 37 C.F.R. § 1.16 and 1.17 which may be required, including any required extension of time fees, or credit any overpayment to Deposit Account No. 50-0573. This paragraph is intended to be a **CONSTRUCTIVE PETITION FOR EXTENSION OF**

TIME in accordance with 37 C.F.R. § 1.136(a)(3).

Respectfully submitted,

DRINKER BIDDLE & REATH LLP

Dated: September 22, 2014

By: _____
Nikolaus P. Schibli, Ph.D.
Reg. No. 56,994

Customer No. 105855
Drinker Biddle & Reath LLP
1500 K Street, N.W., Suite 1100
Washington, DC 20005-1209
Tel.: (202) 842-8800
Fax: (202) 842-8465

Electronic Patent Application Fee Transmittal

Application Number:	14129401
Filing Date:	26-Dec-2013
Title of Invention:	ABSORBENT ARTICLE HAVING INTAKE STRUCTURE
First Named Inventor/Applicant Name:	Patrik Andersson
Filer:	Nikolaus P. Schibli/Felicia Bull
Attorney Docket Number:	049121-0366-00-US-504907

Filed as Large Entity

U.S. National Stage under 35 USC 371 Filing Fees

Description	Fee Code	Quantity	Amount	Sub-Total in USD($)
Basic Filing:				
Pages:				
Claims:				
Miscellaneous-Filing:				
Petition:				
Patent-Appeals-and-Interference:				
Post-Allowance-and-Post-Issuance:				
Extension-of-Time:				

Description	Fee Code	Quantity	Amount	Sub-Total in USD($)
Miscellaneous:				
Request for Continued Examination	1801	1	1200	1200
		Total in USD ($)		**1200**

Electronic Acknowledgement Receipt

EFS ID:	20205582
Application Number:	14129401
International Application Number:	
Confirmation Number:	4049
Title of Invention:	ABSORBENT ARTICLE HAVING INTAKE STRUCTURE
First Named Inventor/Applicant Name:	Patrik Andersson
Customer Number:	105855
Filer:	Nikolaus P. Schibli/Felicia Bull
Filer Authorized By:	Nikolaus P. Schibli
Attorney Docket Number:	049121-0366-00-US-504907
Receipt Date:	22-SEP-2014
Filing Date:	26-DEC-2013
Time Stamp:	15:22:46
Application Type:	U.S. National Stage under 35 USC 371

Payment information:

Submitted with Payment	yes
Payment Type	Credit Card
Payment was successfully received in RAM	$1200
RAM confirmation Number	1964
Deposit Account	
Authorized User	

File Listing:

Document Number	Document Description	File Name	File Size(Bytes)/ Message Digest	Multi Part /.zip	Pages (if appl.)

1		49121-0366-RCE-Amnd.pdf	578490 d96bbb3d6c7fa2e1acb90d2fc2f707786f24a77c	yes	14

	Multipart Description/PDF files in .zip description		
	Document Description	**Start**	**End**
	Request for Continued Examination (RCE)	1	1
	Amendment Submitted/Entered with Filing of CPA/RCE	2	2
	Claims	3	7
	Applicant Arguments/Remarks Made in an Amendment	8	14

Warnings:

Information:

2	Fee Worksheet (SB06)	fee-info.pdf	30620 935129f9e9c66c4a7e6261ccff261debe38f626f	no	2

Warnings:

Information:

Total Files Size (in bytes):	609110

This Acknowledgement Receipt evidences receipt on the noted date by the USPTO of the indicated documents, characterized by the applicant, and including page counts, where applicable. It serves as evidence of receipt similar to a Post Card, as described in MPEP 503.

New Applications Under 35 U.S.C. 111
If a new application is being filed and the application includes the necessary components for a filing date (see 37 CFR 1.53(b)-(d) and MPEP 506), a Filing Receipt (37 CFR 1.54) will be issued in due course and the date shown on this Acknowledgement Receipt will establish the filing date of the application.

National Stage of an International Application under 35 U.S.C. 371
If a timely submission to enter the national stage of an international application is compliant with the conditions of 35 U.S.C. 371 and other applicable requirements a Form PCT/DO/EO/903 indicating acceptance of the application as a national stage submission under 35 U.S.C. 371 will be issued in addition to the Filing Receipt, in due course.

New International Application Filed with the USPTO as a Receiving Office
If a new international application is being filed and the international application includes the necessary components for an international filing date (see PCT Article 11 and MPEP 1810), a Notification of the International Application Number and of the International Filing Date (Form PCT/RO/105) will be issued in due course, subject to prescriptions concerning national security, and the date shown on this Acknowledgement Receipt will establish the international filing date of the application.

PTO/SB/06 (09-11)
Approved for use through 1/31/2014. OMB 0651-0032
U.S. Patent and Trademark Office; U.S. DEPARTMENT OF COMMERCE
Under the Paperwork Reduction Act of 1995, no persons are required to respond to a collection of information unless it displays a valid OMB control number.

PATENT APPLICATION FEE DETERMINATION RECORD

Substitute for Form PTO-875

Application or Docket Number	Filing Date	
14/129,401	12/26/2013	☐ To be Mailed

ENTITY: ☒ LARGE ☐ SMALL ☐ MICRO

APPLICATION AS FILED – PART I

FOR	(Column 1) NUMBER FILED	(Column 2) NUMBER EXTRA	RATE ($)	FEE ($)
☐ BASIC FEE (37 CFR 1.16(a), (b), or (c))	N/A	N/A	N/A	
☐ SEARCH FEE (37 CFR 1.16(k), (i), or (m))	N/A	N/A	N/A	
☐ EXAMINATION FEE (37 CFR 1.16(o), (p), or (q))	N/A	N/A	N/A	
TOTAL CLAIMS (37 CFR 1.16(i))	minus 20 =	*	x $ =	
INDEPENDENT CLAIMS (37 CFR 1.16(h))	minus 3 =	*	x $ =	
☐ APPLICATION SIZE FEE (37 CFR 1.16(s))	If the specification and drawings exceed 100 sheets of paper, the application size fee due is $310 ($155 for small entity) for each additional 50 sheets or fraction thereof. See 35 U.S.C. 41(a)(1)(G) and 37 CFR 1.16(s).			
☐ MULTIPLE DEPENDENT CLAIM PRESENT (37 CFR 1.16(j))				
* If the difference in column 1 is less than zero, enter "0" in column 2.			TOTAL	

APPLICATION AS AMENDED – PART II

AMENDMENT

09/22/2014	(Column 1) CLAIMS REMAINING AFTER AMENDMENT		(Column 2) HIGHEST NUMBER PREVIOUSLY PAID FOR	(Column 3) PRESENT EXTRA	RATE ($)	ADDITIONAL FEE ($)
Total (37 CFR 1.16(i))	* 22	Minus	** 24	= 0	x $80 =	0
Independent (37 CFR 1.16(h))	* 1	Minus	***3	= 0	x $420 =	0
☐ Application Size Fee (37 CFR 1.16(s))						
☐ FIRST PRESENTATION OF MULTIPLE DEPENDENT CLAIM (37 CFR 1.16(j))						
					TOTAL ADD'L FEE	0

AMENDMENT

	(Column 1) CLAIMS REMAINING AFTER AMENDMENT		(Column 2) HIGHEST NUMBER PREVIOUSLY PAID FOR	(Column 3) PRESENT EXTRA	RATE ($)	ADDITIONAL FEE ($)
Total (37 CFR 1.16(i))	*	Minus	**	=	x $ =	
Independent (37 CFR 1.16(h))	*	Minus	***	=	x $ =	
☐ Application Size Fee (37 CFR 1.16(s))						
☐ FIRST PRESENTATION OF MULTIPLE DEPENDENT CLAIM (37 CFR 1.16(j))						
					TOTAL ADD'L FEE	

* If the entry in column 1 is less than the entry in column 2, write "0" in column 3.

** If the "Highest Number Previously Paid For" IN THIS SPACE is less than 20, enter "20".

*** If the "Highest Number Previously Paid For" IN THIS SPACE is less than 3, enter "3".

The "Highest Number Previously Paid For" (Total or Independent) is the highest number found in the appropriate box in column 1.

LIE
/RUTH LLOYD/

This collection of information is required by 37 CFR 1.16. The information is required to obtain or retain a benefit by the public which is to file (and by the USPTO to process) an application. Confidentiality is governed by 35 U.S.C. 122 and 37 CFR 1.14. This collection is estimated to take 12 minutes to complete, including gathering, preparing, and submitting the completed application form to the USPTO. Time will vary depending upon the individual case. Any comments on the amount of time you require to complete this form and/or suggestions for reducing this burden, should be sent to the Chief Information Officer, U.S. Patent and Trademark Office, U.S. Department of Commerce, P.O. Box 1450, Alexandria, VA 22313-1450. DO NOT SEND FEES OR COMPLETED FORMS TO THIS ADDRESS. **SEND TO: Commissioner for Patents, P.O. Box 1450, Alexandria, VA 22313-1450.**

If you need assistance in completing the form, call 1-800-PTO-9199 and select option 2.

Docket No.: 049121-0366-00-US (504907)
(PATENT)

IN THE UNITED STATES PATENT AND TRADEMARK OFFICE

In re Application of: Patrik ANDERSSON et al.	)	Confirmation No.: 4049
U.S. Application No.: 14/129,401	)	Group Art Unit: 3761
Filed: December 26, 2013	)	Examiner: Michele M. Kidwell
For: ABSORBENT ARTICLE HAVING INTAKE STRUCTURE	)	

Commissioner for Patents
U.S. Patent and Trademark Office
Customer Window, Mail Stop Amendment
Alexandria, VA 22313-1450

SUPPLEMENTAL AMENDMENT UNDER 37 C.F.R. § 1.114

Dear Madam:

In response to the final Office Action dated July 11, 2014 and in light of the request for Request for Continued Examination and payment of the corresponding fees on September 22, 2014, please disregard the Amendment of September 22, 2014, and amend the above-identified U.S. patent application as follows before examination on the merits:

Amendments to the Claims are reflected in the listing of claims that begin on page 2 of this paper; and

Remarks begin on page 7 of this paper.

AMENDMENTS TO THE CLAIMS

Please amend the claims as follows. This listing of claims is based on the listing of claims that was presented in the amendment that was filed on June 24, 2014. Please disregard the amendment that was filed on September 22, 2014:

Listing of Claims:

Claim 1 (Currently Amended): An absorbent article having a longitudinal direction and a transverse direction, side edges extending in the longitudinal direction and end edges extending in the transverse direction and comprising:

a fluid permeable topsheet,

a fluid impermeable backsheet, and

an absorbent core enclosed between said topsheet and said backsheet, said absorbent core comprising,

a first absorbent layer having an opening extending therethrough, ~~and~~

a fluid flow control structure, and

a second absorbent layer arranged between the fluid flow control structure and the fluid impermeable backsheet,

wherein the fluid flow control structure is arranged between said first absorbent layer and said backsheet, said fluid flow control structure being a layered structure comprising a non-perforated fibrous polymeric layer and a first perforated polymeric layer, wherein the polymers in the first perforated polymeric layer are selected from polyolefins, polyesters, polyamides and blends and combinations thereof, the first perforated polymeric layer having a basis weight of from 50 g/m^2 to 150 g/m^2.

Claim 2 (Previously Presented): The absorbent article according to claim 1, wherein the first perforated polymeric layer has a basis weight of from 60 g/m^2 to 100 g/m^2.

Claim 3 (Previously Presented): The absorbent article according to claim 1, wherein the first perforated polymeric layer is a nonwoven, a film or a film/nonwoven laminate.

Claim 4 (Previously Presented): The absorbent article according to claim 1, wherein the first perforated polymeric layer is a three-dimensionally formed layer having penetrating apertures extending from a first surface of the first perforated polymeric layer towards a second surface of the first perforated polymeric layer and forming protrusions on said second surface.

Claim 5 (Previously Presented): The absorbent article according to claim 4, wherein the first perforated polymeric layer is arranged with said second surface facing the non-perforated fibrous polymeric layer.

Claim 6 (Previously Presented): The absorbent article according to claim 4, wherein the first perforated polymeric layer is arranged with said second surface facing away from the non-perforated fibrous polymeric layer.

Claim 7 (Previously Presented): The absorbent article according to claim 4, wherein the average size of the apertures in the first perforated polymeric layer is 0.5 - 5 mm.

Claim 8 (Previously Presented): The absorbent article according to claim 1, wherein

open areas of the first perforated polymeric layer comprise 5-30% of the first perforated polymeric layer.

Claim 9 (Previously Presented): The absorbent article according to claim 1, wherein said fluid flow control structure is a three-layer structure consisting of the non-perforated fibrous polymeric layer, the first perforated polymeric layer and a second perforated polymeric layer, the non-perforated fibrous polymeric layer being sandwiched between the first perforated polymeric layer and the second perforated polymeric layer.

Claim 10 (Previously Presented): The absorbent article according to claim 9, wherein apertures in the first perforated polymeric layer and the second perforated polymeric layer are out of register with each other.

Claim 11 (Previously Presented): The absorbent article according to claim 9, wherein the second perforated polymeric layer has a basis weight of from 50 g/m^2 to 150 g/m^2.

Claim 12 (Previously Presented): The absorbent article according to claim 9, wherein the second perforated polymeric layer is a three-dimensionally formed layer having apertures extending from a first surface of the second perforated polymeric layer towards a second surface of the second perforated polymeric layer and forming protrusions on said second surface of the second perforated polymeric layer.

Claim 13 (Previously Presented): The absorbent article according to claim 12, wherein

the second perforated polymeric layer is arranged with said second surface of the second perforated polymeric layer facing the non-perforated fibrous polymeric layer.

Claim 14 (Previously Presented): The absorbent article according to claim 12, wherein the second perforated polymeric layer is arranged with said second surface of the second perforated polymeric layer facing away from the non-perforated fibrous polymeric layer.

Claim 15 (Previously Presented): The absorbent article according to claim 12, wherein the average size of the apertures in the second perforated polymeric layer is 0.5 - 5 mm.

Claim 16 (Previously Presented): The absorbent article according to claim 9, wherein open areas of the second perforated polymeric layer comprise 5-30% of the second perforated polymeric layer.

Claim 17 (Previously Presented): The absorbent article according to claim 9, wherein the second perforated polymeric layer is a nonwoven, a film or a film/nonwoven laminate.

Claim 18 (Cancelled).

Claim 19 (Previously Presented): The absorbent article according to claim 1, wherein the thickness of said fluid flow control structure at 5 kPa is 60-80% of the thickness at 0.5 kPa at a first, second and third compression performed according to the compression test disclosed herein.

Claim 20 (Previously Presented): The absorbent article according to claim 1, wherein the bending stiffness of the layered structure in said fluid flow control structure is 0.5 - 5 N as measured by the modified ASTM D 4032-82 CIRCULAR BEND PROCEDURE.

Claim 21 (Previously Presented): The absorbent article according to claim 1, wherein the basis weight of the non-perforated fibrous polymeric layer is from 20-120 gsm.

Claim 22 (Previously Presented): The absorbent article according to claim 1, wherein the opening extends along a longitudinal center line of the absorbent article, and the fluid permeable top sheet is in contact with the fluid flow control structure via the opening.

Claim 23 (Previously Presented). The absorbent article according to claim 1, wherein the opening extends through an entire crotch portion of the absorbent article.

Claim 24 (Previously Presented): The absorbent article according to claim 1, wherein the fluid permeable topsheet is not perforated.

REMARKS

Entry of the foregoing amendments and reconsideration of the subject application are respectfully requested in light of the comments which follow.

Summary of the Office Action

In the July 11, 2014 final Office Action, Claims 1-24 stand rejected under 35 U.S.C. § 103(a) as allegedly obvious over Gilman et al. (U.S. Pat. No. 5,437,653, hereinafter "Gilman").

Summary of the Response to Office Action

In the present Application, Claims 1-17, and 19-24 are currently pending.

The present Amendment amends independent Claim 1 without introducing any new matter, and cancels dependent Claim 18 without prejudice or disclaimer.

The rejections of the claims under 35 U.S.C. § 103(a) are respectfully traversed, to the extent that these rejections are still applicable to the claims.

Rejection under 35 U.S.C. § 103(a)

In response to the rejection of the claims under 35 U.S.C. § 103(a), Applicants respectfully traverse the rejection, and request reconsideration thereof, as next discussed.

Briefly summarizing, Applicants' independent Claim 1 is directed to an absorbent article having a longitudinal direction and a transverse direction, side edges extending in the longitudinal direction and end edges extending in the transverse direction. The absorbent article includes a fluid permeable topsheet, a fluid impermeable backsheet, and an absorbent core enclosed between the topsheet and the backsheet.

Moreover, the absorbent core includes a first absorbent layer having an opening extending therethrough, a fluid flow control structure, and a second absorbent layer is arranged between the fluid flow control structure and the fluid impermeable backsheet. In addition, the fluid flow control structure is arranged between the first absorbent layer and the backsheet, the fluid flow control structure being a layered structure comprising a non-perforated fibrous polymeric layer and a first perforated polymeric layer, and the polymers in the first perforated polymeric layer are selected from polyolefins, polyesters, polyamides and blends and combinations thereof, the first perforated polymeric layer having a basis weight of from 50 g/m^2 to 150 g/m^2.

Turning now to the rejections, the applied reference Gilman is directed to an absorbent article 10 that has a cover layer 12 and an absorbent layer 20 that have a matrix of apertures 18, 26 that are coaxially aligned with each other. Figs. 1-2, Abst., col. 3: 31-34, col. 5: 9-16. Gilman explains that an absorbent structure 14 of the article 10 includes absorbent layer 20 with the apertures 26, and primary absorbent layers 22, 24 having no apertures. Col. 5: 30-39. In this respect, it is explained that apertures 26 in absorbent layer 20 are designed so that fluids flows downward into primary absorbent layers 22, 24, primarily serving to retain the fluids. Id.

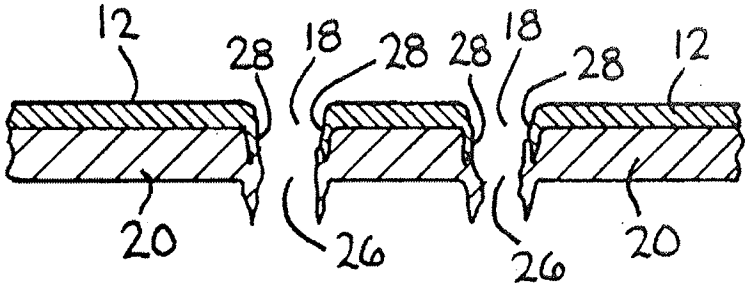

Figure 2 of Gilman showing apertures 18

Regarding the upper, absorbent layer 20, Gilman explains that this layer 20 should also have a smaller fiber diameter than the cover 12 and should have a basis weight ranging from about 20 to about 400 gsm, preferably from about 30 to about 100 gsm, and most preferably from about 40 to about 65 gsm. Col. 4: 57-63. Moreover, primary absorbent layer 22 is described as having a longitudinal gap 34 that separates the layer 22 for liquid passage to layer 24 into two parts and is made of thermoplastic polymers, and primary absorbent layer 24 is made from hydrophilic material, for example made of meltblown material. Col. 6: 30-68, Fig. 1.

However, Gilman fails to teach all the features of Applicants' independent Claim 1. In particular, Gilman fails to teach or suggest that a second absorbent layer is arranged between the fluid flow control structure and the fluid impermeable backsheet, in combination with the other features of Applicants' independent Claim 1. As discussed above, Gilman merely discusses a matrix of apertures 18 that are provided through cover layer 12 and absorbent layer.

Accordingly, in light of the above comments, Applicants respectfully traverse the rejections of the claims under 35 U.S.C. § 103(a), and request reconsideration and withdrawal thereof. Moreover, by virtue of their claim dependency from independent Claim 1, Applicants also traverse the rejection of the dependent claims.

In addition, on separate grounds, Applicants traverse the rejection of the dependent

claims. For example, independent Claim 24 requires that the fluid permeable topsheet is *not* perforated. The pending Office Action rejected this feature by providing the following statement: "[i]t would have been obvious to one of ordinary skill in the art to provide a non-apertured topsheet if desired because Gilman teaches that the cover sheet (i.e., topsheet) **may contain** (emphasis added) a larger surface which is apertured (col. 5, lines 11-16), thereby providing a scenario in which the sheet may NOT be apertured as well." P. 6, ll. 17-21. Applicants respectfully submit that this discussion related to the cover 12 of Gilman is improper, because Gilman makes it unmistakably clear that the perforations in the cover 12 are a central part of his invention, for both the absorbent article and also the method of making the article. As quoted above, Gilman clearly states that "[t]he apertures 18 facilitate movement of body fluid down into the absorbent 14 thereby assisting in keeping the cover 12 dry and preventing pooling of body fluid on the cover 12." Col. 3, 34-40. See e.g. col. 2, ll. 26-31, "[t]he apertures allow body fluid, especially viscous fluid, like menses, which is deposited on the first layer to rapidly pass down through both layers. The method provides an economical way of forming the absorbent article by aperturing both-layers in a single operation using mating male and female dies." The fact that the apertures 18 may not be arranged at certain portions does not mean that one of ordinary skill in the art would be motivated to modify Gilman to provide for an absorbent article that does not have any perforations at all 18, as Gilman directly teaches away from such modification, the perforations 18 in the cover 12 being the main aspect of Gilman's invention.

Therefore, Applicants respectfully traverse the rejection of dependent Claim 24 on at least these grounds, and respectfully request reconsideration and withdrawal thereof.

CONCLUSIONS

In view of the foregoing discussion, Applicants respectfully request the entry of the amendments to place the application in clear condition for allowance or, in the alternative, in better form for appeal. Should the Examiner feel that there are any issues outstanding after consideration of this response; the Examiner is invited to contact Applicants' undersigned representative to expedite prosecution. A favorable action is awaited.

EXCEPT for issue fees payable under 37 C.F.R. § 1.18, the Commissioner is hereby authorized by this paper to charge any additional fees during the entire pendency of this application including fees due under 37 C.F.R. § 1.16 and 1.17 which may be required, including any required extension of time fees, or credit any overpayment to Deposit Account No. 50-0573. This paragraph is intended to be a **CONSTRUCTIVE PETITION FOR EXTENSION OF TIME** in accordance with 37 C.F.R. § 1.136(a)(3).

Respectfully submitted,

DRINKER BIDDLE & REATH LLP

Christ P Bruenjes

Dated: October 6, 2014

By: Christopher P Bruenjes, Reg. No. 62,941
Nikolaus P. Schibli, Ph.D.
Reg. No. 56,994

Customer No. 105855
Drinker Biddle & Reath LLP
1500 K Street, N.W., Suite 1100
Washington, DC 20005-1209
Tel.: (202) 842-8800
Fax: (202) 842-8465

Electronic Acknowledgement Receipt

EFS ID:	20336990
Application Number:	14129401
International Application Number:	
Confirmation Number:	4049
Title of Invention:	ABSORBENT ARTICLE HAVING INTAKE STRUCTURE
First Named Inventor/Applicant Name:	Patrik Andersson
Customer Number:	105855
Filer:	Nikolaus P. Schibli/Felicia Bull
Filer Authorized By:	Nikolaus P. Schibli
Attorney Docket Number:	049121-0366-00-US-504907
Receipt Date:	06-OCT-2014
Filing Date:	26-DEC-2013
Time Stamp:	15:03:48
Application Type:	U.S. National Stage under 35 USC 371

Payment information:

Submitted with Payment	no

File Listing:

Document Number	Document Description	File Name	File Size(Bytes)/ Message Digest	Multi Part /.zip	Pages (if appl.)
1		49121-0366-SuppAmnd.pdf	443787 02ca8b94f632d507d216544a9ab9aa07612115a3	yes	11

	Multipart Description/PDF files in .zip description		
	Document Description	**Start**	**End**
	Supplemental Response or Supplemental Amendment	1	1
	Claims	2	6
	Applicant Arguments/Remarks Made in an Amendment	7	11

Warnings:	
Information:	
Total Files Size (in bytes):	443787

This Acknowledgement Receipt evidences receipt on the noted date by the USPTO of the indicated documents, characterized by the applicant, and including page counts, where applicable. It serves as evidence of receipt similar to a Post Card, as described in MPEP 503.

<u>New Applications Under 35 U.S.C. 111</u>
If a new application is being filed and the application includes the necessary components for a filing date (see 37 CFR 1.53(b)-(d) and MPEP 506), a Filing Receipt (37 CFR 1.54) will be issued in due course and the date shown on this Acknowledgement Receipt will establish the filing date of the application.

<u>National Stage of an International Application under 35 U.S.C. 371</u>
If a timely submission to enter the national stage of an international application is compliant with the conditions of 35 U.S.C. 371 and other applicable requirements a Form PCT/DO/EO/903 indicating acceptance of the application as a national stage submission under 35 U.S.C. 371 will be issued in addition to the Filing Receipt, in due course.

<u>New International Application Filed with the USPTO as a Receiving Office</u>
If a new international application is being filed and the international application includes the necessary components for an international filing date (see PCT Article 11 and MPEP 1810), a Notification of the International Application Number and of the International Filing Date (Form PCT/RO/105) will be issued in due course, subject to prescriptions concerning national security, and the date shown on this Acknowledgement Receipt will establish the international filing date of the application.

PTO/SB/06 (09-11)
Approved for use through 1/31/2014. OMB 0651-0032
U.S. Patent and Trademark Office; U.S. DEPARTMENT OF COMMERCE
Under the Paperwork Reduction Act of 1995, no persons are required to respond to a collection of information unless it displays a valid OMB control number.

PATENT APPLICATION FEE DETERMINATION RECORD

Substitute for Form PTO-875

Application or Docket Number	Filing Date	
14/129,401	12/26/2013	☐ To be Mailed

ENTITY: ☒ LARGE ☐ SMALL ☐ MICRO

APPLICATION AS FILED – PART I

FOR	(Column 1) NUMBER FILED	(Column 2) NUMBER EXTRA	RATE ($)	FEE ($)
☐ BASIC FEE (37 CFR 1.16(a), (b), or (c))	N/A	N/A	N/A	
☐ SEARCH FEE (37 CFR 1.16(k), (i), or (m))	N/A	N/A	N/A	
☐ EXAMINATION FEE (37 CFR 1.16(o), (p), or (q))	N/A	N/A	N/A	
TOTAL CLAIMS (37 CFR 1.16(i))	minus 20 =	*	x $ =	
INDEPENDENT CLAIMS (37 CFR 1.16(h))	minus 3 =	*	x $ =	
☐ APPLICATION SIZE FEE (37 CFR 1.16(s))	If the specification and drawings exceed 100 sheets of paper, the application size fee due is $310 ($155 for small entity) for each additional 50 sheets or fraction thereof. See 35 U.S.C. 41(a)(1)(G) and 37 CFR 1.16(s).			
☐ MULTIPLE DEPENDENT CLAIM PRESENT (37 CFR 1.16(j))				
* If the difference in column 1 is less than zero, enter "0" in column 2.			TOTAL	

APPLICATION AS AMENDED – PART II

AMENDMENT

10/06/2014	(Column 1) CLAIMS REMAINING AFTER AMENDMENT		(Column 2) HIGHEST NUMBER PREVIOUSLY PAID FOR	(Column 3) PRESENT EXTRA	RATE ($)	ADDITIONAL FEE ($)
Total (37 CFR 1.16(i))	* 23	Minus	** 24	= 0	x $80 =	0
Independent (37 CFR 1.16(h))	* 1	Minus	***3	= 0	x $420 =	0
☐ Application Size Fee (37 CFR 1.16(s))						
☐ FIRST PRESENTATION OF MULTIPLE DEPENDENT CLAIM (37 CFR 1.16(j))						
					TOTAL ADD'L FEE	0

AMENDMENT

	(Column 1) CLAIMS REMAINING AFTER AMENDMENT		(Column 2) HIGHEST NUMBER PREVIOUSLY PAID FOR	(Column 3) PRESENT EXTRA	RATE ($)	ADDITIONAL FEE ($)
Total (37 CFR 1.16(i))	*	Minus	**	=	x $ =	
Independent (37 CFR 1.16(h))	*	Minus	***	=	x $ =	
☐ Application Size Fee (37 CFR 1.16(s))						
☐ FIRST PRESENTATION OF MULTIPLE DEPENDENT CLAIM (37 CFR 1.16(j))						
					TOTAL ADD'L FEE	

* If the entry in column 1 is less than the entry in column 2, write "0" in column 3.
** If the "Highest Number Previously Paid For" IN THIS SPACE is less than 20, enter "20".
*** If the "Highest Number Previously Paid For" IN THIS SPACE is less than 3, enter "3".
The "Highest Number Previously Paid For" (Total or Independent) is the highest number found in the appropriate box in column 1.

LIE
/SHARAIN MORELAND/

This collection of information is required by 37 CFR 1.16. The information is required to obtain or retain a benefit by the public which is to file (and by the USPTO to process) an application. Confidentiality is governed by 35 U.S.C. 122 and 37 CFR 1.14. This collection is estimated to take 12 minutes to complete, including gathering, preparing, and submitting the completed application form to the USPTO. Time will vary depending upon the individual case. Any comments on the amount of time you require to complete this form and/or suggestions for reducing this burden, should be sent to the Chief Information Officer, U.S. Patent and Trademark Office, U.S. Department of Commerce, P.O. Box 1450, Alexandria, VA 22313-1450. DO NOT SEND FEES OR COMPLETED FORMS TO THIS ADDRESS. **SEND TO: Commissioner for Patents, P.O. Box 1450, Alexandria, VA 22313-1450.**
If you need assistance in completing the form, call 1-800-PTO-9199 and select option 2.

UNITED STATES PATENT AND TRADEMARK OFFICE

UNITED STATES DEPARTMENT OF COMMERCE
United States Patent and Trademark Office
Address: COMMISSIONER FOR PATENTS
P.O. Box 1450
Alexandria, Virginia 22313-1450
www.uspto.gov

APPLICATION NO.	FILING DATE	FIRST NAMED INVENTOR	ATTORNEY DOCKET NO.	CONFIRMATION NO.
14/129,401	12/26/2013	Patrik Andersson	049121-0366-00-US-504907	4049

105855 7590 10/14/2014
Drinker Biddle & Reath LLP
1500 K Street NW, Suite 1100
Washington, DC 20005

EXAMINER
KIDWELL, MICHELE M

ART UNIT	PAPER NUMBER
3761	

NOTIFICATION DATE	DELIVERY MODE
10/14/2014	ELECTRONIC

Please find below and/or attached an Office communication concerning this application or proceeding.

The time period for reply, if any, is set in the attached communication.

Notice of the Office communication was sent electronically on above-indicated "Notification Date" to the following e-mail address(es):

DBRIPDocket@dbr.com
penelope.mongelluzzo@dbr.com

PTOL-90A (Rev. 04/07)

Applicant-Initiated Interview Summary	Application No.	Applicant(s)	
	14/129,401	ANDERSSON ET AL.	
	Examiner	Art Unit	
	Michele M. Kidwell	3761	

All participants (applicant, applicant's representative, PTO personnel):

(1) *Michele M. Kidwell*. (3)_____.

(2) *Nikolaus Schibli*. (4)_____.

Date of Interview: *07 October 2014*.

Type: ☒ Telephonic ☐ Video Conference
☐ Personal [copy given to: ☐ applicant ☐ applicant's representative]

Exhibit shown or demonstration conducted: ☐ Yes ☒ No.
If Yes, brief description: _____.

Issues Discussed ☐101 ☐112 ☒102 ☐103 ☐Others
(For each of the checked box(es) above, please describe below the issue and detailed description of the discussion)

Claim(s) discussed: *1 and 22-24*.

Identification of prior art discussed: *Gilman et al. (US 5,437,653)*.

Substance of Interview
(For each issue discussed, provide a detailed description and indicate if agreement was reached. Some topics may include: identification or clarification of a reference or a portion thereof, claim interpretation, proposed amendments, arguments of any applied references etc...)

Dr. Schibli discussed the amendment filed 10/6/14 with respect to the opening extending through the first absorbent layer thoughout the entire crotch region (cl. 23) and/or along a longitudinal center line such that the top sheet is in contact with the fluid flow control structure via the opening (cl. 22). The examiner indicated that such arguments would be considered when updating the search in the case, but that Gilman may still be applicable due to the various configurations disclosed by the reference. The examiner indicated that the representative may be contacted, if needed, to prepare any amendments that may expedite prosecution.

Applicant recordation instructions: The formal written reply to the last Office action must include the substance of the interview. (See MPEP section 713.04). If a reply to the last Office action has already been filed, applicant is given a non-extendable period of the longer of one month or thirty days from this interview date, or the mailing date of this interview summary form, whichever is later, to file a statement of the substance of the interview

Examiner recordation instructions: Examiners must summarize the substance of any interview of record. A complete and proper recordation of the substance of an interview should include the items listed in MPEP 713.04 for complete and proper recordation including the identification of the general thrust of each argument or issue discussed, a general indication of any other pertinent matters discussed regarding patentability and the general results or outcome of the interview, to include an indication as to whether or not agreement was reached on the issues raised.

☐ Attachment

/Michele M Kidwell/
Primary Examiner, Art Unit 3761

Summary of Record of Interview Requirements

Manual of Patent Examining Procedure (MPEP), Section 713.04, Substance of Interview Must be Made of Record
A complete written statement as to the substance of any face-to-face, video conference, or telephone interview with regard to an application must be made of record in the application whether or not an agreement with the examiner was reached at the interview.

Title 37 Code of Federal Regulations (CFR) § 1.133 Interviews
Paragraph (b)

In every instance where reconsideration is requested in view of an interview with an examiner, a complete written statement of the reasons presented at the interview as warranting favorable action must be filed by the applicant. An interview does not remove the necessity for reply to Office action as specified in §§ 1.111, 1.135. (35 U.S.C. 132)

37 CFR §1.2 Business to be transacted in writing.
All business with the Patent or Trademark Office should be transacted in writing. The personal attendance of applicants or their attorneys or agents at the Patent and Trademark Office is unnecessary. The action of the Patent and Trademark Office will be based exclusively on the written record in the Office. No attention will be paid to any alleged oral promise, stipulation, or understanding in relation to which there is disagreement or doubt.

The action of the Patent and Trademark Office cannot be based exclusively on the written record in the Office if that record is itself incomplete through the failure to record the substance of interviews.

It is the responsibility of the applicant or the attorney or agent to make the substance of an interview of record in the application file, unless the examiner indicates he or she will do so. It is the examiner's responsibility to see that such a record is made and to correct material inaccuracies which bear directly on the question of patentability.

Examiners must complete an Interview Summary Form for each interview held where a matter of substance has been discussed during the interview by checking the appropriate boxes and filling in the blanks. Discussions regarding only procedural matters, directed solely to restriction requirements for which interview recordation is otherwise provided for in Section 812.01 of the Manual of Patent Examining Procedure, or pointing out typographical errors or unreadable script in Office actions or the like, are excluded from the interview recordation procedures below. Where the substance of an interview is completely recorded in an Examiners Amendment, no separate Interview Summary Record is required.

The Interview Summary Form shall be given an appropriate Paper No., placed in the right hand portion of the file, and listed on the "Contents" section of the file wrapper. In a personal interview, a duplicate of the Form is given to the applicant (or attorney or agent) at the conclusion of the interview. In the case of a telephone or video-conference interview, the copy is mailed to the applicant's correspondence address either with or prior to the next official communication. If additional correspondence from the examiner is not likely before an allowance or if other circumstances dictate, the Form should be mailed promptly after the interview rather than with the next official communication.

The Form provides for recordation of the following information:
- Application Number (Series Code and Serial Number)
- Name of applicant
- Name of examiner
- Date of interview
- Type of interview (telephonic, video-conference, or personal)
- Name of participant(s) (applicant, attorney or agent, examiner, other PTO personnel, etc.)
- An indication whether or not an exhibit was shown or a demonstration conducted
- An identification of the specific prior art discussed
- An indication whether an agreement was reached and if so, a description of the general nature of the agreement (may be by attachment of a copy of amendments or claims agreed as being allowable). Note: Agreement as to allowability is tentative and does not restrict further action by the examiner to the contrary.
- The signature of the examiner who conducted the interview (if Form is not an attachment to a signed Office action)

It is desirable that the examiner orally remind the applicant of his or her obligation to record the substance of the interview of each case. It should be noted, however, that the Interview Summary Form will not normally be considered a complete and proper recordation of the interview unless it includes, or is supplemented by the applicant or the examiner to include, all of the applicable items required below concerning the substance of the interview.

A complete and proper recordation of the substance of any interview should include at least the following applicable items:
1) A brief description of the nature of any exhibit shown or any demonstration conducted,
2) an identification of the claims discussed,
3) an identification of the specific prior art discussed,
4) an identification of the principal proposed amendments of a substantive nature discussed, unless these are already described on the Interview Summary Form completed by the Examiner,
5) a brief identification of the general thrust of the principal arguments presented to the examiner,
   (The identification of arguments need not be lengthy or elaborate. A verbatim or highly detailed description of the arguments is not required. The identification of the arguments is sufficient if the general nature or thrust of the principal arguments made to the examiner can be understood in the context of the application file. Of course, the applicant may desire to emphasize and fully describe those arguments which he or she feels were or might be persuasive to the examiner.)
6) a general indication of any other pertinent matters discussed, and
7) if appropriate, the general results or outcome of the interview unless already described in the Interview Summary Form completed by the examiner.

Examiners are expected to carefully review the applicant's record of the substance of an interview. If the record is not complete and accurate, the examiner will give the applicant an extendable one month time period to correct the record.

Examiner to Check for Accuracy

If the claims are allowable for other reasons of record, the examiner should send a letter setting forth the examiner's version of the statement attributed to him or her. If the record is complete and accurate, the examiner should place the indication, "Interview Record OK" on the paper recording the substance of the interview along with the date and the examiner's initials.

To: DBRIPDocket@dbr.com,penelope.mongelluzzo@dbr.com,
From: PAIR_eOfficeAction@uspto.gov
Cc: PAIR_eOfficeAction@uspto.gov
Subject: Private PAIR Correspondence Notification for Customer Number 105855

Oct 14, 2014 05:23:34 AM

Dear PAIR Customer:

Drinker Biddle & Reath LLP
1500 K Street NW, Suite 1100
Washington, DC 20005
UNITED STATES

The following USPTO patent application(s) associated with your Customer Number, 105855 , have new outgoing correspondence. This correspondence is now available for viewing in Private PAIR.

The official date of notification of the outgoing correspondence will be indicated on the form PTOL-90 accompanying the correspondence.

Disclaimer:
The list of documents shown below is provided as a courtesy and is not part of the official file wrapper. The content of the images shown in PAIR is the official record.

Application	Document	Mailroom Date	Attorney Docket No.
14129401	INTV.SUM.APP	10/14/2014	049121-0366-00-US-504907

To view your correspondence online or update your email addresses, please visit us anytime at https://sportal.uspto.gov/secure/myportal/privatepair.

If you have any questions, please email the Electronic Business Center (EBC) at EBC@uspto.gov with 'e-Office Action' on the subject line or call 1-866-217-9197 during the following hours:

Monday - Friday 6:00 a.m. to 12:00 a.m.

Thank you for prompt attention to this notice,

UNITED STATES PATENT AND TRADEMARK OFFICE

PATENT APPLICATION INFORMATION RETRIEVAL SYSTEM

UNITED STATES PATENT AND TRADEMARK OFFICE

UNITED STATES DEPARTMENT OF COMMERCE
United States Patent and Trademark Office
Address: COMMISSIONER FOR PATENTS
P.O. Box 1450
Alexandria, Virginia 22313-1450
www.uspto.gov

APPLICATION NO.	FILING DATE	FIRST NAMED INVENTOR	ATTORNEY DOCKET NO.	CONFIRMATION NO.
14/129,401	12/26/2013	Patrik Andersson	049121-0366-00-US-504907	4049

105855 7590 10/23/2014
Drinker Biddle & Reath LLP
1500 K Street NW, Suite 1100
Washington, DC 20005

EXAMINER
KIDWELL, MICHELE M

ART UNIT	PAPER NUMBER
3761	

NOTIFICATION DATE	DELIVERY MODE
10/23/2014	ELECTRONIC

Please find below and/or attached an Office communication concerning this application or proceeding.

The time period for reply, if any, is set in the attached communication.

Notice of the Office communication was sent electronically on above-indicated "Notification Date" to the following e-mail address(es):

DBRIPDocket@dbr.com
penelope.mongelluzzo@dbr.com

PTOL-90A (Rev. 04/07)

Office Action Summary	Application No. 14/129,401	Applicant(s) ANDERSSON ET AL.	
	Examiner Michele M. Kidwell	Art Unit 3761	AIA (First Inventor to File) Status No

-- The MAILING DATE of this communication appears on the cover sheet with the correspondence address --

Period for Reply

A SHORTENED STATUTORY PERIOD FOR REPLY IS SET TO EXPIRE 3 MONTHS FROM THE MAILING DATE OF THIS COMMUNICATION.

- Extensions of time may be available under the provisions of 37 CFR 1.136(a). In no event, however, may a reply be timely filed after SIX (6) MONTHS from the mailing date of this communication.
- If NO period for reply is specified above, the maximum statutory period will apply and will expire SIX (6) MONTHS from the mailing date of this communication.
- Failure to reply within the set or extended period for reply will, by statute, cause the application to become ABANDONED (35 U.S.C. § 133). Any reply received by the Office later than three months after the mailing date of this communication, even if timely filed, may reduce any earned patent term adjustment. See 37 CFR 1.704(b).

Status

1)☒ Responsive to communication(s) filed on *10/06/14*.

☐ A declaration(s)/affidavit(s) under **37 CFR 1.130(b)** was/were filed on _____.

2a)☐ This action is **FINAL**. 2b)☒ This action is non-final.

3)☐ An election was made by the applicant in response to a restriction requirement set forth during the interview on _____; the restriction requirement and election have been incorporated into this action.

4)☐ Since this application is in condition for allowance except for formal matters, prosecution as to the merits is closed in accordance with the practice under *Ex parte Quayle*, 1935 C.D. 11, 453 O.G. 213.

Disposition of Claims*

5)☒ Claim(s) *1-17 and 19-24* is/are pending in the application.

5a) Of the above claim(s) _____ is/are withdrawn from consideration.

6)☐ Claim(s) _____ is/are allowed.

7)☒ Claim(s) *1-17 and 19-24* is/are rejected.

8)☐ Claim(s) _____ is/are objected to.

9)☐ Claim(s) _____ are subject to restriction and/or election requirement.

* If any claims have been determined allowable, you may be eligible to benefit from the **Patent Prosecution Highway** program at a participating intellectual property office for the corresponding application. For more information, please see http://www.uspto.gov/patents/init_events/pph/index.jsp or send an inquiry to PPHfeedback@uspto.gov.

Application Papers

10)☐ The specification is objected to by the Examiner.

11)☒ The drawing(s) filed on *12/26/13* is/are: a)☒ accepted or b)☐ objected to by the Examiner.

Applicant may not request that any objection to the drawing(s) be held in abeyance. See 37 CFR 1.85(a).

Replacement drawing sheet(s) including the correction is required if the drawing(s) is objected to. See 37 CFR 1.121(d).

Priority under 35 U.S.C. § 119

12)☐ Acknowledgment is made of a claim for foreign priority under 35 U.S.C. § 119(a)-(d) or (f).

Certified copies:

a)☐ All b)☐ Some** c)☐ None of the:

1.☐ Certified copies of the priority documents have been received.

2.☐ Certified copies of the priority documents have been received in Application No. _____.

3.☐ Copies of the certified copies of the priority documents have been received in this National Stage application from the International Bureau (PCT Rule 17.2(a)).

** See the attached detailed Office action for a list of the certified copies not received.

Attachment(s)

1) ☒ Notice of References Cited (PTO-892)

2) ☐ Information Disclosure Statement(s) (PTO/SB/08a and/or PTO/SB/08b) Paper No(s)/Mail Date _____.

3) ☐ Interview Summary (PTO-413) Paper No(s)/Mail Date. _____ .

4) ☐ Other: _____.

DETAILED ACTION

Continued Examination Under 37 CFR 1.114

A request for continued examination under 37 CFR 1.114, including the fee set forth in 37 CFR 1.17(e), was filed in this application after final rejection. Since this application is eligible for continued examination under 37 CFR 1.114, and the fee set forth in 37 CFR 1.17(e) has been timely paid, the finality of the previous Office action has been withdrawn pursuant to 37 CFR 1.114. Applicant's submission filed on October 6, 2014 has been entered.

Claim Rejections - 35 USC § 102

The following is a quotation of the appropriate paragraphs of pre-AIA 35 U.S.C. 102 that form the basis for the rejections under this section made in this Office action:

> A person shall be entitled to a patent unless –
>
> (b) the invention was patented or described in a printed publication in this or a foreign country or in public use or on sale in this country, more than one year prior to the date of application for patent in the United States.

Claims 1 – 3, 21 and 24 are rejected under pre-AIA 35 U.S.C. 102b as being anticipated by Chen et al. (US 6,492,574).

With reference to claims 1 – 2, Chen et al. (hereinafter "Chen") discloses an absorbent article (abstract) having a longitudinal direction, a transverse direction, side edges extending in the longitudinal direction, end edges extending in the transverse direction (figures 16 and 17) and comprising:

a fluid permeable topsheet (12),

a fluid impermeable backsheet, (14) and

an absorbent core (16) enclosed between the topsheet and the backsheet (col. 12, lines 16 - 24), said absorbent core comprising,

a first absorbent layer (50) having an opening extending therethrough (col. 16, lines 2 – 4),

a fluid flow control structure (24,30), and

a second absorbent layer (52) arranged between the fluid flow control structure and the fluid impermeable backsheet (figure 25B),

wherein a fluid flow control structure is arranged between the first absorbent layer and the backsheet (figure 25B), said fluid flow control structure being a layered structure comprising a non-perforated fibrous polymeric layer (col. 26, lines 12 - 41) and a first (col. 28, lines 17 – 18) perforated (col. 29, lines 23 – 25) polymeric layer, wherein the polymers in the first perforated polymeric layer are selected from the listed group (col. 28, lines 5 – 11) and has a basis weight as claimed as set forth in at least col. 28, lines 12 – 17.

With reference to claim 3, Chen discloses an absorbent article wherein the first perforated polymeric layer is as claimed as set forth in col. 28, lines 5 - 11.

As to claim 21, see the rejection of claim 1.

With reference to claim 24, see col. 17, lines 4 – 22.

Claim Rejections - 35 USC § 103

The following is a quotation of pre-AIA 35 U.S.C. 103(a) which forms the basis for all obviousness rejections set forth in this Office action:

> (a) A patent may not be obtained though the invention is not identically disclosed or described as set forth in section 102 of this title, if the differences between the subject matter sought to be patented and the prior art are such that the subject matter as a whole would have been obvious at the time the invention was made to a person having ordinary skill in the art to which said subject matter pertains. Patentability shall not be negatived by the manner in which the invention was made.

The factual inquiries set forth in *Graham v. John Deere Co.*, 383 U.S. 1, 148 USPQ 459 (1966), that are applied for establishing a background for determining obviousness under pre-AIA 35 U.S.C. 103(a) are summarized as follows:

1. Determining the scope and contents of the prior art.

2. Ascertaining the differences between the prior art and the claims at issue.

3. Resolving the level of ordinary skill in the pertinent art.

4. Considering objective evidence present in the application indicating obviousness or nonobviousness.

This application currently names joint inventors. In considering patentability of the claims under pre-AIA 35 U.S.C. 103(a), the examiner presumes that the subject matter of the various claims was commonly owned at the time any inventions covered therein were made absent any evidence to the contrary. Applicant is advised of the obligation under 37 CFR 1.56 to point out the inventor and invention dates of each claim that was not commonly owned at the time a later invention was made in order for the examiner to

consider the applicability of pre-AIA 35 U.S.C. 103(c) and potential pre-AIA 35 U.S.C. 102(e), (f) or (g) prior art under pre-AIA 35 U.S.C. 103(a).

Claims 4 - 8 and 12 – 16 are rejected under pre-AIA 35 U.S.C. 103(a) as being unpatentable over Chen et al. (US 6,492,574) and further in view of Gilman et al. (US 5,437,653).

As to claim 4, Chen teaches the invention substantially as claimed.

The difference between Chen and claim 4 is the provision that the apertures form protrusions on the second surface.

Gilman teaches an absorbent article wherein the first perforated polymeric layer is a three-dimensionally formed layer having penetrating apertures extending from a first surface of the first perforated polymeric layer towards a second surface of the first perforated polymeric layer (col. 5, lines 9 - 39) and forming protrusions on the second surface as set forth in at least figure 2.

Initially, the examiner contends that the protrusions may be present in the layer of Chen since Chen also provides an apertured layer as claimed. It appears that the protrusions are a necessary result of providing apertures within the layer.

Nevertheless, it would have been obvious to one of ordinary skill in the art to incorporate protrusions as claimed because the definitive aperturing of the layer which results in the protrusions allow for a rapid movement of body fluid downward as taught by Gilman in col. 5, lines 36 – 39.

As to claims 5 – 6, Gilman discloses an absorbent article wherein the first perforated polymeric layer is arranged with a second surface facing and/or facing away

from the non-perforated fibrous polymeric layer as set forth in col. 4, lines 39 – 65 and in the figures.

With respect to claim 7, Gilman discloses an absorbent article wherein the apertures have an average size as claimed as set forth in col. 5, lines 16 - 21.

As to claim 8, Chen teaches the invention substantially as claimed.

The difference between Chen and claim 8 is the provision that the first perforated polymeric layer has a specific open area.

It would have been obvious to one of ordinary skill in the art to modify the open area as desired since it has been held that a mere duplication of essential working parts of a device (i.e., apertures) is within the level of ordinary skill in the art.

As to claim 12, see the rejection of claim 4.

With respect to claims 13 and 14, see the rejection of claims 5 – 6.

Regarding claim 15, see the rejection of claim 7.

As to claim 16, see the rejection of claims 1 and 8.

Claims 9 – 11, 17, 19 – 20 and 22 – 23 are rejected under pre-AIA 35 U.S.C. 103(a) as being unpatentable over Chen et al. (US 6,492,574)

The difference between Chen and claim 9 is the provision that the layers of the fluid flow control structure are arranged in a specific order.

It would have been obvious to one of ordinary skill in the art to rearrange the layers of the fluid control layer as desired since the rearrangement of known parts of a device is within the level of ordinary skill in the art. Chen provides a multi layered

structure as claimed where any layer of the absorbent structure can be provided and duplicate and therefore arranged as claimed as shown in the figures.

The difference between Chen and claim 10 is the provision that the apertures of the layers are out of register with each other.

It would have been obvious to one of ordinary skill in the art to rearrange the apertures as desired since the rearrangement of known parts of a device is within the level of ordinary skill in the art.

With reference to claim 11, see the rejection of claim 1.

With reference to claim 17, see the rejection of claims 1 and 3.

The difference between Chen and claims 19 – 20 is the provision that the fluid flow control structure has a specific thickness and bending stiffness.

It would have been obvious to one of ordinary skill in the art to provide the fluid flow control structure with the desired thickness and/or bending stiffness because Gilman teaches that these properties may be varied as desired as set forth in at least col. 28, line 1 to col. 30, line 13.

The difference between Chen and claims 22 – 23 is the provision that the opening extends along specific portions of the article.

It would have been obvious to one of ordinary skill in the art to vary the location of the opening as desired because the arrangement and/or size of the element already disclosed by the prior art is within the level of ordinary skill in the art.

Response to Arguments

Applicant's arguments with respect to claims 1 – 17 and 19 - 24 have been considered but are moot because the arguments do not apply to any of the references being used in the current rejection.

Any inquiry concerning this communication or earlier communications from the examiner should be directed to Michele M. Kidwell whose telephone number is (571)272-4935. The examiner can normally be reached on Monday thru Friday.

If attempts to reach the examiner by telephone are unsuccessful, the examiner's supervisor, Tatyana Zalukaeva can be reached on 571-272-1115. The fax phone number for the organization where this application or proceeding is assigned is 571-273-8300.

Information regarding the status of an application may be obtained from the Patent Application Information Retrieval (PAIR) system. Status information for published applications may be obtained from either Private PAIR or Public PAIR. Status information for unpublished applications is available through Private PAIR only. For more information about the PAIR system, see http://pair-direct.uspto.gov. Should you have questions on access to the Private PAIR system, contact the Electronic Business Center (EBC) at 866-217-9197 (toll-free). If you would like assistance from a USPTO Customer Service Representative or access to the automated information system, call 800-786-9199 (IN USA OR CANADA) or 571-272-1000.

/Michele M Kidwell/
Primary Examiner, Art Unit 3761

Notice of References Cited	Application/Control No. 14/129,401	Applicant(s)/Patent Under Reexamination ANDERSSON ET AL.	
	Examiner Michele M. Kidwell	Art Unit 3761	Page 1 of 1

U.S. PATENT DOCUMENTS

*		Document Number Country Code-Number-Kind Code	Date MM-YYYY	Name	Classification
*	A	US-6,492,574	12-2002	Chen et al.	604/378
	B	US-			
	C	US-			
	D	US-			
	E	US-			
	F	US-			
	G	US-			
	H	US-			
	I	US-			
	J	US-			
	K	US-			
	L	US-			
	M	US-			

FOREIGN PATENT DOCUMENTS

*		Document Number Country Code-Number-Kind Code	Date MM-YYYY	Country	Name	Classification
	N					
	O					
	P					
	Q					
	R					
	S					
	T					

NON-PATENT DOCUMENTS

*		Include as applicable: Author, Title Date, Publisher, Edition or Volume, Pertinent Pages)
	U	
	V	
	W	
	X	

*A copy of this reference is not being furnished with this Office action. (See MPEP § 707.05(a).)
Dates in MM-YYYY format are publication dates. Classifications may be US or foreign.

EAST Search History

EAST Search History (Prior Art)

Ref #	Hits	Search Query	DBs	Default Operator	Plurals	Time Stamp
L1	381512	((first and second) or (upper and lower)) with (absorbent or core)	US-PGPUB; USPAT; USOCR; FPRS; EPO; JPO; DERWENT; IBM_TDB	OR	OFF	2014/10/19 18:44
L2	215111	(flow or acquisition or distribution or control or structure) with (polymeric or polyolefin polyester or polyamide)	US-PGPUB; USPAT; USOCR; FPRS; EPO; JPO; DERWENT; IBM_TDB	OR	OFF	2014/10/19 18:49
L3	8468	1 and 2	US-PGPUB; USPAT; USOCR; FPRS; EPO; JPO; DERWENT; IBM_TDB	OR	OFF	2014/10/19 18:49
L4	31179	(polymeric or polyolefin polyester or polyamide)same "between" same (absorbent or core)	US-PGPUB; USPAT; USOCR; FPRS; EPO; JPO; DERWENT; IBM_TDB	OR	OFF	2014/10/19 18:50
L5	2833	3 and 4	US-PGPUB; USPAT; USOCR; FPRS; EPO; JPO; DERWENT; IBM_TDB	OR	OFF	2014/10/19 18:50
L6	207633	(absorbent or core) same (aperture or opening or slit or slot)	US-PGPUB; USPAT; USOCR	OR	OFF	2014/10/19 18:50
L7	1015	5 and 6	US-PGPUB; USPAT; USOCR	OR	OFF	2014/10/19 18:50
L8	404	7 and (absorbent adj article or diaper)	US-PGPUB; USPAT; USOCR	OR	OFF	2014/10/19 18:50
L9	2	("2001/0027302").URPN.	USPAT	OR	OFF	2014/10/19 19:06
L10	4	("5437653").PN.	US-PGPUB; USPAT; USOCR; FPRS;	OR	OFF	2014/10/19 21:24

			EPO; JPO; DERWENT; IBM_TDB			
S1	46	("3156242" | "3640829" | "3869310" | "3870593" | "3932682" | "3953566" | "3962153" | "3989867" | "4059114" | "4096227" | "4100238" | "4110392" | "4178271" | "4187390" | "4194041" | "4197148" | "4197371" | "4308303" | "4347844" | "4539256" | "4560611" | "4591523" | "4609584" | "4622036" | "4648876" | "4758239" | "4818600" | "5441056" | "5591510" | "5695871" | "5730739").PN. OR ("6277104").URPN.	US-PGPUB; USPAT; USOCR	OR	OFF	2014/03/14 10:07
S2	64	absorbent adj article and aperture same (absorbent or core) same polymeric	US-PGPUB; USPAT; USOCR	OR	OFF	2014/03/14 10:16
S3	87	absorbent adj article and aperture same (absorbent or core) same polymeric	US-PGPUB; USPAT; USOCR; FPRS; EPO; JPO; DERWENT; IBM_TDB	OR	OFF	2014/03/14 10:16
S4	37	S3 AND ((A61F13/512 OR A61F13/5146 OR A61F13/53717 OR A61F13/53743 OR A61F2013/51355 OR A61F2013/53782 OR A61F13/494 OR A61F13/5116 OR A61F13/51305 OR A61F13/51401 OR A61F13/51478 OR A61F13/53).CPC.)	US-PGPUB; USPAT; USOCR; FPRS; EPO; JPO; DERWENT; IBM_TDB	OR	OFF	2014/03/14 10:34
S5	30	"6241714"	US-PGPUB; USPAT; USOCR; FPRS; EPO; JPO; DERWENT; IBM_TDB	OR	OFF	2014/03/14 10:47
S6	2	("6241714").PN.	US-PGPUB; USPAT; USOCR; FPRS; EPO; JPO; DERWENT; IBM_TDB	OR	OFF	2014/03/14 10:47
S7	9	(("6492574") or ("6627791") or ("4591523")).PN.	US-PGPUB; USPAT; USOCR; FPRS; EPO; JPO; DERWENT; IBM_TDB	OR	OFF	2014/03/14 11:00
S8	0	S7 and polymerica	US-PGPUB; USPAT; USOCR; FPRS; EPO; JPO; DERWENT; IBM_TDB	OR	OFF	2014/03/14 11:01
S9	6	S7 and polymeric	US-PGPUB; USPAT;	OR	OFF	2014/03/14 11:01

			USOCR; FPRS; EPO; JPO; DERWENT; IBM_TDB			
S10	17591	(A61F13/512 OR A61F13/5146 OR A61F13/53717 OR A61F13/53743 OR A61F2013/51355 OR A61F2013/53782 OR A61F13/494 OR A61F13/5116 OR A61F13/51305 OR A61F13/51401 OR A61F13/51478 OR A61F13/53).CPC.	US-PGPUB; USPAT; USOCR; FPRS; EPO; JPO; DERWENT; IBM_TDB	OR	OFF	2014/03/14 11:02
S11	1876	S10 and polymeric	US-PGPUB; USPAT; USOCR; FPRS; EPO; JPO; DERWENT; IBM_TDB	OR	OFF	2014/03/14 11:02
S12	585	S10 and polymeric same (perforated or apertured or opening or slot or slit)	US-PGPUB; USPAT; USOCR; FPRS; EPO; JPO; DERWENT; IBM_TDB	OR	OFF	2014/03/14 11:04
S13	429	S12 and absorbent adj article	US-PGPUB; USPAT; USOCR; FPRS; EPO; JPO; DERWENT; IBM_TDB	OR	OFF	2014/03/14 11:05
S14	2696	topsheet same (aperture or perforation or slot or slit or opening)	US-PGPUB; USPAT; USOCR; FPRS; EPO; JPO; DERWENT; IBM_TDB	OR	OFF	2014/03/14 11:05
S15	138	S13 and S14	US-PGPUB; USPAT; USOCR; FPRS; EPO; JPO; DERWENT; IBM_TDB	OR	OFF	2014/03/14 11:05
S16	2	("5591149").PN.	US-PGPUB; USPAT; USOCR; FPRS; EPO; JPO; DERWENT; IBM_TDB	OR	OFF	2014/03/14 11:47
S17	327698	(absorbent or core) same (aperture or perforation or slot or slit or opening)	US-PGPUB; USPAT; USOCR; FPRS; EPO; JPO; DERWENT; IBM_TDB	OR	OFF	2014/03/17 12:23

S18	9698	(polymeric or polyolefin or polyester or polyamide) same basis adj weight	US-PGPUB; USPAT; USOCR; FPRS; EPO; JPO; DERWENT; IBM_TDB	OR	OFF	2014/03/17 12:24
S19	1933	S17 and S18	US-PGPUB; USPAT; USOCR; FPRS; EPO; JPO; DERWENT; IBM_TDB	OR	OFF	2014/03/17 12:24
S20	23541	fibrous same polymeric	US-PGPUB; USPAT; USOCR; FPRS; EPO; JPO; DERWENT; IBM_TDB	OR	OFF	2014/03/17 12:24
S21	753	S19 and S20	US-PGPUB; USPAT; USOCR; FPRS; EPO; JPO; DERWENT; IBM_TDB	OR	OFF	2014/03/17 12:24
S22	43934	absorbent adj article	US-PGPUB; USPAT; USOCR; FPRS; EPO; JPO; DERWENT; IBM_TDB	OR	OFF	2014/03/17 12:24
S23	666	S21 and S22	US-PGPUB; USPAT; USOCR; FPRS; EPO; JPO; DERWENT; IBM_TDB	OR	OFF	2014/03/17 12:24
S24	87	absorbent adj article and aperture same (absorbent or core) same polymeric	US-PGPUB; USPAT; USOCR; FPRS; EPO; JPO; DERWENT; IBM_TDB	OR	OFF	2014/03/17 12:25
S25	37	S24 AND ((A61F13/512 OR A61F13/5146 OR A61F13/53717 OR A61F13/53743 OR A61F2013/51355 OR A61F2013/53782 OR A61F13/494 OR A61F13/5116 OR A61F13/51305 OR A61F13/51401 OR A61F13/51478 OR A61F13/53).CPC.)	US-PGPUB; USPAT; USOCR; FPRS; EPO; JPO; DERWENT; IBM_TDB	OR	OFF	2014/03/17 12:25
S26	86	S23 AND ((A61F13/512 OR A61F13/5146 OR A61F13/53717 OR A61F13/53743 OR A61F2013/51355 OR A61F2013/53782 OR A61F13/494 OR A61F13/5116 OR A61F13/51305 OR	US-PGPUB; USPAT; USOCR; FPRS; EPO; JPO;	OR	OFF	2014/03/17 12:25

		A61F13/51401 OR A61F13/51478 OR A61F13/53).CPC.)	DERWENT; IBM_TDB			
S27	212	("1863333" | "1910872" | "2047054" | "2295016" | "2295439" | "2468876" | "2564689" | "2582344" | "2772678" | "2787271" | "2833283" | "2900980" | "2960089" | "3067747" | "3073308" | "3088463" | "3143113" | "3343543" | "3344789" | "3375827" | "3397697" | "3403681" | "3441023" | "3463154" | "3477433" | "3525337" | "3545442" | "3589956" | "3593717" | "3654060" | "3654929" | "3667468" | "3699966" | "3746592" | "3749627" | "3759262" | "3771525" | "3865112" | "3886941" | "3888256" | "3929135" | "3932322" | "3939838" | "3945386" | "3954107" | "3965906" | "3967623" | "3994299" | "4014341" | "4029101" | "4037602" | "4057061" | "4069822" | "4079739" | "4100324" | "4195634" | "4223677" | "4232674" | "4276338" | "4285343" | "4315507" | "4323068" | "4323069" | "4324246" | "4327731" | "4338371" | "4357939" | "4372312" | "4397644" | "4411660" | "4433972" | "4507121" | "4531945" | "4540414" | "4551142" | "4589876" | "4608047" | "4623340" | "4626254" | "4627848" | "4629643" | "4631062" | "4636209" | "4676786" | "4687478" | "4690679" | "4699620" | "4705513" | "4710186" | "4731071" | "4738674" | "4741941" | "4755413" | "4755905" | "4781962" | "4798601" | "4798603" | "4798604" | "4806411" | "4822668" | "4846813" | "4846824" | "4880419" | "4886632" | "4892534" | "4895749" | "4908026" | "4938756" | "4950264" | "4963139" | "4973325" | "4988344" | "4988345" | "5009653" | "5013309" | "5037409" | "5037412" | "5048589" | "5125918" | "5134007" | "5135521" | "5188625" | "5201727" | "5219341" | "5248309").PN. OR ("5257982" | "5294478" | "5300054" | "5300055" | "5304161" | "5330457" | "5348547" | "5356405" | "5368926" | "5370764" | "5382400" | "5399412" | "5415640" | "5423787" | "5423788" | "5429629" | "5429630" | "5437653" | "5439458" | "5454800" | "5533991" | "5609588" | "5611879").PN. OR ("5810798").URPN.	US-PGPUB; USPAT; USOCR	OR	OFF	2014/03/17 12:55
S28	34	("0810119" | "0810130" | "2418907" | "2896618" | "3403681" | "3559650" | "3563241" | "3929135" | "3945386" | "4055180" | "4323069" | "5342336" | "5437653" | "5527300" | "5569226" | "5603707" | "5788684" | "5803920" | "5810798" | "5961505" | "6011195" | "6206865" | "H001511").PN. OR ("6984225").URPN.	US-PGPUB; USPAT; USOCR	OR	OFF	2014/03/17 12:57
S29	527	(perforated or apertured) same	US-PGPUB;	OR	OFF	2014/10/07

		(polymeric or polyolefin or polyester or polyamide) same basis adj weight	USPAT; USOCR; FPRS; EPO; JPO; DERWENT; IBM_TDB			09:32
S30	46239	absorbent adj article	US-PGPUB; USPAT; USOCR; FPRS; EPO; JPO; DERWENT; IBM_TDB	OR	OFF	2014/10/07 09:32
S31	257	S29 and S30	US-PGPUB; USPAT; USOCR; FPRS; EPO; JPO; DERWENT; IBM_TDB	OR	OFF	2014/10/07 09:33
S32	64196	((first and second) or (upper and lower)) same absorbent	US-PGPUB; USPAT; USOCR; FPRS; EPO; JPO; DERWENT; IBM_TDB	OR	OFF	2014/10/07 09:33
S33	208	S31 and S32	US-PGPUB; USPAT; USOCR; FPRS; EPO; JPO; DERWENT; IBM_TDB	OR	OFF	2014/10/07 09:33
S34	10540	((first and second) or (upper and lower)) same absorbent same (aperture or apertured or opening)	US-PGPUB; USPAT; USOCR; FPRS; EPO; JPO; DERWENT; IBM_TDB	OR	OFF	2014/10/07 09:35
S35	61	S33 and S34	US-PGPUB; USPAT; USOCR; FPRS; EPO; JPO; DERWENT; IBM_TDB	OR	OFF	2014/10/07 09:36
S36	621	(perforated or apertured) same (polymeric or polyolefin or polyester or polyamide) same "between" same absorbent	US-PGPUB; USPAT; USOCR; FPRS; EPO; JPO; DERWENT; IBM_TDB	OR	OFF	2014/10/07 09:39
S37	621	(perforated or apertured) same (polymeric or polyolefin or polyester or polyamide) same "between" same absorbent	US-PGPUB; USPAT; USOCR; FPRS; EPO; JPO; DERWENT;	OR	OFF	2014/10/07 09:39

			IBM_TDB			
S38	174	S37 and S32 and S34	US-PGPUB; USPAT; USOCR; FPRS; EPO; JPO; DERWENT; IBM_TDB	OR	OFF	2014/10/07 09:40
S39	126	S30 and S38	US-PGPUB; USPAT; USOCR; FPRS; EPO; JPO; DERWENT; IBM_TDB	OR	OFF	2014/10/07 09:40
S40	1	"14129401"	US-PGPUB; USPAT; USOCR; FPRS; EPO; JPO; DERWENT; IBM_TDB	OR	OFF	2014/10/07 09:46
S41	1920	(A61F13/53717).CPC.	US-PGPUB; USPAT; USOCR; FPRS; EPO; JPO; DERWENT; IBM_TDB	OR	OFF	2014/10/07 09:47
S42	54	S34 and S41	US-PGPUB; USPAT; USOCR; FPRS; EPO; JPO; DERWENT; IBM_TDB	OR	OFF	2014/10/07 09:47
S43	214	("1863333" | "1910872" | "2047054" | "2295016" | "2295439" | "2468876" | "2564689" | "2582344" | "2772678" | "2787271" | "2833283" | "2900980" | "2960089" | "3067747" | "3073308" | "3088463" | "3143113" | "3343543" | "3344789" | "3375827" | "3397697" | "3403681" | "3441023" | "3463154" | "3477433" | "3525337" | "3545442" | "3589956" | "3593717" | "3654060" | "3654929" | "3667468" | "3699966" | "3746592" | "3749627" | "3759262" | "3771525" | "3865112" | "3886941" | "3888256" | "3929135" | "3932322" | "3939838" | "3945386" | "3954107" | "3965906" | "3967623" | "3994299" | "4014341" | "4029101" | "4037602" | "4057061" | "4069822" | "4079739" | "4100324" | "4195634" | "4223677" | "4232674" | "4276338" | "4285343" | "4315507" | "4323068" | "4323069" | "4324246" | "4327731" | "4338371" | "4357939" | "4372312" | "4397644" | "4411660" | "4433972" | "4507121" | "4531945" | "4540414" | "4551142" | "4589876" | "4608047" | "4623340" |	US-PGPUB; USPAT; USOCR	OR	OFF	2014/10/07 09:48

		"4626254" | "4627848" | "4629643" | "4631062" | "4636209" | "4676786" | "4687478" | "4690679" | "4699620" | "4705513" | "4710186" | "4731071" | "4738674" | "4741941" | "4755413" | "4755905" | "4781962" | "4798601" | "4798603" | "4798604" | "4806411" | "4822668" | "4846813" | "4846824" | "4880419" | "4886632" | "4892534" | "4895749" | "4908026" | "4938756" | "4950264" | "4963139" | "4973325" | "4988344" | "4988345" | "5009653" | "5013309" | "5037409" | "5037412" | "5048589" | "5125918" | "5134007" | "5135521" | "5188625" | "5201727" | "5219341" | "5248309").PN. OR ("5257982" | "5294478" | "5300054" | "5300055" | "5304161" | "5330457" | "5348547" | "5356405" | "5368926" | "5370764" | "5382400" | "5399412" | "5415640" | "5423787" | "5423788" | "5429629" | "5429630" | "5437653" | "5439458" | "5454800" | "5533991" | "5609588" | "5611879").PN. OR ("5810798").URPN.				
S44	176	("20040147889" | "2696618" | "3284273" | "3371667" | "3489148" | "3491759" | "3532097" | "3585998" | "3593717" | "3759262" | "3846594" | "3860003" | "3875942" | "3890973" | "3896807" | "3911173" | "3929135" | "3945386" | "3964486" | "3967623" | "4027672" | "4047531" | "4055180" | "4173042" | "4321924" | "4324246" | "4324247" | "4342314" | "4360021" | "4381781" | "4381782" | "4385632" | "4392861" | "4397644" | "4401712" | "4463045" | "4501586" | "4515595" | "4556560" | "4573986" | "4609518" | "4610678" | "4613447" | "4622036" | "4623339" | "4629643" | "4643727" | "4657537" | "4662875" | "4662877" | "4673402" | "4676785" | "4678464" | "4685909" | "4695278" | "4699823" | "4704112" | "4710189" | "4723953" | "4785996" | "4790836" | "4795454" | "4798603" | "4804378" | "4808178" | "4816025" | "4834735" | "4842593" | "4842666" | "4846815" | "4857067" | "4885204" | "4888231" | "4892528" | "4892536" | "4894060" | "4898642" | "4908026" | "4909803" | "4935022" | "4938753" | "4946527" | "4963140" | "4968312" | "4988344" | "4988345" | "4990147" | "5006394" | "5026364" | "5037409" | "5037416" | "5062840" | "5071681" | "5098764" | "5124197" | "5134007" | "5135521" | "5137537" | "5143779" | "5147343" | "5147345" | "5149335" | "5151092" | "5171236" | "5171238" | "5176672" | "5192277" | "5192606" | "5204158" | "5207663" | "5221274" | "5244711" | "5260345" | "5269775" | "5281208" | "5304159" |	US-PGPUB; USPAT; USOCR	OR	OFF	2014/10/07 09:49

		"5304160" | "5306266" | "5330459" | "5342338" | "5342342" | "5344516" | "5352217" | "5356405").PN. OR ("5387207" | "5387209" | "5397318" | "5429632" | "5439458" | "5439459" | "5462541" | "5468236" | "5514121" | "5518801" | "5520674" | "5525346" | "5540671" | "5545155" | "5554142" | "5569234" | "5571096" | "5579722" | "5580411" | "5586978" | "5603707" | "5607760" | "5609587" | "5628097" | "5635191" | "5643588" | "5650222" | "5653703" | "5669897" | "5674213" | "5676661" | "5776122" | "5779690" | "5810798" | "5824172" | "5830203" | "5865823" | "5925026" | "5938650" | "5941863" | "5957906" | "5976665" | "6004306" | "6010491" | "6703537" | "H001670").PN. OR ("8569568").URPN.				
S45	204	("3375827" | "3491759" | "3518726" | "3523536" | "3528421" | "3542634" | "3593717" | "3693622" | "3736931" | "3749627" | "3759262" | "3805790" | "3888248" | "3949127" | "3954107" | "3967623" | "4079739" | "4195634" | "4321924" | "4323069" | "4324246" | "4333462" | "4333463" | "4333465" | "4341207" | "4341217" | "4392861" | "4397644" | "4469734" | "4480000" | "4518451" | "4531945" | "4578070" | "4592751" | "4596567" | "4608292" | "4623340" | "4704112" | "4755413").PN. OR ("4908026").URPN.	US-PGPUB; USPAT; USOCR	OR	OFF	2014/10/07 09:56
S46	10	("3371667" | "4781962" | "4908026" | "5188625" | "5591149" | "5613960" | "6916969").PN. OR ("7674949").URPN.	US-PGPUB; USPAT; USOCR	OR	OFF	2014/10/07 09:58
S47	10	S32 and S34 and S36 and S41	US-PGPUB; USPAT; USOCR; FPRS; EPO; JPO; DERWENT; IBM_TDB	OR	OFF	2014/10/07 10:00
S48	5414	(fluid adj control or fluid adj flow or wicking or transfer)same ((first and second) or (upper and lower)) same absorbent	US-PGPUB; USPAT; USOCR; FPRS; EPO; JPO; DERWENT; IBM_TDB	OR	OFF	2014/10/07 10:02
S49	1203	S30 and S48	US-PGPUB; USPAT; USOCR; FPRS; EPO; JPO; DERWENT; IBM_TDB	OR	OFF	2014/10/07 10:02
S50	2836	(fluid adj control or fluid adj flow or wicking or transfer)same "between" same ((first and second) or (upper and lower)) same absorbent	US-PGPUB; USPAT; USOCR; FPRS; EPO; JPO;	OR	OFF	2014/10/07 10:03

			DERWENT; IBM_TDB			
S51	665	S30 and S50	US-PGPUB; USPAT; USOCR; FPRS; EPO; JPO; DERWENT; IBM_TDB	OR	OFF	2014/10/07 10:03
S52	57	S41 and S51	US-PGPUB; USPAT; USOCR; FPRS; EPO; JPO; DERWENT; IBM_TDB	OR	OFF	2014/10/07 10:03
S53	105	"5437653"	US-PGPUB; USPAT; USOCR; FPRS; EPO; JPO; DERWENT; IBM_TDB	OR	OFF	2014/10/07 10:04
S54	4	("5437653").PN.	US-PGPUB; USPAT; USOCR; FPRS; EPO; JPO; DERWENT; IBM_TDB	OR	OFF	2014/10/07 10:04
S55	46303	absorbent adj article	US-PGPUB; USPAT; USOCR; FPRS; EPO; JPO; DERWENT; IBM_TDB	OR	OFF	2014/10/19 15:38
S56	208448	core same (perforated or opening)	US-PGPUB; USPAT; USOCR; FPRS; EPO; JPO; DERWENT; IBM_TDB	OR	OFF	2014/10/19 15:38
S57	115297	core same (polymeric or polyolefin polyester or polyamide)	US-PGPUB; USPAT; USOCR; FPRS; EPO; JPO; DERWENT; IBM_TDB	OR	OFF	2014/10/19 15:39
S58	1017	S55 and S56 and S57	US-PGPUB; USPAT; USOCR; FPRS; EPO; JPO; DERWENT; IBM_TDB	OR	OFF	2014/10/19 15:40
S59	557647	core same ((first and second) or (upper and lower))	US-PGPUB; USPAT; USOCR;	OR	OFF	2014/10/19 15:40

			FPRS; EPO; JPO; DERWENT; IBM_TDB			
S60	776	S58 and S59	US-PGPUB; USPAT; USOCR; FPRS; EPO; JPO; DERWENT; IBM_TDB	OR	OFF	2014/10/19 15:41
S61	1	"14129401"	US-PGPUB; USPAT; USOCR; FPRS; EPO; JPO; DERWENT; IBM_TDB	OR	OFF	2014/10/19 15:44
S62	18	S60 AND ((A61F13/53717 OR A61F13/53756).CPC.)	US-PGPUB; USPAT; USOCR; FPRS; EPO; JPO; DERWENT; IBM_TDB	OR	OFF	2014/10/19 15:45
S63	75	("3929135" | "3965906" | "3994299" | "4014341" | "4055180" | "4184902" | "4282874" | "4324246" | "4324247" | "4327730" | "4463045" | "4552709" | "4601868" | "4609518" | "4629643" | "4690679" | "4695278" | "4726976" | "4738675" | "4764234" | "4764242" | "4780352" | "4795451" | "4795454" | "4804379" | "4806411" | "4900318" | "4988344" | "4994037" | "5231122" | "5263948" | "5263949" | "5294478" | "5300054" | "5304161" | "5308344" | "5387208" | "5460622" | "5486167" | "5514105" | "5520673" | "5522809" | "5558655" | "5591149" | "5599334" | "5603707" | "5607414" | "5609588" | "5648142" | "5667864" | "5681300" | "5730737" | "5752945" | "5817081" | "5820615" | "5827254" | "5833678" | "5843055" | "5855572" | "5891120" | "5895379" | "5906602" | "5998696" | "D362120" | "D364040" | "H001575").PN. OR ("6455753").URPN.	US-PGPUB; USPAT; USOCR	OR	OFF	2014/10/19 15:48
S64	2	("6241714").PN.	US-PGPUB; USPAT; USOCR; FPRS; EPO; JPO; DERWENT; IBM_TDB	OR	OFF	2014/10/19 16:14
S65	37	("0810119" | "0810130" | "2418907" | "2896618" | "3403681" | "3563241" | "3945386" | "5342336" | "5810798" | "5961505" | "6011195" | "H001511").PN. OR ("6241714").URPN.	US-PGPUB; USPAT; USOCR	OR	OFF	2014/10/19 16:14
S66	98	("3054148" | "3644158" | "3860003" | "3911173" | "3939135" | "3945386" |	US-PGPUB; USPAT;	OR	OFF	2014/10/19 16:15

		"3965906" | "3967623" | "3994299" | "4055180" | "4151240" | "4253461" | "4285343" | "4323069" | "4324246" | "4324247" | "4342314" | "4351784" | "4395215" | "4397704" | "4456570" | "4463045" | "4508256" | "4509908" | "4535020" | "4541794" | "4543299" | "4573986" | "4589876" | "4597760" | "4597761" | "4609518" | "4610678" | "4629643" | "4636161" | "4644623" | "4673402" | "4687478" | "4695278" | "4695422" | "4704115" | "4738676" | "4772444" | "4778644" | "4781710" | "4785966" | "4834735" | "4839216" | "4842666" | "4888231" | "4895749" | "4895984" | "4909802" | "4909803" | "4917697" | "4939135" | "4950264" | "4964860" | "4995930" | "5007906" | "5009653" | "5268213" | "5300054" | "5342334" | "5342338" | "5364382" | "5382217" | "5478335" | "5490846" | "5603707" | "5614283" | "5628856" | "5632275" | "5635275" | "5645672" | "5648142" | "5693037" | "5700254" | "5728446" | "5770144" | "5810798" | "5830202" | "5846230" | "5876388" | "5894044" | "5945196" | "5997986" | "6022607" | "6117523" | "6168849" | "6241714" | "6245961" | "6603052" | "H001670" | "RE26152").PN. OR ("7378568").URPN.	USOCR			
S67	61	("0810122" | "0810123" | "0810125" | "0810127" | "0810130" | "2024976" | "3364931" | "3592194" | "3699966" | "3749627" | "3828786" | "3897784" | "3954107" | "4029101" | "4195634" | "4333463" | "4731065" | "4834735" | "4988344" | "4988345" | "5013309" | "5047023" | "5048489" | "5048589" | "5062840" | "5134007" | "5176672" | "5294478" | "5330459" | "5399412" | "5401267" | "5437653" | "5439458" | "5451442").PN. OR ("6011195").URPN.	US-PGPUB; USPAT; USOCR	OR	OFF	2014/10/19 16:27
S68	79	("2295439" | "2564689" | "2900980" | "3676242" | "3888254" | "3929135" | "3945386" | "3965906" | "3967623" | "3994299" | "4014341" | "4285342" | "4323068" | "4323069" | "4324246" | "4333465" | "4340563" | "4381782" | "4397644" | "4480000" | "4519799" | "4636209" | "4675013" | "4676786" | "4690679" | "4710186" | "4725473" | "4741941" | "4755413" | "4762520" | "4798603" | "4798604" | "4806411" | "4878974" | "4908026").PN. OR ("5961505").URPN.	US-PGPUB; USPAT; USOCR	OR	OFF	2014/10/19 16:30
S69	31179	(polymeric or polyolefin polyester or polyamide)same "between" same (absorbent or core)	US-PGPUB; USPAT; USOCR; FPRS; EPO; JPO; DERWENT; IBM_TDB	OR	OFF	2014/10/19 16:45

S70	2653	S55 and S69	US-PGPUB; USPAT; USOCR; FPRS; EPO; JPO; DERWENT; IBM_TDB	OR	OFF	2014/10/19 16:45
S71	475	S56 and S70	US-PGPUB; USPAT; USOCR; FPRS; EPO; JPO; DERWENT; IBM_TDB	OR	OFF	2014/10/19 16:46
S72	101946	(flow or acquisition or distribution or control or structure) with "between" with (absorbent or core)	US-PGPUB; USPAT; USOCR; FPRS; EPO; JPO; DERWENT; IBM_TDB	OR	OFF	2014/10/19 16:49
S73	4811	S55 and S72	US-PGPUB; USPAT; USOCR; FPRS; EPO; JPO; DERWENT; IBM_TDB	OR	OFF	2014/10/19 16:50
S74	432824	(flow or acquisition or distribution or control or structure) same (polymeric or polyolefin polyester or polyamide)	US-PGPUB; USPAT; USOCR; FPRS; EPO; JPO; DERWENT; IBM_TDB	OR	OFF	2014/10/19 16:50
S75	2330	S73 and S74	US-PGPUB; USPAT; USOCR; FPRS; EPO; JPO; DERWENT; IBM_TDB	OR	OFF	2014/10/19 16:50
S76	131	S75 AND ((A61F13/53717 OR A61F13/53756).CPC.)	US-PGPUB; USPAT; USOCR; FPRS; EPO; JPO; DERWENT; IBM_TDB	OR	OFF	2014/10/19 16:51
S77	35	"9309744"	US-PGPUB; USPAT; USOCR; FPRS; EPO; JPO; DERWENT; IBM_TDB	OR	OFF	2014/10/19 16:59
S78	37	"0596532"	US-PGPUB; USPAT; USOCR; FPRS; EPO; JPO;	OR	OFF	2014/10/19 17:00

			DERWENT; IBM_TDB			
S79	108	("3029817" | "3046986" | "3338992" | "3341394" | "3375448" | "3502763" | "3542615" | "3667468" | "3692618" | "3749627" | "3802817" | "3849241" | "3855046" | "3860002" | "3871378" | "3897784" | "3984272" | "4016628" | "4027672" | "4093765" | "4100324" | "4340563" | "4494278" | "4636209" | "4640810" | "4795455" | "4818464" | "4988344" | "5047023" | "5057368" | "5069970" | "5108820" | "5108827" | "5147345" | "5231122" | "5277976" | "5281208" | "5300054" | "5304161" | "5318554" | "5330456" | "5336552" | "5348547" | "5364382" | "5366451" | "5374260" | "5382400" | "5397316" | "5429629" | "5437653" | "5439458" | "5454800" | "5460622" | "5466232" | "5466410" | "5466513" | "5476711" | "5486167" | "5514104" | "5527171" | "5549589" | "5558655" | "5562650" | "5603707" | "5607414" | "5613962" | "5634915" | "5647862" | "5647863" | "5649916" | "5662633" | "5665082" | "5669895" | "5695487" | "5728085" | "5730737" | "5785697" | "5797894" | "5807362" | "5817394" | "5846232" | "RE29789").PN. OR ("6348253").URPN.	US-PGPUB; USPAT; USOCR	OR	OFF	2014/10/19 17:01
S80	54	("4699619" | "5288348" | "5549589" | "5569226" | "5593401" | "5607414" | "5653702" | "5873869" | "5879343" | "5885268" | "5891120" | "5954705" | "6037518" | "6103953" | "6107537").PN. OR ("6420626").URPN.	US-PGPUB; USPAT; USOCR	OR	OFF	2014/10/19 17:05
S81	6	("20030208175" | "20060206073" | "5614283" | "6420626" | "6790798" | "8263820").PN. OR ("8466336").URPN.	US-PGPUB; USPAT; USOCR	OR	OFF	2014/10/19 17:05
S82	93	("3929135" | "4360021" | "4519798" | "4622036" | "4994053" | "5147345" | "5151091" | "5295986").PN. OR ("5614283").URPN.	US-PGPUB; USPAT; USOCR	OR	OFF	2014/10/19 17:06
S83	42	("20020133132" | "20040013852" | "20040043189" | "20040116029" | "20050064136" | "20050118393" | "20050256475" | "20050261649" | "20080114317" | "20100069867" | "3097787" | "3945386" | "3967623" | "4323069" | "4324247" | "4626254" | "4637819" | "4726976" | "5078710" | "5158819" | "5171238" | "5342334" | "5352217" | "5368909" | "5368910" | "5387209" | "5439458" | "5500270" | "5509915" | "5603707" | "5614283" | "5643240" | "5846230" | "5998696" | "6103953" | "6247914" | "6461716" | "6468626" | "6627791" | "6911573" | "7722588").PN. OR ("8674171").URPN.	US-PGPUB; USPAT; USOCR	OR	OFF	2014/10/19 17:07
S84	19	("3881489" | "3989867" | "4306559" | "4681793" | "4772444" | "5591510" | "6232521" | "6413247" | "6436080").PN.	US-PGPUB; USPAT; USOCR	OR	OFF	2014/10/19 17:11

		OR ("6627791").URPN.				
S85	93	("3929135" | "4360021" | "4519798" | "4622036" | "4994053" | "5147345" | "5151091" | "5295986").PN. OR ("5614283").URPN.	US-PGPUB; USPAT; USOCR	OR	OFF	2014/10/19 17:15
S86	28	("20020133132" | "20040043189" | "20100121298" | "3929135" | "3945386" | "3967623" | "4323069" | "4324247" | "4456570" | "4726976" | "5078710" | "5171238" | "5342334" | "5352217" | "5368909" | "5387209" | "5439458" | "5509915" | "5533991" | "5603707" | "5614283" | "5643240" | "5846230" | "5897543" | "6180052" | "6413247" | "6627791" | "7858842").PN. OR ("8581020").URPN.	US-PGPUB; USPAT; USOCR	OR	OFF	2014/10/19 17:16

10/19/2014 10:09:26 PM
C:\Users\mkidwell\Documents\EAST\Workspaces\14129401.wsp

Search Notes	Application/Control No.	Applicant(s)/Patent Under Reexamination
	14129401	ANDERSSON ET AL.
	Examiner	**Art Unit**
	MICHELE M KIDWELL	3761

CPC- SEARCHED

Symbol	Date	Examiner
A61F13/512;A61F13/5146 OR A61F13/53717 OR A61F13/53743 OR A61F2013/51355 OR A61F2013/53782 OR A61F13/494 OR A61F13/5116 OR A61F13/51305 OR A61F13/51401 OR A61F13/51478 OR A61F13/53		
A61F13/512 OR A61F13/5146 OR A61F13/53717 OR A61F13/53743 OR A61F2013/51355 OR A61F2013/53782 OR A61F13/494 OR A61F13/5116 OR A61F13/51305 OR A61F13/51401 OR A61F13/51478 OR A61F13/53	03/14/14	MK
UPDATED	07/07/14	MK
UPDATED	10/19/14	MK

CPC COMBINATION SETS - SEARCHED

Symbol	Date	Examiner

US CLASSIFICATION SEARCHED

Class	Subclass	Date	Examiner
604	367,378-384,385.01,385.101	03/14/14	MK
	UPDATED	07/07/14	MK
	UPDATED	10/19/14	MK

SEARCH NOTES

Search Notes	Date	Examiner
INVENTOR NAME SEARCH		
EAST TEXT SEARCH		
PLUS SEARCH	03/14/14	MK

INTERFERENCE SEARCH

US Class/ CPC Symbol	US Subclass / CPC Group	Date	Examiner

Index of Claims	Application/Control No.	Applicant(s)/Patent Under Reexamination
	14129401	ANDERSSON ET AL.
	Examiner	**Art Unit**
	MICHELE M KIDWELL	3761

✓	Rejected	-	Cancelled	N	Non-Elected	A	Appeal
=	Allowed	÷	Restricted	I	Interference	O	Objected

☐ Claims renumbered in the same order as presented by applicant ☐ CPA ☐ T.D. ☐ R.1.47

CLAIM		DATE								
Final	Original	03/17/2014	07/07/2014	10/19/2014						
	1	✓	✓	✓						
	2	✓	✓	✓						
	3	✓	✓	✓						
	4	✓	✓	✓						
	5	✓	✓	✓						
	6	✓	✓	✓						
	7	✓	✓	✓						
	8	✓	✓	✓						
	9	✓	✓	✓						
	10	✓	✓	✓						
	11	✓	✓	✓						
	12	✓	✓	✓						
	13	✓	✓	✓						
	14	✓	✓	✓						
	15	✓	✓	✓						
	16	✓	✓	✓						
	17	✓	✓	✓						
	18	✓	✓	-						
	19	✓	✓	✓						
	20	✓	✓	✓						
	21		✓	✓						
	22		✓	✓						
	23		✓	✓						
	24		✓	✓						

To: DBRIPDocket@dbr.com,penelope.mongelluzzo@dbr.com,
From: PAIR_eOfficeAction@uspto.gov
Cc: PAIR_eOfficeAction@uspto.gov
Subject: Private PAIR Correspondence Notification for Customer Number 105855

Oct 23, 2014 05:34:33 AM

Dear PAIR Customer:

Drinker Biddle & Reath LLP
1500 K Street NW, Suite 1100
Washington, DC 20005
UNITED STATES

The following USPTO patent application(s) associated with your Customer Number, 105855 , have new outgoing correspondence. This correspondence is now available for viewing in Private PAIR.

The official date of notification of the outgoing correspondence will be indicated on the form PTOL-90 accompanying the correspondence.

Disclaimer:
The list of documents shown below is provided as a courtesy and is not part of the official file wrapper. The content of the images shown in PAIR is the official record.

Application	Document	Mailroom Date	Attorney Docket No.
14129401	CTNF	10/23/2014	049121-0366-00-US-504907
	892	10/23/2014	049121-0366-00-US-504907

To view your correspondence online or update your email addresses, please visit us anytime at https://sportal.uspto.gov/secure/myportal/privatepair.

If you have any questions, please email the Electronic Business Center (EBC) at EBC@uspto.gov with 'e-Office Action' on the subject line or call 1-866-217-9197 during the following hours:

Monday - Friday 6:00 a.m. to 12:00 a.m.

Thank you for prompt attention to this notice,

UNITED STATES PATENT AND TRADEMARK OFFICE

PATENT APPLICATION INFORMATION RETRIEVAL SYSTEM

PTO/SB/08a (07-09)
Approved for use through 07/31/2012. OMB 0651-0031
U.S. Patent and Trademark Office; U.S. DEPARTMENT OF COMMERCE
Under the Paperwork Reduction Act of 1995, no persons are required to respond to a collection of information unless it contains a valid OMB control number.

Substitute for form 1449/PTO

INFORMATION DISCLOSURE STATEMENT BY APPLICANT

(Use as many sheets as necessary)

Sheet	1	of	2

Complete if Known	
Application Number	14/129,401
Filing Date	December 26, 2013
First Named Inventor	Patrik ANDERSSON
Art Unit	3761
Examiner Name	M. M. Kidwell
Attorney Docket Number	049121-0366-00-US-504907

U. S. PATENT DOCUMENTS

Examiner Initials*	Cite No.[1]	Document Number Number-Kind Code[2] *(if known)*	Publication Date MM-DD-YYYY	Name of Patentee or Applicant of Cited Document	Pages, Columns, Lines, Where Relevant Passages or Relevant Figures Appear
	A*	US-2004/0102124-A1	05-27-2004	Suzuki	

FOREIGN PATENT DOCUMENTS

Examiner Initials*	Cite No.[1]	Foreign Patent Document Country Code[3]-Number[4]-Kind Code[5] *(if known)*	Publication Date MM-DD-YYYY	Name of Patentee or Applicant of Cited Document	Pages, Columns, Lines, Where Relevant Passages Or Relevant Figures Appear	T[6]

Examiner Signature		Date Considered	

*EXAMINER: Initial if reference considered, whether or not citation is in conformance with MPEP 609. Draw line through citation if not in conformance and not considered. Include copy of this form with next communication to applicant. * CITE NO.: Those application(s) which are marked with an single asterisk (*) next to the Cite No. are not supplied (under 37 CFR 1.98(a)(2)(iii)) because that application was filed after June 30, 2003 or is available in the IFW. [1] Applicant's unique citation designation number (optional). [2] See Kinds Codes of USPTO Patent Documents at **www.uspto.gov** or MPEP 901.04. [3] Enter Office that issued the document, by the two-letter code (WIPO Standard ST.3). [4] For Japanese patent documents, the indication of the year of the reign of the Emperor must precede the serial number of the patent document. [5] Kind of document by the appropriate symbols as indicated on the document under WIPO Standard ST.16 if possible. [6] Applicant is to place a check mark here if English language Translation is attached.

PTO/SB/08b (07-09)
Approved for use through 07/31/2012. OMB 0651-0031
U.S. Patent and Trademark Office; U.S. DEPARTMENT OF COMMERCE
Under the Paperwork Reduction Act of 1995, no persons are required to respond to a collection of information unless it contains a valid OMB control number.

Substitute for form 1449/PTO

INFORMATION DISCLOSURE STATEMENT BY APPLICANT

(Use as many sheets as necessary)

Sheet	2	of	2

Complete if Known	
Application Number	14/129,401
Filing Date	December 26, 2013
First Named Inventor	Patrik ANDERSSON
Art Unit	3761
Examiner Name	M. M. Kidwell
Attorney Docket Number	049121-0366-00-US-504907

NON PATENT LITERATURE DOCUMENTS

Examiner Initials*	Cite No.[1]	Include name of the author (in CAPITAL LETTERS), title of the article (when appropriate), title of the item (book, magazine, journal, serial, symposium, catalog, etc.), date, page(s), volume-issue number(s), publisher, city and/or country where published.	T[2]
	A	Notification of First Office Action issued November 28, 2014 in Chinese Patent Application No. 201180071909.0 (7 pages) with English Translation (7 pages)	

Examiner Signature		Date Considered	

*EXAMINER: Initial if reference considered, whether or not citation is in conformance with MPEP 609. Draw line through citation if not in conformance and not considered. Include copy of this form with next communication to applicant.

[1] Applicant's unique citation designation number (optional). [2] Applicant is to place a check mark here if English language Translation is attached.

STATE INTELLECTUAL PROPERTY OFFICE (SIPO) OF THE PEOPLE'S REPUBLIC OF CHINA

Applicant:	**SCA HYGIENE PRODUCTS AB**	Date of Notification: **November 28, 2014**
Attorney:	**WANG QIONGXIAN**	
Application No.:	**201180071909.0**	
Title of the Invention:	**ABSORBENT ARTICLE HAVING INTAKE STRUCTURE**	

Notification of the First Office Action

(National Phase of PCT Application)

1. ☒ In response to the applicant's request, SIPO carried out substantial examination on the above-identified patent application for invention under Article 35.1 of the Patent Law of the People's Republic of China (hereinafter referred to as "the Patent Law").
   ☐ SIPO has decided to examine the application on its own initiative under Article 35.2 of the Patent Law.

2. ☐ The applicant claimed the following priority(ies):

3. ☐Amendments submitted on_____are unacceptable because they do not comply with Rule 51.1 of the Implementing Regulations of the Patent Law.

4. Examination as to substance was directed to:
   ☐ Chinese translation of originally filed PCT application.
   ☒ the documents as specified below:
   claims 1-21 according to the Annexes to IPRP; and
   the abstract and its figure, the description, paragraphs 1-116, and drawings of the description submitted on December 26, 2013.

5. ☒ Below is/are the reference document(s) cited in this Office Action (the sequence number(s) will be used throughout the examination procedure):

Seq. No.	Number(s) or Title(s) of Reference(s)	Date of Publication (or filing date of conflicting application)
1	US6241714B1	June 5, 2001
2	WO2005/084596A1	September 15, 2005

6. Conclusions:

☐ On the Specification:
- ☐ The subject matter contained in the application is not patentable under Article 5 of the Patent Law.
- ☐ The description does not comply with Article 26.3of the Patent Law.
- ☐ The description does not comply with Article 33 of the Patent Law.
- ☐ The description does not comply with Rule 17 of the Implementing Regulations.
- ☐ _____

☒ On the Claims:
- ☐ Claim(s) _____ does/do not comply with Article 2.2 of the Patent Law.
- ☐ Claim(s) _____ does/do not comply with Article 9.1 of the Patent Law.
- ☐ Claim(s) _____ does/do not possess the novelty stipulated by Article 22.2 of the Patent Law.
- ☒ Claims **1-21** do not possess the inventiveness stipulated by Article 22.3 of the Patent Law.

☐ Claim(s) _____ does/do not possess the practical applicability stipulated by Article 22.4 of the Patent Law..
☐ Claim(s) _____ is/are not patentable under Article 25 of the Patent Law.
☐ Claim(s)_____ does/do not comply with Article 26.4 of the Patent Law.
☐ Claim(s) _____ does/do not comply with Article 31.1 of the Patent Law.
☐ Claim(s) _____ does/do not comply with Article 33 of the Patent Law.
☐ Claim(s) _____ does/do not comply with Rule 19 of the Implementing Regulations.
☐ Claim(s) _____ does/do not comply with Rule 20 of the Implementing Regulations.
☐ Claim(s) _____ does/do not comply with Rule 21 of the Implementing Regulations.
☐ Claim(s) _____ does/do not comply with Rule 22 of the Implementing Regulations.
☐ _____

☐ The application does not comply with Article 26.5 of the Patent Law or Rule 26 of the Implementing Regulations.
☐ The application does not comply with Article 20.1 of the Patent Law.
☐ The divisional application does not comply with Rule 43.1 of the Implementing Regulations.

Please refer to the text portion for detailed analyses of the above conclusions.

7. In view of the conclusions set forth above, the Examiner is of the opinion that:
☐ The applicant should make amendments as directed in the text portion.
☐ The applicant should expound reasons why the application is patentable, and make amendments to overcome deficiencies pointed out in the text portion. Otherwise, the application will not be granted.
☒ The application does not contain substantial content that are patentable, and therefore, if the applicant fails to state sufficient reasons to prove that the application do have merits, it will be rejected.
☐

8. Remarks:
(1) Under Article 37 of the Patent Law, the applicant should file a response to the office action within **4** months upon receipt of the Notification. Failing to file a response in time, the application will be deemed as withdrawal.
(2) As stipulated by Article 33 of the Patent Law, any amendments to the application should not go beyond the scope described in original claims and specification.
As stipulated by Rule 51.3 of the Implementing Regulations, amendments should be made in accordance with the requirements of this Notification.
(3) The response to the Notification and/or revision of the application should be mailed to or handed over to the "Reception Division" of the Patent Office. Failing to do so, the documents will have no legal effect.
(4) Without an appointment, the applicant and/or his agent shall not interview with the Examiner in the Patent Office.

9. This Notification contains a text portion of **2** pages and the following attachments:
☐ ____ cited reference(s), totally ____ pages.
☐ _____

Examination Dept. _____ Examiner: _____ Seal of the Examination Department

The Text of the First Office Action

Application No.: 201180071909.0

The present application relates to an absorbent article. After examination, the opinions are provided as follows.

Claims 1 to 21 do not possess the inventiveness under Article 22.3 of the Patent Law.

1. Claim 1 intends to protect an absorbent article. Reference D1 (US6241714B1) discloses an absorbent article and a method for the directed drainage of fluids emerging in a localized manner, and especially discloses the following contents (*see the abstract, the description, lines 1-19 of column 7, and lines 19-50 of column 9, and Figs. 1-11*):

"An absorbent article 10 comprises: a front region 12; a rear region 14; a center part 16 disposed between the front and rear regions (*i.e., having side edges extending in the longitudinal direction and end edges extending in the transverse direction*); an upper, fluid-permeable layer 18 (*corresponding to the topsheet in claim 1*) which faces the body when the absorbent article 10 is in use; a lower layer 20 (*corresponding to the backsheet in claim 1*) which is impervious to fluid and is remote from the body when the absorbent article 10 is in use; a fluid-distribution layer 22 (*corresponding to the first absorbent layer in claim 1*) which is disposed between the fluid-permeable layer 18 and the layer 20 which is impervious to fluid, the fluid-distribution layer 22 extending from the front region 12 to the rear region 14 of the absorbent article 10; and a fluid-storage layer 24 disposed between the layer 20 which is impervious to fluid and the fluid-distribution layer 22.

The liquid distribution layer 22 has an undulated configuration defining longitudinal transport channels, the undulated configuration being disposed transversely in the absorbent article 10. The liquid distribution layer 22 has funnel-shaped openings 30 for transfer of liquid, the funnel-shaped openings tapering toward the fluid-storage layer. The fluid-storage layer 24 is made from a pulp material.

An additional passage 28 (*combination of the additional passage and the liquid storage layer corresponds to the fluid flow control structure in claim 1*) is arranged between the fluid-distribution layer and the fluid-storage layer. The additional passage 28 is manufactured from an UCTAD material (the UCTAD material contains at least 10 wt % of high-yield pulp fibers based on the weight of the dry substance, with a wet strength agent being added to it in such a quantity that the ratio of the wet tensile strength to the dry tensile strength amounts to approximately 0.1).

The uppermost layer 28a, to which the undulating strip of material is applied, is arranged without funnel-shaped openings. The layers 28b and 28c, which lie underneath, have funnel-shaped openings 30. Small absorptive feet 40 are located at the outlet of the funnel openings 30. The small absorptive feet 40 are each fastened to the strip of material that lies below them and, in this way, they assist the directed transport of liquid into the liquid storage layer 24".

Thus, claim 1 is merely distinguished from D1 in that: "the polymers in the first perforated polymeric layer are selected from polyolefins, polyesters, polyamides and blends and combinations thereof, the first perforated polymeric layer having a basis weight of from 50 g/m^2 to150 g/m^2". Based on these distinguishing features, the technical problem actually aimed to be solved by claim 1 to select a kind of material for manufacturing the first perforated polymeric layer. For a person skilled in the art, polyolefins, polyesters, polyamides and blends and combinations thereof all are the common materials for the absorbent article. Thus, selecting one from these materials as the polymers in the first perforated polymeric layer and setting a basis weight of the first perforated polymeric layer are the obvious solving modes for the skilled person. Thus, it is obvious to the skilled person that the technical solution defined in claim 1 can be arrived at over D1 in conjunction with the routine technical means in the art. Accordingly, claim 1 fails to have prominent substantive features and represent a notable progress, and does not involve an inventive step under Article 22.3 of the Patent Law.

2. With respect to dependent claims 2, 3, 6, 7 and 8, their additional technical features are the routine choices for the material and numerical values. Therefore, when the claim referred to is not inventive, dependent claims 2, 3, 6, 7 and 8 also do not involve an inventive step under Article 22.3 of the Patent Law.

3. With respect to dependent claims 4 and 5, their additional technical features are disclosed by D1 (see Figs. 3A, 3B). Therefore, when the claim referred to is not inventive, dependent claims 4 and 5 also do not involve an inventive step under Article 22.3 of the Patent Law.

4. With respect to dependent claims 9 and 10, Reference D2 (WO2005/084596A1) discloses an absorbent product, wherein the flat tissue ply 73 is surrounded by two plies 71, 72, thereby forming a three-layer structure; the two plies 71, 72 each have a plurality of guide protrusions 75; and the protrusions 75 of the two plies 71, 72 are out of register with each other (*see the abstract, the description, line 29 on page 1 to line 2 on page 2, lines 8-31 on page 14, and lines 4-12 on page 17, and Figs. 2-7*). Thus, it is obvious to the skilled person that the technical solutions defined in claims 9 and 10 can be arrived at over D1 in conjunction with D2 and the routine technical means in the art. Therefore, when the claim referred to is not inventive, dependent claims 9 and 10 also do not involve an inventive step under Article 22.3 of the Patent Law.

5. Dependent claims 11 to 18 define the material and structure of the second perforated polymeric layer. For the skilled person, the additional technical features of claims 11 to 18 are the obvious solving modes, in order to meet the actual requirement. Therefore, when the claim referred to is not inventive, dependent claims 11 to 18 also do not involve an inventive step under Article 22.3 of the Patent Law.

6. Dependent claims 19 to 21 define the properties of the absorbent article. For the

skilled person, the additional technical features of claims 19 to 21 are the obvious solving modes, in order to meet the actual requirement. Therefore, when the claim referred to is not inventive, dependent claims 19 to 21 also do not involve an inventive step under Article 22.3 of the Patent Law.

For the above reasons, the applicant shall make a response within the specified time limit and, when necessary, amend the application documents. Otherwise, it is hard for the present application to be granted a patent right. Please note that any amendment should not go beyond the scope of the disclosure contained in the initial application.

SEARCH REPORT

Patent Application No.: 201180071909.0	Application Date: 2011/06/28	First search
Applicant: SCA HYGIENE PRODUCTS AB	Earliest Priority Date:	
Number of Claims:21	Number of paragraphs of specification: 116+8	

Classification (IPC) determined by examiner: A61F13/537, A61F13/535, A61F13/539

Database and search information
Database: CNPAT, CNKI, WPI, EPODOC
Keywords: ABSORB, INCONTINENCE, PROTECT, FLOW, CONTROL, STRUCTURE, FIBER, POLYMERISE, LAYER. BASIS, WEIGHT, SET, PREDETERMINED, VALUE, ANDERSSON, BERGSTROEM, BERGSTROM, LUNDMAN, SCA

Relevant Patent Documents

Category	Documents No.	Publication Date	IPC	Relevant paragraphs and/or drawings	Claims No.
X	US6241714B1	20010605	A61F13/15	*the abstract, the description, lines 1-19 of column 7, and lines 19-50 of column 9, and Figs. 1-11*	1-8, 11-21
Y	US6241714B1	20010605	A61F13/15	*the abstract, the description, lines 1-19 of column 7, and lines 19-50 of column 9, and Figs. 1-11*	9, 10
Y	WO2005/084596A1	20050915	A61F13/15	*the abstract, the description, line 29 on page 1 to line 2 on page 2, lines 8-31 on page 14, and lines 4-12 on page 17, and Figs. 2-7*	9, 10
A	US2004/0102124A1	20040527	B32B3/26	the whole spec.	1-21
A	US2005/0267429A1	20051201	A61F13/15	the whole spec.	1-21

Relevant Non-Patent Documents

Category	Name of Book(version and volume)	Publication Date	Author and Publisher	Relevant Pages	Claims No.

Category	Name of Journal or Abstract (Edition and volume)	Publication Date	Author and Title of the Article	Relevant Pages	Claims No.

Notes:

1. **The class and/or subclass of IPC actually searched by examiners should be filled.**
2. **The name of journal or other regularly published publications may use abbreviations as generally recognized by international standards.**
3. **Categories of documents:**

   X: the document that when taken alone, prejudices the novelty or inventive step of the claim

   Y: the document that when combined with other such documents, prejudices the inventive step of claim

   A: the document defining the general state of the art

   R: the patent or patent application document belonging to identical invention-creation that was submitted to the Patent Office by any entity or individual on the date of filing

   P: the document published prior to the application date but later than the priority date

   E: conflicting application

中华人民共和国国家知识产权局

100140

北京市金融大街27号投资广场A座10层
永新专利商标代理有限公司
王琼先 王永建

发文日：

2014年11月28日

申请号或专利号：**201180071909.0**　　发文序号：**2014112500602560**

申请人或专利权人：SCA卫生用品公司

发明创造名称：具有引入结构的吸收性物品

第一次审查意见通知书

（进入国家阶段的PCT申请）

1. ☒应申请人提出的实质审查请求，根据专利法第35条第1款的规定，国家知识产权局对上述发明专利申请进行实质审查。
   ☐根据专利法第35条第2款的规定，国家知识产权局决定自行对上述发明专利申请进行实质审查。
2. ☐申请人要求以其在：

3. ☐经审查，申请人于_____提交的修改文件，不符合专利法实施细则第51条第1款的规定，不予接受。
4. ☐审查是针对原始提交的国际申请的中文文本或中文译文进行的。
   ☒审查是针对下列申请文件进行的：
   按国际初步审查报告的附件提交的，权利要求第1-21项；
   2013年12月26日提交的说明书第1-116段、说明书附图、说明书摘要、摘要附图。
5. ☒本通知书引用下列对比文献（其编号在今后的审查过程中继续沿用）

编号	文件号或名称	公开日期（或抵触申请的申请日）
1	US 6241714B1	20010605
2	WO 2005/084596A1	20050915

6. 审查的结论性意见：
   关于说明书：
   ☐申请的内容属于专利法第5条规定的不授予专利权的范围。
   ☐说明书不符合专利法第26条第3款的规定。
   ☐说明书不符合专利法第33条的规定。
   ☐说明书的撰写不符合专利法实施细则第17条的规定。
   ☐_____
   关于权利要求书：
   ☐权利要求_____不符合专利法第2条第2款的规定。
   ☐权利要求_____不符合专利法第9条第1款的规定。

☐权利要求_____不具备专利法第 22 条第 2 款规定的新颖性。
☒权利要求 1-21 不具备专利法第 22 条第 3 款规定的创造性。
☐权利要求_____不具备专利法第 22 条第 4 款规定的实用性。
☐权利要求_____属于专利法第 25 条规定的不授予专利权的范围。
☐权利要求_____不符合专利法第 26 条第 4 款的规定。
☐权利要求_____不符合专利法第 31 条第 1 款的规定。
☐权利要求_____不符合专利法第 33 条的规定。
☐权利要求_____不符合专利法实施细则第 19 条的规定。
☐权利要求_____不符合专利法实施细则第 20 条的规定。
☐权利要求_____不符合专利法实施细则第 21 条的规定。
☐权利要求_____不符合专利法实施细则第 22 条的规定。
☐_____

☐申请不符合专利法第 26 条第 5 款或者实施细则第 26 条的规定。
☐申请不符合专利法第 20 条第 1 款的规定。
☐分案申请不符合专利法实施细则第 43 条第 1 款的规定。

上述结论性意见的具体分析见本通知书的正文部分。

7. 基于上述结论性意见，审查员认为：

☐申请人应当按照通知书正文部分提出的要求，对申请文件进行修改。

☐申请人应当在意见陈述书中论述其专利申请可以被授予专利权的理由，并对通知书正文部分中指出的不符合规定之处进行修改，否则将不能授予专利权。

☒专利申请中没有可以被授予专利权的实质性内容，如果申请人没有陈述理由或者陈述理由不充分，其申请将被驳回。

☐_____

8. 申请人应注意下列事项：

（1）根据专利法第 37 条的规定，申请人应当在收到本通知书之日起的 4 个月内陈述意见，如果申请人无正当理由逾期不答复，其申请将被视为撤回。

（2）申请人对其申请的修改应当符合专利法第 33 条的规定，不得超出原说明书和权利要求书记载的范围，同时申请人对专利申请文件进行的修改应当符合专利法实施细则第 51 条第 3 款的规定，按照本通知书的要求进行修改。

（3）申请人的意见陈述书和／或修改文本应当邮寄或递交国家知识产权局专利局受理处，凡未邮寄或递交给受理处的文件不具备法律效力。

（4）未经预约，申请人和／或代理人不得前来国家知识产权局与审查员举行会晤。

9. 本通知书正文部分共有 2 页，并附有下列附件：

☐引用的对比文件的复印件共_____份_____页。

☐_____

审查员：方炜园　　联系电话：01082245083　　审查部门：专利审查协作北京中心光电技术发明审查部

第一次审查意见通知书

（进入国家阶段的 PCT 申请）

申请号:2011800719090

本申请涉及一种吸收性物品，经审查，现提出如下审查意见。

权利要求 1-21 不具备专利法第二十二条第三款规定的创造性。

1.权利要求 1 请求保护一种吸收性物品，对比文件 1（US6241714B1）公开了一种吸收性物品以及定向导出局部排出的流体的方法，并披露了如下技术特征（参见说明书摘要，说明书第 7 栏 1-19 行，第 9 栏 19-50 行，图 1-11）：一种吸收性制品(10)，它包含前段(12)，后段(14)及位于前后段之间的中间部分(16)（即具有沿纵向延伸的侧缘和沿横向延伸的端缘）；在使用吸收性制品(10)时，贴近身体的液体可渗透的上盖面层(18)（相当于本申请的顶层）；在使用吸收性制品(10)时，背向身体的液体不可渗透的下盖面层(20)（相当于本申请的底层）；置于液体可渗透层(18)与液体不可渗透层(20)之间的液体分配层(22)（相当于本申请的第一吸收层），液体分配层(22)在吸收性制品(10)的横向呈伸展波纹形，以形成纵向的输送通道，液体分配层(22)包含作为传送流体的漏斗形孔(30)，漏斗形孔的锥尖朝向液体贮存层它延伸到吸收性制品(10)的前段(12)及后段(14)；置于在液体不可渗透层(20)与液体分配层(22)之间的液体贮存层(24)，贮存层 24 由浆粕材料构成，在液体分配层和液体贮存层之间还有附加通道 28（其与液体贮存层的接合相当于本申请的流体控制结构），附加通道 28 用 UCTAD 一材料（材料包含至少按干物料计算为 10%(重量)的高柔 性浆粕纤维(high yield pulp filers)，还加入一定量的耐湿剂，足以使 物料的湿抗断强度对干抗断强度之比约为 0.1）制成，最上一层 28a 的上方是波纹形通道，没有漏斗形孔。下面两层 28b 及 28c 都有漏斗形孔 30，在漏斗形孔 30 出口端的小吸足 40，每一小吸足 均伸入下面通道中，以协助将液体定向转移到流体贮存层 24。权利要求 1 要求保护的技术方案与对比文件 1 中公开的内容相比，区别技术特征为：第一穿孔聚合层（32）中的聚合物选自聚烯烃、聚酯、聚酰胺或它们的混合和组合，所述第一穿孔聚合层（32）具有 50g/m2-150g/m2 的基重。基于该区别特征，本申请实际解决的技术问题是：采用何种材料制成第一穿孔聚合层。对本领域技术人员而言，聚烯烃、聚酯、聚酰胺或它们的混合和组合均为本领域中惯用的吸收制品材料，因此，选择这些材料作为第一穿孔聚合层、以及设置其基重，是本领域技术人员容易想到的解决方式，因此，结合对比文件 1 和本领域中的惯用手段，得到权利要求 1 要求保护的技术方案，本领域技术人员是显而易见的，因此，权利要求 1 不具备突出的实质性特点和显著的进步，不具备专利法第二十二条第三款规定的创造性。

2.权利要求 2-3，6-8 的附加技术特征均为本领域中惯用的材料和数值的选择，因此，在其引用的权利要求不具备创造性的情况下，权利要求 2-3，6-8 不具备创造性。

3.权利要求 4,5 的附加技术特征已被对比文件 1 所披露（参见图 3A,3B），因此，在其引用的权利要求不具备创造性的情况下，权利要求 4,5 不具备创造性。

4.权利要求 9-10 对流体流量控制结构进行了限定，对比文件 2（WO2005/084596A1）公开了一种吸收制品，并披露了如下技术特征（参见说明书摘要，第 1 页第 29 行至第 2 页第 2 行，第 14 页第 8-31 行，17 页第 4-12 行，图 2-7）：平纸板 73 被两个板层 71,72 包围，即形成了三层结构，其中两个板层 71,72 分别具有多个引流的突出部 75，且，两个板层的突出部 75 彼此不对齐，因此，接合对比文件 1 和对比文件 2 以及本领域的惯用手段，得到权利要求 9-10 要求保护的技术方案，对本领域技术人员而言是显而易见的，因此，在其引用的权利要求不具备创造性的情况下，权利要求 9-10 不具备创造性。

5.权利要求 11-18 对第二穿孔聚合层的材料和结构等进行了限定，对本领域技术人员而言，其附加技术特征均为本领域技术人员为了实现需求能够想到的解决方式，因此，在其引用的权利要求不具备创造性的情况下，权利要求 11-18 不具备创造性。

6.权利要求 19-21 对吸收性物品的特性进行了限定，对本领域技术人员而言，其附加技术特征均为本领域技术人员为了实现需求能够想到的解决方式，因此，在其引用的权利要求不具备创造性的情况下，权利要求 19-21 不具备创造性。

申请人应当在本通知书指定的答复期限内对本通知书提出的问题逐一进行答复，必要时应修改专利申请文件,否则本申请将难以获得批准。申请人对申请文件的修改应当符合专利法第三十三条的规定，不得超出原说明书和权利要求书记载的范围。

审查员姓名:方炜园
审查员代码:248995

检索报告

申请号：2011800719090	申请日：20110628	首次检索
申请人：SCA 卫生用品公司	最早的优先权日：	
权利要求项数：21	说明书段数：116+8	
审查员确定的 IPC 分类号：A61F 13/537,A61F 13/535,A61F 13/539		
检索记录信息：审查员实际检索的 IPC 分类号：A61F 13/537; A61F 13/535;A61F 13/539 数据库：CNPAT, CNKI, WPI, EPODOC 关键字：ABSORB;INCONTINENCE;PROTECT;FLUID;FLOW;CONTROL;STRUCTURE;FIBRE POLYMERISE;LAYER;BASIS;WEIGHT;SET;PREDETERMINED;VALUE; P？安德松;P？伯格斯特龙;M？伦德曼; ＳＣＡ卫生用品公司; 不可渗透;吸收性;吸收芯;吸收层;流体流;聚合层;顶层;底层;延伸;流量;纤维; ANDERSSON P; BERGSTROEM P; BERGSTROM P; LUNDMAN M; (SCAD) SCA HYGIENE PROD AB		

相关专利文献

类型	国别以及代码[11]给出的文献号	代码[43]或[45]给出的日期	IPC 分类号	相关的段落和／或图号	涉及的权利要求
X	US6241714B1	20010605	A61F13/15	说明书摘要，说明书第 7 栏 1-19 行，第 9 栏 19-50 行，图 1-11	1-8,11-21
Y	US6241714B1	20010605	A61F13/15	说明书摘要，说明书第 7 栏 1-19 行，第 9 栏 19-50 行，图 1-11	9-10

Y	WO2005/084596A1	20050915	A61F13/15	说明书摘要，第 1 页第 29 行至第 2 页第 2 行，第 14 页第 8-31 行，17 页第 4-12 行，图 2-7	9-10
A	US2004/0102124A1	20040527	B32B3/26	全文	1-21
A	US2005/0267429A1	20051201	A61F13/15	全文	1-21

相关非专利文献					
类型	书名(包括版本号和卷号)	出版日期	作者姓名和出版者名称	相关页数	涉及的权利要求
类型	期刊或文摘名称 (包括卷号和期号)	发行日期	作者姓名和文章标题	相关页数	涉及的权利要求

表格填写说明事项：

1. 审查员实际检索领域的 IPC 分类号应当填写到大组和 / 或小组所在的分类位置。
2. 期刊或其它定期出版物的名称可以使用符合一般公认的国际惯例的缩写名称。
3. 相关文件的类型说明：

   X：一篇文件影响新颖性或创造性；

   Y：与本报告中的另外的 Y 类文件组合而影响创造性；

   A：背景技术文件；

   R：任何单位或个人在申请日向专利局提交的、属于同样的发明创造的专利或专利申请文件。

   P：中间文件，其公开日在申请的申请日与所要求的优先权日之间的文件；

   E：抵触申请。

审 查 员：方炜园　　审查部门：专利审查协作北京中心光电技术发明审查部

2014 年 11 月 20 日

Electronic Acknowledgement Receipt

EFS ID:	21288525
Application Number:	14129401
International Application Number:	
Confirmation Number:	4049
Title of Invention:	ABSORBENT ARTICLE HAVING INTAKE STRUCTURE
First Named Inventor/Applicant Name:	Patrik Andersson
Customer Number:	105855
Filer:	Nikolaus P. Schibli/Felicia Bull
Filer Authorized By:	Nikolaus P. Schibli
Attorney Docket Number:	049121-0366-00-US-504907
Receipt Date:	23-JAN-2015
Filing Date:	26-DEC-2013
Time Stamp:	11:10:07
Application Type:	U.S. National Stage under 35 USC 371

Payment information:

Submitted with Payment	no

File Listing:

Document Number	Document Description	File Name	File Size(Bytes)/ Message Digest	Multi Part /.zip	Pages (if appl.)
1		49121-0366-IDS.pdf	253172 2e6e398410ddd64e172c79f64e09f1a1b29a2cb9	yes	5

	Multipart Description/PDF files in .zip description		
	Document Description	**Start**	**End**
	Transmittal Letter	1	3
	Information Disclosure Statement (IDS) Form (SB08)	4	5

Warnings:

Information:

2	Other Reference-Patent/App/Search documents	49121-0366-CNOA.pdf	675022 02f7aec4bca121f1a470395a7715febded8064d8	no	14

Warnings:

Information:

Total Files Size (in bytes):	928194

This Acknowledgement Receipt evidences receipt on the noted date by the USPTO of the indicated documents, characterized by the applicant, and including page counts, where applicable. It serves as evidence of receipt similar to a Post Card, as described in MPEP 503.

New Applications Under 35 U.S.C. 111
If a new application is being filed and the application includes the necessary components for a filing date (see 37 CFR 1.53(b)-(d) and MPEP 506), a Filing Receipt (37 CFR 1.54) will be issued in due course and the date shown on this Acknowledgement Receipt will establish the filing date of the application.

National Stage of an International Application under 35 U.S.C. 371
If a timely submission to enter the national stage of an international application is compliant with the conditions of 35 U.S.C. 371 and other applicable requirements a Form PCT/DO/EO/903 indicating acceptance of the application as a national stage submission under 35 U.S.C. 371 will be issued in addition to the Filing Receipt, in due course.

New International Application Filed with the USPTO as a Receiving Office
If a new international application is being filed and the international application includes the necessary components for an international filing date (see PCT Article 11 and MPEP 1810), a Notification of the International Application Number and of the International Filing Date (Form PCT/RO/105) will be issued in due course, subject to prescriptions concerning national security, and the date shown on this Acknowledgement Receipt will establish the international filing date of the application.

IN THE UNITED STATES PATENT AND TRADEMARK OFFICE

In re Patent Application of:
Patrik ANDERSSON et al.

Application No.: 14/129,401 | Confirmation No.: 4049

Filed: December 26, 2013 | Art Unit: 3761

For: ABSORBENT ARTICLE HAVING INTAKE STRUCTURE | Examiner: M. M. Kidwell

INFORMATION DISCLOSURE STATEMENT (IDS)

MS Amendment
Commissioner for Patents
P.O. Box 1450
Alexandria, VA 22313-1450

Madam:

☐ **Under 37 C.F.R. § 1.97(b):** Pursuant to 37 C.F.R. §§ 1.56 and 1.97(b), Applicant brings to the attention of the Examiner the documents listed on the attached PTO/SB/08 Form. To the undersigned's knowledge, this IDS is being filed before the mailing date of a first Office Action on the merits, before the mailing date of a first Office Action on the merits after filing an RCE under § 1.114, or within three months of the application filing date.

☒ **Under 37 C.F.R. § 1.97(c):** Pursuant to 37 C.F.R. §§ 1.56 and 1.97(c), Applicant brings to the attention of the Examiner the documents listed on the attached PTO/SB/08 Form. This IDS is being filed after the events recited in § 1.97(b) but, to the undersigned's knowledge, before the mailing date of a Final Office Action, a Notice of Allowance, or another action that closes prosecution in the application.

☐ The fee of $180.00 set forth in § 1.17(p) is included herein;

☒ Applicant submits that each item of information contained in this IDS was

first cited in any communication from a foreign patent office in a counterpart foreign application not more than three months prior to the filing of this IDS. 37 C.F.R. § 1.97(e)(1).

☐ Applicant submits that no item of information contained in this IDS was cited in a communication from a foreign patent office in a counterpart foreign application, and, to the knowledge of the person signing the certification after making reasonable inquiry, no item of information contained in this IDS was known to any individual designated in § 1.56(c) more than three months prior to the filing of this IDS. 37 C.F.R. § 1.97(e)(2).

☐ **Under 37 C.F.R. § 1.97(d):** Pursuant to 37 C.F.R. §§ 1.56 and 1.97(d), Applicant brings to the attention of the Examiner the documents listed on the attached PTO/SB/08 Form. This IDS is being filed after the events recited in § 1.97(c) but before payment of the issue fee.

☐ The fee of $180.00 set forth in § 1.17(p) is included herein; and

☐ Applicant submits that each item of information contained in this IDS was first cited in any communication from a foreign patent office in a counterpart foreign application not more than three months prior to the filing of this IDS.

☐ Applicant submits that no item of information contained in this IDS was cited in a communication from a foreign patent office in a counterpart foreign application, and, to the knowledge of the person signing the certification after making reasonable inquiry, no item of information contained in this IDS was known to any individual designated in § 1.56(c) more than three months prior to the filing of this IDS. 37 C.F.R. § 1.97(e)(2).

☐ **Under 37 C.F.R. § 1.97(i):** Pursuant to 37 C.F.R. §§ 1.56 and 1.97(i), Applicant brings to the attention of the Examiner the documents listed on the attached PTO/SB/08 Form. This IDS is being filed after the events recited in § 1.97(d). Applicant requests that the IDS be placed in the file.

[x] A search report or other listing of documents from a counterpart Chinese Patent Application with the Serial No. 201180071909.0, dated November 28, 2014, and having documents cited thereon is attached for the Examiner's consideration. Any of these documents not previously cited, and any additional documents are listed on the PTO/SB/08 Form.

[x] Applicant respectfully requests that the Examiner consider the listed documents

and evidence that consideration by making appropriate notations on the attached form. As for any document listed on the accompanying PTO/SB/08 Form that is in a language other than English, relevance can be understood from an enclosed English abstract or at least partial translation or from mention in the specification or in a search report for a corresponding application.

This submission does not represent that a search has been made or that no better art exists and does not constitute an admission that any of the listed documents are material or constitute "prior art." If it should be determined that any of the listed documents do not constitute "prior art" under United States law, Applicant reserves the right to present to the Office the relevant facts and law regarding the appropriate status of such documents.

Applicant further reserves the right to take appropriate action to establish the patentability of the disclosed invention over the listed documents, should any of the documents be applied against the claims of the present application.

Except for issue fees payable under 37 C.F.R. § 1.18, the Commissioner is hereby authorized by this paper to charge any additional fees during the entire pendency of this Application, including fees due under 37 C.F.R. § 1.16 and 1.17 which may be required and including any required extension of time fees, or credit any overpayment to Deposit Account No. 50-0573. This paragraph is intended to be a CONSTRUCTIVE PETITION FOR EXTENSION OF TIME in accordance with 37 C.F.R. § 1.136(a)(3).

Respectfully submitted,

DRINKER BIDDLE & REATH LLP

N. Schibli

Nikolaus P. Schibli, Ph.D.
Registration No.: 56,994
DATED: January 23, 2015

CUSTOMER NO. 105855

DRINKER BIDDLE & REATH LLP
1500 K Street, N.W.
Suite 1100
Washington, DC 20005-1209
Tel: 202.842.8800
Fax: 202.842.8465

78531612. 1

Docket No.: 049121-0366-00-US (504907)
(PATENT)

IN THE UNITED STATES PATENT AND TRADEMARK OFFICE

In re Application of: Patrik ANDERSSON et al.	)	Confirmation No.: 4049
U.S. Application No.: 14/129,401	)	Group Art Unit: 3761
Filed: December 26, 2013	)	Examiner: Michele M. Kidwell
For: ABSORBENT ARTICLE HAVING INTAKE STRUCTURE	)	

Commissioner for Patents
U.S. Patent and Trademark Office
Customer Window, Mail Stop Amendment
Alexandria, VA 22313-1450

AMENDMENT UNDER 37 C.F.R. § 1.111

Dear Madam:

In response to the final Office Action dated October 23, 2014, a response date to which runs through February 23, 2015, by virtue of the Petition for a One-Month Extension of Time submitted herewith and payment of the corresponding fee, please amend the above-identified U.S. patent application as follows before examination on the merits:

Amendments to the Claims are reflected in the listing of claims that begin on page 2 of this paper; and

Remarks begin on page 7 of this paper.

AMENDMENTS TO THE CLAIMS

Please amend the claims as follows. This listing of claims will replace all prior versions, and listings, of claims in the application:

Listing of Claims:

Claim 1 (Currently Amended): An absorbent article having a longitudinal direction and a transverse direction, side edges extending in the longitudinal direction and end edges extending in the transverse direction and comprising:

a fluid permeable topsheet,

a fluid impermeable backsheet, and

an absorbent core enclosed between said topsheet and said backsheet, said absorbent core comprising,

a first absorbent layer having an opening extending therethrough,

a fluid flow control structure, and

a second absorbent layer arranged between the fluid flow control structure and the fluid impermeable backsheet,

wherein the fluid flow control structure is arranged between said first absorbent layer and said backsheet, said fluid flow control structure being a layered structure comprising a non-perforated fibrous polymeric layer and a first perforated polymeric layer, <u>and</u>

wherein <u>the opening extends along a longitudinal center line of the absorbent article, and the fluid permeable top sheet is in contact with the fluid flow control structure via the opening</u>

~~the polymers in the first perforated polymeric layer are selected from polyolefins, polyesters, polyamides and blends and combinations thereof, the first perforated polymeric layer having a basis weight of from 50 g/m^2 to 150 g/m^2~~.

Claim 2 (Previously Presented): The absorbent article according to claim 1, wherein the first perforated polymeric layer has a basis weight of from 60 g/m^2 to 100 g/m^2.

Claim 3 (Previously Presented): The absorbent article according to claim 1, wherein the first perforated polymeric layer is a nonwoven, a film or a film/nonwoven laminate.

Claim 4 (Previously Presented): The absorbent article according to claim 1, wherein the first perforated polymeric layer is a three-dimensionally formed layer having penetrating apertures extending from a first surface of the first perforated polymeric layer towards a second surface of the first perforated polymeric layer and forming protrusions on said second surface.

Claim 5 (Previously Presented): The absorbent article according to claim 4, wherein the first perforated polymeric layer is arranged with said second surface facing the non-perforated fibrous polymeric layer.

Claim 6 (Previously Presented): The absorbent article according to claim 4, wherein the first perforated polymeric layer is arranged with said second surface facing away from the non-perforated fibrous polymeric layer.

Claim 7 (Previously Presented): The absorbent article according to claim 4, wherein the average size of the apertures in the first perforated polymeric layer is 0.5 - 5 mm.

Claim 8 (Previously Presented): The absorbent article according to claim 1, wherein

open areas of the first perforated polymeric layer comprise 5-30% of the first perforated polymeric layer.

Claim 9 (Previously Presented): The absorbent article according to claim 1, wherein said fluid flow control structure is a three-layer structure consisting of the non-perforated fibrous polymeric layer, the first perforated polymeric layer and a second perforated polymeric layer, the non-perforated fibrous polymeric layer being sandwiched between the first perforated polymeric layer and the second perforated polymeric layer.

Claim 10 (Previously Presented): The absorbent article according to claim 9, wherein apertures in the first perforated polymeric layer and the second perforated polymeric layer are out of register with each other.

Claim 11 (Previously Presented): The absorbent article according to claim 9, wherein the second perforated polymeric layer has a basis weight of from 50 g/m^2 to 150 g/m^2.

Claim 12 (Previously Presented): The absorbent article according to claim 9, wherein the second perforated polymeric layer is a three-dimensionally formed layer having apertures extending from a first surface of the second perforated polymeric layer towards a second surface of the second perforated polymeric layer and forming protrusions on said second surface of the second perforated polymeric layer.

Claim 13 (Previously Presented): The absorbent article according to claim 12, wherein

the second perforated polymeric layer is arranged with said second surface of the second perforated polymeric layer facing the non-perforated fibrous polymeric layer.

Claim 14 (Previously Presented): The absorbent article according to claim 12, wherein the second perforated polymeric layer is arranged with said second surface of the second perforated polymeric layer facing away from the non-perforated fibrous polymeric layer.

Claim 15 (Previously Presented): The absorbent article according to claim 12, wherein the average size of the apertures in the second perforated polymeric layer is 0.5 - 5 mm.

Claim 16 (Previously Presented): The absorbent article according to claim 9, wherein open areas of the second perforated polymeric layer comprise 5-30% of the second perforated polymeric layer.

Claim 17 (Previously Presented): The absorbent article according to claim 9, wherein the second perforated polymeric layer is a nonwoven, a film or a film/nonwoven laminate.

Claim 18 (Cancelled).

Claim 19 (Previously Presented): The absorbent article according to claim 1, wherein the thickness of said fluid flow control structure at 5 kPa is 60-80% of the thickness at 0.5 kPa at a first, second and third compression performed according to the compression test disclosed herein.

Claim 20 (Previously Presented): The absorbent article according to claim 1, wherein the bending stiffness of the layered structure in said fluid flow control structure is 0.5 - 5 N as measured by the modified ASTM D 4032-82 CIRCULAR BEND PROCEDURE.

Claim 21 (Previously Presented): The absorbent article according to claim 1, wherein the basis weight of the non-perforated fibrous polymeric layer is from 20-120 gsm.

Claim 22 (Cancelled).

Claim 23 (Previously Presented). The absorbent article according to claim 1, wherein the opening extends through an entire crotch portion of the absorbent article.

Claim 24 (Previously Presented): The absorbent article according to claim 1, wherein the fluid permeable topsheet is not perforated.

Claim 25 (New): The absorbent article according to claim 1, wherein the polymers in the first perforated polymeric layer are selected from polyolefins, polyesters, polyamides and blends and combinations thereof, and the first perforated polymeric layer has a basis weight from 50 g/m^2 to 150 g/m^2.

Claim 26 (New): The absorbent article according to claim 1, wherein the fluid permeable top sheet is in contact with the first absorbent layer of the absorbent core at an area other than where the opening is located.

Claim 27 (New): The absorbent article according to claim 1, wherein the fluid permeable top sheet is in contact with the fluid flow control structure via the opening, such that a cavity is formed along the longitudinal center line of the absorbent article.

REMARKS

Entry of the foregoing amendments and reconsideration of the subject application are respectfully requested in light of the comments which follow.

Summary of the Office Action

In the October 23, 2014 non-final Office Action, Claims 1-3, 21 and 24 were rejected under 35 U.S.C. § 102(b) as allegedly being anticipated by Chen et al. (U.S. Pat. No. 6,492,574, hereinafter "Chen");

Claims 4-8 and 12-16 were rejected under 35 U.S.C. § 103(a) as allegedly being unpatentable over Chen and further in view of Gilman et al. (U.S. Pat. No. 5,437,653, hereinafter "Gilman"); and

Claims 9-11, 17, 19- 20 and 22-23 were rejected under 35 U.S.C. § 103(a) as allegedly being unpatentable over Chen.

Summary of the Response to Office Action

In the present Application, Claims 1-17, 19-21, and 23-27 are currently pending, with Claim 18 being cancelled by a previous amendment.

The present Amendment amends independent Claim 1 and adds new dependent Claims 25-27 without introducing any new matter, and cancels dependent Claim 22 without prejudice or disclaimer.

New dependent Claims 25-27 find non-limiting support in Applicants' disclosure as originally filed, for example in the specification at page 2, paragraph [0010], page 18 paragraph [0094]-[0095], and in Figures 1-2.

The rejections of the claims under 35 U.S.C. §§ 102(b) and 103(a) are respectfully traversed, to the extent that these rejections are still applicable to the claims.

Rejection under 35 U.S.C. §§ 102(b) and 103(a)

In response to the rejection of the claims under 35 U.S.C. § 103(a), Applicants respectfully traverse the rejection, and request reconsideration thereof, to the extent that the rejections are still applicable to the claims, as next discussed.

Briefly summarizing, Applicants' independent Claim 1 is directed to an absorbent article having a longitudinal direction and a transverse direction, side edges extending in the longitudinal direction and end edges extending in the transverse direction. The absorbent article includes a fluid permeable topsheet, a fluid impermeable backsheet, and an absorbent core enclosed between the topsheet and the backsheet.

Moreover, the absorbent core includes a first absorbent layer having an opening extending therethrough, a fluid flow control structure, and a second absorbent layer is arranged between the fluid flow control structure and the fluid impermeable backsheet. In addition, the fluid flow control structure is arranged between the first absorbent layer and the backsheet, the fluid flow control structure being a layered structure including a non-perforated fibrous polymeric layer and a first perforated polymeric layer wherein the opening extends along a longitudinal center line of the absorbent article, and the fluid permeable top sheet is in contact with the fluid flow control structure via the opening.

In rejecting the features of Applicants' dependent Claim 22, these features now incorporated into independent Claim 1, the pending Office Action stated that these features would have been obvious to one of ordinary skill in the art. Office Action, p. 7, ll. 16-20. In

forming this rejection, the Office Action provided the following reasoning:

> The difference between Chen and claims 22 – 23 is the provision that the opening extends along specific portions of the article.
>
> It would have been obvious . . . to vary the location of the opening as desired because the arrangement and/or size of the element already disclosed by the prior art is within the level of ordinary skill in the art.

P. 7, ll. 16-20. Applicants respectfully traverse this statement, as independent Claim 1 now requires that (i) the opening extends along a longitudinal center line of the absorbent article, and (ii) the fluid permeable top sheet is in contact with the fluid flow control structure via the opening. It is believed that this feature, in combination with the other features of Applicants' Claim 1, are not obvious in light of Chen, as next discussed.

The applied reference Chen is directed to an absorbent article 10 having an absorbent core 16 with a central absorbent member 18, an outer absorbent member 22, the central absorbent member 18 surrounded by outer absorbent member 22, and a central rising member 30 for urging the central absorbent member 18 toward the body of the user when the absorbent article 10 is compressed laterally inward by the legs of the user. Abst., Figs. 1-2, 8, 17, col. 12, ll. 10-28, col. 14, ll. 20-25. With respect to Figure 4, Chen explains that the central absorbent member 18 can be split into an upper absorbent layer 50 and a lower absorbent member 52 that replaces the central rising member 30, and that the upper absorbent layer 50 can have a shaping line 54 to promote upward deflection of the central portion of the central absorbent member 18. Col. 19: 64 – col. 20: 7, col. 19, ll. 1-8, Figs. 2-4.

The upward deflection of Chen's absorbent article 10 is the main feature of his disclosure, and is also shown in Figure 6, where the two left and right sections of the central absorbent member 18 form an inverted V-shape and are separated from each other at 54', and a

void space 72 is formed. Col. 21: ll. 9-17, Fig. 6. Shaping line 54 that is formed between two sections of central absorbent member 18 is also shown in Figures 9-10 and 16. As explained in Chen, the arrangement of central absorbent member 18 with shaping line 54, outer absorbent member 22, and central rising member 30 is to provide for an absorbent article 10 that bends or deflects upwards when contracted laterally by a user. Col. 1: 35-37, Fig. 6, see e.g. sequence of Figs. 7A-7F.

Moreover, Chen also explains that central rising member 30 can be made of one or more layers of material that can form an inverted V-shape, for example by an absorbent material having a central upward fold that serves as a hinge 94, and two downward creases 11. Col. 25: 65 – col. 26: 11, Fig. 18A. In another variant, central rising member 30 is made of a resilient web 118 having ends 114', 114" that are anchored to an underlying web 120 by bond areas 393', 393". Fig. 18B, col. 26: 12-34. Regardless of its structural embodiment, Chen discusses the following requirements for the central rising member 30:

> The central rising member generally has flexure points or folded sections such as an "e"-folded web (as shown in FIG. 5, for example) such that lateral compression from the longitudinal sides of the central rising member causes at least a portion of the central rising member to deflect upwards with sufficient force that an overlying central absorbent member can be deflected toward the body (or that the central rising member itself can rise toward the body when it serves as the central absorbent member). An absorbent central rising member can also be configured as a flattened tube, as shown in FIG. 11, or an equivalent. Other shapes can also be effective, such as a layer of absorbent material folded or held in the shape of the letter "C" rotated 90 degrees to the right, similar to an inverted "U" with the ends brought together.

Col. 27: 46-60. However, Applicants respectfully submit that Chen fails to teach or render obvious all the features of Applicants' independent Claim 1. In particular, Chen fails to teach or render obvious an absorbent article in which (i) an opening is formed in the first absorbent layer

and extends along a longitudinal center line of the absorbent article, and (ii) the fluid permeable top sheet is in contact with the fluid flow control structure via the opening, as recited together with other features of Applicants' Claim 1. Assuming strictly *arguendo* that Chen's central rising member 30 can be equated with fluid flow control structure of Applicants' Claim 1, Chen fails to teach or render obvious that the fluid permeable top sheet is in contact with the fluid flow control structure via the opening, as recited by Applicants' Claim 1. As shown in all of Chen's Figures 1, 2-4, 6, 8-10, 16, 19A-19B, Chen's topsheet 12 does not contact the central rising member 30 at a longitudinal center line of the absorbent article.

Moreover, this feature cannot be considered obvious in light of Chen. First, assuming strictly *arguendo* that Chen's topsheet 12 would be in contact with the central rising member 30 at a longitudinal center line of the absorbent article, such arrangement would prevent the central rising member 30 from performing its intended purpose, i.e. as explained above "that lateral compression from the longitudinal sides of the central rising member causes at least a portion of the central rising member to deflect upwards with sufficient force that an overlying central absorbent member can be deflected toward the body." This feature is the central aspect of Chen's disclosure. It is established U.S. patent law that if a proposed modification to the claims would change the principle of operation of the prior art invention being modified, then the teachings of the references are not sufficient to render the claims *prima facie* obvious. *In re Ratti,* 270 F.2d 810, 813, 123 USPQ 349, 352 (CCPA 1959). See e.g. M.P.E.P. § 2143.01 – VI.

Second, as explained in Applicants' specification with non-limiting embodiments, opening 25 is provided to form a cavity 26, and the topsheet 2 is shown to extend down into the cavity 26, such that "any body fluid that is released to the incontinence protector 1 will directly be collected in the cavity 26 and temporarily contained therein until it is distributed further into

and throughout the absorbent core." Spec., p. 18, ll. 23-29, Figs. 1-2. Therefore, Applicants' disclosure explains that the provision of opening 25 and cavity 26 is desired, and serve as a temporary reservoir for storing bodily fluid, upon egression of these fluids, so that these fluids can later be absorbed by the absorbent article.

In contrast thereto, Chen discussed an absorbent article 10 that provides for improved body fit and leakage control, with "an element which deflects upwards when laterally compressed from the side." In this respect, Chen is concerned with the opposite of what Applicants' Claim 1 is attempting to achieve, namely that the absorbent article 10 becomes inverse v-like shaped upon usage by the wearer, when in contrast, the absorbent article of Applicants' Claim 1 includes an opening along a longitudinal center line.

Accordingly, in light of the above discussion, Applicants respectfully submit that the features of Applicants' Claim 1 are not anticipated and also cannot be considered obvious in light of Chen. Also, dependent Claims 2-17, 19-21, and 23-27 depend from Claim 1 and recite the same combination of allowable features recited in Claim 1 as well as additional features that define over the applied art. Accordingly, Applicants respectfully request that the rejections of Claims 1-17, 19-21, and 22-27, be withdrawn, and the claims allowed.

CONCLUSIONS

In view of the foregoing discussion, Applicants respectfully request the entry of the amendments to place the application in clear condition for allowance or, in the alternative, in better form for appeal. Should the Examiner feel that there are any issues outstanding after consideration of this response; the Examiner is invited to contact Applicants' undersigned representative to expedite prosecution. A favorable action is awaited.

EXCEPT for issue fees payable under 37 C.F.R. § 1.18, the Commissioner is hereby authorized by this paper to charge any additional fees during the entire pendency of this application including fees due under 37 C.F.R. § 1.16 and 1.17 which may be required, including any required extension of time fees, or credit any overpayment to Deposit Account No. 50-0573. This paragraph is intended to be a **CONSTRUCTIVE PETITION FOR EXTENSION OF TIME** in accordance with 37 C.F.R. § 1.136(a)(3).

Respectfully submitted,

DRINKER BIDDLE & REATH LLP

Dated: February 6, 2015

By: N. Schibli

Nikolaus P. Schibli, Ph.D.
Reg. No. 56,994

Customer No. 105855
Drinker Biddle & Reath LLP
1500 K Street, N.W., Suite 1100
Washington, DC 20005-1209
Tel.: (202) 842-8800
Fax: (202) 842-8465

Electronic Patent Application Fee Transmittal

Application Number:	14129401
Filing Date:	26-Dec-2013
Title of Invention:	ABSORBENT ARTICLE HAVING INTAKE STRUCTURE
First Named Inventor/Applicant Name:	Patrik Andersson
Filer:	Nikolaus P. Schibli/Felicia Bull
Attorney Docket Number:	049121-0366-00-US-504907

Filed as Large Entity

Filing Fees for U.S. National Stage under 35 USC 371

Description	Fee Code	Quantity	Amount	Sub-Total in USD($)
Basic Filing:				
Pages:				
Claims:				
Claims in excess of 20	1615	1	80	80
Miscellaneous-Filing:				
Petition:				
Patent-Appeals-and-Interference:				
Post-Allowance-and-Post-Issuance:				

Description	Fee Code	Quantity	Amount	Sub-Total in USD($)
Extension-of-Time:				
Extension - 1 month with $0 paid	1251	1	200	200
Miscellaneous:				
		Total in USD ($)		**280**

Electronic Acknowledgement Receipt

EFS ID:	21425761
Application Number:	14129401
International Application Number:	
Confirmation Number:	4049
Title of Invention:	ABSORBENT ARTICLE HAVING INTAKE STRUCTURE
First Named Inventor/Applicant Name:	Patrik Andersson
Customer Number:	105855
Filer:	Nikolaus P. Schibli/Felicia Bull
Filer Authorized By:	Nikolaus P. Schibli
Attorney Docket Number:	049121-0366-00-US-504907
Receipt Date:	06-FEB-2015
Filing Date:	26-DEC-2013
Time Stamp:	15:17:39
Application Type:	U.S. National Stage under 35 USC 371

Payment information:

Submitted with Payment	yes
Payment Type	Credit Card
Payment was successfully received in RAM	$280
RAM confirmation Number	1888
Deposit Account	
Authorized User	

The Director of the USPTO is hereby authorized to charge indicated fees and credit any overpayment as follows:

File Listing:

Document Number	Document Description	File Name	File Size(Bytes)/ Message Digest	Multi Part /.zip	Pages (if appl.)
1		49121-0366-AmndEOT.pdf	610622 0c85156ce18b9d4061984340629e77b7dd1268f9	yes	15

Multipart Description/PDF files in .zip description

Document Description	Start	End
Extension of Time	1	1
Amendment/Req. Reconsideration-After Non-Final Reject	2	2
Claims	3	7
Applicant Arguments/Remarks Made in an Amendment	8	15

Warnings:

Information:

2	Fee Worksheet (SB06)	fee-info.pdf	32844 d4f83e0e0df11ff2f05175c8d67dbd612a4686a9	no	2

Warnings:

Information:

Total Files Size (in bytes):	643466

This Acknowledgement Receipt evidences receipt on the noted date by the USPTO of the indicated documents, characterized by the applicant, and including page counts, where applicable. It serves as evidence of receipt similar to a Post Card, as described in MPEP 503.

New Applications Under 35 U.S.C. 111
If a new application is being filed and the application includes the necessary components for a filing date (see 37 CFR 1.53(b)-(d) and MPEP 506), a Filing Receipt (37 CFR 1.54) will be issued in due course and the date shown on this Acknowledgement Receipt will establish the filing date of the application.

National Stage of an International Application under 35 U.S.C. 371
If a timely submission to enter the national stage of an international application is compliant with the conditions of 35 U.S.C. 371 and other applicable requirements a Form PCT/DO/EO/903 indicating acceptance of the application as a national stage submission under 35 U.S.C. 371 will be issued in addition to the Filing Receipt, in due course.

New International Application Filed with the USPTO as a Receiving Office
If a new international application is being filed and the international application includes the necessary components for an international filing date (see PCT Article 11 and MPEP 1810), a Notification of the International Application Number and of the International Filing Date (Form PCT/RO/105) will be issued in due course, subject to prescriptions concerning national security, and the date shown on this Acknowledgement Receipt will establish the international filing date of the application.

PTO/AIA/22 (03-13)
Approved for use through 7/31/2016. OMB 0651-0031
U.S. Patent and Trademark Office; U.S. DEPARTMENT OF COMMERCE
Under the Paperwork Reduction Act of 1995, no persons are required to respond to a collection of information unless it displays a valid OMB control number.

PETITION FOR EXTENSION OF TIME UNDER 37 CFR 1.136(a)	Docket Number (Optional) 049121-0366-00-US-504907
Application Number 14/129,401	Filed December 26, 2013
For ABSORBENT ARTICLE HAVING INTAKE STRUCTURE	
Art Unit 3761	Examiner M. M. Kidwell

This is a request under the provisions of 37 CFR 1.136(a) to extend the period for filing a reply in the above-identified application.

The requested extension and fee are as follows (check time period desired and enter the appropriate fee below):

		Fee	Small Entity Fee	Micro Entity Fee	
[X]	One month (37 CFR 1.17(a)(1))	$200	$100	$50	$ 200.00
[ ]	Two months (37 CFR 1.17(a)(2))	$600	$300	$150	$
[ ]	Three months (37 CFR 1.17(a)(3))	$1,400	$700	$350	$
[ ]	Four months (37 CFR 1.17(a)(4))	$2,200	$1,100	$550	$
[ ]	Five months (37 CFR 1.17(a)(5))	$3,000	$1,500	$750	$

[ ] Applicant asserts small entity status. See 37 CFR 1.27.

[ ] Applicant certifies micro entity status. See 37 CFR 1.29.
Form PTO/SB/15A or B or equivalent must either be enclosed or have been submitted previously.

[ ] A check in the amount of the fee is enclosed.

[ ] Payment by credit card. Form PTO-2038 is attached.

[ ] The Director has already been authorized to charge fees in this application to a Deposit Account.

[X] The Director is hereby authorized to charge any fees which may be required, or credit any overpayment, to Deposit Account Number 50-0573 .

[X] Payment made via EFS-Web.

WARNING: Information on this form may become public. Credit card information should not be included on this form. Provide credit card information and authorization on PTO-2038.

I am the

[ ] applicant.

[X] attorney or agent of record. Registration number 56,994 .

[ ] attorney or agent acting under 37 CFR 1.34. Registration number _____ .

Signature	February 6, 2015 Date
Nikolaus P. Schibli, Ph.D. Typed or printed name	202.230.5832 Telephone Number

NOTE: This form must be signed in accordance with 37 CFR 1.33. See 37 CFR 1.4 for signature requirements and certifications. Submit multiple forms if more than one signature is required, see below*.

[ ] * Total of 1 forms are submitted.

PTO/SB/06 (09-11)
Approved for use through 1/31/2014. OMB 0651-0032
U.S. Patent and Trademark Office; U.S. DEPARTMENT OF COMMERCE
Under the Paperwork Reduction Act of 1995, no persons are required to respond to a collection of information unless it displays a valid OMB control number.

PATENT APPLICATION FEE DETERMINATION RECORD

Substitute for Form PTO-875

Application or Docket Number	Filing Date	
14/129,401	12/26/2013	☐ To be Mailed

ENTITY: ☒ LARGE ☐ SMALL ☐ MICRO

APPLICATION AS FILED – PART I

FOR	(Column 1) NUMBER FILED	(Column 2) NUMBER EXTRA	RATE ($)	FEE ($)
☐ BASIC FEE (37 CFR 1.16(a), (b), or (c))	N/A	N/A	N/A	
☐ SEARCH FEE (37 CFR 1.16(k), (i), or (m))	N/A	N/A	N/A	
☐ EXAMINATION FEE (37 CFR 1.16(o), (p), or (q))	N/A	N/A	N/A	
TOTAL CLAIMS (37 CFR 1.16(i))	minus 20 =	*	x $ =	
INDEPENDENT CLAIMS (37 CFR 1.16(h))	minus 3 =	*	x $ =	
☐ APPLICATION SIZE FEE (37 CFR 1.16(s))	If the specification and drawings exceed 100 sheets of paper, the application size fee due is $310 ($155 for small entity) for each additional 50 sheets or fraction thereof. See 35 U.S.C. 41(a)(1)(G) and 37 CFR 1.16(s).			
☐ MULTIPLE DEPENDENT CLAIM PRESENT (37 CFR 1.16(j))				
* If the difference in column 1 is less than zero, enter "0" in column 2.			TOTAL	

APPLICATION AS AMENDED – PART II

AMENDMENT

02/06/2015	(Column 1) CLAIMS REMAINING AFTER AMENDMENT		(Column 2) HIGHEST NUMBER PREVIOUSLY PAID FOR	(Column 3) PRESENT EXTRA	RATE ($)	ADDITIONAL FEE ($)
Total (37 CFR 1.16(i))	* 25	Minus	** 24	= 1	x $80 =	80
Independent (37 CFR 1.16(h))	* 1	Minus	***3	= 0	x $420 =	0
☐ Application Size Fee (37 CFR 1.16(s))						
☐ FIRST PRESENTATION OF MULTIPLE DEPENDENT CLAIM (37 CFR 1.16(j))						
					TOTAL ADD'L FEE	80

AMENDMENT

	(Column 1) CLAIMS REMAINING AFTER AMENDMENT		(Column 2) HIGHEST NUMBER PREVIOUSLY PAID FOR	(Column 3) PRESENT EXTRA	RATE ($)	ADDITIONAL FEE ($)
Total (37 CFR 1.16(i))	*	Minus	**	=	x $ =	
Independent (37 CFR 1.16(h))	*	Minus	***	=	x $ =	
☐ Application Size Fee (37 CFR 1.16(s))						
☐ FIRST PRESENTATION OF MULTIPLE DEPENDENT CLAIM (37 CFR 1.16(j))						
					TOTAL ADD'L FEE	

* If the entry in column 1 is less than the entry in column 2, write "0" in column 3.

** If the "Highest Number Previously Paid For" IN THIS SPACE is less than 20, enter "20".

*** If the "Highest Number Previously Paid For" IN THIS SPACE is less than 3, enter "3".

The "Highest Number Previously Paid For" (Total or Independent) is the highest number found in the appropriate box in column 1.

LIE
/SHARON HARRIS/

This collection of information is required by 37 CFR 1.16. The information is required to obtain or retain a benefit by the public which is to file (and by the USPTO to process) an application. Confidentiality is governed by 35 U.S.C. 122 and 37 CFR 1.14. This collection is estimated to take 12 minutes to complete, including gathering, preparing, and submitting the completed application form to the USPTO. Time will vary depending upon the individual case. Any comments on the amount of time you require to complete this form and/or suggestions for reducing this burden, should be sent to the Chief Information Officer, U.S. Patent and Trademark Office, U.S. Department of Commerce, P.O. Box 1450, Alexandria, VA 22313-1450. DO NOT SEND FEES OR COMPLETED FORMS TO THIS ADDRESS. **SEND TO: Commissioner for Patents, P.O. Box 1450, Alexandria, VA 22313-1450.**

If you need assistance in completing the form, call 1-800-PTO-9199 and select option 2.

PTO/SB/08a (07-09)
Approved for use through 07/31/2012. OMB 0651-0031
U.S. Patent and Trademark Office; U.S. DEPARTMENT OF COMMERCE
Under the Paperwork Reduction Act of 1995, no persons are required to respond to a collection of information unless it contains a valid OMB control number.

Substitute for form 1449/PTO

INFORMATION DISCLOSURE STATEMENT BY APPLICANT

(Use as many sheets as necessary)

Sheet	1	of	2

Complete if Known	
Application Number	14/129,401
Filing Date	December 26, 2013
First Named Inventor	Patrik ANDERSSON
Art Unit	3761
Examiner Name	M. M. Kidwell
Attorney Docket Number	049121-0366-00-US-504907

U. S. PATENT DOCUMENTS

Examiner Initials*	Cite No.[1]	Document Number Number-Kind Code[2] *(if known)*	Publication Date MM-DD-YYYY	Name of Patentee or Applicant of Cited Document	Pages, Columns, Lines, Where Relevant Passages or Relevant Figures Appear

FOREIGN PATENT DOCUMENTS

Examiner Initials*	Cite No.[1]	Foreign Patent Document Country Code[3]-Number[4]-Kind Code[5] *(if known)*	Publication Date MM-DD-YYYY	Name of Patentee or Applicant of Cited Document	Pages, Columns, Lines, Where Relevant Passages Or Relevant Figures Appear	T[6]
	A	EP-0316771-A2	05-24-1989	Kimberly Clark Co		
	B	EP-1374817-A1	01-02-2004	Japan Absorbent Tech Inst and Mitsubishi Corp.		
	C	EP-2184042-A2	05-12-2010	Buckeye Technologies, Inc		
	D	EP-2298258-A1	03-23-2011	Johnson & Johnson Ind Com		
	E	WO-2004/084784-A1	10-07-2004	Sca Hygiene Products Ab,		
	F	WO-2009/005431-A1	01-08-2009	Sca Hygiene Products Ab,		

Examiner Signature		Date Considered	

*EXAMINER: Initial if reference considered, whether or not citation is in conformance with MPEP 609. Draw line through citation if not in conformance and not considered. Include copy of this form with next communication to applicant. [1] Applicant's unique citation designation number (optional). [2] See Kinds Codes of USPTO Patent Documents at **www.uspto.gov** or MPEP 901.04. [3] Enter Office that issued the document, by the two-letter code (WIPO Standard ST.3). [4] For Japanese patent documents, the indication of the year of the reign of the Emperor must precede the serial number of the patent document. [5]Kind of document by the appropriate symbols as indicated on the document under WIPO Standard ST.16 if possible. [6] Applicant is to place a check mark here if English language Translation is attached.

PTO/SB/08b (07-09)
Approved for use through 07/31/2012. OMB 0651-0031
U.S. Patent and Trademark Office; U.S. DEPARTMENT OF COMMERCE
Under the Paperwork Reduction Act of 1995, no persons are required to respond to a collection of information unless it contains a valid OMB control number.

Substitute for form 1449/PTO

INFORMATION DISCLOSURE STATEMENT BY APPLICANT

(Use as many sheets as necessary)

Sheet	2	of	2

Complete if Known	
Application Number	14/129,401
Filing Date	December 26, 2013
First Named Inventor	Patrik ANDERSSON
Art Unit	3761
Examiner Name	M. M. Kidwell
Attorney Docket Number	049121-0366-00-US-504907

NON PATENT LITERATURE DOCUMENTS

Examiner Initials*	Cite No.[1]	Include name of the author (in CAPITAL LETTERS), title of the article (when appropriate), title of the item (book, magazine, journal, serial, symposium, catalog, etc.), date, page(s), volume-issue number(s), publisher, city and/or country where published.	T[2]
	A	Search Report issued in European Patent Application No. 11868516.3 on December 8, 2014 (5 pages)	

Examiner Signature		Date Considered	

*EXAMINER: Initial if reference considered, whether or not citation is in conformance with MPEP 609. Draw line through citation if not in conformance and not considered. Include copy of this form with next communication to applicant.

[1] Applicant's unique citation designation number (optional). [2] Applicant is to place a check mark here if English language Translation is attached.

Europäisches Patentamt
European Patent Office
Office européen des brevets

European Patent Office
80298 MUNICH
GERMANY

Questions about this communication ?
Contact Customer Services at www.epo.org/contact

Valea AB
Box 1098
405 23 Göteborg
SUEDE

Date
08.12.14

Reference	Application No./Patent No.
PG18340EPPC	11868516.3 - 1308 / 2726045 PCT/SE2011050859
Applicant/Proprietor	
Sca Hygiene Products AB	

Communication

The extended European search report is enclosed.

The extended European search report includes, pursuant to Rule 62 EPC, the supplementary European search report (Art. 153(7) EPC) and the European search opinion.

Copies of documents cited in the European search report are attached.

☑ 0 additional set(s) of copies of such documents is (are) enclosed as well.

Refund of the search fee
If applicable under Article 9 Rules relating to fees, a separate communication from the Receiving Section on the refund of the search fee will be sent later.

Should you wish to further prosecute this application in the examination phase, your attention is drawn to the provisions of Rule 70a EPC. An invitation to respond to the extended European search report will be issued shortly (R. 70(2) EPC).

Europäisches Patentamt • European Patent Office • Office européen des brevets

EPO Form 1507S 06.12

Europäisches Patentamt
European Patent Office
Office européen des brevets

SUPPLEMENTARY EUROPEAN SEARCH REPORT

Application Number
EP 11 86 8516

DOCUMENTS CONSIDERED TO BE RELEVANT

Category	Citation of document with indication, where appropriate, of relevant passages	Relevant to claim	CLASSIFICATION OF THE APPLICATION (IPC)
A	EP 2 298 258 A1 (JOHNSON & JOHNSON IND COM [BR]) 23 March 2011 (2011-03-23) * paragraphs [0032] - [0035]; claim 1; figures 3,4 *	1-21	INV. A61F13/537 A61F13/535 A61F13/539
A	WO 2009/005431 A1 (SCA HYGIENE PROD AB [SE]; LARSSON GUNNAR [SE]) 8 January 2009 (2009-01-08) * claims 1,5-7,14; figures *	1-21	
A	WO 2004/084784 A1 (SCA HYGIENE PROD AB [SE]; GUIDOTTI TED [SE]; EDWARDSSON GUNNAR [SE]; E) 7 October 2004 (2004-10-07) * page 6, lines 10-25; claim 12; figures 1,2 *	1-21	
A	EP 1 374 817 A1 (JAPAN ABSORBENT TECH INST [JP]; MITSUBISHI CORP [JP] JAPAN ABSORBENT T) 2 January 2004 (2004-01-02) * abstract; figures *	1-21	
A	EP 0 316 771 A2 (KIMBERLY CLARK CO [US]) 24 May 1989 (1989-05-24) * claims 1-3,9; figures *	1-21	TECHNICAL FIELDS SEARCHED (IPC) A61F
A	EP 2 184 042 A2 (BUCKEYE TECHNOLOGIES INC [US]) 12 May 2010 (2010-05-12) * paragraphs [0006], [0010], [0017], [0019]; figures 2,3 *	1-21	

The supplementary search report has been based on the last set of claims valid and available at the start of the search.

1

Place of search	Date of completion of the search	Examiner
Munich	25 November 2014	Elsässer, Ralf

CATEGORY OF CITED DOCUMENTS

X : particularly relevant if taken alone
Y : particularly relevant if combined with another document of the same category
A : technological background
O : non-written disclosure
P : intermediate document

T : theory or principle underlying the invention
E : earlier patent document, but published on, or after the filing date
D : document cited in the application
L : document cited for other reasons

& : member of the same patent family, corresponding document

EPO FORM 1503 03.82 (P04C04)

ANNEX TO THE EUROPEAN SEARCH REPORT ON EUROPEAN PATENT APPLICATION NO. EP 11 86 8516

This annex lists the patent family members relating to the patent documents cited in the above-mentioned European search report.
The members are as contained in the European Patent Office EDP file on
The European Patent Office is in no way liable for these particulars which are merely given for the purpose of information.

25-11-2014

Patent document cited in search report		Publication date	Patent family member(s)			Publication date
EP 2298258	A1	23-03-2011	AR	078265	A1	26-10-2011
			AU	2010219291	A1	24-03-2011
			BR	PI1003597	A2	29-05-2012
			CA	2712563	A1	04-03-2011
			CN	102008375	A	13-04-2011
			CO	6380004	A1	15-02-2012
			EP	2298258	A1	23-03-2011
			KR	20110025619	A	10-03-2011
			RU	2010136918	A	10-03-2012
			US	2011060303	A1	10-03-2011
			US	2012323201	A1	20-12-2012
			US	2012323202	A1	20-12-2012
			US	2013178813	A1	11-07-2013
			US	2014249497	A1	04-09-2014
WO 2009005431	A1	08-01-2009	AT	553735	T	15-05-2012
			BR	PI0721790	A2	26-02-2013
			CN	101686886	A	31-03-2010
			EP	2173303	A1	14-04-2010
			US	2010331804	A1	30-12-2010
			WO	2009005431	A1	08-01-2009
WO 2004084784	A1	07-10-2004	AT	552811	T	15-04-2012
			AU	2004224477	A1	07-10-2004
			EP	1605882	A1	21-12-2005
			JP	4637828	B2	23-02-2011
			JP	2006521166	A	21-09-2006
			MX	PA05009487	A	18-10-2005
			PL	211867	B1	31-07-2012
			RU	2322957	C2	27-04-2008
			WO	2004084784	A1	07-10-2004
			ZA	200507154	A	28-06-2006
EP 1374817	A1	02-01-2004	AT	495722	T	15-02-2011
			BR	0207837	A	22-06-2004
			CA	2438337	A1	29-08-2002
			CN	1492751	A	28-04-2004
			CN	102172340	A	07-09-2011
			EP	1374817	A1	02-01-2004
			ES	2359905	T3	30-05-2011
			JP	4840895	B2	21-12-2011
			JP	2002238946	A	27-08-2002
			KR	20030077031	A	29-09-2003
			MX	PA03007480	A	08-12-2003
			RU	2280427	C2	27-07-2006
			US	2004087927	A1	06-05-2004

EPO FORM P0459

For more details about this annex : see Official Journal of the European Patent Office, No. 12/82

ANNEX TO THE EUROPEAN SEARCH REPORT ON EUROPEAN PATENT APPLICATION NO. EP 11 86 8516

This annex lists the patent family members relating to the patent documents cited in the above-mentioned European search report.
The members are as contained in the European Patent Office EDP file on
The European Patent Office is in no way liable for these particulars which are merely given for the purpose of information.

25-11-2014

Patent document cited in search report		Publication date	Patent family member(s)			Publication date
			WO	02065965	A1	29-08-2002
EP 0316771	A2	24-05-1989	AT	125684	T	15-08-1995
			AU	630763	B2	05-11-1992
			AU	2561388	A	25-05-1989
			AU	6599790	A	24-01-1991
			CA	1306081	C	11-08-1992
			DE	3854257	D1	07-09-1995
			DE	3854257	T2	04-01-1996
			EP	0316771	A2	24-05-1989
			ES	2075834	T3	16-10-1995
			JP	H021268	A	05-01-1990
			JP	2901256	B2	07-06-1999
			MX	173803	B	29-03-1994
			TR	28030	A	11-12-1995
EP 2184042	A2	12-05-2010	AT	527972	T	15-10-2011
			AU	761200	B2	29-05-2003
			AU	6198200	A	28-12-2000
			BR	0012306	A	14-05-2002
			CA	2376369	A1	14-12-2000
			CA	2632700	A1	14-12-2000
			CN	1358080	A	10-07-2002
			DE	00948502	T1	19-05-2004
			DE	20024022	U1	22-04-2010
			EP	1191915	A1	03-04-2002
			EP	2184042	A2	12-05-2010
			ES	2270745	T1	16-04-2007
			JP	4995386	B2	08-08-2012
			JP	5404835	B2	05-02-2014
			JP	2003518958	A	17-06-2003
			JP	2012125597	A	05-07-2012
			MX	PA01012660	A	04-06-2002
			US	6420626	B1	16-07-2002
			US	2002165509	A1	07-11-2002
			WO	0074620	A1	14-12-2000

EPO FORM P0459

For more details about this annex : see Official Journal of the European Patent Office, No. 12/82

Europäisches Patentamt
European Patent Office
Office européen des brevets

European Patent Office
80298 MUNICH
GERMANY
Tel: +49 89 2399 0
Fax: +49 89 2399 4465

Application No.: 11 868 516.3

The application and the invention to which it relates seem to meet the requirements of the EPC. Upon presence of a valid request for examination and consideration by the examining division, a communication under Rule 71(3) EPC may be issued.

(19) Europäisches Patentamt
European Patent Office
Office européen des brevets

(11) Publication number: **0 316 771 A2**

(12) **EUROPEAN PATENT APPLICATION**

(21) Application number: **88118757.9**

(51) Int. Cl.4: **A61F 13/18**

(22) Date of filing: **10.11.88**

(30) Priority: **20.11.87 US 123483**

(43) Date of publication of application:
24.05.89 Bulletin 89/21

(84) Designated Contracting States:
AT BE CH DE ES FR GB GR IT LI LU NL SE

(71) Applicant: **KIMBERLY-CLARK CORPORATION**
401 North Lake Street
Neenah Wisconsin 54956(US)

(72) Inventor: **Sherrod, Earle Harry**
515 North Wood St.
Appleton Wisconsin 54911(US)
Inventor: **Lassen, Frederick Oma**
749 Oak Street
Neenah Wisconsin 54956(US)

(74) Representative: **Diehl, Hermann Dr. et al**
Diehl & Glaeser, Hiltl & Partner
Flüggenstrasse 13
D-8000 München 19(DE)

(54) **Pad for absorption of human exudate.**

(57) A pad (12) is provided, comprised of a permeable cover (14) and an impermeable backing member (15) with an absorbent (20,30) therebetween. The pad (12) further is provided with a fluid transfer or fluid movement structure (31,32) that is on at least a part (34) of the surface of the absorbent (28,30),between the permeable member (14) and the absorbent (28,30), extends down (36) through the absorbent (28,30) and extends to the area (32) between the impermeable backing member (15) and the absorbent (28,30). The fluid transfer member (31,32) is a material that wicks fluids but has at least some hydrophobic component that allows the fluids to be easily transferred from the fluid movement member (31,32) to a more hydrophilic absorbent (28,30) such as wood fluff that will store the fluid. The fluid transfer member (31,32) may be formed of carded webs of polypropylene and polyester or of meltblown polypropylene:

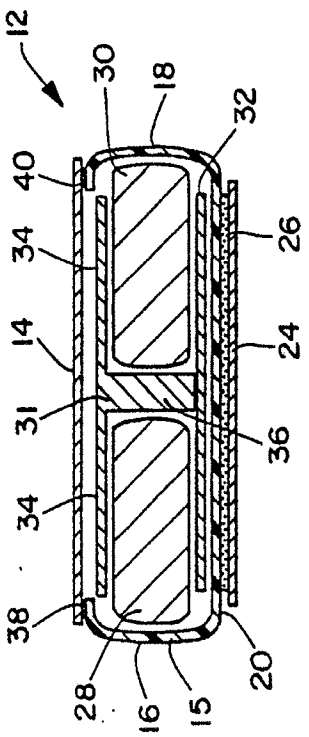

FIG. 4

EP 0 316 771 A2

PAD FOR ABSORPTION OF HUMAN EXUDATE

The present invention relates to pads for absorption of human exudate, especially to a feminine pad.

In the use of sanitary napkins or pads for absorption of human exudate, there has been a problem in that the napkin is provided with much more absorbent capacity than is normally utilized by the user of the pad. The menstrual fluid tends to be distributed in the longitudinal middle of the pad. Further, the fluid in the middle section of the pad tends to be on the top of the pad rather than in the lower absorbent portion. This concentration of the fluid in the middle portion of the pad leads to premature failure as fluid may leak over the edge of the pad or the pad may leak when it is deformed by movement of the wearer.

Attempts have been made to solve this problem by making sanitary napkins so that they more closely follow the shape of the body and have their greatest absorption capacity where the need is greatest. However, even with such pads side leakage is still a substantial problem. Further, the problem of the absorption capacity of the pad not being used because of concentration of menstrual fluids in the upper or body side of the absorbent rather than down towards the back of the absorbent remains a problem.

Another problem with conventional sanitary pads as well as incontinence pads is that if fluid is applied to the pad at a rapid rate the pad is often unable to absorb the fluid rapidly enough and the fluid will run off the sides of the pad.

It has been proposed in U.S. 4,333,462 - Holtman that a pad having center reservoirs be formed in order to provide for receiving body fluid and its absorption. U.S. 4,029,101 - Chesky et al. discloses a pad having an open longitudinal center slot that allows fluid to enter into the midportion of the pad. It is also disclosed in Chesky et al. that the pad may be provided with an elongated baffle to wick material laterally within the pad.

There remains a need for a pad that will make more efficient use of the absorbent available in the pad. Further, there remains a need for a pad that will better resist bending and twisting in order to present correct placement for delivery of exudate to the pad. A need also exists for a pad that will resist side leakage if the pad is twisted.

It is, therefore, an object of the invention to overcome disadvantages of prior pads for absorption of human exudate. This object is solved by the pad described in the independent claims 1 and 2. Further advantageous features of the pad are evident from the dependent claims.

The invention provides a pad that also reduces bunching and twisting. Further, the invention provides a feminine pad that has reduced side leakage.

Another additional feature of the invention is that it provides a feminine pad having efficient use of absorbents.

The pad of the invention is particularly absorbent for the perineum and in particular feminine care pads with a construction allowing improved distribution of fluids.

The invention, therefore, relates to an absorbent product, such as a sanitary napkin or incontinence product, comprising an absorbent body and a fluid-permeable layer located closest to the user when in use and a fluid-impermeable layer disposed on the opposite side - the back - of the absorbent body.

According to the invention it is provided a pad that is comprised of a permeable cover and an impermeable backing member with an absorbent therebetween. The pad is further provided with a fluid transfer or fluid movement structure that is on at least a part of the surface of the absorbent between the permeable member and the absorbent, extends down through the absorbent and extends to the area between the impermeable backing member and the absorbent. The fluid transfer member is a material that wicks fluids but has at least some hydrophobic component that allows the fluids to be easily transferred from the fluid movement member to a more hydrophilic absorbent such as wood fluff that will store and contain the fluid. The preferred fluid transfer member may be formed of carded webs of rayon or cotton blended with polypropylene or of meltblown polypropylene with pulp.

Further details and advantages of the invention will become evident from the enclosed drawings and their description:

Figure 1 is a top view of a feminine pad in accordance with the invention.

Figure 2 is a side view of a pad in accordance with the invention.

Figure 3 is an end view of a pad in accordance with the invention.

Figure 4 is a cross-sectional view of the pad of Figure 1 on cross-sectional line 4-4.

Figure 5 is a cross-sectional view of the pad of the invention on cross-sectional line 5-5 of Figure 1.

Figure 6 is a cross-sectional view of an alternate pad design of the invention.

Figure 7 is a cross-sectional view of an alternate embodiment of the invention.

Figure 8 is a top view of a prior art pad illustrating the stain area.

Figure 9 is a cross-sectional view of the pad of Figure 8 on cross-sectional line 9-9.

Figure 10 is a top view of a pad in accordance with the invention illustrating a stain pattern.

Figure 11 is a cross-sectional view of the pad of Fig. 10 cross-sectional line 2-2.

Figure 12 is a cross-sectional view of an alternate embodiment of a pad in accordance with the invention.

Figure 13 is a cross-sectional view of an alternate pad in accordance with the invention.

The pads of the instant invention have numerous advantages over prior pads for absorption of human exudate, particularly those used as catamenial devices. The pads of the instant invention provide transport of menstrual fluids down through the pads such that the fluids are entrapped within the pad itself and do not reside near the surface where they may be squeezed out by movement of the wearer. The pads of the invention also provide a cleaner appearance as the stain does not spread as far on the surface as it typically would with prior pads. The pads of the invention also are less likely to leak from the sides, particularly prior to a great deal of fluid being absorbed by the pad. Fluids are transported to the center and underside of the pad rather than remaining at or near the surface of the pad where they may cause leakage. These and other advantages, such as an increased rate of absorbency, will be apparent from the description of the drawings and explanation below.

Figure 1 is a top view of a feminine pad 12 in accordance with the invention. The pad has a bodyside cover 14 and longitudinal edges 16 and 18. The pad is gathered at ends 20 and 22. As shown in Figures 2 and 3 the pad 12 is provided with a peel strip 24. The peel strip 24 is removed prior to placement of the pad in the user's undergarment.

Figure 4 is a cross-sectional view on line 4-4 of pad 12 in Figure 1. Pad 12 is provided with cover 14 and an impermeable member 15 that forms sides 16 and 18 and backing 20. The peel strip 24 covers garment attachment adhesive 26. The inner portion of the napkin 12 is formed of absorbents 28 and 30. The fluid movement structures 31 and 32 are formed of the same or similar materials. When considered together absorbents 31 and 32 form an I-beam shape cross-section. For best performance the absorbents 31 and 32 should be in contact to provide fluid transfer. The material forming structures 31 and 32 will rapidly absorb fluid and transfer it throughout pad 12. However, the fluid movement structures 30 and 32 will give up fluid easily to the absorbents 28 and 30. Structure 31 is composed of a surface portion 34 that overlies the absorbents 28 and 30. It is further provided with a centered member 36 between absorbents 28 and 30 providing fluid movement from the top of the bottom of pad 12. Member 31 will gather fluids at the surface of the pad and transfer them down through the central portion of the pad to the bottom fluid movement member 32 as well as into the reservoir members 28 and 30. The cover member 14 is adhesively connected to an impermeable member 15 in areas 38 and 40. Alternatively the pad could be wrapped by the permeable member and sealed at the bottom. As illustrated in the Figure 5 cross-sectional view of pad 12 on line 5-5 of Figure 1, the fluid movement members 31 and 32 do not extend the entire longitudinal length of the pad, but are located in the center one-half to two-thirds of longitudinal length.

Figure 6 is a cross-sectional view of an alternate embodiment pad of the invention. In the embodiment of Figure 6 the pad 46 is provided with a permeable cover material 48 that is wrapped around the entire pad and overlapped with adhesive connection at 50. The pad has an impermeable baffle 52 and a peel strip 54. The peel strip covers two parallel lines of adhesive 56 and 58 for garment attachment. Alternatively a single wide band of adhesive could be used rather than multiple lines as shown. The absorbent comprises two reservoir absorbent members 60 and 62. The fluid transfer or fluid movement member 66 extends between the bodyside surface 68 and absorbent 60 and 62. The fluid transfer member 66 further is provided with a folded portion 70 extending down between the absorbent members 60 and 62 for distributing fluids down into the pad and into the lower portion of the reservoir absorbents 60 and 62.

Figure 7 illustrates in cross-section another alternate pad 80 of the invention. Pad 80 has a permeable bodyside member 82 and an impermeable member 84 forming the backside 86 and the two longitudinal sides 88 and 90. The pad is provided with peel strip 92 covering the garment attachment adhesive strip 94. The absorbents comprise fluid movement members 96 and 98 as well as the fluid holding or reservoir absorbents 100 and 102. Fluid movement member 98 is wrapped around the portion of absorbent 100 that is towards the center of the pad. Absorbent 96 is wrapped around the portion of absorbent 102 that is towards the center of the pad. Members 96 and 98 provide transfer of fluid down through the center 104 of the pad to the area between the bottom 86 and the absorbent 100 and 102.

Illustrated in Figures 8 and 9 is a used pad of the prior art. Figure 8 is a top view of a pad 110 of the prior art. Area 112 is a catamenial fluid stain.

Figure 9 is a cross-section view on cross-section line 9-9 of pad 110 of Figure 8. As illustrated in cross-section the pad 110 is formed with a bodyside cover 114 and an impermeable baffle 116. The pad further is provided with an absorbent 118 such as wood fluff. The stain 112 is wider at the top 120 than at the bottom portion 122. It generally has the shape of an inverted truncated pyramid. Therefore the absorbent in areas 124 and 126 is wasted and a large stain 112 is on the top of the pad.

Figures 10 and 11 illustrate the flow pattern of catamenial fluid in a pad in accordance with the invention. Pad 130 has an area of catamenial fluid 132 on the bodyside surface 134. Figure 11 is a cross-sectional view of pad 130 illustrating the flow of catamenial fluid in the pad. Impermeable member 136 surrounds the absorbents at the sides and back of the pad. The absorbents comprise the bulk or reservoir absorbents 138 and 140 that will preferentially absorb fluids from the fluid movement members 142 and 144. The fluid movement members transfer fluid from the area 132 on the upper side of the absorbent through the I-beam rib portion 146 and to the bottom absorbent 144. While illustrated with a space between absorbents 144 and 146 they should be in contact for best performance. The fluids are then absorbed into areas 148 and 150 of absorbents 138 and 140 respectively. The pad is provided with adhesive 152 for garment attachment. The peel strip 154 covers the garment attachment adhesive 152. This pad 130 illustrates that the stain 132 is not near the edges of the pad and fluid has transferred to the interior of pad 130. In contrast pad 110 has fluid stain 112 near the longitudinal side edges of the pad where leaking would easily occur.

Figures 12 and 13 illustrate alternative embodiments of the invention in which alternative absorbent structures such as a superabsorbent layer is utilized. Pad 160 as illustrated in cross-section in Figure 12 is comprised of an impermeable baffle member 162 that forms the sides 164 and 166 and the bottom 168 of the pad 160. The pad in conventional manner is provided with garment attachment adhesive 170 covered by peel strip 172. The bodyside permeable member 174 is placed on the bodyside of the pad. The absorbents comprise fluid movement members 176 and 178. Liquid storage layer 180 comprises a superabsorbent containing sheet. Absorbents 182 and 184 are a bulk absorbent such as wood fluff. The I-beam shape fluid movement members 176 and 178 provide movement of the fluid from the top surface of the member 186 through the middle portion of the fluid movement member 188 to the bottom 178. New layer 180 may be an absorbent system such as a sheet of superabsorbent, a microfiber sheet or may be a carrier for superabsorbent particles. Superabsorbents generally are hydrocolloidal polymers that have the ability to absorb greater than thirty times their weight in fluid. However, the absorption of such fluid is not extremely rapid. Therefore, their placement at the bottom allows time for absorption of fluids from the movement member 178. Illustrated in Figure 13 is a pad 190 that is composed of an impermeable baffle member 192 that forms the sides 194 and 196 of the pad. The pad in conventional manner is provided with a garment attachment adhesive 198 and a peel strip 200. The bodyside surface is provided with a permeable member 202. Fluids as they pass through permeable member 202 contact the fluid movement members 204 and 206 that are wrapped around the inner portions of the absorbents 208 and 210. A superabsorbent containing layer 212 is provided beneath the lower portion of the fluid transfer members 204 and 206.

The fluid movement structure or fluid transfer material may be any material that will readily transfer fluids as well as give up fluids to absorbents such as wood fluff. These materials generally have a hydrophilic and a hydrophobic component. Suitable materials are bonded carded webs, coform and meltblown materials. Coform is an air formed blend of meltblown polymer and staple fibers, most commonly meltblown polypropylene and devillicated wood fibers.

Preferred materials include ultrasonically bonded carded webs that are blends of polypropylene, polyester and rayon. Another preferred material is macrofiber coform which may be defined as coform that has a fiber diameter of greater than about 15μm diameter. Another preferred material is a bonded carded web of a blend of polyester and rayon. The transfer material should have a hydrophilic component to facilitate the flow of fluids within the transfer layer. However it should also include a hydrophobic component in order that the fluids will preferentially transfer to other absorbents that are more uniformly hydrophilic rather than be retained. Further, it is possible that some of all of the fibers forming the transfer members may be treated prior or during formation of the carded web or coform in order to make them hydrophilic or hydrophobic as the case may be. It is possible that the coform materials may be blends of staple fibers such as rayon as well as wood in combination with the air-formed polypropylene fibers. A bonded carded web of rayon and polyester blend that has been spot bonded to a substrate of spunbond polypropylene also may be utilized for transfer.

The material selected as the reservoir or bulk absorbent that absorbs the fluids from the transfer members in these products may be any material that will preferentially absorb fluids from the trans-

fer layers. Further such materials should not preferentially cause flow of liquid from the reservoir absorbent back to the transfer material and therefore may be any absorbent with good liquid holding ability and the ability to preferentially absorb fluids from the transfer member. Typical of such materials are cellulose sponge, polymer sponge, tissue and gauze. The preferred material is wood fluff as it has high liquid holding ability and low cost. It is also possible that superabsorbents or other absorbent materials such as microfibers may be added to the bulk absorbent in order to better hold fluid. Superabsorbents are hydrogel materials that have the ability to hold greater than thirty times their weight of fluid.

The invention has the advantage that the Z-direction transfer is improved such that fluids are quickly and efficiently moved from the surface of the pad between the cover and the bulk absorbent down through the middle of the pad and to the bottom below the bulk absorbent. The bulk absorbent then is able to preferentially absorb fluids from the transfer member. The pads further have the advantage that by having the open area in the middle between the bulk absorbents the pad tends to flex in the middle and is better able to conform to the body, thereby bunching and twisting less. As it flexes with the middle portion lifting upward for better contact, the liquid transfer member then is better exposed to initial contact of the fluid with the pad. The pads of the invention generally do not require a tissue wrapping member around the fluff absorbents. The use of the carded web or melt-blown liquid movement members provide sufficient strength that the tissue wrap of the fluff is not necessary. This is a cost savings in that the wrap is not necessary.

Although the invention has been described with specific examples, it will be understood that the description thereof is intended to be illustrative rather than exhaustive. Details of construction may be modified or changed without departing from the spirit or scope of the invention. For instance, the bulk or reservoir absorbent could be formed of layers of different density in order to further segregate absorptive abilities. Further, other layers such as reinforcing layers could be utilized. The invention while described with reference primarily to feminine pads also would be suitable for use in incontinence products or diapers. The invention also would find use in elasticized incontinent garments, diapers or feminine care products that have the longitudinal center edges elasticized to shape the garment.

Claims

1 A pad (12,46,80,160,190) for absorption of human exudate comprising a transfer material (31,32,66,96,98,176,178,204,206) wherein said transfer material is adapted to move liquids from the middle portion of said bodyside surface down through said pad to an area adjacent an impermeable backing layer (15,52,84,162,192) for said pad (12,46,80,160,190)

2. The pad of claim 1 wherein said pad further comprises a bulk absorbent (28,30,60,62,100,102,182,184,208,210) that will absorb fluids from said transfer material (31,32,66,96,98,176,178,204,206).

3. The pad of claim 2, wherein said transfer material (31,32) extends between said impermeable backing member (15) and the bulk absorbent (28,30) of said pad (12).

4. A feminine pad comprising a bodyside permeable member (14,68,92,174,202) an impermeable backing (15,52,84,162,192 , an absorent (28,30,60,62,100,102,182,184,208,210) therebetween and a fluid movement structure (31,32,66,96,98,176,178,204,206) extending over a portion of said absorbent below said cover, extending through said absorbent and said impermeable backing (15,52,84,162,192).

5. The pad of one of the preceding claims, wherein said transfer material (31,32,66,96,98,176,178,204,206) extends through the longitudinal midportion of said pad (12,46,80,160,190).

6. The pad of one of the preceding claims, wherein said transfer material (31,32) has an I-beam cross sectional shape.

7. The pad of one of the preceding claims whrein said bulk absorbent (28,30) is located on either side of a portion (36) of said transfer material (31,32) extending down the longitudinal center of said pad (12).

8. The pad of one of the preceding claims further comprising a liquid storage member (180,212) comprising superabsorbent adjacent said impermeable backing member (162,192) and contacting said transfer material (176,178,204,206) for fluid transfer from said transfer member to said storage member (180,212).

9. The pad of one of the preceding claims wherein said transfer material is selected from the group consisting of carded webs of polyester fibers, rayon fibers, polypropylene fibers and mixtures thereof.

10. The pad of one of the preceding claims wherein said transfer member (31,32) extends between about one-half and about two-thirds the length of said pad (12).

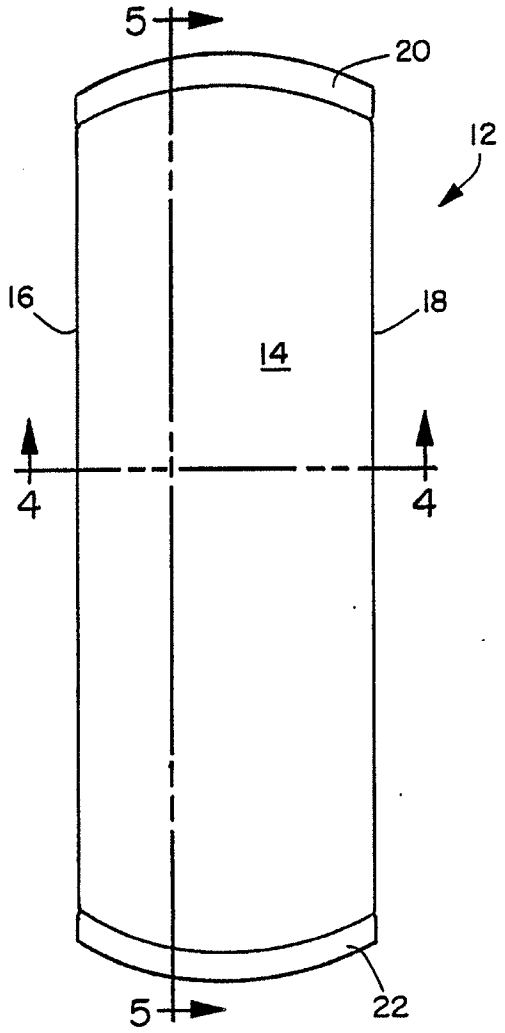

FIG. 1

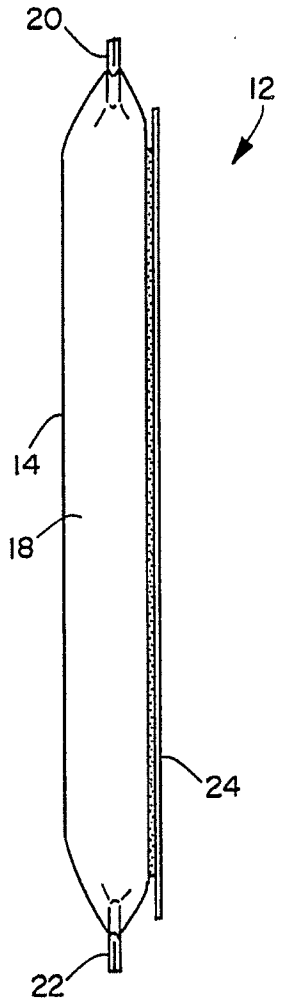

FIG. 2

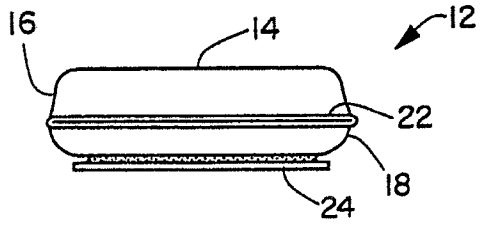

FIG. 3

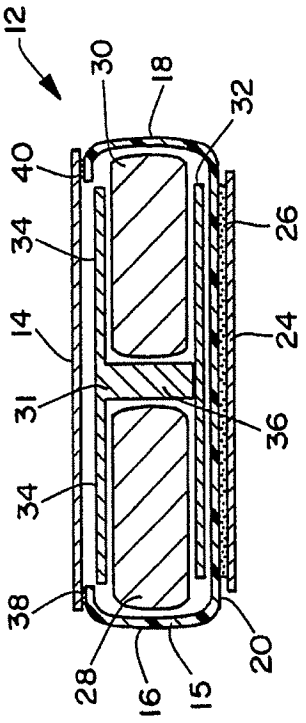
12
30
18
32
40
34
26
14
24
31
36
34
38
28
16
15
20

FIG. 4

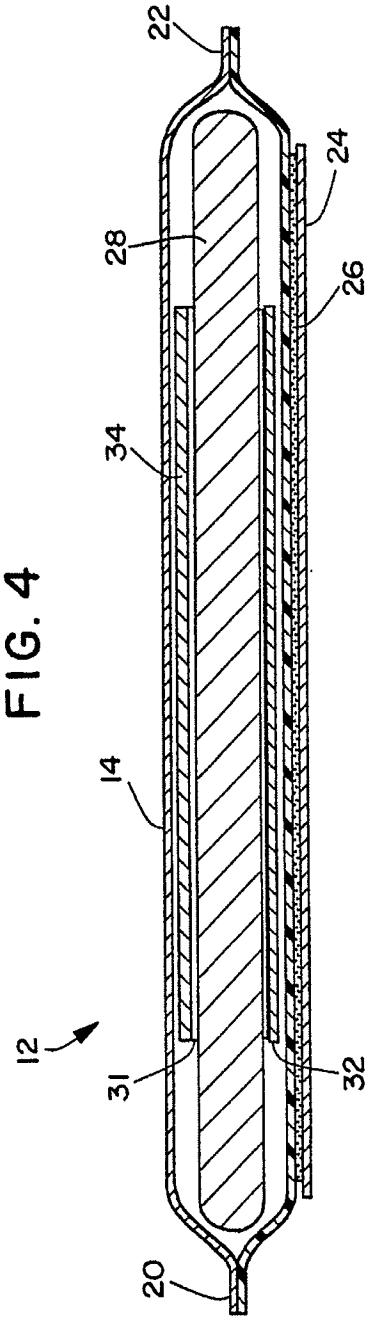
22
24
28
26
34
14
12
31
32
20

FIG. 5

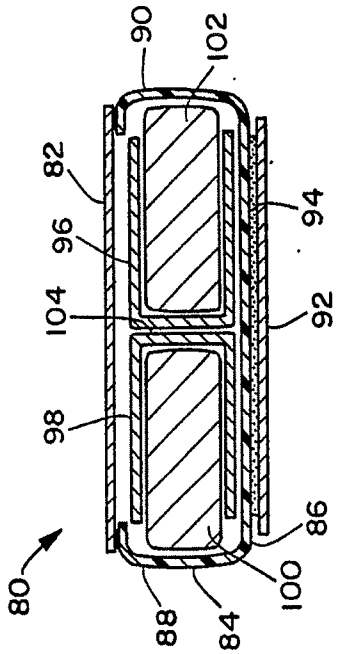

FIG. 7

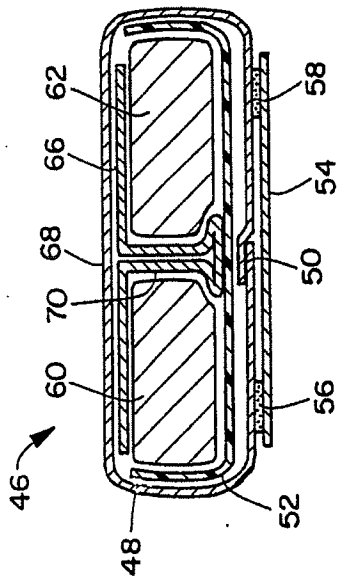

FIG. 6

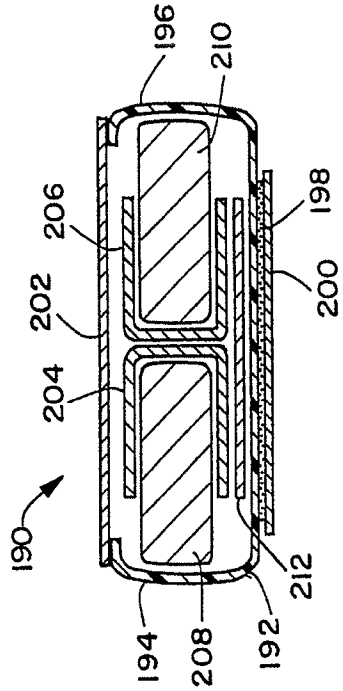

FIG. 13

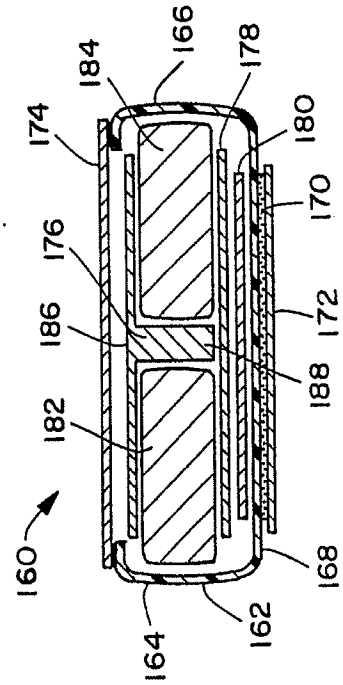

FIG. 12

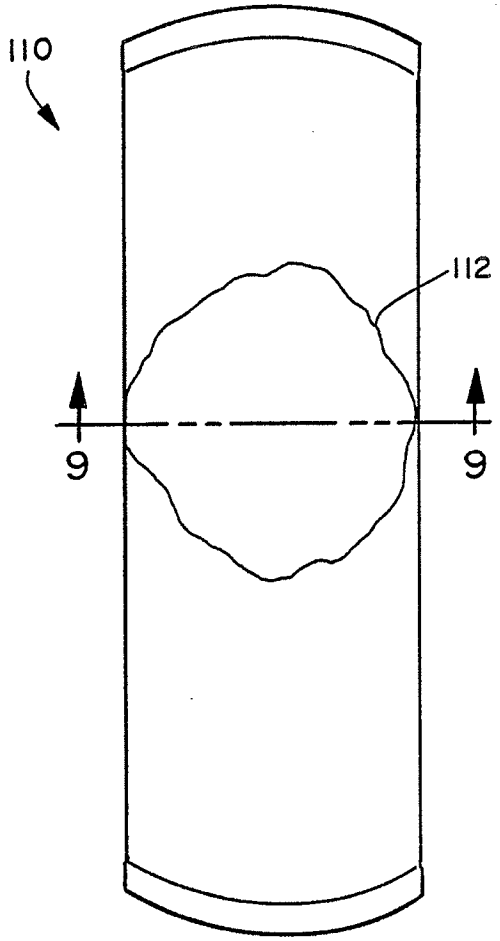

FIG. 8 (PRIOR ART)

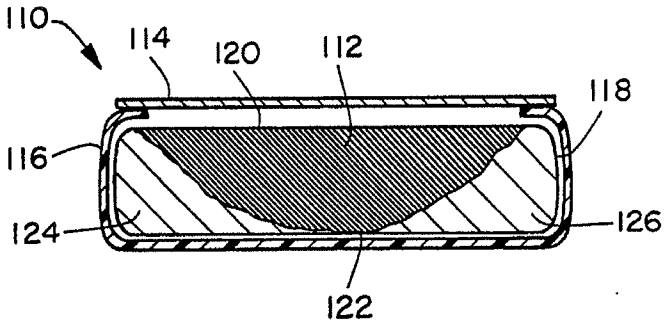

FIG. 9

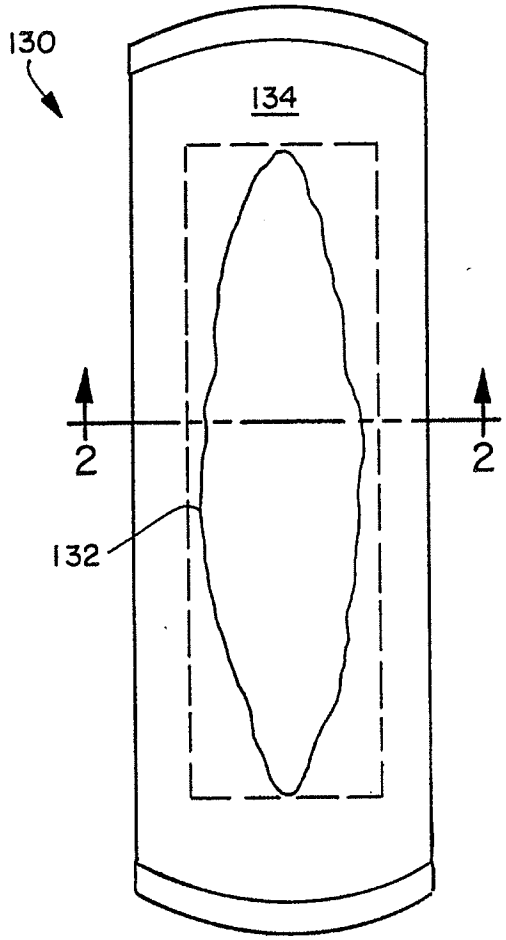

FIG. 10

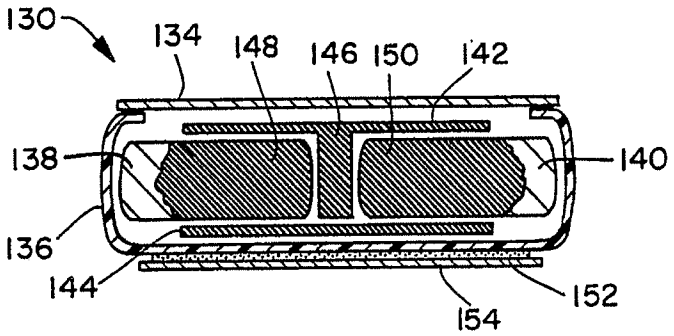

FIG. 11

(19) Europäisches Patentamt
European Patent Office
Office européen des brevets

(11) EP 1 374 817 A1

(12) EUROPEAN PATENT APPLICATION
published in accordance with Art. 158(3) EPC

(43) Date of publication:
02.01.2004 Bulletin 2004/01

(21) Application number: 02712456.9

(22) Date of filing: 19.02.2002

(51) Int Cl.7: A61F 13/537

(86) International application number:
PCT/JP2002/001419

(87) International publication number:
WO 2002/065965 (29.08.2002 Gazette 2002/35)

(84) Designated Contracting States:
AT BE CH CY DE DK ES FI FR GB GR IE IT LI LU MC NL PT SE TR
Designated Extension States:
AL LT LV MK RO SI

(30) Priority: 20.02.2001 JP 2001043494

(71) Applicants:
- Japan Absorbent Technology Institute
Chuo-ku, Tokyo 103-0007 (JP)
- MITSUBISHI CORPORATION
Chiyoda-ku, Tokyo 100-0005 (JP)

(72) Inventor: SUZUKI, Migaku,
c/o Japan Absorbent Tech. Inst.
Tokyo 103-0007 (JP)

(74) Representative: Gervasi, Gemma, Dr.
NOTARBARTOLO & GERVASI
Corso di Porta Vittoria, 9
20122 Milano (IT)

(54) LIQUID DISTRIBUTION UNIT AND ABSORBENT PRODUCT HAVING THE SAME

(57) A liquid distribution unit is contactively disposed directly on that surface of the liquid-permeable sheet positioned in the innermost with respect to a wearer of an absorbent product which is associated with wearer. The liquid distribution unit is provided with a plurality of liquid distribution passageways extending downward with respect to the surface thereof. The liquid distribution unit has the function of uniformly distributing and branching the liquid fed onto the surface thereof, through the liquid distribution passageways over a wide range along the surface of the surface sheet. An absorbent product having such distribution unit is provided.

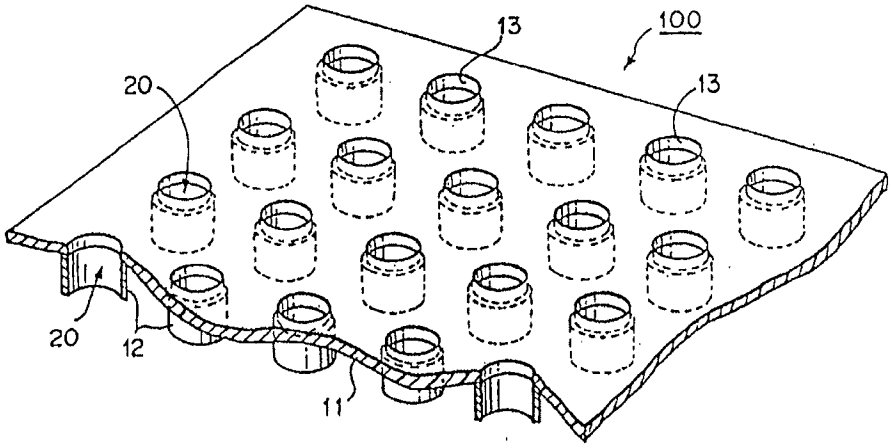

Fig. 1

EP 1 374 817 A1

Description

TECHNICAL FIELD

[0001] The present invention relates to a liquid distribution unit which is applied to absorbent articles such as diapers for infants and adults, sanitary items for women, and medical blood absorbents in order to improve capabilities of the absorbents. The present invention also relates to a method of manufacturing the liquid distribution unit.

BACKGROUND ART

[0002] Absorbent articles for broad use in general have been developed mainly for use in disposal of urine. These absorbent articles have been desired to be capable of handling changes caused by various factors such as a wearer's posture, intake condition of water, and physical condition, for example, wearing posture and changes of discharge states such as amount, quality and speed of discharged urine. To securely deal with these changes, an area and a volume sufficiently larger than necessary on usual use conditions need to be imparted to the absorbent articles. On the other hand, from a viewpoint of a wearer's comfort, the absorbent articles are preferably thinner and compacter.

[0003] Considering from an aspect of absorption efficiency, the absorbent articles, which have margins in this manner, have an absorbent with a remarkably bad efficiency, and are also undesirable from a viewpoint of the wearer's comfort. In order to improve area and volume efficiencies of the absorbent articles, it is important to form the absorbent itself to be as thin and compact as possible, and further to control the flow of discharged liquid. That is, a mechanism needs to be disposed in which the discharged liquid is guided to an intended/desired position of the absorbent and the discharged liquid is uniformly distributed over the whole surface of the absorbent. The absorbent of one of the absorbent articles cannot be formed to be thinner or compacter until these considerations are made, and there has been a demand for development of the absorbent articles which have these capabilities.

[0004] There have been a large number of proposals concerning the reduction of the size of the absorbent. For example, in Japanese Patent No. 3,090,266, there is disclosed an absorbent sheet containing three components including: an absorption layer mainly comprising super absorbent polymer particles; a nonwoven fabric substrate for supporting the super absorbent polymer particles; and a binder component for bonding the super absorbent polymer particles to one another and for bonding the super absorbent polymer particles to the nonwoven fabric substrate. The nonwoven fabric substrate is constituted of a nonwoven fabric which has a multilayered structure including a diffusion layer (P) formed of a fiber layer relatively high in hydrophilicity and high in density and an acquisition layer (Q) relatively low in hydrophilicity and low in density. On the surface of the absorbent sheet, an absorption region phase (phase A) including the absorption layer and the nonwoven fabric substrate carrying the absorption layer, and a diffusion/acquisition region phase (phase B) in which the super absorbent polymer particles hardly exist and which is mainly formed of only the non-woven substrate are distributed so that the phases can be distinguished from each other.

[0005] Moreover, in Japanese Patent Application Laid-Open No. 2000-232,985, there is described a disposable incontinence liner in which an absorption sheet is disposed between a top sheet and back sheet. For the absorption sheet, there is described an absorbent sheet including: an absorption layer in which polymeric absorbent particles are bonded by microfibrillated fine fibers; and a sheet support material for supporting this absorption layer. The polymeric absorbent particles having specific weights, and the absorbent sheet having specific thickness and rigidity/softness are used.

[0006] Further in Japanese Patent No. 2,872,851, there is disclosed an absorbent article including a surface material having permeability to liquid, an absorbent having liquid holding property, and a leak preventive material having impermeability to the liquid, A part or all of the absorbent is constituted of an absorption sheet in which polymeric absorbent particles are fixed to an absorption material by an adhesive applied in a dot, linear, or curve form. For the adhesive, a 180° peeling adhesive force (JIS C2107) is not less than 500 g and not more than 4000 g. An occupying area of the applied adhesive is not less than 10% and not more than 70%.

[0007] Moreover, a absorbent sheet in which polymeric absorbent particles are mixed in high concentration in a so-called air-laid method of molding a pulp sheet by a dry process and bonded/integrated by a heat-melting binder also starts to be used in an ultrathin absorbent article.

[0008] However, although the absorbent article using the above-described absorbent sheet is thin and compact as compared with the conventional article, further improvement is still necessary with respect to the efficiency.

[0009] Additionally, as a measure for efficiently absorbing the discharged liquid into the thin absorbent, a bulky nonwoven fabric has heretofore been added as a diffusion sheet, distribution sheet, transfer sheet, or acquisition sheet to the surface of the thin absorbent. These common ideas are based on the use of the diffusion phenomenon of the liquid using capillaries among the constituting fibers. An attempt has also been made to dispose a foam or bulky opening film subjected to a surface hydrophilic treatment for temporarily trapping the liquid between a top sheet and the absorbent or in the absorbent.

[0010] The present invention has been derived from an attempt to purely incorporate a mechanical liquid distribution mechanism which is disposed in contact with a discharge port of body fluid into the absorbent article.

DISCLOSURE OF THE INVENTION

[0011] An object of the present invention is to provide a distribution unit capable of distributing a liquid discharged from a wearer into the surface of an absorbent.

[0012] According to one aspect of the present invention, there is provided a liquid distribution unit disposed to keep in contact with the surface of a liquid permeable sheet of an absorbent article disposed in a contact position with respect to a wearer on the wearer's side.

[0013] The liquid distribution unit includes a plurality of liquid distribution passages in a hanging direction with respect to the surface of the unit, and the liquid distribution unit divides and branches finely the liquid supplied to the surface of the unit along the surface of the surface sheet.

[0014] The liquid distribution unit may include a plurality of openings, and introductory tubes extending toward the surface of an absorbent member from the openings, and may be formed so as to guide the liquid from the openings toward the surface of the absorbent member through the introductory tubes.

[0015] For each opening, preferably, when its opening surface is approximated to an ellipse, its long axis is at least 0.5 mm, its short axis is 10 mm at maximum, its open area ratio is not less than 10% and not more than 90%. The number of openings is preferably at least 200 openings per 100 cm^2.

[0016] The length of the introductory tube is preferably not less than 0.50 mm and not more than 5 mm.

[0017] The introductory tube forming a funnel shape, which has a large inlet diameter on its opening surface side and a small outlet diameter, is advantageous.

[0018] The liquid distribution unit can be constituted of a thermoplastic film having a thickness which is not less than 10 μm and not more than 100 μm.

[0019] For the liquid distribution unit, wettability may also be improved by treatment of the surface of the unit with a hydrophilic agent, and mobility of the liquid from the opening is improved in this case.

[0020] Moreover, the absorbent member includes a plurality of absorbent sheets laminated upon one another, and the liquid distribution unit may include a portion exposed onto the absorbent sheet positioned in a top layer, and a portion extending to reach the absorbent sheet positioned in a lower layer of the absorbent sheet of the top layer.

[0021] According to the present invention, there is further provided an absorbent article including the above-described liquid distribution unit. In this case, the absorbent article includes a liquid permeable surface sheet positioned on an inner side with respect to a wearer's body in a wearing state; a liquid impermeable sheet positioned on an outer side from the surface sheet; and an absorbent member containing super absorbent polymer particles as a major component disposed between the surface sheet and the liquid impermeable sheet. The liquid distribution unit is disposed between the body surface of the wearer and the absorbent member.

[0022] The absorbent member for use preferably contains at least 50% by weight or more of the super absorbent polymer particles.

[0023] A liquid permeable nonwoven fabric may further be disposed on the liquid distribution unit.

[0024] A ratio of an area occupied by the liquid distribution unit with respect to the total area of the surface sheet is preferably not less than 5% and not more than 50%, and the unit is partially disposed so as to have an area of at least 10 cm^2.

[0025] The liquid permeable nonwoven fabric may further be disposed only on the partially disposed liquid distribution unit.

[0026] Furthermore, an acquisition layer or diffusion layer may be disposed under the liquid distribution unit. In order to broadly distribute and diffuse the liquid in a surface part, a liquid impermeable sheet is sometimes disposed in the lower surface of the liquid distribution unit to partially block an outlet of the distribution unit.

[0027] The absorbent member constituted of the absorbent sheet including a nonwoven substrate, super absorbent polymer particles, and microfibrillated cellulose can be used.

[0028] Alternatively, the absorbent member may also be constituted of the absorbent sheet including a wood pulp obtained by a so-called air-laid method, super absorbent polymer particles, and bonding material.

[0029] The absorbent member has a retained absorption amount of 300 cc or more. When a water absorption speed is measured every 100 cc at an interval of ten minutes three times, the water absorption speed is 60 sec or less in any measurement, and a deviation among the three measurement data is suitably 30 sec or less.

[0030] Furthermore, the absorbent sheet has a bent shape whose transverse section has a Z-shape, the liquid distribution unit is disposed only in a center portion of the upper surface of the absorbent sheet, and the unit can be used in this mode.

BRIEF DESCRIPTION OF THE DRAWINGS

[0031]

FIG. 1 is a perspective view showing a cut part of a liquid distribution unit according to one embodiment of the present invention;
FIG. 2 is a vertical sectional view of a part of the liquid distribution unit shown in FIG. 1;
FIG. 3 is an explanatory view showing the principles of liquid distribution in the liquid distribution unit of the present invention;
FIG. 4 is an explanatory view showing a mechanism of liquid distribution occurring between the liquid distribution unit of the present invention and an absorbent disposed under the unit;
FIG. 5 is an enlarged view of a part shown by V of FIG. 4;
FIG. 6 is a perspective view showing a part of the liquid distribution unit according to another embodiment of the present invention;
FIG. 7 is a vertical sectional view showing a shape of a tube portion applied to the liquid distribution unit of the present invention;
FIG. 8 shows plan views showing different modes of liquid distribution unit arrangement of the present invention to be combined with an absorbent member;
FIG. 9 is a vertical sectional view schematically showing an absorbent part of an absorbent article according to the present invention including the liquid distribution unit;
FIG. 10 shows vertical sectional views schematically showing the absorbent parts of different conventional absorbent articles;
FIG. 11 is a vertical sectional view in a width direction, showing a constitution example of the absorbent member applied to the absorbent article of the present invention;
FIG. 12 is a vertical sectional view in a width direction, showing another constitution example of the absorbent member applied to the absorbent article of the present invention;
FIG. 13 shows plan views showing different bonding modes of a bonding portion for bonding the liquid distribution unit of the present invention with respect to the absorbent member;
FIG. 14 is a perspective view showing another mode of the absorbent combined with the liquid distribution unit of the present invention; and
FIG. 15 is a vertical sectional view of FIG. 14.

BEST MODE FOR CARRYING OUT THE INVENTION

[0032] A liquid distribution unit of the present invention will be described hereinafter in detail with reference to the drawings.

[0033] FIG. 1 is a model diagram showing one example of the liquid distribution unit according to the present invention. A liquid distribution unit 100 includes a liquid impermeable sheet 11 having a large number of openings, and a large number of tubular introductory tubes 12 extending in a direction hanging from the surface of the liquid impermeable sheet 11. To simplify the description, in FIG. 1, a large number of circular openings 13 are formed in the liquid impermeable sheet 11. The introductory tube 12 having an inner diameter substantially equal to a diameter of the opening 13 is disposed so that an axial center of the introductory tube 12 agrees with a center of the opening 13. In the corresponding position, the tube is connected to the lower surface of the liquid impermeable sheet 11. This opening 13 and a center hole of the introductory tube 12 form a liquid distribution passage 20.

[0034] FIG. 2 shows an enlarged sectional view of a part of the liquid distribution unit 100 shown in FIG. 1. In the figure, the thickness of the liquid impermeable sheet 11 is shown by t, the diameter of the opening 13 is shown by ϕ, and the length of the introductory tube 12 is shown by H.

[0035] A mechanism for distributing the liquid in the liquid distribution unit of the present invention will be described hereinafter.

[0036] In the present invention, as shown in FIG. 3, the term of "the distribution of the liquid" means a phenomenon in which a flow A of the liquid which has entered via an upper inlet is discharged as a plurality of mechanically divided flows A1, A2, A3, ... An in going out of lower outlets.

[0037] As shown in FIG. 4 and FIG. 5 showing a part of FIG. 4 in an enlarged size, when the divided flows A1 to An collide with the surface of an absorbent S, the flows are further divided into flows B1 and B2 ... Bn absorbed by the absorbent S and flows C1, C2 ... Cn overflowing to spaces P along the surface in accordance with flow amount and speed. The flow which overflows in the space P having a height H and width L formed in the liquid distribution unit 100 and the surface of the absorbent S is absorbed into the absorbent S with a flow shown by D1.

[0038] In this manner, the flow A is formed into the divided flows A1, A2 ... An, and is further multi-divided into B1,

B2 ... Bn, C1, C2 ... Cn, and D1, D2 ...Dn, and the finely divided flows are supplied into the absorbent S. As a result, the irregularly discharged liquid is formed into the controlled fine flow by a mechanical distribution effect, and rapidly spreads over the surface of the absorbent by the distribution effect. Only a part of the absorbent S is prevented from locally swelling, and it is possible to effectively use the whole surface of the absorbent S. To impart such a uniform surface diffusion effect is especially important for the absorbent containing super absorbent polymer (SAP) particles at a high ratio, which has characteristics that the thickness is small and capacity is large but absorption speed is low.

[0039] As clear from the above description, the following basic conditions are necessary for the liquid distribution unit of the present invention to fulfill the desired functions.

(1) To distribute the liquid, the distribution unit needs to have an ability to retain a certain liquid amount. For this, it is important to dispose a space having a height H and width L in an appropriate size in FIG. 5 between the liquid distribution unit and the surface of the surface sheet positioned under the unit.

(2) It is necessary to have an introduction function of moving the liquid from the opening to introduce the liquid into the absorbent surface.

(3) An isolating distance (corresponding to the length H of the introductory tube) for isolating the opening from the surface sheet is required.

(4) A space (P) needs to exist between the introductory tubes disposed adjacent to one another. For the space, in a structure in which there is not any introductory tube, for example, in a structure in which the opening is disposed in a thick sheet, this space is not generated, and therefore the function aimed of the present invention is not obtained. When the introductory tube becomes thinner and has a longer length (H), the space becomes larger.

(5) To maintain stability of the shape, that is, to obtain characteristics that the liquid distribution unit is not deformed or collapsed even under loads such as a wearer's weight, it is important that the liquid impermeable sheet for use in the liquid distribution unit has a certain degree of thickness. The thickness also depends on the material which constitutes the liquid impermeable sheet. However, it is desirable to have a thickness of at least 10 μm or more, more preferably 20 μm or more.

[0040] This will be described with reference to FIG. 2. When the transverse sectional shape of the introductory tube 12 is circular, the diameter ϕ indicates a value of 0.5 mm or more, preferably 1 mm to 10 mm, the length H is 0.5 mm or more, preferably 1 mm to 10 mm, and the thickness t of the liquid impermeable sheet is 10 μm or more, preferably 20 μm to 200 μm.

[0041] As the material constituting the liquid distribution unit, the material having an absorbing property entirely like the nonwoven fabric which has heretofore been used as an acquisition layer or diffusion layer is not therefore used in the liquid distribution unit according to the present invention because the material itself absorbs the liquid. The material itself may be impermeable to the liquid so that the liquid is retained as little as possible. On the other hand, a metal plate is satisfactory both in shape stability and distribution effect, but is excessively high in rigidity, and it is difficult to apply the metal plate to the absorbent article. The appropriate material, for example, is a thermoplastic film or a bonded material of the film with the nonwoven fabric. Examples of the material include: a single-layer film of a simple substance or a blend material of a thermoplastic synthetic resin such as PE, PP, PET, EVA, MA, MMA; a co-extrusion film such as PE/PP, PE/PET, low melting point PET/PET, and EVA/PE; and a bonded material of the single-layer film, co-extrusion film, and nonwoven fabric such as a spun bond nonwoven fabric, thermal bond nonwoven fabric, and tissue. The thickness of the film is 10 μm or more, and preferably 100 μm or less, because a problem occurs in moldability of the opening with an excessively large thickness. It is to be noted that in order to reduce the liquid remaining in the surface locally, a surface hydrophilic treatment is permitted for improvement of surface wettability, and is sometimes rather desirable to facilitate the movement of the liquid from the opening. For the hydrophilic agent, measures are taken such as the coating with an anionic, cationic, or nonionic surfactant and the mixing of the hydrophilic components such as PEG in a material polymer itself to impart hydrophilicity.

[0042] In order to industrially produce such a structure, for example, any of the following methods would preferably be used.

(1) A method of using a metal mold to extrude plastic resin directly from a molding machine and molding the distribution unit. In this method, it is necessary to form a smooth and flexible molded material without any protrusion or surface damage.

(2) A method of forming a concave/convex portion in a net formed of plastic filaments having a certain degree of rigidity by thermoforming. In this thermo-formed material, the concave portion functions as the opening, and the convex portion functions as the introductory tube. In this case, the net needs to have a mesh size to such a degree that the liquid can sufficiently pass through the net. For example, the size is preferably 40 meshes to 100 meshes.

(3) A method of forming a deep dent in a liquid impermeable plastic film by thermoforming and opening the bottom of the dent mechanically or further by a heat treatment.

(4) A method of forming a deep embossed groove in a plastic film and heating and vertically/laterally drawing the film to produce an opening in the bottom of the groove.

(5) A method of guiding a plastic film in a heated state into a porous surface cylinder whose inner pressure is reduced, applying heat air to the film to suck the film, and forming an opening in accordance with the pore size of the cylinder to obtain a molded material to which the introductory tube is also formed in accordance with the thickness of the porous cylinder.

[0043] The shape of the opening and arrangement example of the liquid distribution unit obtained in the above method (4) or (5) are shown in FIG. 6.

[0044] In order to effectively perform the fine division of the liquid, it is important to appropriately control the state of the opening which is the inlet of the liquid.

[0045] The opening state is represented by the opening shape, the number of openings, opening ratio (open area ratio), and the like.

[0046] The opening shape may be any of circular, elliptic, square, rectangular, quadrangular, and hexagonal shapes. However, when the size of the opening is excessively small, the movement efficiency of the liquid is bad. Conversely, when the size is excessively large, a liquid division effect worsens.

[0047] When the opening shape is approximated to an elliptic shape and its long axis is less than 0.5 mm, surface tension acts, and the passage of the liquid is inhibited. A preferable long axis size is not less than 1.0 mm. On the other hand, when the size is excessively large, a passing property of the liquid becomes satisfactory, but the division effect worsens, and therefore the short axis size is 10 mm at maximum, preferably 5 mm at maximum.

[0048] The number of openings also largely influences the division effect. When the number of openings per unit area is small, it is necessary to have a large opening area of each opening, and the division efficiency worsens for the above-described reason. Therefore, the number of openings is at least 200 per 100 cm^2, preferably at least 500 per 100 cm^2.

[0049] The area of openings represents an open area ratio at a time when the total area of the distribution unit is assumed to be 100. Zero % indicates that there is not any opening. The open area ratio is preferably 10% or more, more preferably 90% or less. When the open area ratio is less than 10%, the movement speed of the liquid is excessively low. When the open area ratio exceeds 90%, the shape stability of the liquid distribution unit becomes worse, and so the open area ratio is preferably in a range of 20% to 80%.

[0050] In the above description, there is also a cylindrical introductory tube having a circular transverse section, but in the present invention, an introductory tube having a shape other than the cylindrical shape can be applied. Some examples are shown in FIGS. 7(A), 7(B), 7(C). An introductory tube 12a shown in FIG. 7(A) has a truncated conical shape whose end being in contact with the opening of the liquid impermeable sheet 11 has a small diameter and which successively enlarges toward an end on a distant side. An introductory tube 12b shown in FIG. 7(B) has a shape vertically reverse to that of the introductory tube 12a of FIG. 7(A). Furthermore, an introductory tube 12c shown in FIG. 7(C) has a cylindrical shape having an equal diameter down to a position corresponding to approximately the half of the length from an upper end, a lower connected portion has a truncated conical shape, a conical insert 12d is disposed in a truncated conical space, and the liquid passage in this portion is annular.

[0051] It is possible to apply introductory tubes having various shapes, but in many cases the shape of FIG. 7(B) is preferred because the shape has advantages that the tube is easily formed and there is little reverse flow of the liquid.

[0052] The length (H) of the introductory tube is an important factor for determining the capacity of the passage. The longer tube is preferred but becomes thick. It is therefore necessary to adequately select the length. The length (H) is preferably not less than 0.5 mm and not more than 10 mm, and further preferably 1.0 mm to 5 mm.

[0053] The liquid distribution unit of the present invention is attached to the absorbent article so as to cover all or part of the surface of the absorbent disposed closely to a wearer's skin (hereinafter referred to as the "upper surface"). In many absorbent articles, the upper surface of the absorbent is covered with a liquid permeable sheet (i.e., the top sheet) obtained by hydrophilic-treatment of a nonwoven fabric containing synthetic fibers such as PE, PP, PET which are major components. The liquid distribution unit of the present invention is preferably disposed on the surface sheet, that is, an outermost surface. When the top sheet is not disposed and the acquisition layer is disposed in the outermost surface, the unit is disposed on the acquisition layer. In the case of using an absorbent sheet composed of a substrate and super absorbent polymer particles, the substrate sometimes has a top sheet or acquisition effect. In this case, the liquid distribution unit is disposed so as to directly come in contact with the absorbent sheet. However, when the surface sheet is closely attached or bonded to the liquid distribution unit by an appropriate measure, and even when the unit is disposed right under the surface sheet, the unit is disposed substantially in the vicinity of the skin, and this is therefore included in the scope of the present invention.

[0054] The liquid distribution unit of the present invention has a function of controlling the distribution of body fluid, and therefore needs to be disposed in the vicinity of a body fluid discharge port, but the area, which can sufficiently cover the discharge port portion, is sufficient. It is unnecessary to cover all the large area of the absorbent member.

When the absorbent member entirely covered with the surface sheet is assumed, the covering of the half (50%) of the surface sheet at maximum is sufficiently enough for the necessary area of the liquid distribution unit. Also considering from economy of the article, the area, which is not less than this size, is totally useless. However, the area needs to be about at least 3%, and a concretely necessary area of the absorbent article would be 10 cm^2 or more.

[0055] In this manner, since the liquid distribution unit needs to come in contact with the discharged body fluid as directly as possible, it is important to dispose the unit in the vicinity of the body fluid discharge port. Therefore, it is also necessary to change the disposed position in accordance with uses for men, women, adults, and children depending on the circumstances.

[0056] Table 1 shows a result of a test for measuring a change of an absorption speed with respect to an occupied area of the liquid distribution unit on the outermost surface. We adopted as the distribution unit an opening film (trade name "X-27373", thickness of 1184 μm) manufactured by Tredegar Co. 100 ml of a physiological salt solution was supplied via a nozzle having a nozzle diameter of 2 mm, and absorption time was measured to carry out the test. While a positional relation between the liquid distribution unit and absorbent member was set as shown in FIG. 9 described later, an experiment was carried out. It is seen from the result of Table 1 that a system not including the distribution unit requires 170 sec, while the absorption time is reduced to about 1/5 or less in a system including the distribution unit. When the occupied area is not less than 20 cm^2 as the cover area of the liquid distribution unit, the absorption speed is seen to be hardly influenced. It is to be noted that a discharge speed of urine by a healthy baby or adult is 60 sec or less per 100 ml. When the absorbent article is considered, for the whole absorption ability, in terms of a retention amount (retained absorption amount), the article is generally designed to have a retained absorption amount of 300 ml or more. It is also important to reduce the absorption speed to 60 sec or less, preferably 40 sec or less per 100 ml.

[0057] This experiment result is a proof indicating that the distribution unit of the present invention is based on a physical mechanism which is different from the so-called acquisition effect. The degree of aquisition effect becomes nearly proportional to the occupied area.

Table 1

Occupied Area and Absorption Speed of Distribution Unit						
	Control	Exp.1	Exp.2	Exp.3	Exp.4	Exp.5
Area of liquid distribution unit (cm^2)	0	10	20	40	100	350
Occupying ratio in total surface area of absorbent member (%)	0	2.9	5.7	11.4	35	100
Absorption speed of 100 ml artificial urine (sec)	170	35	28	30	29	30

[0058] In the present invention, with the use of a liquid distribution unit having an area only covering only a part of the total surface of the surface sheet of the absorbent, its plane shape changes in accordance with a targeted capability, or various conditions of a use mode. Some shapes are shown in FIGS. 8(A) to 8(E). In these figures, reference numeral 30 denotes the absorbent member of the absorbent article, and the liquid distribution unit 100 of the present invention is disposed on the top sheet. The liquid distribution unit 100 has a vertically long rectangular shape in the example of FIG. 8(A), and has a laterally long rectangular shape in the example of FIG. 8(B). The liquid distribution unit 100 may have various shapes such as an elliptic shape as shown in FIG. 8(C), a triangular shape as shown in FIG. 8(D), and a convex shape as shown in FIG. 8(E).

[0059] The absorbent part of the absorbent article including the liquid distribution unit of the present invention basically includes the absorbent member, and the liquid distribution unit disposed on the absorbent member. The absorbent member may also include a usual structure constituted of a laminate material of super absorbent polymer particles and pulp, and a cover sheet with which the laminate material is covered, but preferably has a large content of super absorbent polymer particles. The absorbent member is preferably a pulp-less ultrathin absorbent sheet including a support sheet and an absorbent layer supported on the surface of the support sheet and containing the super absorbent polymer particles as a major component. The major component indicates an occupying state of 50% or more, preferably 60 to 90% of the total component weight involved in the absorption.

[0060] FIG. 9 shows the structure of an absorbent part in an absorbent article including an absorbent member 40 and liquid distribution unit 100. For the sake of simplicity, other accessory elements such as a back sheet and bonding unit are omitted. In this embodiment, in the absorbent member 40, there are disposed: a first absorbent sheet 43 including a liquid permeable support sheet 41 and strip-shaped absorption layers 42 disposed in parallel with one another on the lower surface of the support sheet; and a second absorbent sheet 46 which is disposed under the first absorbent sheet and which includes a layer of super absorbent polymer particles 45 on the lower surface of a support sheet 44. The absorbent member 40 includes a top sheet 47 disposed on the first absorbent sheet 43, and the liquid

distribution unit 100 is disposed on the top sheet.

[0061] The liquid distribution unit 100 has an about 50 cm^2 rectangular shape whose area is largely smaller than an area of 300 cm^2 of the absorbent member 40, and is disposed substantially in a center part of the absorbent member 40 as shown in FIG. 8(A).

[0062] A test was carried out to compare an absorption capability of the absorbent article including the liquid distribution unit of the present invention as shown in FIG. 9 with that of three types of control samples. The result is shown in the following Table 2.

[0063] The structures of comparative samples are shown in FIGS. 10(A), 10(B), and 10(C). Sample No. 1 has a structure of FIG. 10(A) excluding the liquid distribution unit 100 from the absorbent article of the present invention; sample No. 2 includes a structure of FIG. 10(B) in which instead of the liquid distribution unit 100, an acquisition layer 110 formed of an air-laid nonwoven fabric is disposed between the top sheet 47 and absorbent member 40; and sample No. 3 includes a structure of FIG. 10(C) in which instead of the liquid distribution unit 100, an acquisition layer 120 formed of a thermal bond nonwoven fabric is disposed over the whole surface between the top sheet 47 and absorbent member 40.

Table 2

Comparison of Absorption Speeds

	Comparative sample No. 1		Comparative sample No. 2		Comparative sample No. 3		Present invention		
	First absorp-tion	Second absorp-tion	First absorp-tion	Second absorp-tion	First absorption	Second absorp-tion	First absorp-tion	Second absorp-tion	Third absorp-tion
Weights of liquid distribution unit or acquisition layer (g/cm^2)	-	-	100	100	50	50	38	38	38
Thickness of liquid distribution unit or acquisition layer (mm)	-	-	1	1	0.6	0.6	1	1	1
Thickness of absorbent member (mm)	0.6	0.6	1.7	1.7	1.5	1.5	0.6	0.6	.06
Relative ratio of total thickness (%) (on basis of sample No. 3)	40	40	113	113	100 (Standard)	100	47	47	47
Open area ratio (%)	-	-	-	-	-	-	30	30	30
Number of openings of liquid distribution unit (Openings/100 cm^2)	-	-	-	-	-	-	1400 open-ings	1400 open-ings	1400 open-ings
Use area of liquid distribution unit (cm^2)	-	-	-	-	-	-	50	50	50
Absorption speed (Absorption time of 100 ml/sec)	150	200	22	45	25	55	20	25	24
Total absorption volume (ml)	100	200	100	200	100	200	100	200	300

[0064] Although the liquid distribution unit of the present invention has a small installation area of 50 cm^2, it is seen that an absorption speed promotion effect equal to or more than that of the conventional acquisition material disposed over the entire surface is provided. Especially when the measurement is repeated twice, three times, the absorption speed largely drops in the conventional constitution. However, it is seen that with the use of the liquid distribution unit of the present invention, the speed is nearly the same even in the third absorption.

[0065] From the above test result, for the absorbent article including the liquid distribution unit of the present invention, while the absorption capability is enhanced, it is possible to largely reduce the entire thickness.

[0066] FIG. 11 is a vertical sectional view in a width direction showing a structure of the absorbent member 40 according to another example applied to the absorbent article of the present invention. For the sake of simplicity, the other accessory elements such as the back sheet and bonding unit of the absorbent article are omitted. In this example, a first absorbent sheet 43 includes a liquid permeable support sheet 41 and strip-shaped absorption layers 42 disposed in parallel with one another on the lower surface of the support sheet. Under this first absorbent sheet, a second absorbent sheet 46 is disposed including a layer of super absorbent polymer particles 45 disposed on the lower surface of the support sheet 44. The first absorbent sheet 43 is wider than the second absorbent sheet 46, and opposite side portions extending outwards from opposite edges of the second absorbent sheet 46 have a shape bent so as to have a Z-shaped transverse section. Moreover, the liquid distribution unit is disposed on the first absorbent sheet 43 in the middle part of the absorbent member 40 in the width direction.

[0067] In this constitution, the liquid supplied to the absorbent member 40 from above is branched/distributed by the liquid distribution unit 100, rapidly absorbed in a broad region in the surface of the first absorbent sheet 43, and further absorbed by the second absorbent sheet 46. The Z-shaped portion disposed on the side of the first absorbent sheet swells and rises in response to the absorption, and also has a function of a side bank for preventing sideward leak.

[0068] Furthermore, FIG. 12 shows a constitution in which the first absorbent sheet 43 includes an elongated middle portion 43a and a pair of elongated side portions 43b positioned on opposite sides of the middle portion. These portions are disposed on the second absorbent sheet 46, and further the liquid distribution unit 100 is combined with them. In this example, the liquid distribution unit 100 has a width substantially equal to that of the absorbent member 40, and is positioned on the first absorbent sheet 43a in the middle part of the width direction, but the opposite side portions of the unit extend between the first absorbent sheet 43a and the second absorbent sheets 43b and are disposed under the second absorbent sheets 43b. It is to be noted that, in this example, the top sheet 47 is disposed on the liquid distribution unit 100.

[0069] In this constitution, the liquid supplied to the absorbent member 40 from above is branched/distributed by the liquid distribution unit 100, rapidly absorbed in the newly whole region in the surface of the first absorbent sheet 43, further guided under the second absorbent sheets 43b by the liquid distribution unit 100, and further substantially simultaneously absorbed by the second absorbent sheet 46. Therefore, the unit is suitable especially for the absorbent structures such as diapers for children which deal with a large amount of liquid in a short time. It is to be noted that the lateral width of the distribution unit needs to be broadened, but the vertical width may be narrow.

[0070] The mode in which the liquid distribution unit is bonded to the top sheet and/or directly to the absorbent is important because the division effect of the liquid is influenced. For example, the entire bonding of the unit by hot melt and the closing of distribution outlets have to be avoided. FIGS. 13(A), 13(B), 13(C), and 13(D) show examples in which the substantially rectangular liquid distribution unit 100 is bonded to the surface sheet of the absorbent member 30 in different portions. The unit is bonded by a bonding portion 101 over the entire four sides of the liquid distribution unit 100 in a sample S-1 as shown in FIG. 13(A), but the unit is bonded only in two long sides of the liquid distribution unit 100 in a sample S-2 as shown in FIG. 13(B), the unit is bonded in only two short sides of the liquid distribution unit 100 in a sample S-3 as shown in FIG. 13(C), and the unit is bonded in the bonding portions 101 only in four corner portions in a sample S-4 as shown in FIG. 13(D).

[0071] A test was carried out to check an influence of differences of these bonded states onto the absorption capability of the absorbent. The experiment was carried out by measurement of the absorption time of 100 ml of liquid with respect to each sample in a method similar to the above-described method, and the result is shown in Table 3.

Table 3

Fixing Method of Distribution Unit and Absorption Time of Liquid				
Sample	S-1	S-2	S-3	S-4
Absorption speed (sec)	58	42	38	30

[0072] For the sample S-1 bonded in all the four sides, even when the liquid was distributed, the distribution effect in the longitudinal and lateral directions remained only in the distribution unit area. Subsequently, the effect shifted inwards from the surface of the absorbent member 30. Therefore, the absorption required 58 seconds. For the S-4

partially fixed only in four corners, there were outlets in four directions, and therefore the liquid also diffused to the outside of the distribution unit in the longitudinal and lateral directions. The absorption ended in 30 seconds. Needless to say, when the liquid distribution unit was not used, the absorption required 150 sec to 180 sec. Therefore, even when the liquid distribution unit is bonded in all edges, the installation effect of the unit is large. However, attentions need to be paid to the change of the capability even with a fixing mode. Moreover, even when the liquid shift of the absorbent surface is controlled in the lower surface outlet of the liquid distribution unit, the surface diffusion state can be changed. That is, when the lower surface of the distribution unit is partially blocked by the liquid impermeable sheet, the absorption portion of the absorbent may be changed.

[0073] FIG. 14 is a perspective view and FIG. 15 is a vertical section view. They show an example of the 100 mm × 100 mm liquid distribution unit 100 laid on a 160 mm × 250 mm absorbent member 30. In the unit, only a 50 mm × 80 mm portion in the middle part is covered with a liquid impermeable sheet 50 formed of a PE film having a thickness of 30 μm, and the transfer of liquid into the absorbent member 30 is blocked in the portion. Accordingly, the liquid diffuses more broadly and speedily in the surface and is absorbed by the absorbent member 30 so that the whole absorbent is uniformly used.

[0074] In examples of FIGS. 14 and 15, a liquid impermeable sheet 50 of PE film is combined to the lower surface of a liquid distribution unit 100 by an adhesive, but may also be bonded on the side of an absorbent 30 or to the surface sheet (not shown). For the liquid impermeable sheet 50 for partially blocking the outlets of the liquid distribution unit, a film of as PE, PP, nylon, or PET, a water-resistant nonwoven fabric such as SMS, or a water-soluble PVA film, which temporarily has resistance to water but is melted away, is prepared in an appropriate area and shape in accordance with the area of the liquid distribution unit 100, and combined in an appropriate position. Accordingly, the transfer direction and state of the flow of the liquid which goes out can freely be controlled.

[0075] As described above, in the liquid distribution unit of the present invention, the body fluid irregularly discharged in the surface of the unit is divided and branched finely, along the surface of the surface sheet of the absorbent positioned below the unit by the mechanical distribution effect by a large number of liquid distribution passages. Accordingly, the liquid forms a controlled fine flow and rapidly spreads over the absorbent surface, only a part of the absorbent is prevented from locally absorbing/swelling, and the absorption capability of the absorbent can effectively be used.

[0076] Furthermore, in the absorbent article of the present invention including the above-described liquid distribution unit, the absorption capability of the used absorbent is fulfilled at the maximum to realize the enhancement of the capability of the absorbent article.

INDUSTRIAL APPLICABILITY

[0077] Liquid distribution units of the present invention improve absorption capabilities of absorbent articles such as diapers for infants and adults, sanitary items for women, and medical blood absorbents. Therefore these absorbent articles are produced in large amounts and are broadly used.

Claims

1. A liquid distribution unit disposed in a position between an absorbent member containing super absorbent polymer particles as a major component and a wearer's body,

   said liquid distribution unit comprising a plurality of liquid distribution passages which extend in a hanging direction with respect to the surface of the unit and whose ends are in contact with the absorbent member, and having a function of branching a liquid supplied to the surface along the surface of the absorbent member through each of the liquid distribution passages and accordingly of dividing and distributing the liquid along the surface of the absorbent member.

2. The liquid distribution unit according to claim 1, wherein said liquid distribution passages comprise a plurality of openings; and introductory tubes extending toward the surface of the absorbent member from each of the openings, and further having a function of guiding the liquid which has flown from each of the openings through these introductory tubes toward the surface of the absorbent member.

3. The liquid distribution unit according to claim 2, wherein each of the openings approximated to an ellipse has a short diameter of at least 0.5 mm and a long diameter of 10 mm at maximum, the open area ratio of the openings is in a range of 10% to 90%, and the number of the openings is at least 200 per 100 cm^2.

4. The liquid distribution unit according to claim 2 or 3, wherein each of the introductory tubes has a funnel shape with an outlet diameter smaller than an inlet diameter.

5. The liquid distribution unit according to any one of claims 2 to 4, wherein the length of each of the introductory tubes is in a range of 0.50 mm to 10 mm.

6. The liquid distribution unit according to any one of claims 1 to 5, which is constituted of a thermoplastic film having a thickness in a range of 10 μm to 100 μm.

7. The liquid distribution unit according to any one of claims 2 to 6, which is improved in surface wettability by treatment of the surface of the liquid distribution unit with a hydrophilic agent, and accordingly is improved in mobility of the liquid from each of the openings.

8. The liquid distribution unit according to any one of claims 1 to 7, wherein the absorbent member comprises a plurality of absorbent sheets laminated upon one another, and the liquid distribution unit includes a portion exposed onto the surface of a top layer of the laminated absorbent sheets, and a portion extending to reach an absorbent sheet positioned in a lower layer under the top layer of the laminated absorbent sheets.

9. An absorbent article comprising an absorbent including a liquid permeable surface sheet positioned on an inner side with respect to a wearer's body in a wearing state; a liquid impermeable sheet positioned on an outer side from the surface sheet; and an absorbent member containing super absorbent polymer particles as a major component disposed between the surface sheet and the liquid impermeable sheet, wherein the liquid distribution unit according to any one of claims 1 to 7 is disposed in a position between the wearer and the absorbent member.

10. The absorbent article according to claim 9, wherein the absorbent member contains at least 50% by weight of the super absorbent polymer particles.

11. The absorbent article according to claim 9 or 10, further comprising a liquid permeable nonwoven fabric further disposed on the liquid distribution unit.

12. The absorbent article according to any one of claims 9 to 11, wherein the liquid distribution unit has an area of at least 10 cm^2, the area is selected such that the ratio of the area to the total area of the surface sheet is in a range of 5% to 50%, and accordingly the liquid distribution unit is disposed so as to partially cover the surface sheet.

13. The absorbent article according to any one of claims 9 to 12, wherein the liquid distribution unit is partially disposed only in a part of the surface of the surface sheet, and a liquid permeable nonwoven fabric is disposed only on the liquid distribution unit.

14. The absorbent article according to any one of claims 9 to 13, further comprising an acquisition layer disposed under the liquid distribution unit.

15. The absorbent article according to any one of claims 9 to 13, further comprising a diffusion layer disposed under the liquid distribution unit.

16. The absorbent article according to any one of claims 9 to 13 further comprising a liquid impermeable sheet disposed under the liquid distribution unit in order to partially block movement of the liquid into the absorbent member.

17. The absorbent article according to any one of claims 9 to 16, wherein the absorbent member has a retained absorption amount of 300 cc or more, a water absorption speed of 60 sec or less in each of three measurements of the absorption speed performed every 100 cc at an interval of ten minutes, and a deviation of 30 sec or less among the three measurements.

18. The absorbent article according to any one of claims 9 to 17, wherein the absorbent member is constituted of a absorbent sheet including any of a nonwoven substrate, super absorbent polymer particles, and a microfibrillated cellulose.

19. The absorbent article according to any one of claims 9 to 17, wherein the absorbent member is constituted of a absorbent sheet selected from the group consisting of a wood pulp obtained by an air-laid method, super absorbent polymer particles, and a binder.

20. The absorbent article according to claim 18 or 19, wherein the absorbent sheet has such a shape that opposite

side portions are bent to have a Z-shaped transverse section, and the liquid distribution unit is disposed only in a center portion of the top surface of the absorbent sheet.

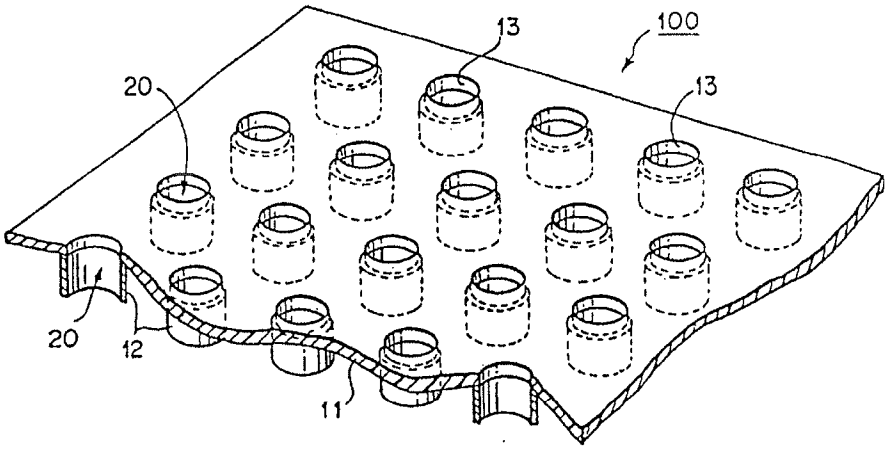

Fig. 1

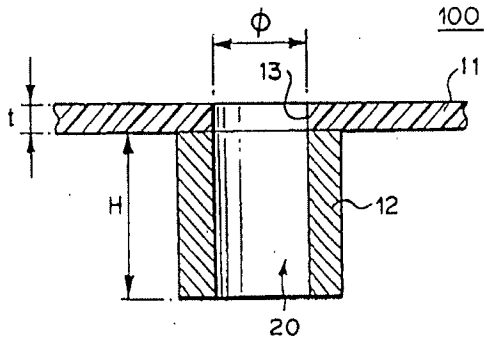

Fig. 2

Fig. 3

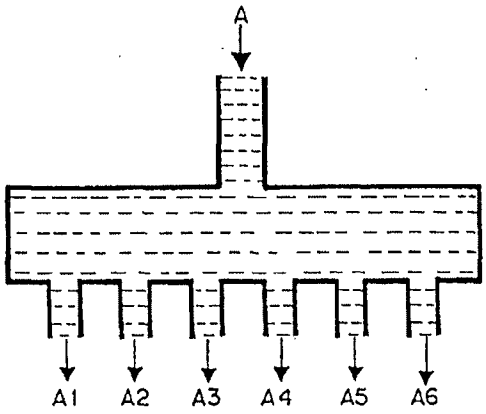

Fig. 4

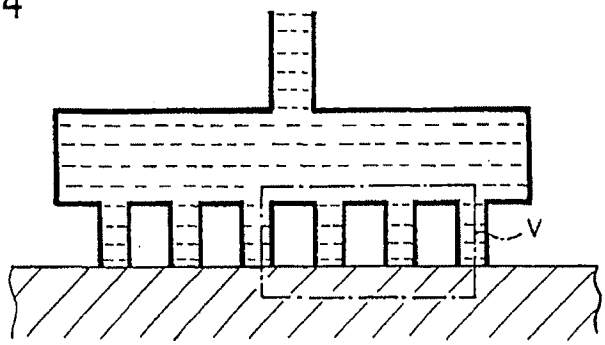

Fig. 5

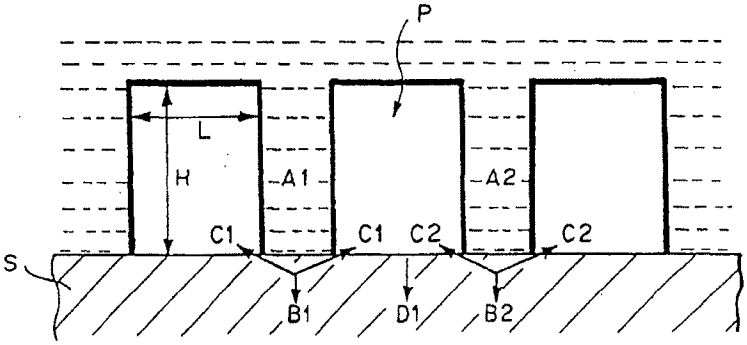

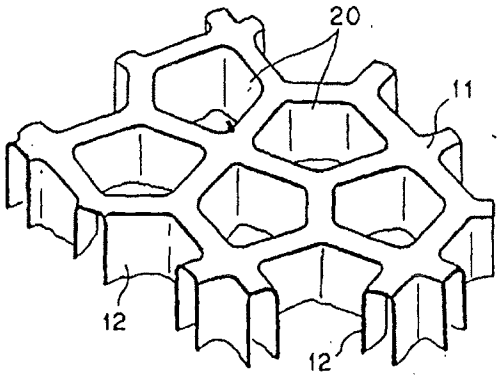

Fig. 6

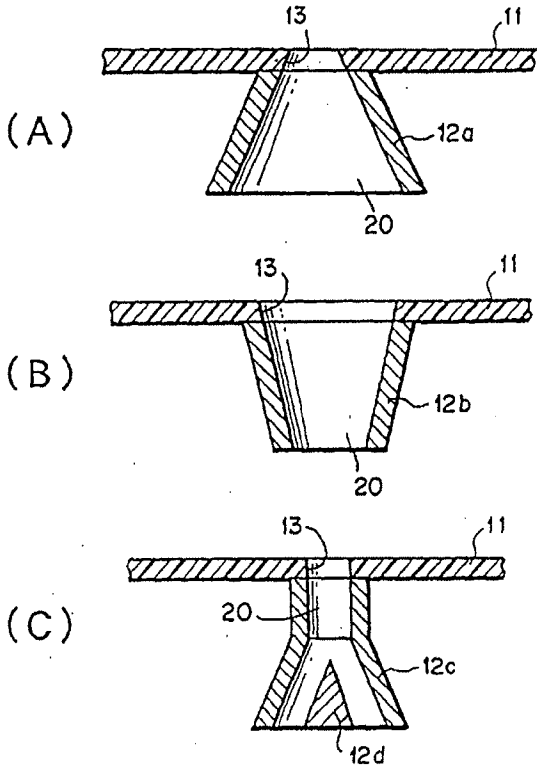

Fig. 7

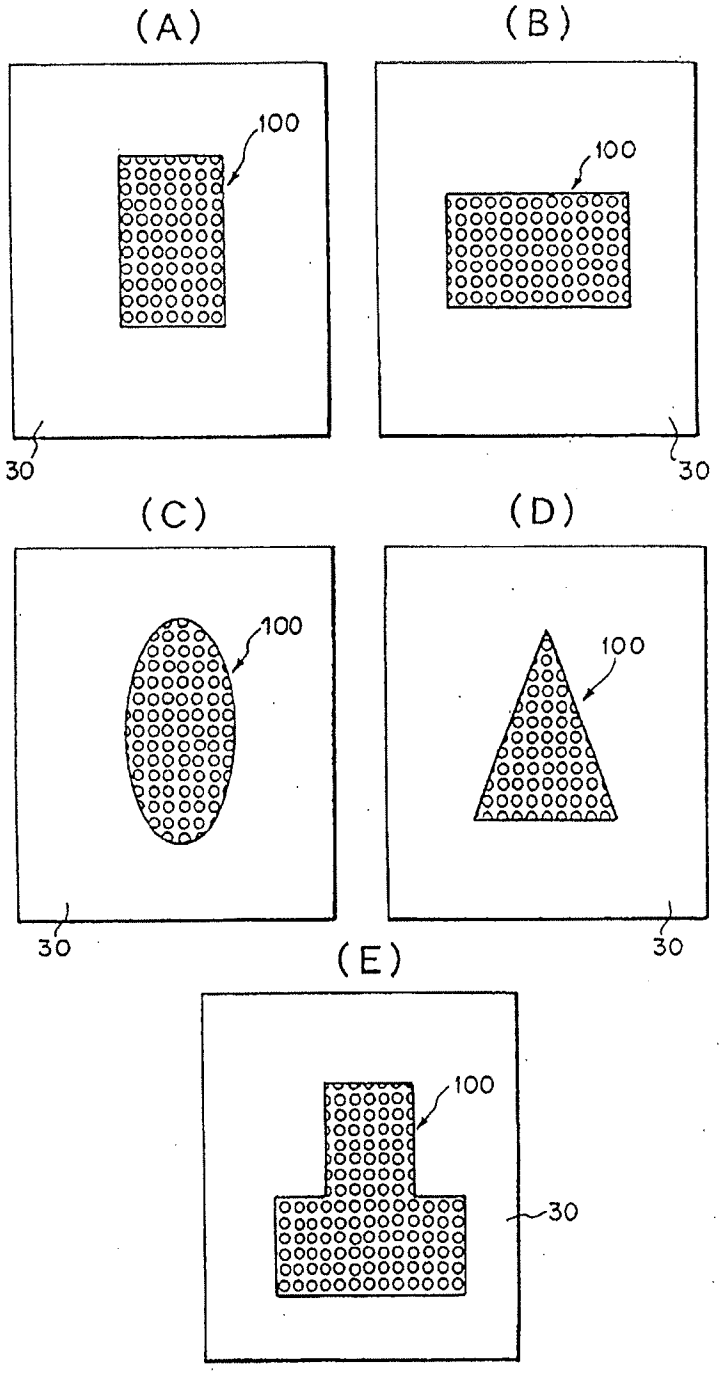

Fig. 8

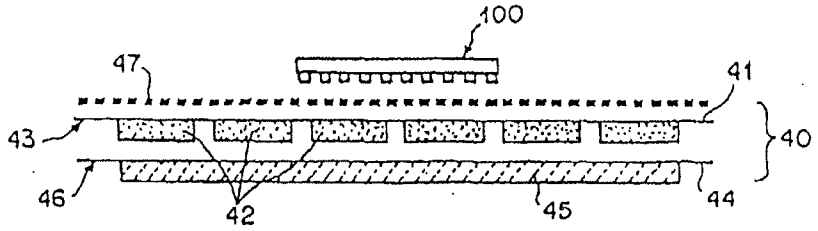
100
47
41
43
40
46
42
45
44

Fig. 9

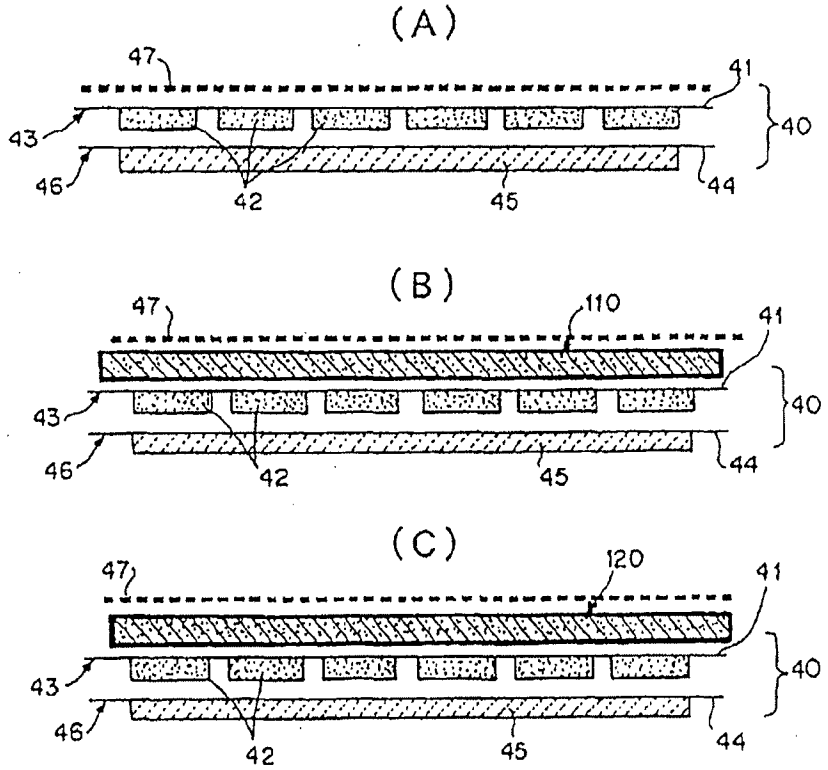
(A)
47
41
43
40
46
42
45
44
(B)
47
110
41
43
40
46
42
45
44
(C)
47
120
41
43
40
46
42
45
44

Fig. 10

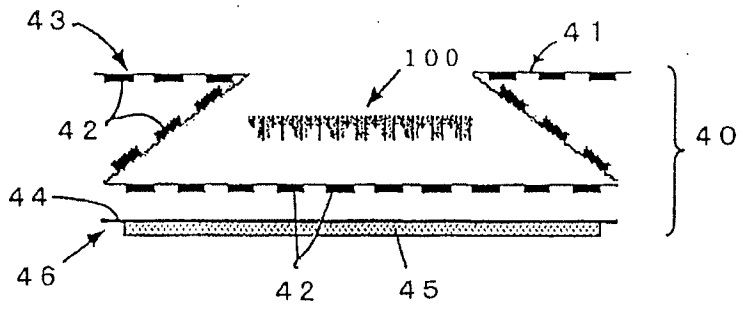

Fig. 11

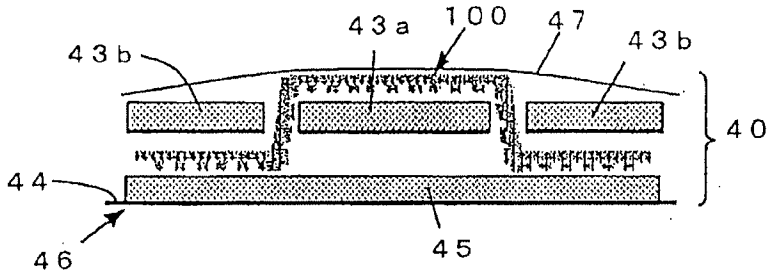

Fig. 12

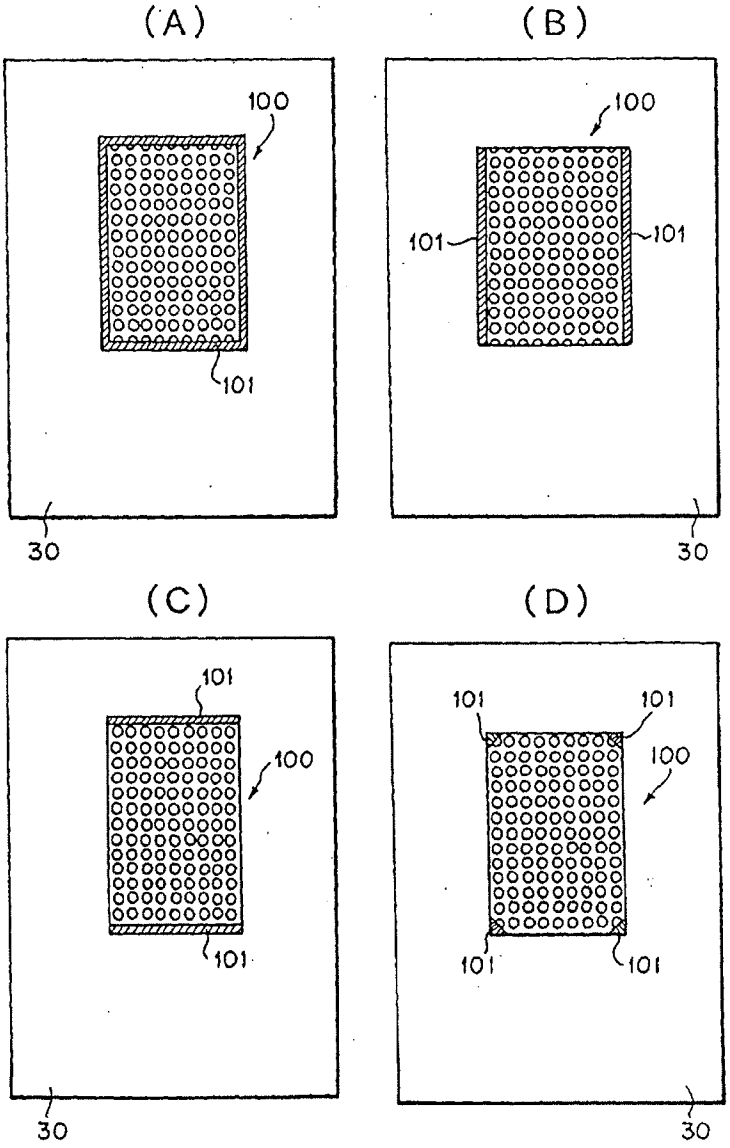
(A)
100
101
30
(B)
100
101
101
30
(C)
101
100
101
30
(D)
101
101
100
101
101
30

Fig. 13

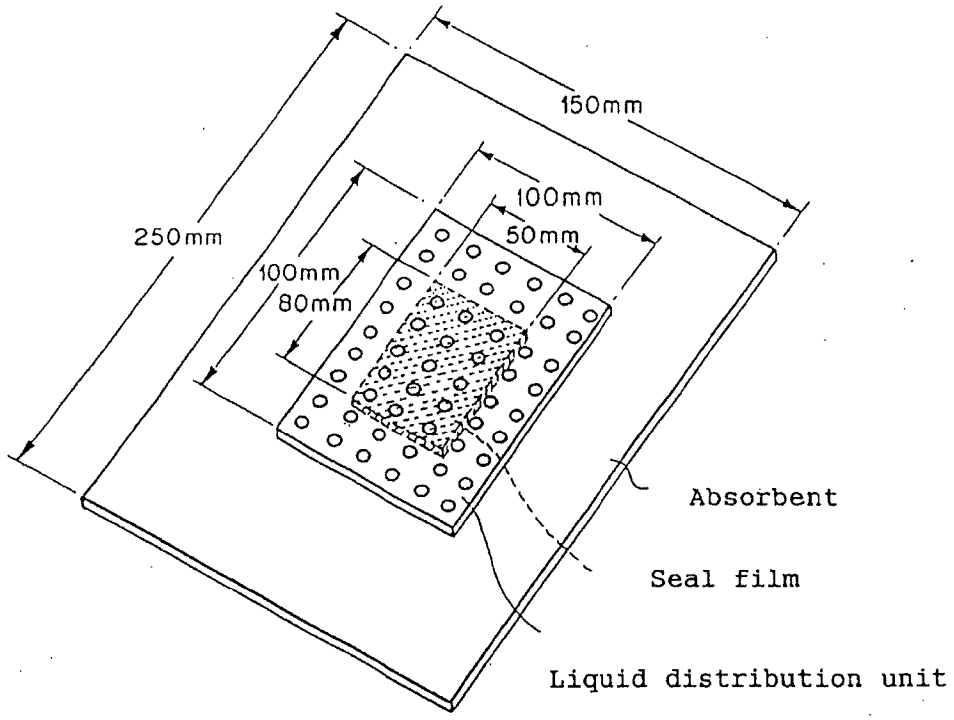
150mm
100mm
50mm
250mm
100mm
80mm
Absorbent
Seal film
Liquid distribution unit

Fig. 14

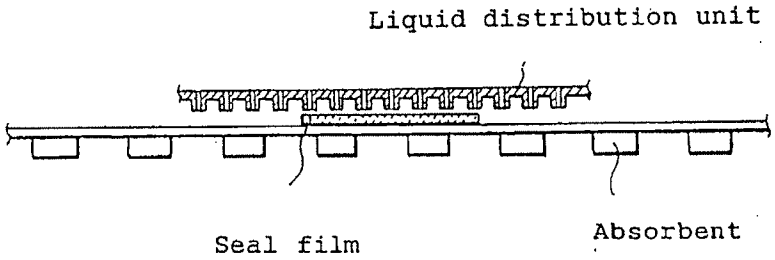
Liquid distribution unit
Seal film
Absorbent

Fig. 15

INTERNATIONAL SEARCH REPORT

International application No.
PCT/JP02/01419

A. CLASSIFICATION OF SUBJECT MATTER
Int.Cl[7] A61F13/537

According to International Patent Classification (IPC) or to both national classification and IPC

B. FIELDS SEARCHED

Minimum documentation searched (classification system followed by classification symbols)
Int.Cl[7] A61F13/15-13/539

Documentation searched other than minimum documentation to the extent that such documents are included in the fields searched

Jitsuyo Shinan Koho	1926-1996	Jitsuyo Shinan Toroku Koho	1996-2002
Kokai Jitsuyo Shinan Koho	1971-2002	Toroku Jitsuyo Shinan Koho	1994-2002

Electronic data base consulted during the international search (name of data base and, where practicable, search terms used)

C. DOCUMENTS CONSIDERED TO BE RELEVANT

Category*	Citation of document, with indication, where appropriate, of the relevant passages	Relevant to claim No.
X Y A	JP 9-299402 A (Kuraray Co., Ltd.), 25 November, 1997 (25.11.97), Full text (Family: none)	1-11,15,18-19 12-14,16 17,20
X Y A	JP 7-502433 A (The Proctor and Gamble Co.), 16 March, 1995 (16.03.95), Full text & WO 93/11726 A1 & EP 617601 A1 & US 5558657 A	1-2,6-11, 18-20 12-14,16 3-5,15,17
X Y A	JP 5-237149 A (Kimberly-Clark.Corp.), 17 September, 1993 (17.09.93), Full text & EP 523683 A1 & US 5961505 A	1-2 12 3-11,13-20
Y	JP 60-36048 A (E.R.Squibb & Sons,Inc.), 25 February, 1985 (25.02.85), Full text & EP 140476 A2 & US 4592751 A	13

[X] Further documents are listed in the continuation of Box C. [ ] See patent family annex.

* Special categories of cited documents:
"A" document defining the general state of the art which is not considered to be of particular relevance
"E" earlier document but published on or after the international filing date
"L" document which may throw doubts on priority claim(s) or which is cited to establish the publication date of another citation or other special reason (as specified)
"O" document referring to an oral disclosure, use, exhibition or other means
"P" document published prior to the international filing date but later than the priority date claimed
"T" later document published after the international filing date or priority date and not in conflict with the application but cited to understand the principle or theory underlying the invention
"X" document of particular relevance; the claimed invention cannot be considered novel or cannot be considered to involve an inventive step when the document is taken alone
"Y" document of particular relevance; the claimed invention cannot be considered to involve an inventive step when the document is combined with one or more other such documents, such combination being obvious to a person skilled in the art
"&" document member of the same patent family

Date of the actual completion of the international search 12 April, 2002 (12.04.02)	Date of mailing of the international search report 23 April, 2002 (23.04.02)
Name and mailing address of the ISA/ Japanese Patent Office Facsimile No.	Authorized officer Telephone No.

Form PCT/ISA/210 (second sheet) (July 1998)

INTERNATIONAL SEARCH REPORT

International application No.
PCT/JP02/01419

C (Continuation). DOCUMENTS CONSIDERED TO BE RELEVANT

Category*	Citation of document, with indication, where appropriate, of the relevant passages	Relevant to claim No.
Y	JP 11-513927 A (The Proctor and Gamble Co.), 30 November, 1999 (30.11.99), Full text & WO 98/04223 A1 & EP 925048 A1 & US 5716351 A	14
X Y	CD-ROM of the specification and drawings annexed to the request of Japanese Utility Model Application No. 63478/1991(Laid-open No. 7221/1993) (Uni-Charm Corp.), 02 February, 1993 (02.02.93), Pages 5 to 6 (Family: none)	1-2,4 16

Form PCT/ISA/210 (continuation of second sheet) (July 1998)

(19) Europäisches Patentamt
European Patent Office
Office européen des brevets

(11) EP 2 184 042 A2

(12) EUROPEAN PATENT APPLICATION

(43) Date of publication:
12.05.2010 Bulletin 2010/19

(51) Int Cl.:
A61F 13/15 (2006.01) *B27N 3/00* (2006.01)

(21) Application number: 10152376.9

(22) Date of filing: 08.06.2000

(84) Designated Contracting States:
AT BE CH CY DE DK ES FI FR GB GR IE IT LI LU MC NL PT SE
Designated Extension States:
AL LT LV MK RO SI

(30) Priority: 08.06.1999 US 325764

(62) Document number(s) of the earlier application(s) in accordance with Art. 76 EPC:
00948502.0 / 1 191 915

(71) Applicant: Buckeye Technologies, Inc.
Memphis, TN 38112 (US)

(72) Inventors:
- Baer, Samuel, Charles
Greenville, SC 29615 (US)
- Li, Shu-Kang, Laurence
Delta, British Columbia V4L 2J2 (CA)
- Erspamer, John, P.
Lakeland, TN 38002 (US)
- Gross, James, Richard
Cordova, TN 38018 (US)

(74) Representative: HOFFMANN EITLE
Patent- und Rechtsanwälte
Arabellastrasse 4
81925 München (DE)

Remarks:
This application was filed on 02-02-2010 as a divisional application to the application mentioned under INID code 62.

(54) Unitary fluid acquisition, storage, and wicking material and method for forming the same

(57) The present invention provides a method of forming a multistrata absorbent structure, comprising: a) airlaying a 1st batt of fibers to be used in fluid distribution; b) airlaying a 2nd batt of fibers and a high absorbency material to be used in fluid storage over the 1st batt of fibers; c) airlaying a 3rd batt of fibers to be used in fluid acquisition over the 2nd batt of fibers; and d) compacting the batts of fibers to form a multistrata absorbent structure comprising a fluid storage stratum between an acquisition stratum and a distribution stratum.

FIG. 3

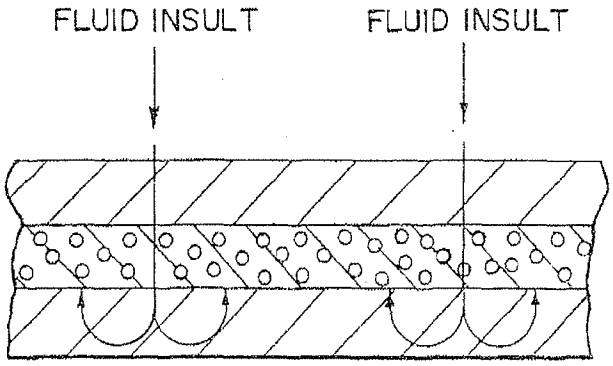

EP 2 184 042 A2

Description

FIELD OF THE INVENTION

[0001] The present invention is directed to improved fibrous absorbent structures having separate layers (or strata) as regions for fluid acquisition, storage, and distribution, and to a method of forming the same. The structures are useful in providing improved disposable absorbent products, such as diapers, adult incontinence pads, and sanitary napkins.

BACKGROUND OF THE INVENTION

[0002] Absorbent articles such as disposable diapers, adult incontinence pads, sanitary napkins, and the like, are generally provided with an absorbent core or storage layer, to receive and retain bodily liquids. The absorbent core is usually sandwiched, between a liquid pervious top sheet, whose function is to allow the passage of fluid to the core, and a liquid impervious backsheet which contains the fluid and prevents it from passing through the absorbent article. An absorbent core (e. g., for diapers and adult incontinence pads) typically includes fibrous batts or webs constructed of defiberized, loose, fluffed, hydrophilic, cellulosic fibers. The core may also include superabsorbent polymer(SAP) particles, granules, flakes or fibers. In addition, an absorbent article may contain a distribution layer that aids in transporting liquid quickly from the acquisition layer to the storage layer of the core. Conventional absorbent products have used separately formed layers for acquisition, distribution, and storage leading to complex and crowded production lines. A need, therefore, exists for an absorbent product where the acquisition, distribution, and storage functions are all performed in a single integrated structure.

[0003] Market demand for thinner and more comfortable absorbent articles has increased. Such articles may be obtained by decreasing the thickness of the diaper core, by reducing the amount of fibrous material used in the core while increasing the amount of SAP particles, and by calendering or compressing the core to reduce caliper and hence, increase density. However, higher density cores do not absorb liquid as rapidly as lower density cores because densification of the core results in smaller effective pore size. Accordingly, to maintain a suitable liquid absorption rate, it is necessary to provide a lower density layer having a larger pore size above the high density absorbent core to increase the rate of acquisition of liquid discharged onto the absorbent article. Because of the inadequate pore sizes, traditional absorbent structures have suffered from an inability to absorb large surges of fluid. A need clearly exists for absorbent structures having an acquisition layer of sufficient pore size to better accommodate fluid surges.

[0004] In a conventional multilayer absorbent structure having an acquisition layer, a distribution layer and a storage layer, the acquisition layer acquires the liquid insult and quickly transmits it by capillary action away from the skin of the wearer (in the Z-direction). Next, the fluid encounters the distribution layer. The distribution layer is typically of a higher density material, and causes the liquid to migrate away from the skin of the wearer (in the Z-direction) and also laterally across the structure (in the X-Y directions). Finally, the liquid migrates into the storage layer. The storage layer generally includes high density cellulosic fibers and SAP particles. The liquid is absorbed by the storage layer and especially the SAP particles contained therein.

[0005] Although the conventional multilayer structure described above can be effective, one disadvantage of this arrangement is that because the distribution layer is on the side of the storage layer facing the skin of the wearer, there is a possibility that liquid can Pool against the skin of the wearer before it is absorbed by the storage layer due to relatively poor fluid retention of the distribution layer. As the wearer moves, pressure is created and can result in fluid being released, thereby rewetting the wearer. Accordingly, it would be desirable to provide a structure wherein liquid is immediately acquired and transmitted away from the skin of the wearer in the Z-direction, where it can be absorbed into the storage layer while minimizing or eliminating the problem of liquid recontacting the skin of the wearer.

SUMMARY OF THE INVENTION

[0006] So as to improve the acquisition, storage and distribution of liquids, the present invention provides a method of forming a multistrata absorbent structure, comprising: a) airlaying a 1st batt of fibers to be used in fluid distribution; b) airlaying a 2nd batt of fibers and a high absorbency material to be used in fluid storage over the 1st batt of fibers; c) airlaying a 3rd batt of fibers to be used in fluid acquisition over the 2nd batt of fibers; and d) compacting the batts of fibers to form a multistrata absorbent structure comprising a fluid storage stratum between an acquisition stratum and a distribution stratum.

BRIEF DESCRIPTION OF DRAWINGS

[0007]

FIG. 1 shows a schematic cross section of a conventional multilayer absorbent structure.

FIG. 2 shows a schematic cross section of one possible embodiment of the unitary multistrata absorbent structures of the invention.

FIG. 3 shows a schematic cross section of the pathway of fluid absorption through the unitary multistrata absorbent structures of the invention.

DETAILED DESCRIPTION OF THE INTENTION

[0008] The present invention includes a unitary, multi-zone or multi-strata absorbent structure having an acquisition stratum which acquires the liquid insult and quickly transmits it by capillary action away from the skin of the wearer (in the Z-direction); a storage stratum containing higher density matrix fibers and SAP particles; and a distribution stratum which absorbs and retains some of the excess liquid passing through the storage stratum. As used herein, the terms "strata" and "stratum" refer to the layered regions which make up the unitary structure. The strata of the unitary structure is not an assembly or laminate of preformed layers forming a multilayered structure. Instead, the unitary structure is constructed by assembling the strata in a continuous, manner. Airlaid technology is the preferred method for assembling the strata of the unitary structure of the present invention.

[0009] In one embodiment, the distribution stratum includes a fibrous matrix material and causes the liquid to migrate laterally across the structure (in the X-Y directions) and back into the storage stratum, where the liquid is absorbed and retained by the SAP particles in the storage stratum. This arrangement causes liquid encountering the structure to be drawn away from the skin of the user and through the entire structure where it can be absorbed into the storage stratum with less propensity to Pool or retain moisture at the interface of the structure and the skin of the wearer. This invention also includes an absorbent structure with an acquisition stratum having an increased pore size.

[0010] In a preferred embodiment, the absorbent structures of the present invention include at least three strata, all of which are in fluid communication with each other. These strata include: a fluid acquisition (upper) stratum, a fluid storage (middle) stratum, and a fluid distribution (lower) stratum.

[0011] The fluid acquisition (upper) stratum may include: polyester (i.e. PET) and/or synthetic homopolymer fibers; 0-10% SAP; and thermal or latex binder resin; and will typically have a basis weight of 20-120 gsm (grams per square meter). The fluid storage (middle) stratum may include: fluff cellulose and/or chemically modified cellulose fiber; 10-75% SAP; and thermal binder resin; and will typically have a basis weight of 60-400 ism. The fluid distribution (lower) stratum may include: fluff cellulose and/or chemically modified cellulose fiber; 0-10% SAP; and thermal and/or latex binder resin: and will typically have a basis weight of 20-200 gsm.

[0012] A second preferred embodiment of this invention comprises four strata: a synthetic fiber acquisition stratum (top), a cellulosic fiber acquisition stratum (supper middle), a storage stratum (lower middle), and a distribution stratum (bottom).

[0013] The overall basis weight range of these composite structures are 100-720 gsm with an SAP content of 10-75%. The preferred basis weight range (s) and SAP content vary with the intended application. For feminine hygiene and light capacity adult incontinence applications, the basis weight and SAP content will tend toward the lower end of the ranges. For infant diaper and heavy capacity adult incontinence applications, the preferred basis weight and SAP content will tend toward the high end of the specified ranges.

[0014] The acquisition stratum is designed for minimum fluid retention. In a preferred embodiment, the matrix fiber (s) of the acquisition stratum is a synthetic fiber (s) that is at least 2 denier in size and capable of being latex bonded. Examples of suitable synthetic fibers include: polyesters, polyamides, and polyolefins, for example polyethylenes and polypropylenes. In another preferred embodiment, the acquisition stratum contains matrix fibers comprising 3 to 40 denier crimped PET fiber with a cut length of 3 to 12 mm.

[0015] The storage stratum is characterized by a relatively high concentration of superabsorbent polymer (SAP). The types of superabsorbent polymers which may be used in this invention include, for example: SAPs in their particulate form such as irregular granules, spherical particles, staple fibers and other elongated particles. U. S. Patent No. 5,147,343; No. 5,378,528; No. 5,795,439; No. 5,807,916; and No. 5,849,211, describe various superabsorbent polymers and methods of making superabsorbent polymers. One example of a superabsorbent polymer forming system is crosslinked acrylic copolymers of metal salts of acrylic acid and acrylamide or other monomers such as 2-acryiamido-2methylpropanesulfonic acid. Many conventional granular superabsorbent polymers are based on poly (acrylic acid) which has been crosslinked during polymerization with any of a number of multi-functional co-monomer crosslinking agents well-known in the art. Examples of multi-functional crosslinking agents are set forth in U. S. Patent No. 2,929,154; No. 3,224,986; No. 3,332,909; and No. 4,076,673. For instance, crosslinked carboxylated polyelectrolytes may be used to form superabsorbent polymers. Other watersoluble polyelectrolyte polymers are known to be useful for the preparation of superabsorbents by crosslinking, these polymers include: carboxymethyl starch, carboxymethyl cellulose, chitosan

salts, gelatine salts etc. They are not, however, commonly used on a commercial scale to enhance absorbency of dispensable absorbent articles mainly due to their higher cost. Superabsorbent polymer granules useful in the practice of this invention are commercially available from a number of manufacturers, such as Dow Chemical (Midland, Michigan), Stockhausen (Greensboro, North Carolina), and Chemdal (Arlington Heights, Illinois). In a preferred embodiment, the SAP is a surface crosslinked acrylic acid based powder such as Stockhausen 9350 or SX70.

[0016] Cellulose that has been modified to increase the degree of curl and stiffness of the individual fluff cellulose fibers (e. g. Buckeye HPF modified fluff cellulose) can be used in the storage stratum in place of or in addition to the standard fluff cellulose fibers to enhance the fluid acquisition and retention performance of the invention.

[0017] By distributing fluid in the x-y direction, the distribution stratum allows superabsorbent particles in the storage stratum that are far removed from the point of the fluid insult to absorb fluid. The distribution stratum also serves to pull fluid not immediately absorbed by the SAP of the storage stratum in the z-direction away from the wearer's skin.

[0018] The matrix fibers of the distribution stratum can include fluff pulp, modified fluff cellulose, or a blend thereof. In a preferred embodiment, the cellulosic fibers of the distribution stratum are modified to decrease the stiffness of the fibers, making the stratum more easily densified.

[0019] In a preferred embodiment of the invention, the fluid distribution stratum is comprised of primarily cellulosic fibers that have a mean pore size smaller than that of the fluid acquisition stratum and a pore size that is equal to or less than the pore size of the storage stratum. In general, a smaller mean pore size correlates with a higher density. In the invention, the density of the distribution stratum is greater than the density of the acquisition and storage strata. When the density of the distribution stratum is greater than the density of the acquisition stratum and storage stratum, a high fluid acquisition rate and low stain size factor of low density absorbent structures and the high fluid retention characteristic of high density structures can be achieved.

[0020] In a preferred embodiment, the strata of the claimed absorbent structures are formed as an airlaid web. Preferably, the absorbent strata are airlaid on top of a lightweight (i.e. 10-20 gsm) cellulose tissue or similar carrier layer that serves to contain the SAP powder during the web forming process and thus prevent plugging of the fiber collection wire with particles of SAP.

[0021] An airlaid web is typically prepared by disintegrating or fiberizing a cellulose pulp sheet or sheets, typically by hammermill, to provide individualized fibers. The individualized fibers are then air conveyed to forming heads on an airlaid web forming machine. Examples of several airlaid web forming machines are described in detail in U. S. Patent No. 5,527,171 (Soerensen). The forming heads may include rotating or agitated drums which serve to maintain fiber separation until the fibers are pulled by a vacuum onto a foraminous condensing drum or foraminous forming conveyor (or forming wire). Other fibers, such as a synthetic thermoplastic fiber, may also be introduced to the forming head through a fiber dosing system which includes a fiber opener, a dosing unit and an air conveyor. Where two defined strata are desired, such as a fluff pulp distribution stratum and a synthetic fiber acquisition stratum, two separate forming heads may be used for each type of fiber. After the fibers are airlaid the resulting structure is densified and the fibers are bonded together.

[0022] Typically a calender is used to densify the resulting structure. Compaction may also occur before all of the strata have been airlaid. For instance a first batt of airlaid fibers may be compacted to form a distribution stratum having a density of between about 0.08 and about 0.20 gr/cc prior to airlaying subsequent fiber batts.

[0023] The fibers of the acquisition, distribution, and/or storage strata may be bonded together by heat softening a thermoplastic binder present with the web fibers. The thermoplastic binder includes any thermoplastic polymer which can be melted at temperatures which will not extensively damage the cellulosic fibers. Preferably, the melting point of the thermoplastic binding material will be less than about 175°C. Examples of suitable thermoplastic materials include thermoplastic microfibers, thermoplastic powders, bonding fibers in staple form, and bicomponent staple fibers. In particular, the thermoplastic binding material may, for example, be polyethylene, polypropylene, polyvinylchloride, polyvinylidene chloride. Other synthetic fibrous materials which can be utilized in thermally bonded webs are described above. The thermoplastic binders may be intermixed with the cellulosic fibers in the airlaid web forming machine or may be added to the appropriate strata subsequent to their being airlaid.

[0024] Alternatively or in addition, the acquisition and distribution strata may be bonded together by applying a latex spray. Examples of elastomeric polymers available in latex form include butadiene-styrene, butadiene-acrylonitrile, and chloroprene (neoprene). Other examples of synthetic polymers that can be used in latexes include polymers or copolymers of alkylacrylates, vinyl acetates such as ethylene vinyl acetate, and acrylics such as styrene-butadiene acrylic. For purposes of industrial hygiene and elimination of a solvent recycling step, the synthetic latexes can be applied as an aqueous based emulsion rather than an organic solvent emulsion. Latexes useful in the present invention may be prepared by emulsion polymerization of certain olefinic (ethylenically unsaturated) monomers. This emulsion polymerization can be carried out by customary methods using any of a variety anionic, nonionic, cationic, zwitterionic and/or amphotenc emulsifiers to stablize the resultant latex, including alkyl sulfates, alkylarylalkoxy sulfates, alkylarylsulfonates and alkali metal and/or ammonium salts of alkyl-and alkylaryl-polyglycol ether-sulfates; oxyethylated fatty alcohols or oxyethylated alkylphenols, as well as block copolymers of ethylene oxide and propylene oxide; cationic adducts of

primary, secondary or tertiary fatty amines or fatty amine oxyethylates with organic or inorganic acids, and quaternary alkylammonium surfactants; and alkylamidopropylbetaines. The olefinic monomer can be a single type of monomer or can be a mixture of different olefinic monomers, i. e. to form copolymer particles dispersed or emulsified in the aqueous phase. Examples of olefinic monomers that can be used to form latex polymers includeC2-C4 alkyl and hydroxy alkyl acrylates, such as those selected from the group of propyl acrylate, n-butyl acrylate, isobutyl acrylate, 2-hydroxyethyl acrylate, 2-hydroxypropyl acrylate, ethyl acrylate and mixtures thereof. Other examples are C1-C4 alkyl or hydroxy alkyl methacrylates selected from the group of propyl methacrylate, n-butyl methacrylate, isobutyl methacrylate, 2-hydroxyethyl methacrylate, 2-hydroxypropyl methacrylate, ethyl methacrylate, ethyl methacrylate, vinyl acetate and mixtures thereof. Also suitable are mixtures of the aforementionedC2-C4 alkyl and hydroxy alkyl acrylates and C,-C4 alkyl or hydroxy alkyl methacrylates. Methods of applying the latex include coating, dipping, brushing, spraying, and foaming. In a preferred embodiment, the latex is applied by spraying. The latex resin can be applied before or after compaction of the fiber web.

[0025] Bicomponent staple fibers are characterized by a high melt temperature core polymer (typically polyethylene terephthalate (PET) or polypropylene) surrounded by a low melt temperature sheath polymer (typically polyethylene (e. g., Hoechst-Trevira Type-255 (Charlotte, NC)), modified polyethylene, or copolyesters).

[0026] The bonded web may be calendered a second time to increase its strength or embossed with a design or pattern. If thermoplastic fibers are present, hot calendering may be employed to impart patterned bonding to the web. Water may be added to the web if necessary to maintain specified or desired moisture content, to minimize dusting, or to reduce the buildup of static electricity. The finished web is then rolled for future use.

[0027] The following examples are meant to illustrate the invention and not to limit its scope.

EXAMPLES

[0028] Examples of some preferred embodiments of the invention are described in Tables 1 and 2. The raw materials for the embodiments described in Tables 1,2, and 3 are, unless otherwise noted:

Fluff Cellulose: Buckeye Foley Fluff (Buckeye Technologies Inc., Memphis, TN)

Bonding fiber: Hoechst-Trevira T-255 from Hoechst-Trevira (Charlotte, NC)

Latex Binder: AirFlex 192 from Air Products (Allentown PA)

PET fiber : Type D2645 6 denier X 6mm crimped fiber from Hoechst-Trevira (Germany)

Tissue: 18 gsm (grams per square meter) wet laid

Example 1

[0029]

Table 1-Single Compaction Embodiment-Sample MJ998-MF-17

	Fluff Cellulose (gsm)	Bonding Fiber (gsm)	SAP Powder (gsm)	Latex Binder Resin (gsm)	PET Fiber (gsm)
Acquisition Stratum	0.0	0.0	0.0	6.0	34.0
Storage Stratum	55	5	40	0.0	0.0
Distribution Stratum	57	3	0.0	0.0	0.0

[0030] The MJ998-MF-17 material was formed on an M & J-type air forming line. The cellulosic distribution stratum was formed first onto a tissue. The storage stratum was then formed onto the distribution stratum and then the acquisition stratum was formed on top of the storage stratum. The resulting three strata material was thermal bonded and then compressed by calendering to achieve an overall density of 0.142 gr/cc.

Example 2

[0031] In an alternative embodiment, the distribution stratum is compacted first before the other strata are airlaid and all the strata are compacted together.

Table 2-Doubie Compaction Embodiment - Sample MJ998-MF-18b

	Fluff Cellulose (gsm)	Bonding Fiber (gsm)	SAP Powder (gsm)	Latex Binder Resin (gsm)	PET Fiber (gsm)
Acquisition Stratum	0.0	0.0	0.0	6.0	34.0
Storage Stratum	55	5	40	0.0	0.0
Distribution Stratum	57	3	0.0	0.0	0.0

[0032] The MJ998-MF-18b material was formed on an M & J-type air forming line. The cellulosic distribution stratum was formed on tissue and compacted by calendering to a density of 0.15 gr/cc. The storage stratum was then formed onto the distribution strata and then the acquisition stratum was formed on top of the storage stratum. The resulting three strata material was compacted and then thermal bonded to achieve an overall composite material density of 0.081 gr/cc.

Example 3

[0033] It is preferred that the cellulose fibers of the distribution stratum be thermally bonded together. Table 3 describes a composite example where a thermal bonded fluff cellulose distribution stratum resides above the storage stratum and below the acquisition stratum.

Table 3-Absorbent Structure with Distribution Stratum Above Storage Stratum-Sample MJ998-MF-9 (Reference)

	Fluff Cellulose (gsm)	Bonding Fiber (gsm)	SAP Powder (gsm)	Latex Binder Resin (gsm)	PET Fiber (gsm)
Acquisition Stratum	0.0	0.0	0.0	6.0	34.0
Distribution Stratum	57	3	0.0	0.0	0.0
Storage Stratum	55	5	40	0.0	0.0

[0034] The MJ998-MF-9 material was also formed on an M & J-type pilot line. This material reflects a previously described construction in that the fluid storage stratum is formed first. The distribution stratum is formed on top of the storage stratum and then the acquisition stratum is formed on top of the distribution stratum. The fluff cellulose in the distribution stratum was Buckeye HPF fiber. This three strata structure was thermally bonded and compacted to achieve an overall density of 0.094 gr/cc.

Fluid Acquisition and Fluid Retention Testing

[0035] The composite materials described above were subjected to fluid acquisition testing. Each sample (having the dimensions of 10 cm x 25cm) was wrapped with an appropriate coverstock material and placed on a bottom fluid intake test ("FIT") board with the wire or carrier side facing down. The center of the samples was marked.

[0036] Acquisition rate evaluations were made by subjecting test samples to three consecutive 10 ml insults of 0.9% saline solution. The first insult of 10 ml 0.9% saline solution was poured into the clear addition tube of the FIT board as fast as possible, without overflowing. The time from the moment of pouring until the saline reached the test sample was measured. The stopwatch was stopped as soon as all of the saline passed from the bottom edge of the tube. The recorded time was the time required for acquisition by the top stratum. After one minute intervals, the procedure was

repeated with a second and third 10 ml insult.

[0037] The acquisition rate from each fluid insult was determined according to the following formula:

$$\text{Acquisition Rate (ml/s)} = \frac{\text{volume of fluid insult (ml)}}{\text{acquisition time(s)}}$$

[0038] The composite materials described above were also subjected to fluid retention testing by measuring the amount of 0.9% saline solution that could be absorbed back through the top sheet of the structure by a stack of filter paper under 6.89 mbar (0.1 psi) pressure after each fluid insult. Samples for 3 separate measurements (each measuring 21.6 cm x 27.9 cm (8 ½" x 11")) were prepared. Each sample was placed onto a plastic platform with tissue side down and its center was marked. 10 ml of 0.9 % saline solution (first insult) was drained onto the sample from a Tunnel from a distance of approximately 3.8 cm (1.5") above the center of the sample. The sample was allowed to sit for 20 minutes. A stack of 12 filter papers was weighed and placed on the center of the wetted area and pressed by a circular weight on top. After 2 minutes the wet filter papers were removed and weighed again. This procedure was repeated with a second insult of 10 ml saline and a stack of 16 filter papers, and a third insult of 10 ml saline and a stack of 20 filter papers. The rewet value and the percent fluid retention was calculated for the first, second and third insults according to the following formulas:

$$\text{Rewet}_{1,\,2,\,\text{or}\,3} = \text{Wet filter papers weight} - \text{Dry filter papers weight}$$

$$\%\ \text{Retention} = (50 - \text{Rewet})\ 50 \times 100\%$$

[0039] Further, the size of the fluid stain after the third insult on the fluid retention test was recorded. The results are shown in Table 4.

Table 4-Acquisition Rate and Fluid Retention Testing

Sample	Acquisition Rate (ml/sec)			Fluid Retention (%)			Stain Area
	1st Insult	2nd Insult	3rd Insult	1st Insult	2nd Insult	3rd Insult	Sq. cm.
Example 1 -MJ998-MF-17	3.7	1.6	1.4	99%	97%	86%	112
Example 2 -MJ998-MF-18b	7.5	6.1	4.9	99%	91%	73%	79
Example 3 -MJ998-MF-9	5.4	3.5	2.9	98%	79%	55%	95

[0040] A comparison of MF-9 and MF-17 shows that moving the fluid distribution stratum from the middle position (as in MF-9) to the bottom of the three stratum structure (as in MF 17) significantly increases the fluid retention at the expense of some reduction of fluid acquisition rate and increase in fluid stain size.

[0041] The double compaction embodiment of the present invention,MF-1.8b, shows improvement over MF-9 for fluid acquisition rate, fluid retention, and stain size.

ADDITIONAL EXAMPLES

[0042] In the following examples, the raw materials are, unless otherwise noted, the following:

Standard Fluff Pulp:	Foley Fluff (Buckeye Technologies Inc., Memphis, TN)
Resilient Fluff Pulp:	HPF (Buckeye Technologies Inc., Memphis, TN)
Compressible Fluff Pulp:	ND416 (Weyerhaeuser-Tacoma, WA)
Superabsorbent Powder:	1180 (Stockhausen-Greensboro, NC)
Binder Fiber:	T-255,2.8 dtex X 4 mm (Kosa, Charlotte, NC)
PET Fiber:	T-224,17 dtex X 6 mm (Kosa, Charlotte, NC)
Latex Binder:	AirFlex 192 (Air Products, Allentown, PA)

[0043] The composite materials described above were subjected to a fluid acquisition test and a fluid retention test

as described above, unless otherwise noted.

Examples 4 and 5 - Acquisition Stratum Matrix Fibers

[0044] Examples 4 and 5 compare latex bonded fluff cellulose fibers with latex bonded synthetic fibers in the acquisition stratum of a composite absorbent structure.

[0045] Example BU124-19 is an embodiment of the invention with a latex bonded PET fiber acquisition stratum andBU124-22 is identical toBU 124-19 except that the acquisition stratum is comprised of latex bonded standard fluff cellulose fibers.

Table AI-Absorbent Structure with Latex Binder and Fluff Pulp in the Acquisition Stratum-Example BU124-22

	Distribution Stratum	Storage Stratum	Acquisition Stratum	Sum	
	Bottom	Middle	Top		
	(g/m²)	(g/m²)	(g/m²)	(g/m²)	Total
Compressible Pulp	69.3	0.0	0.0	69.3	28.5%
Resilient Pulp	0.0	43.7	0.0	43.7	18.0%
SAP Powder	0.0	55.9	0.0	55.9	23.0%
Binder Fiber	6.2	7.6	0.0	13.8	5.7%
PET Fiber	0.0	0.0	0.0	0.0	0.0%
Standard Fluff Pulp	0.0	0.0	38.4	38.4	15.8%
Latex Binder	0.0	0.0	6.8	6.8	2.8%
Carrier Tissue	15.0	0.0	0.0	15.0	6.2%
Total	90.5	107.2	45.2	242.9	100.0%

Table A2-Absorbent Structure with Latex Binder and PET Fiber in the Acquisition Stratum-Example BU124-19

	Distribution Stratum	Storage Stratum	Acquisition Stratum	Sum	
	Bottom	Middle	Top		
	(g/m²)	(g/m²)	(g/m²)	(g/m²)	Total
Compressible Pulp	69.3	0.0	0.0	69.3	28.5%
Resilient Pulp	0.0	43.7	0.0	43.7	18.0%
SAP Powder	0.0	55.9	0.0	55.9	23.0%
Binder Fiber	6.2	7.6	0.0	13.9	5.7%
PET Fiber	0.0	0.0	38.4	38.4	15.8%
Standard Fluff Pulp	0.0	0.0	0.0	0.0	0.0%
Latex Binder	0.0	0.0	6.8	6.8	2.8%
Carrier Tissue	15.0	0.0	0.0	15.0	6.2%
Total	90.5	107.2	45.2	243	100.0%

[0046] Table A3 shows the relative fluid acquisition and retention performance of samples BU124-22 (having a latex bonded standard cellulose fluff acquisition stratum) and BU124-19 (having a latex bonded PET fiber acquisition stratum).

Table A3-Relative Performance of Absorbent Structures with Fluff Pulp (BU124-22) and with PET Fiber (BU124-19) in the Acquisition Stratum

Grade	Fluid Retention - 7 ml Insults			Acquisition Rate 3rd 5ml Insult
	1st insult	2nd Insult	3rd Insult	(ml/sec)
BU124-22	74.1%	52.8%	38.1%	0.053
BU124-19	95.6%	71.5%	56.1%	0.18

Examples 6 and 7 - SAP in middle stratum vs. SAP in bottom stratum of a three stratum unitary structure.

[0047] Examples 6 and 7 compare absorbent structures with SAP in the middle stratum versus absorbent structures with SAP in the bottom stratum of a three stratum unitary structure.

[0048] Example X575 is a preferred embodiment of the invention with the SAP in the middle stratum; example X572 is similar to X575 except that the superabsorbent powder is placed in the bottom stratum.

Table B1 - Absorbent Structure with SAP in Middle Stratum-Example X575

	Distribution Stratum	Storage Stratum	Acquisition Stratum	Sum	
	Bottom	Middle	Top		
	(g/m^2)	(g/m^2)	(g/m^2)	(g/m^2)	Total
Compressible Pulp	69.3	0.0	0.0	69.3	28.5%
Resilient Pulp	0.0	43.7	0.0	43.7	18.0%
SAP Powder	0.0	55.9	0.0	55.9	23.0%
Binder Fiber	6.2	7.6	0.0	13.8	5.7%
PET Fiber	0.0	0.0	38.4	38.4	15.8%
Latex Binder	0.0	0.0	6.8	6.8	2.8%
Carrier Tissue	15.0	0.0	0.0	15.0	6.2%
Total	90.5	107.2	45.2	242.9	100.0%
Density	0.133 gr/cc				

Table B2 - Absorbent Structure with SAP in Bottom Stratum - ExampleX572

	Storage Stratum	Distribution Stratum	Acquisition Stratum	Sum	
	Bottom	Middle	Top		
	(g/m^2)	(g/m^2)	(g/m^2)	(g/m^2)	Total
Compressible Pulp	45.8	0.0	0.0	45.8	18.8%
Resilient Pulp	0.0	65.6	0.0	65.6	27.0%
SAP Powder	55.9	0.0	0.0	55.9	23.0%
Binder Fiber	7.6	7.9	0.0	15.5	6.4%
PET Fiber	0.0	0.0	38.4	38.4	15.8%
Latex Binder	0.0	0.0	6.8	6.8	2.8%
Carrier Tissue	15.0	0.0	0.0	15.0	6.2%

(continued)

	Storage Stratum	Distribution Stratum	Acquisition Stratum	Sum	
	Bottom	Middle	Top		
	(g/m²)	(g/m²)	(g/m²)	(g/m²)	Total
Total	124.3	73.5	45.2	243.0	100.0%
Density	0.114 gr/cc				

[0049] Table B3 shows the fluid acquisition and retention performance of samples X575 and X572,

Table B3 - Relative Performance of Absorbent Structures with SAP in Bottom)(X572) and Middle (X575) Strata

Sample	Fluid Retention - 7 ml Insults			Acquisition Rate 3rd 5ml Insult
	1st insult	2nd Insult	3rd Insult	(ml/sec)
X572	99.1%	72.3%	48.1%	0.171
X575	99.0%	90.4%	66.6%	0.255

Example 8 and 9-Preferred Embodiments vs. Commercial Thin Sanitary Pads

[0050] Examples 8 and 9 compare several preferred absorbent structures of this application with commercial thin sanitary pads.

[0051] Examples X573 and X574 are preferred embodiments of the invention. They differ from sample X575 only in basis weight.

TableC 1-3 Strata Absorbent Structure-Example X573

	Distribution Stratum	Storage Stratum	Acquisition Stratum	Sum	
	Bottom	Middle	Top		
	(g/m²)	(g/m²)	(g/m²)	(g/m²)	Total
Compressible Pulp	45.5	0.0	0.0	45.5	26.0%
Resilient Pulp	0.0	31.5	0.0	31.5	18.0%
SAP Powder	0.0	40.3	0.0	40.3	23.0%
Binder Fiber	4.5	5.5	0.0	10.0	5.7%
PET Fiber	0.0	0.0	27.7	27.7	15.8%
Latex Binder	0.0	0.0	4.9	4.9	2.8%
Carrier Tissue	15.0	0.0	0.0	15.0	8.6%
Total	65.0	77.3	32.6	174.9	100%
Density	0.105gr/cc				

Table C2 - 3 Strata Absorbent Structure-Example X574

	Distribution Stratum	Storage Stratum	Acquisition Stratum	Sum	
	Bottom	Middle	Top		
	(g/m²)	(g/m²)	(g/m²)	(g/m²)	Total
Compressible Pulp	59.6	0.0	0.0	59.6	27.7%
Resilient Pulp	0.0	38.7	0.0	38.7	18.0%
SAP Powder	0.0	49.5	0.0	49.5	23.0%
Binder Fiber	5.5	6.7	0.0	12.2	5.7%
PET Fiber	0.0	0.0	34.0	34.0	15.8%
Latex Binder	0.0	0.0	6.0	6.0	2.8%
Carrier Tissue	15.0	0.0	0.0	1.5.0	7.0%
Total	80.1	94.9	40.0	215.0	100.0%
Density	0.124 gr/cc				

[0052] Table C3 shows the fluid acquisition and retention performance of preferred embodiments of the invention vs. commercially available thin sanitary pads.

Table C3 - Relative Performance of Examples X573, X574, X575, and Commercial Thin Sanitary Pads

Sample	Basis Weight	Fluid Retention - 7 ml Insults			Acquisition Rate 3rd 5 ml Insult
	(gsm)	1st Insult	2nd Insult	3rd Insult	(ml/sec)
X573	170	95.6%	62.7%	42.4%	0.164
X574	215	98.9%	79.4%	57.1%	0.195
X575	243	99.0%	90.4%	66.6%	0.255
Brand					
A	368	80.0%	58.6%	44.3%	0.040
B	233	87.1%	68.6%	51.4%	0.068
C	250	81.4%	58.6%	38.6%	0.018

Examples 10 and 11 - Chemically Modified Fluff Cellulose vs. Standard Fluff Cellulose

[0053] Examples 10 and 11 compare structures including chemically modified fluff cellulose and standard fluff cellulose for the storage stratum.

Table D1 - Absorbent Structure with Standard Fluff Cellulose-Example MJ299-MF-2

	Distribution Stratum	Storage Stratum	Acquisition Stratum	Sum	
	Bottom	Middle	Top		
	(g/m²)	(g/m²)	(g/m²)		Total
Compressible Pulp	61.8	0.0	0.0	61.8	28.1%
Resilient Pulp	0.0	0.0	0.0	0.0	0.0%
Standard Pulp	0.0	55.0	0.0	55.0	25.0%
SAP Powder	0.0	40.0	0.0	40.0	18.2%

(continued)

	Distribution Stratum	Storage Stratum	Acquisition Stratum	Sum	
	Bottom	Middle	Top		
	(g/m²)	(g/m²)	(g/m²)		Total
Binder Fiber	3.3	5.0	0.0	8.3	3.8%
PET Fiber	0.0	0.0	34.0	34.0	15.4%
Latex Binder	0.0	0.0	6.0	6.0	2.7%
Carrier Tissue	15.0	0.0	0.0	15.0	6.8%
Total	80.1	100.0	40.0	220.1	100.0%
Density	0.127gr/cc				

Table D2 - Absorbent Structure with Resilient Cellulose Pulp-Example MJ299-MF-6

	Distribution Stratum	Storage Stratum	Acquisition Stratum	Sum	
	Bottom	Middle	Top		
	(g/m²)	(g/m²)	(g/m²)	(g/m²)	Total
Compressible Pulp	61.8	0.0	0.0	61.8	28.1%
Resilient Pulp	0.0	55.0	0.0	55.0	25.0%
standard Pulp	0.0	0.0	0.0	0.0	0.0%
SAP Powder	0.0	40.0	0.0	40.0	18.2%
Binder Fiber	3.3	5.0	0.0	8.3	3.8%
PET Fiber	0.0	0.0	34.0	34.0	15.4%
Latex Binder	0.0	0.0	6.0	6.0	2.7%
Carrier Tissue	15.0	0.0	0.0	15.0	6.8%
Total	80.1	100.0	40.0	220.1	100.0%
Density	0.126g/cc				

[0054] Table D3 gives the fluid acquisition and retention performance for samples MJ299-MF-2 and MJ299-MF-6. The test procedure used for Table D3 deviates for the above fluid acquisition and fluid retention procedures in that multiple 10 ml insults of 0.9% saline solution are utilized in both the fluid acquisition and retention tests.

Table D3-Relative Performance of Absorbent Structure with Standard Fluff Cellulose (MJ299-MF-2) and Resilient Cellulose Pulp (MJ299-MF-6)

Grade	Fluid Retention - 7ml Insults			Acquisition Rate 3rd 5ml Insult
	1st Insult	2nd Insult	3rdInsult	(ml/sec)
MJ299-MF-2	98.6%	76.6%	42.8%	0.9
MJ299-MF-6	98.8%	73.9%	72.0%	1.5

Example 12 - Preferred Embodiment vs. Commercial Infant Diapers

[0055] Example 12 compares several preferred absorbent structures of this application with commercially available

infant diapers.

[0056] Example MJ998-HMF-3 is an embodiment of the invention that is designed for infant diaper core/acquisition stratum replacement

Table El-Absorbent Structure Suitable for Use in Diapers-Example MJ998-HMF-3

	Distribution Stratum	Storage Stratum	Acquisition Stratum	Sum	
	Bottom	Middle	Top		
	(g/m²)	(g/m²)	(g/m²)	(g/m²)	Total
Compressible Pulp	95.0	0.0	0.0	95.0	20.4%
Resilient Pulp	0.0	0.0	0.0	0.0	0.0%
Standard Pulp	0.0	105.0	0.0	105.0	22.6%
SAP Powder	0.0	180.0	0.0	180.0	38.7%
Binder Fiber	5.0	15.0	0.0	20.0	4.3%
PET Fiber	0.0	0.0	42.5	42.5	9.1%
Latex Binder	0.0	0.0	8.0	8.0	1.7%
Carrier Tissue	15.0	0.0	0.0	15.0	3.2%
Total	115.0	300.0	50.5	465.5	100.0%
Density	0.122 gr/cc				

[0057] Table E2 shows the fluid acquisition rate and fluid retention test results for sample MJ998-HMF-3 and several commercially available diapers. The test procedures are similar to the other examples except that all fluid insults are 50 ml of 0.9% saline and that the MJ998-NHF-3 was cut into a 10 cm x 25 cm section.

Table E2 - Performance of Example MJ998-HMF-3

		Multiple 50 ml Saline Insults			
Sample	**Basis Weight**	**Fluid Retention (%)**			**Acquisition Rate (ml/sec)**
	(gsm)	**1st Insult**	**2nd Insult**	**3rd Insult**	**3rd Insult**
MJ998-HMF-3	477	99.9%	99.8%	99.5%	3.7
Commercial D	622	99.9%	96.8%	79.8%	2.4
Commercial E	792	99.9%	99.0%	95.9%	1.8
Commercial F	522	99.5%	96.9%	87.3%	2.9
Commercial G	840	96.4%	79.1%	57.2%	2.5

Example 13

[0058]

Table F

Compressive Force	PET	HPF	Foley Fluff	ND-416
0 bar (0 PSI)	0.070	0.032	0.032	0.038
31 bar (450 PSI)	0.094	0.099	0.100	0.113
62 bar (900 PSI)	0.100	0.117	0.126	0.170
93 bar(1350 PSI)	0.105	0.133	0.161	0.198

[0059] Table F provides a comparison of the response of various fluff cellulose fibers and a PET fiber to a given compressive force. The fibers in Table F are: 15 denier X 6 mm X 1.57 crimps/cm (4 crimps/inch) PET fiber from Kosa (Salisbury, N C); HPF, a chemically stiffened fluff cellulose fiber from Buckeye Technologies; Foley Fluff, a standard fluff cellulose fiber from Buckeye Technologies; ND-416, a chemically softened fluff cellulose fiber from Weyerhaeuser (Tacoma, WA).

[0060] A blend containing a 90 gsm sample of each fiber with 1.0 gsm of a T-255 binder fiber was opened and air formed into a 100 gsm fiber batt. The fiber batt was bonded in a hot air oven. Separate pieces of each of the materials were subjected to a compressive force of 0 bar (0 psi), 31 bar (450 psi), 62 bar (900 psi) and 93 bar(1350 psi) for a period of one minute. The caliper of each compressed sample was measured to determine the density. The density as a function of compressive force is shown in Table F. This tabulation shows that the various fibers will yield a bonded air laid material with a density dependent upon the compressive force applied..

[0061] Thus, a compressed unitary structure with a top stratum comprised of PET fibers, and middle stratum comprising Buckeye HPF fibers and a bottom stratum comprised of Weyerhaeuser ND-416 fibers will not have a constant density from top to bottom. Instead, The data shown in Table F shows that a three-tier density gradient will occur in the compressed structure with the top PET stratum having the lowest density and the bottom ND-416 stratum having the highest density.

[0062] Further, the invention may be illustrated by the following numbered items:

1. A unitary absorbent structure comprising:

   a. a fluid acquisition stratum;
   b. a fluid distribution stratum; and
   c. a fluid storage stratum between the acquisition stratum and the distribution stratum, wherein the acquisition, distribution, and storage strata are in fluid communication with each other.

2. The unitary absorbent structure of item 1, wherein (a) the fluid acquisition stratum comprises polyester fibers and has a basis weight of between 20 and 120 gsm; (b) the fluid storage stratum includes 10 to 75% by weight super-absorbent polymer and has a basis weight of between 60 and 400 gsm; and (c) the fluid distribution stratum includes cellulose fibers and has a basis weight of between 20 and 200 gsm.

3. A diaper incorporating the unitary absorbent structure of item 1.

4. A feminine hygiene pad incorporating the unitary absorbent structure of item 1.

5. An adult incontinence pad incorporating the unitary absorbent structure of item 1.

6. The unitary absorbent structure of item 1, wherein the average resiliency of each stratum decreases in a gradient in the direction from the acquisition stratum to the distribution stratum.

7. The unitary absorbent structure of item 1, wherein the average pore size of each stratum decreases in a gradient in the direction from the acquisition stratum to the distribution stratum.

8. The unitary absorbent structure of item 1, wherein the acquisition stratum contains an aqueous latex binder resin, bicomponent fibers or a mixture thereof.

9. The unitary absorbent structure of item 1, wherein the acquisition stratum contains latex and synthetic fibers.

10. The unitary absorbent structure of item 1, wherein the acquisition stratum comprises synthetic fibers, and further comprises a bonder selected from the group consisting of bicomponent fibers, polyolefin powder, and mixtures thereof.

11. The unitary absorbent structure of item 1, wherein the acquisition stratum comprises polyester terephthalate (PET) fiber that is at least 2 denier in size.

12. The unitary absorbent structure of item 1, wherein the acquisition stratum comprises 3-15 5 denier crimped PET fiber with a cut length of between about 3 and about12 mm.

13. The unitary absorbent structure of item I, wherein the acquisition stratum comprises a first substratum comprising cellulosic fibers and a second substratum comprising synthetic fibers, and wherein the first substratum is closer

than the second substratum to the storage stratum.

14. The unitary absorbent structure of item 1, wherein the storage and distribution stratums each contain thermoplastic bonding fibers.

15. The unitary absorbent structure of item l, wherein the storage stratum comprises cellulosic fibers and superabsorbent polymer.

16. The unitary absorbent structure of item 1, wherein the storage stratum comprises cellulosic fibers that have been modified to increase the curl and/or stiffness of the fibers.

17. The unitary absorbent structure of item 1, wherein the mean pore size of the distribution stratum is less than the mean pore size of the acquisition stratum and less than or equal to the mean pore size of the storage stratum.

18. The unitary absorbent structure of item 1, wherein the average pore size of the distribution stratum is less than the average pore size of either the acquisition or storage strata.

19. The unitary absorbent structure of item 1, wherein the average pore size of the distribution stratum is less than one half the average pore size of the acquisition and storage strata.

20. The unitary absorbent structure of item 1, wherein the distribution stratum comprises cellulosic fibers.

21. The unitary absorbent structure of item 1, wherein the distribution stratum comprises cellulosic fibers that have been modified to decrease the stiffness of the fibers.

22. The unitary absorbent structure of item 1, further comprising a tissue layer in contact with the surface of the distribution stratum that faces opposite to the storage stratum.

Claims

1. A method of forming a multistrata absorbent structure, comprising:

   a. airlaying a 1st batt of fibers to be used in fluid distribution;
   b. airlaying a 2nd batt of fibers and a high absorbency material to be used in fluid storage over the 1 st batt of fibers;
   c. airlaying a 3rd batt of fibers to be used in fluid acquisition over the 2nd batt of fibers; and
   d. compacting the batts of fibers to form a multistrata absorbent structure comprising a fluid storage stratum between an acquisition stratum and a distribution stratum.

2. The method of claim 1, further comprising applying a latex binder resin to the fluid acquisition stratum or the 3rd batt of fibers.

3. The method of claim 1 or 2, wherein the 3rd batt of fibers comprises synthetic fibers.

4. The method of claim 1, 2 or 3, wherein the 3rd batt of fibers comprises PET fibers that are at least 2 denier in size.

5. The method of any of claims 1 to 4, wherein the 3rd batt of fibers comprises crimped PET fiber of between 3 to 15 denier with a cut length of between about 3 and about 12 mm.

6. The method of claim 1 or 2, wherein the 3rd batt of fibers comprises cellulosic fibers.

7. The method of any of claims 1 to 6, wherein the 2nd batt of fibers comprises cellulosic fibers.

8. The method of any of claims 1 to 7, wherein the 2nd batt of fibers comprises cellulosic fibers that have been modified to increase the curl and stiffness of the fibers.

9. The method of any of claims 1 to 8, wherein thermoplastic bonding fibers are intermixed with the 1st and 2nd batts of fibers while they are being airlaid.

10. The method of any of claims 1 to 9, wherein the 1st batt of fibers is compacted to form a distribution stratum having a density of between about 0.08 and about 0.20 gr/cc prior to the airlaying of the 2nd batt of fibers.

11. The method of any of claims 1 to 10, wherein the compacting of step (d) results in a distribution stratum with a density greater than the density of the acquisition and storage strata.

12. The method of any of claims 1 to 11, wherein the compacting of step (d) results in a distribution stratum with a density at least twice the aggregate density of the acquisition and storage strata.

13. The method of any of claims 1 to 12, wherein the 1 st batt of fibers comprises cellulosic fibers.

14. The method of any of claims 1 to 13, wherein the 1st batt of fibers comprises cellulosic fibers that have been modified to decrease the stiffness of the fibers.

15. The method of any of claims 1 to 14, wherein the compacting of step (d) results in a distribution stratum with a mean pore size less than the mean pore size of the acquisition stratum and less than or equal to the mean pore size of the storage stratum.

16. The method of any of claims 1 to 15, wherein the airlaying of step (a) occurs over a tissue layer.

17. A method of forming a multistrata absorbent structure comprising:

a. airlaying a 1 st batt of fibers to be used in fluid distribution;
b. airlaying a 2nd batt of fibers and a high absorbency material to be used in fluid storage over the 1st batt of fibers;
c. airlaying a 3rd batt of fibers comprising cellulosic fibers to be used in fluid acquisition over the 2nd batt of fibers;
d. airlaying a 4th batt of fibers comprising synthetic fibers to be used in fluid acquisition over the 3rd batt of fibers; and
e. compacting the fibers to form a multistrata absorbent structure comprising from top to bottom an acquisition substratum comprising synthetic fibers, an acquisition substratum comprising cellulosic fibers, a fluid storage stratum, and a fluid distribution stratum.

18. The method of claim 17, wherein the 4th batt of fibers comprises synthetic fibers.

19. The method of claim 17 or 18, further comprising applying a latex binder resin to the fluid acquisition substrata of the 3rd and 4th batts of fibers.

20. The method of claim 17, 18 or 19, wherein the 3rd batt of fibers comprises synthetic fibers.

21. The method of any of claims 17 to 20, wherein the 4th batt of fibers comprises PET fibers that are at least 2 denier in size.

22. The method of any of claims 17 to 21, wherein the 4th batt of fibers comprises crimped PET fiber of between 3 and 15 denier with a cut length of between about 3 and about 12 mm.

23. The method of claim 17, 18 or 19, wherein the 3rd batt of fibers comprises cellulosic fibers.

24. The method of any of claims 17 to 23, wherein the 2nd batt of fibers comprises cellulosic fibers.

25. The method of any of claims 17 to 24, wherein the 2nd batt of fibers comprises cellulosic fibers that have been modified to increase the curl and stiffness of the fibers.

26. The method of any of claims 17 to 25, wherein thermoplastic bonding fibers are intermixed with the 1st and 2nd batts of cellulosic fibers while they are being airlaid.

27. The method of any of claims 17 to 26, wherein the 1st batt of fibers is compacted to form a distribution stratum having a density of between about 0.08 and about 0.20 gr/cc prior to the airlaying of the 2nd batt of cellulosic fibers.

28. The method of any of claims 17 to 27, wherein the compacting of step (e) results in a distribution stratum with a

density greater than the density of the acquisition and storage stratums.

29. The method of any of claims 17 to 28, wherein the compacting of step (e) results in a distribution stratum with a density at least twice the aggregate density of the acquisition and storage strata.

30. The method of any of claims 17 to 29, wherein the 1st batt of fibers comprises cellulosic fibers.

31. The method of any of claims 17 to 30, wherein the 1st batt of fibers comprises cellulosic fibers that have been chemically modified to increase the curl and thickness of the fibers.

32. The method of any of claims 17 to 31, wherein the compacting of step (e) results in a distribution stratum with a mean pore size less than the mean pore size of the acquisition stratum and less than or equal to the mean pore size of the storage stratum.

33. The method of any of claims 17 to 32, wherein the airlaying of step (a) occurs over a tissue layer.

34. A method of forming a multistrata absorbent structure comprising:

a. airlaying a 1 st batt of fibers to be used in fluid distribution;
b. airlaying a 2nd batt of fibers to be used in fluid storage over the 1st batt of fibers;
c. airlaying a high absorbency material over the 2nd batt of fibers;
d. airlaying a 3rd batt of fibers to be used in fluid acquisition over the 2nd batt of fibers; and
e. compacting the fibers to form a multistrata absorbent structure comprising a fluid storage stratum between an acquisition stratum and a distribution stratum.

35. A method of forming a multistrata absorbent structure comprising:

a. airlaying a 1st batt of fibers to be used in fluid distribution;
b. airlaying a 2nd batt of fibers to be used in fluid storage over the 1st batt of fibers;
c. airlaying a high absorbency material over the 2nd batt of fibers;
d. airlaying a 3rd batt of fibers to be used in fluid acquisition over the 2nd batt of fibers;
e. airlaying a 4th batt of fibers to be used in fluid acquisition over the 3rd batt of fibers; and
f. compacting the fibers to form a stratified absorbent structure comprising from top to bottom an acquisition substratum comprising synthetic fibers, an acquisition substratum comprising cellulosic fibers, a fluid storage stratum, and a fluid distribution stratum.

FIG. 1
PRIOR ART

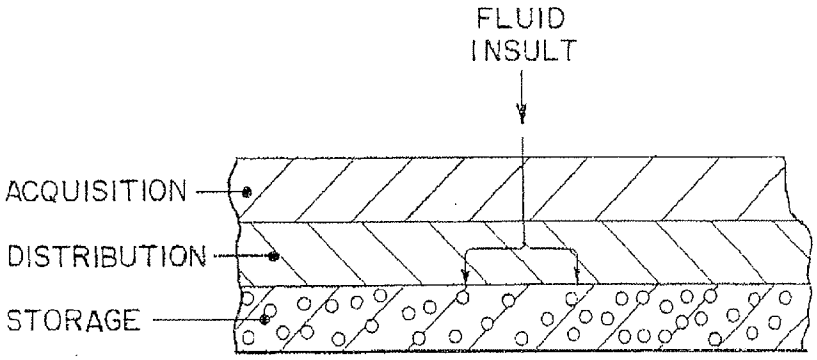

FIG. 2

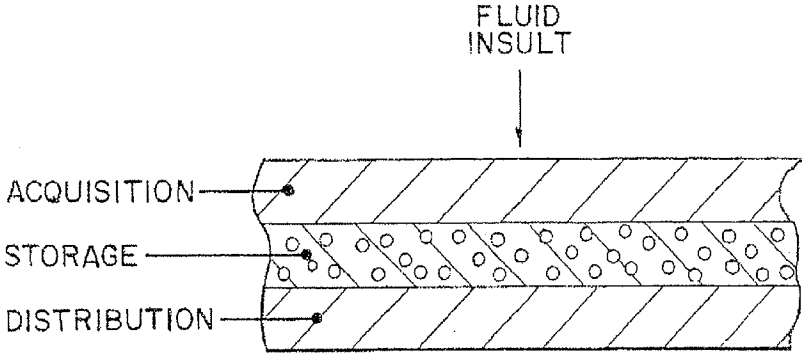

FIG. 3

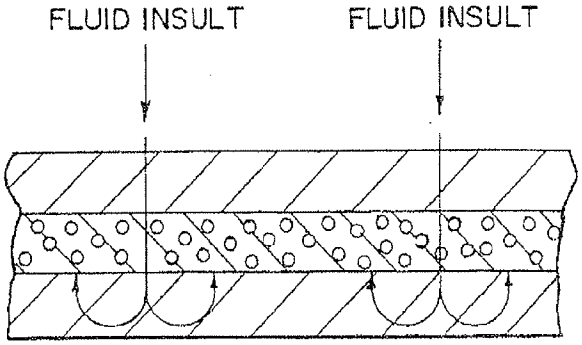

REFERENCES CITED IN THE DESCRIPTION

This list of references cited by the applicant is for the reader's convenience only. It does not form part of the European patent document. Even though great care has been taken in compiling the references, errors or omissions cannot be excluded and the EPO disclaims all liability in this regard.

Patent documents cited in the description

- US 5147343 A **[0015]**
- US 5378528 A **[0015]**
- US 5795439 A **[0015]**
- US 5807916 A **[0015]**
- US 5849211 A **[0015]**
- US 2929154 A **[0015]**
- US 3224986 A **[0015]**
- US 3332909 A **[0015]**
- US 4076673 A **[0015]**
- US 5527171 A **[0021]**

(19) Europäisches Patentamt
European Patent Office
Office européen des brevets

(11) EP 2 298 258 A1

(12) EUROPEAN PATENT APPLICATION

(43) Date of publication:
23.03.2011 Bulletin 2011/12

(51) Int Cl.:
A61F 13/15 (2006.01)

(21) Application number: 10251551.7

(22) Date of filing: 03.09.2010

(84) Designated Contracting States:
AL AT BE BG CH CY CZ DE DK EE ES FI FR GB GR HR HU IE IS IT LI LT LU LV MC MK MT NL NO PL PT RO SE SI SK SM TR
Designated Extension States:
BA ME RS

(30) Priority: 04.09.2009 US 554047

(71) Applicant: Johnson & Johnson Industria e Comercio Ltda.
12237-350 Sao Paulo (BR)

(72) Inventors:
- Bissah, Kofi
Somerset, New Jersey 08873 (US)
- Davies, Paul
Hillsborough, New Jersey 08844 (US)
- Hernandez, Francisco J. V.
CEP 12242-530,
São Paulo (BR)
- Paques, Fernanda Wiermann
São Paulo (BR)

(74) Representative: Kirsch, Susan Edith
Carpmaels & Ransford
One Southampton Row
London
WC1B 5HA (GB)

(54) Absorbent article including an absorbent core layer having a material free zone and a transfer layer arranged below the absorbent core layer

(57) The present invention generally relates to absorbent articles and in particular to an absorbent article including a liquid permeable cover layer, a liquid impermeable barrier layer, an absorbent core arranged adjacent to the cover layer, a transfer layer arranged between the core and the barrier layer, the absorbent core including an upper surface and a lower surface and a material-free zone extending from the upper surface to the lower surface.

EP 2 298 258 A1

Description

FIELD OF INVENTION

[0001] The present invention generally relates to absorbent sanitary napkins and in particular to a sanitary napkin that has superior transverse and longitudinal wicking characteristics, as well as superior fluid penetration time and rewet properties.

BACKGROUND OF THE INVENTION

[0002] In order for a sanitary napkin to efficiently absorb a large amount of fluid during use it must effectively wick fluid throughout the absorbent structure of the napkin. In the absence of effective wicking properties menstrual fluid tends to pool in certain regions of the napkin as a result of which the full absorbent capacity of the napkin is not effectively utilized. Accordingly, the inventors of the present invention have recognized a need to provide a sanitary napkin that efficiently wicks fluid in the longitudinal and transverse directions of the napkin to thereby fully utilize the full absorbent capacity of the napkin, while also providing superior fluid penetration time and rewet properties.

SUMMARY OF THE INVENTION

[0003] In view of the foregoing, the present invention provides, according to first aspect of the invention, an absorbent article including a longitudinally extending centerline, a transversely extending centerline, a liquid permeable cover layer having a body facing surface, a liquid impermeable barrier layer, an absorbent core arranged adjacent to the cover layer, a transfer layer arranged between the absorbent core and the barrier layer, the absorbent core including an upper surface and a lower surface and a material-free zone extending from the upper surface to the lower surface, and the cover layer including a first region arranged in spaced relationship to the transfer layer and a second region arranged in surface to surface contact with the transfer layer.

[0004] The present invention provides, according to a second aspect of the invention, an absorbent article including a longitudinally extending centerline, a transversely extending centerline, a liquid permeable cover layer having a body facing surface, a liquid impermeable barrier layer, a primary absorbent core arranged adjacent to the cover layer, a secondary absorbent core arranged adjacent to the primary absorbent core, a transfer layer arranged between the secondary absorbent core and the barrier layer, the first and second absorbent cores including an upper surface and a lower surface and a material-free zone extending from the upper surface to the lower surface, and the cover layer including a first region arranged in spaced relationship to the transfer layer and a second region arranged in surface to surface contact with the transfer layer.

[0005] The present invention provides, according to third aspect of the invention, an absorbent article including a longitudinally extending centerline, a transversely extending centerline, a liquid permeable cover layer having a body facing surface, a liquid impermeable barrier layer, an absorbent core arranged adjacent to the cover layer, a transfer layer arranged between the absorbent core and the barrier layer, the absorbent core including an upper surface and a lower surface, the absorbent core including a plurality of beams and a plurality of material-free zones, each of the beams arranged in a spaced relationship to an adjacent beam and each of the beams being separated from an adjacent beam by a material-free zone, each of the material-free zones extending from the upper surface to the lower surface, the cover layer including a plurality of first regions arranged in spaced relationship to the transfer layer and a plurality of second regions, each of the second regions located between two adjacent beams and arranged in surface to surface contact with the transfer layer.

BRIEF DESCRIPTION OF THE DRAWINGS

[0006] Examples of embodiments of the present invention will now be described with reference to the drawings, in which:

Fig. 1 is a top perspective view of an absorbent article according to the present invention;
Fig. 2 is a bottom perspective view of the absorbent article shown in Fig. 1;
Fig. 3 is an exploded view of the absorbent article shown in Fig. 1 according to a first embodiment of the invention;
Fig. 4 is sectional view of the absorbent article shown in Fig. 1 taken along line 4-4 in Fig. 1;
Fig. 5 is partially cut-away perspective view of the absorbent article shown in Fig. 1 schematically depicting the path of fluid flow within the article;
Fig. 6 is an exploded view of the absorbent article shown in Fig. 1 according to a second embodiment of the invention;
Fig. 7 is a sectional view of the absorbent article shown in Fig. 6 taken along line 7-7 in Fig. 6;
Fig. 8 is a top perspective view of an absorbent article according to a third embodiment of the present invention;

Fig. 9 is an exploded view of the absorbent article shown in Fig. 8;

Fig. 10 is a sectional view taken of the absorbent article shown in Fig. 8 taken along line 10-10 in Fig. 8;

Fig. 11 is a top elevation view of a test plate used to measure the Longitudinal Wicking Value (LWV), Transverse Wicking Value (TWV), and Fluid Penetration Time (FPT) of an absorbent article; and

Fig. 12 is a schematic view depicting a stained absorbent article according to the present invention and the manner in which the Longitudinal Wicking Value (LWV) and Transverse Wicking Value (TWV) are measured.

DETAILED DESCRITION OF THE INVENTION

[0007] The present invention generally relates to disposable absorbent articles such as sanitary napkins, pantiliners, absorbent products for incontinence, and other disposable absorbent articles worn close to a wearer's body. Although the invention will be described herein with reference to a sanitary napkin, the invention may be utilized with other disposable sanitary absorbent articles such as absorbent products for incontinence, diapers, pantiliners and the like.

[0008] Absorbent articles according to the present invention provide superior fluid handling characteristics, and more specifically provide superior longitudinal and transverse wicking characteristics, as well as superior fluid penetration time and rewet properties.

[0009] As shown in Figs. 1-4, the present invention relates to a sanitary napkin 10 for absorbing bodily fluids. The sanitary napkin 10 includes a body facing surface 11, a garment facing surface 13, a longitudinally extending centerline 15, and a transversely extending centerline 17.

[0010] As best seen in the exploded view shown in Fig. 3, the sanitary napkin 10 includes a fluid permeable cover layer 12, an absorbent core 14, a transfer layer 16, and a fluid impermeable barrier layer 18. As shown in Fig. 3, the absorbent core 14 is arranged adjacent to the cover layer 12 and the transfer layer 16 is arranged between the absorbent core 14 and the barrier layer 18.

[0011] The absorbent core 14 includes a material-free zone 20 that is devoid of any absorbent material. The material-free zone 20 extends from an upper surface 19 of the absorbent core 14 to a lower surface 21 of the absorbent core 14. The material-free zone 20 may be formed by any known method such as cutting or the like. In the specific embodiment of the invention shown in Figs. 1-4 the material-free zone 20 is centrally aligned with respect to the longitudinally extending centerline 15 and the transversely extending centerline 17. In the specific embodiment of the invention shown in Figs. 1-4, the material-free zone 20 is substantially elliptical in shape and preferably has a length as measured along the longitudinally extending centerline 15 in the range of about 40 mm to about 160 mm and a width as measured along the transversely extending centerline 17 of about 10 mm to about 60 mm. The material-free zone 20 preferably extends over a surface area in the range of between 400 mm^2 and about 6000 mm^2.

[0012] As best seen in Fig. 4, the cover layer 12 includes a first region 22 located outside the area of the material-free zone 20 that is arranged in spaced relationship to the transfer layer 16. The cover layer 12 includes a second region 24 within the area defined by the material-free zone 20 that is arranged in surface to surface contact with the transfer layer 16. The surface to surface contact of the cover layer 12 with the transfer layer 16 essentially defines a gutter 29 in the body facing surface 11 of the napkin 10. The absorbent core 14 preferably has a thickness of between about 0.5 mm and about 20 mm. The depth of the gutter 29 is in the range of between about 0.5 mm and about 20 mm. The thickness and depth measurements set forth in this paragraph may be determined by using a suitable thickness gauge such as the Mitutoyo Absolute Gauge or equivalent.

[0013] Reference is made to Fig. 5 which depicts the manner in which fluid is conveyed within the absorbent structure of a napkin 10 according to the present invention. As shown, the transfer layer 16 directly receives fluid from the cover layer 12 in the area of the material-free zone 20. The transfer layer 16 then wicks the fluid in the longitudinal and transverse directions of the napkin until the fluid can be conveyed upward and absorbed into the absorbent core 14.

[0014] Reference is made to Fig. 6 which depicts an exploded view of a sanitary napkin 10a according to a second embodiment of the present invention. The sanitary napkin 10a is similar in structure to the sanitary napkin 10 described above but further includes a secondary absorbent core 26 arranged between the primary absorbent core 14 and the transfer layer 16. As shown, the secondary absorbent core 26 includes a material-free zone 28 that corresponds in size and shape to the material-free zone 20 of the primary absorbent core 14. The material-free zone 28 extends from an upper surface 35 of the secondary absorbent core 26 to a lower surface 37 of the secondary absorbent core 26.

[0015] Referring to Fig. 7, the cover layer 12 includes a first region 22 located outside the area of the material-free zones 20 and 28 that is arranged in spaced relationship to the transfer layer 16 and the cover layer includes a second region 24 within area of the material-free zones 20 and 28 that is arranged in surface to surface contact with the transfer layer 16. The surface to surface contact of the cover layer 12 with the transfer layer 16 essentially defines a gutter 29 in the body facing surface of the napkin 10. The primary absorbent core 14 and the secondary absorbent core 26 preferably each has a thickness of between about 0.5 mm and about 20 mm. The depth of each gutter 29 is in the range of between about 1.0 mm and about 40 mm.

[0016] Reference is made to Figs. 8-10 which depict a sanitary napkin 10b according to a third embodiment of the

present invention. As shown in Fig. 9, the sanitary napkin 10b includes a includes a fluid permeable cover layer 12, an absorbent core 14, a transfer layer 16, and a fluid impermeable barrier layer 18. As shown in Fig. 9, the absorbent core 14 is arranged adjacent to the cover layer 12 and the transfer layer 16 is arranged between the absorbent core 14 and the barrier layer 18.

[0017] As best seen in the exploded view shown in Fig. 9, the absorbent core 14 includes a plurality of longitudinally extending material-free zones 20 that extend from an upper surface 19 of the absorbent core 14 to a lower surface 21 of the absorbent core 14. Each of the material-free zones 20 preferably has a width in the range of between 1 mm and about 10 mm and a length in the range of between about 50 mm and about 250 mm. Absorbent articles according to the third embodiment of the present invention preferably have between about 2 and about 7 longitudinally extending material-free zones 20. Each of the material free zones 20 is spaced from an adjacent material-free zone 20 in the transverse direction by a distance from about 5 mm to about 30 mm. Each of the material-free zones 20 preferably extends over a surface area in the range of between about 50 mm^2 and about 4000 mm^2. In the particular embodiment of the invention shown in the Figs. 8-10 the material-free zones 20 are linear in shape, parallel to each other, and equally spaced.

[0018] The absorbent core 14 further includes a plurality of longitudinally extending beams 25, each of the beams 25 being arranged in spaced relationship to an adjacent beam 25 and each of the beams 25 being separated from an adjacent beam 25 by one of the material-free zones 20.

[0019] As best seen in Fig. 10, the cover layer 12 includes a plurality of first regions 22 that are arranged in spaced relationship to the transfer layer 16 and a plurality of second regions 24 that are arranged in surface to surface contact with the transfer layer 16. The surface to surface contact of the cover layer 12 with transfer layer 16 in the second regions 24 essentially define a plurality of longitudinally extending gutters 29 in the body facing surface 11 of the napkin 10 that are coextensive with the path of the material-free zones 20. The absorbent core 14 preferably has a thickness of between about 0.5 mm and about 20 mm. The depth of each gutter 29 is in the range of between about 0.5 mm and about 20 mm.

[0020] Although not shown in the Figures, the sanitary napkin 10b may be provided with a secondary absorbent core arranged between the primary core 14 and the transfer layer 16, the secondary absorbent core including a plurality of material-free zones that correspond in shape and size to the material-free zones of the primary core 14.

[0021] Although not shown in the Figures, the areas of the napkin in which the gutters 29 are located may be colored a different color than the remainder of the absorbent article. For example, the areas in which the gutters 29 are located may be colored blue while the remainder of the napkin is generally white. By coloring the gutters 29 a different color than the remainder of the napkin, the enhanced wicking characteristics provided by the gutters 29 are visually communicated to a potential user of the absorbent article. The color may be imparted to the napkin by providing a color (e.g., ink) to the cover layer 12 and/or the transfer layer 16 and/or the barrier layer 18.

Cover Layer

[0022] The cover layer 12 may be a relatively low density, bulky, high-loft, non-woven web material. The cover layer 12 may be composed of only one type of fiber, such as polyester or polypropylene or it may include a mixture of more than one fiber. The cover may be composed of bi-component or conjugate fibers having a low melting point component and a high melting point component. The fibers may be selected from a variety of natural and synthetic materials such as nylon, polyester, rayon (in combination with other fibers), cotton, acrylic fiber and the like and combinations thereof. Preferably, the cover layer 12 has a basis weight in the range of about 10 gsm (g/m^2) to about 75 gsm (g/m^2).

[0023] Bi-component fibers may be made up of a polyester layer and a polyethylene sheath. The use of appropriate bi-component materials results in a fusible non-woven fabric. Examples of such fusible fabrics are described in U.S. Pat. No. 4,555,430 issued Nov. 26, 1985 to Chicopee. Using a fusible fabric increases the ease with which the cover layer may be mounted to the absorbent layers of the article and/or to the barrier layer.

[0024] The cover layer 12 preferably has a relatively high degree of wettability, although the individual fibers comprising the cover may not be particularly hydrophilic. The cover material should also contain a great number of relatively large pores. This is because the cover layer 12 is intended to take-up body fluid rapidly and transport it away from the body and the point of deposition. Therefore, the cover layer contributes little to the time taken for the napkin to absorb a given quantity of liquid (penetration time).

[0025] Advantageously, the fibers which make up the cover layer 12 should not lose their physical properties when they are wetted, in other words they should not collapse or lose their resiliency when subjected to water or body fluid. The cover layer 12 may be treated to allow fluid to pass through it readily. The cover layer 12 also functions to transfer the fluid quickly to the underlying layers of the napkin. Thus, the cover layer 12 is advantageously wettable, hydrophilic and porous. When composed of synthetic hydrophobic fibers such as polyester or bi-component fibers, the cover layer 12 may be treated with a surfactant to impart the desired degree of wettability.

[0026] Alternatively, the cover layer 12 can be made of a polymer film having large pores. Because of such high porosity, the film accomplishes the function of quickly transferring body fluid to the underlying absorbent layers. A suitable

cover material of this type is commercially found on the STAYFREE Dry Max Ultrathin product distributed by McNeil-PPC, Inc.

[0027] The cover layer 12 may be attached to the underlying absorbent core 14, transfer layer 16, and/or the barrier layer 18, by adhesion and/or other suitable means known to those of skill in the art.

Absorbent Core

[0028] In one embodiment, the absorbent core 14 is a blend or mixture of cellulosic fibers and superabsorbent polymer disposed therein. Cellulosic fibers that can be used in the absorbent core 14 are well known in the art and include wood pulp, cotton, flax and peat moss. Wood pulp is preferred. Pulps can be obtained from mechanical or chemi-mechanical, sulfite, kraft, pulping reject materials, organic solvent pulps, etc. Both softwood and hardwood species are useful. Softwood pulps are preferred. It is not necessary to treat cellulosic fibers with chemical debonding agents, cross-linking agents and the like for use in the present material. Some portion of the pulp may be chemically treated as discussed in U.S. Pat. No. 5,916,670 to improve flexibility of the product. Flexibility of the material may also be improved by mechanically working the material or tenderizing the material.

[0029] The absorbent core 14 can contain any superabsorbent polymer (SAP) which are well known in the art. For the purposes of the present invention, the term "superabsorbent polymer" (or "SAP") refers to materials which are capable of absorbing and retaining at least about 10 times their weight in body fluids under a 0.5 psi pressure. The superabsorbent polymer particles of the invention may be inorganic or organic crosslinked hydrophilic polymers, such as polyvinyl alcohols, polyethylene oxides, crosslinked starches, guar gum, xanthan gum, and the like. The particles may be in the form of a powder, grains, granules, or fibers. Preferred superabsorbent polymer particles for use in the present invention are crosslinked polyacrylates, such as the product offered by Sumitomo Seika Chemicals Co., Ltd. Of Osaka, Japan, under the designation of SA70N and products offered by Stockhausen Inc.. In a specific example, the absorbent core is a material containing from 95% to about 40% percent cellulosic fiber by weight, and about 5% to about 60% SAP by weight.

[0030] In one specific embodiment of the invention, the absorbent core 14 is constructed from a mixture of fluff pulp, commercially available as RAYFLOC J-LD-E from Rayonier Products, Jessup, Georgia, and superabsorbent polymer commercially available under the designation SA70N from Sumitomo Seika Chemicals Co., Ltd. Of Osaka, Japan, the mixture including 94 % fluff pulp by weight and 6% superabsorbent polymer by weight.

[0031] Materials particularly suitable for use as the absorbent core preferably have a basis weight in the range from about 300 gsm (g/m^2) to 1000 gsm (g/m^2), a thickness in the range of about 0.5 mm to 20 mm, and a density in the range of about 0.015 g/cc to 2 g/cc.

Transfer Layer

[0032] Adjacent to the barrier layer 18 layer on its inner side is the transfer layer 16. The transfer layer 16 provides the means of receiving body fluid from the cover layer 12 and holding it until the absorbent core 14 has an opportunity to absorb the fluid, and therefore serves as a fluid transfer or acquisition layer. In addition the transfer layer 16 functions to wick the fluid in the longitudinal and transverse directions of the napkin so that the full absorbent capacity of the napkin is utilized.

[0033] The transfer layer 16 preferably has a larger proportion of smaller pores than the cover layer 12. These attributes allow the transfer layer 16 to contain body fluid and hold it away from the outer side of the cover layer 12, thereby preventing the fluid from rewetting the cover layer 12 and its surface.

[0034] The transfer layer 16 may be composed of fibrous materials, such as wood pulp, polyester, rayon, flexible foam, or the like, or combinations thereof. Preferably, the transfer layer 16 is free of any superabsorbent polymer (SAP). The transfer layer 16 may also comprise thermoplastic fibers for the purpose of stabilizing the layer and maintaining its structural integrity. The transfer layer 16 may be treated with surfactant on one or both sides in order to increase its wettability, although generally the transfer layer 16 is relatively hydrophilic and may not require treatment. The transfer layer 16 is preferably bonded on both sides to the adjacent layers, i.e. the absorbent core 14 and the barrier layer 18.

[0035] Materials particularly suitable for use in the transfer layer 16 which the inventors have found contribute to reducing the penetration time have a density in the range of about 0.04 to 0.05 g/cc, a basis weight in the range from about 80 to 110 g/m^2 and a thickness in the range of about 1 to 3 mm. Examples of materials suitable for the first absorbent layer are through air bonded pulp sold by BUCKEYE of Memphis, Tenn. under the designation VIZORB 3008, which has a basis weight of 110 g/m ^{2}and VIZORB 3010, which has a basis weight of 90 g/m ^{2}.

Barrier Layer

[0036] Underlying the transfer layer 16 is a barrier layer 18 comprising liquid-impervious film material so as to prevent

liquid from egressing the sanitary napkin and staining the wearer's undergarment. The barrier layer 18 is preferably made of polymeric film, although it may be made of liquid-impervious, air-permeable material such as repellent-treated non-woven or micropore films or foams.

[0037] The barrier layer 18 may be breathable, i.e., permits vapor to transpire. Known materials for this purpose include nonwoven materials and microporous films in which microporosity is created by, inter alia, stretching an oriented film. Single or multiple layers of permeable films, fabrics, melt-blown materials, and combinations thereof that provide a tortuous path, and/or whose surface characteristics provide a liquid surface repellent to the penetration of liquids may also be used to provide a breathable backsheet. The cover layer 12 and the barrier layer 18 are preferably joined along their marginal portions so as to form an enclosure or flange seal that maintains the transfer layer 16 and absorbent core 14 captive. The joint may be made by means of adhesives, heat-bonding, ultrasonic bonding, radio frequency sealing, mechanical crimping, and the like and combinations thereof.

[0038] Positioning adhesive may be applied to a garment facing surface 13 of the barrier layer 18 for securing the napkin 10 to a garment during use. As seen in Fig. 2, the positioning adhesive may be covered with removable release paper 40 so that the positioning adhesive is covered by the removable release paper 40 prior to use.

[0039] Absorbent articles of this invention may or may not include wings, flaps or tabs for securing the absorbent article to an undergarment. Wings, also called, among other things, flaps or tabs, and their use in sanitary protection articles is described in U.S. Patent. No. 4,687,478 to Van Tilburg; U.S. Patent No. 4,589,876 also to Van Tilburg, U.S. Patent No. 4,900,320 to McCoy, and U.S. Patent No. 4,608,047 to Mattingly. As disclosed in the above documents, wings are generally speaking flexible and configured to be folded over the edges of the underwear so that the wings are disposed between the edges of the underwear.

Test Procedures

[0040] Absorbent articles according to the present invention possess a combination of unique functional properties. The test procedures set forth below highlight each of these functional properties. Prior to conducting any of the described test procedures described below the test product should be conditioned for two hours at 21 +/- 1° C and 50 +/- 2 % humidity.

Procedure for Longitudinal Wicking Value (LWV) and Transverse Wicking Value (TWV)

[0041] Absorbent articles according to the present invention exhibit superior wicking in the longitudinal and transverse directions of the article. The Longitudinal Wicking Value (LWV) and Transverse Wicking Value (TWV) test set forth below illustrates the superior wicking characteristics of absorbent articles according to the present invention.

[0042] Absorbent articles according to the present invention have preferably have LWV greater than 60, more preferably greater than 70, and most preferably greater than 75. Absorbent articles according to the present invention preferably have a TWV greater than 35, more preferably greater than 40, and most preferably greater than 45.

[0043] The synthetic test fluid described below is used in the test method described below. The synthetic test fluid is used in replacement of human menses due to its ease in preparation and accessibility of the ingredients.

[0044] The fluid is prepared by dissolving each of the following components into distilled water. Care should be taken to ensure that components are well dissolved. A rotating blade mixer or a magnetic stirrer should be used for mixing the components. In a large enough container, add the following components, making sure that the component is dissolved before adding the next one:

Quantity/1 L	Reagent	Grade, purity	Supplier	Catalog No.
9.0 g	sodium chloride	ACS reagent 99+%	Sigma-Aldrich	223514
490.5 g	distilled water	N/AP	N/AP	N/AP
10 g	2-phenoxyethanol	puriss. 99.0%	Sigma-Aldrich (Fluka)	77699
0.5 g	FD&C Red #40	Food	A&C	C3465
490.5 g	Glycerol	ACS reagent 99.5%	Sigma-Aldrich	G7893

[0045] The materials required to determine the LWV and TWV include the following:

- a poly(methylmethacrylate) (Plexiglas) template 200, shown in Fig. 11, having dimensions of 200 mm long x 60 mm wide x 12.7 mm thick and an elliptical orifice 202 (30.8 mm x 19 mm) in the center of the template;

- a calibrated electronic repeater pipette (Handy Step Electronic Repeating Pipet, Brandtech) with a 50 mL combi-syringe (or combi-tip) capable of delivering 5-10 mL at a rate of approximately 4 mL/s and fixed on a stand with the end of the tip placed vertically at 25.4 mm (1 inch) from the surface of the product;
- a calibrated stopwatch that has a precision of 0.01 s;
- a ruler graduated in millimeters (mm);
- a fine point permanent marker; and
- the test fluid prepared according to the procedure described above.

[0046] To obtain the LWV and TWV, the conditioned article is removed from its packaging, unfolded, placed on a flat surface (e.g. lab table). The Plexiglas plate 200 is placed and centered over the absorbent product, light hand applied pressure is applied to flatten the article, without compressing it, such that there is no substantial bending or folding of the article under the template 200.

[0047] A 50 mL combi-syringe (or combi-tip), placed on a repeater pipette, is filled with the test fluid, positioned vertically and fixed on a stand with the end of the tip placed approximately 1 inch from the surface of the product and above the center of the elliptical hole 202 of the plate. The article should be arranged such that the intersection of the longitudinally extending and transversely extending centerlines is positioned in the center of the hole 202. Then, 10 mL of test fluid is introduced to the article at a rate of approximately 4 mL/s. The stopwatch is started as soon as the repeating pipette button is pressed to dispense the volume. After 60 s, the plate is removed and the limits of the stain, along the longitudinally extending and transversely extending axes, are marked rapidly (within less than 10 s) with a marker. Only the continuous fluid stain limits found on the article cover are marked, fluid spots not continuous or linked to the rest of the fluid flow and/or observed in the lower layers of the absorbent product are not considered in the determination of the wicking distance. Using the furthest continuous points found along the longitudinally and transversely extending axes, a rectangle is drawn as shown in Fig. 12. The length of the rectangle measured in the longitudinal direction is the LWV and the length of the rectangle in the transverse direction is the TWV.

[0048] Thus the Longitudinal Wicking Value is the farthest continuous fluid displacement along the longitudinally extending centerline 15 of the article, and the Transverse Wicking Value is the farthest continuous fluid displacement along the transversely extending centerline 17. All distance values are measured with a ruler to a precision of 1 mm.

[0049] If the test fluid touches or runs over the edges of the plate 200 in the transverse direction within 60 s following the fluid injection, the sample is considered to have failed and a zero (0) TWV is attributed to that sample. If the absorbent article being tested is smaller than the test plate 200, then failure is defined as the moment when the fluid reaches the edges of the absorbent article in the transverse direction.

[0050] This procedure is repeated five times using three different samples of each type of absorbent article and an average LWV and TWV is calculated from these three repeats. If any of the five products fails, i.e. the fluid reaches the edges of the plate, then the reported average TWV is zero (0).

Procedure for Measuring Fluid Penetration Time (FPT)

[0051] Absorbent articles according to the present invention preferably have a fluid penetration time of less than 10 s, more preferably less than 8 s, and most preferably less than 5 s.

[0052] Fluid Penetration Time is measured by placing a sample to be tested under the template 200, shown in Fig. 11. The template 200 is arranged on the product sample so that the center of the elliptical orifice is aligned with the intersection of longitudinally extending centerline 15 and transversely extending centerline 17 of the product. The longitudinal axis of the elliptical orifice is aligned to the longitudinal axis of the product to be tested. Test fluid having the formula set forth above is utilized as the test fluid for the fluid penetration time procedure.

[0053] A graduated 10 ml syringe containing 7 ml of test fluid is held over the orifice plate such that the exit of the syringe is approximately 3 inches above the orifice. The syringe is held horizontally, parallel to the surface of the test plate. The fluid is then expelled from the syringe at a rate that allows the fluid to flow in a stream vertical to the test plate into the orifice and a stopwatch is started when the fluid first touches the sample to be tested. The stopwatch is stopped when a portion of the surface of the sample first becomes visible above the remaining fluid within the orifice. The elapsed time on the stopwatch is the Fluid Penetration Time. The average Fluid Penetration Time (FPT) is calculated from taking the average of three product samples.

Procedure for Measuring Rewet Potential

[0054] Absorbent articles according to the present invention preferably have a Rewet Potential of less than 1.0 g and more preferably less than 0.6 g.

[0055] The three product samples used for the Fluid Penetration Time (FPT) procedure described above are used for the Rewet Potential test described below.

[0056] The rewet potential is a measure of the ability of a napkin or other article to hold liquid within its structure when the napkin contains a relatively large quantity of liquid and is subjected to external mechanical pressure. The rewet potential is determined and defined by the following procedure.

[0057] The apparatus for the Rewet Potential test is the same as that set forth above with regard to the Fluid Penetration Time test and further includes a quantity of 3 inch X 4 inch rectangles of Whatman #1 filter paper (Whatman Inc., Clifton, NJ) and a weighing machine or balance capable of weighing to an accuracy of +/-0.001 g, a quantity of said Whatman paper, a standard weight of 2.22 kg (4.8 pounds) having dimensions 51 mm (2 inches) by 102 mm (4.0 inches) by approximately 54 mm (2.13 inches) which applies a pressure of 4.14 kPa (0.6 psi) over the 51 mm by 102 mm (2 inches by 4 inches) surface.

[0058] For purposes of the test procedure set forth herein, the same three product samples used for the fluid penetration test should be used for the rewet potential test. After the test fluid is applied within the orifice plate in the Fluid Penetration Time test described above, and as soon as the cover layer of the napkin first appears through the top surface of the fluid, the stopwatch is started and an interval of 5 minutes is measured.

[0059] After 5 minutes have elapsed, the orifice plate is removed and the napkin is positioned on a hard level surface with the cover layer facing upwards.

[0060] A fifteen (15) layer stack of the pre-weighed filter paper is placed on and centered over the wetted area and the standard 2.22 kg weight is placed on top of the filter paper. The filter paper and the weight are arranged over the absorbent article such that they are centered over the area to which the fluid was applied. The filter paper and the weight are arranged such that their longer dimensions are aligned with the longitudinal direction of the product. Immediately after placing the paper and weight on the product, the stopwatch is started and after a 3 minute interval has elapsed the standard weight and filter paper are quickly removed. The wet weight of the filter paper is measured and recorded to the nearest 0.001 grams. The rewet value is then calculated as the difference in grams between the weight of the wet 15 layers of filter paper and the dry 15 layers of filter paper.

[0061] The measurement should have at least three replicates and, if necessary, the weight is wiped clean before each run. The average rewet value (R) is then calculated from the three measured values.

EXAMPLES

Inventive Example

[0062] An inventive example of a sanitary napkin according to the present invention was constructed as follows.

[0063] The cover layer was a thermo bonded nonwoven cover having a basis weight of 16 gsm (g/m^2) (polypropylene fibers) commercially available from Polystar under product code 142250. The core facing surface of the cover was treated with a construction adhesive commercially available from Bostik-Findley under product code H-2900. The adhesive was applied in an amount of 5.0 gsm (g/m^2) over a 95 mm X 230 mm portion of the cover. The treated side of the cover was placed on top of an absorbent core. The absorbent core was constructed with a material free zone of the type shown in Fig. 1 having a width of 30 mm as measured along the transversely extending centerline of the article and length of 100 mm as measured along the longitudinally extending centerline of the article. The material free zone extended over a surface area of 2305.91 mm^2. The core had a thickness of 5.5 mm. The gutter defined by the material free zone had a depth of 4.4 mm. The absorbent core was constructed from 5.0 g of wood pulp commercially available from Georgia Pacific under product code 111410 and 0.4 g super absorbent polymer commercially available from Sumitomo Seika Ltd. under product code SA70. The core had a density of 0.103 g/cc. The transfer layer was constructed from a 75 gsm (g/m^2) airlaid commercially available from Buckeye of Memphis, Tenn. under product code X853-2. The transfer layer was placed on a polyethylene film barrier layer commercially available from Clopay under product code 113689. The transfer layer had a density of 0.058 g/cc.. The transfer layer was attached to the core by applying adhesive, code H-2900 from Bostik-Findley, in an amount of 5.0 gsm (g/m^2) over an area of 40 mm (width) by 100 mm (length). The transfer layer was attached to the barrier by applying adhesive, H-2900 from Bostik-Findley, in an amount of 3.6 gsm (g/m^2) over the surface of the barrier layer.

Comparative Example # 1

[0064] Comparative Example #1 was constructed from the same materials as described in the Inventive Example however the transfer layer was arranged between the cover layer and the core and the core was constructed as a solid layer, i.e. the core did not contain any material free zone.

Comparative Example #2

[0065] Comparative Example #2 was an Always Regular Maxi (lot #82434786421709 UPC3700030563).

[0066] Each of the Inventive Example, Comparative Example #1 and Comparative Example #2 were tested acccoring to the test methods described above and the results thereof are summarized in Table 1 provided below.

TABLE 1

(average of n = 3)	**Inventive Example**	**Comparative Example #1**	**Comparative Example #2**
Transverse Wicking Value (TWV)	49.6	32.2	30.4
Longitudinal Wicking Value (LWV)	79	50.6	50.4
Fluid Penetration Time (FPT)	4.3	11.9	2.9
Rewet Value	0.49	0.05	2.7

[0067] As illustrated in the table provided above absorbent articles according to the present invention provide superior fluid handling characteristics when compared to comparable prior art articles.

Claims

1. An absorbent article comprising:

   a longitudinally extending centerline;
   a transversely extending centerline;
   a liquid permeable cover layer having a body facing surface;
   a liquid impermeable barrier layer;
   an absorbent core arranged adjacent to the cover layer;
   a transfer layer arranged between the absorbent core and the barrier layer;
   wherein the absorbent core includes an upper surface and a lower surface and one or more material-free zones extending from the upper surface to the lower surface; and
   wherein the cover layer includes a first region arranged in spaced relationship to the transfer layer and a second region arranged in surface to surface contact with the transfer layer.

2. The absorbent article according to claim 1, wherein the material-free zone is centrally aligned with respect to the longitudinally extending centerline and the transversely extending centerline.

3. The absorbent article according to claim 1 or claim 2, wherein the material-free zone extends over an area between about 400 mm^2 and about 6000 mm^2.

4. The absorbent article according to any one of the preceding claims, wherein the material-free zone is substantially elliptical in shape and preferably has a length as measured along the longitudinally extending centerline in the range of about 40 mm to about 250 mm and a width as measured along the transversely extending centerline of about 10 mm to about 60 mm.

5. The absorbent article according to any one of the preceding claims, wherein the transfer layer, absorbent core and cover cooperate to define a longitudinally extending gutter in the body facing surface of the article, the gutter having a depth in the range of between about 0.5 mm and about 20 mm.

6. The absorbent article according to any one of the preceding claims, wherein the absorbent article has a TWV (Transverse Wicking Value) greater than 35.

7. The absorbent article according to any one of the preceding claims, wherein the absorbent article has a FPT (Fluid Penetration Time) less than 10 seconds.

8. The absorbent article according to any one of the preceding claims, further comprising a secondary absorbent core arranged between the absorbent core and the transfer layer, wherein the secondary absorbent core includes a material-free zone extending from an upper surface of the secondary absorbent core to a lower surface of the

secondary absorbent core, and wherein the material-free zone of the secondary absorbent core corresponds in size and shape to the material-free zone of the core.

9. The absorbent article according to claim 8, wherein the transfer layer, absorbent core, secondary absorbent core, and cover cooperate to define a longitudinally extending gutter in the body facing surface of the article, the gutter having a depth in the range of between about 1.0 mm and about 40 mm.

10. The absorbent article according to claim 1 wherein the absorbent core comprises a plurality of material-free zones, and additionally a plurality of beams, each of the beams arranged in a spaced relationship to an adjacent beam and each of the beams being separated from an adjacent beam by a material-free zone, each of the material-free zones extending from the upper surface to the lower surface; and
wherein the cover layer includes a plurality of first regions arranged in spaced relationship to the transfer layer and a plurality of second regions, each of the second regions located between two adjacent beams and arranged in surface to surface contact with the transfer layer.

11. The absorbent article according to claim 10, wherein each of the material-free zones preferably has a width in the range of between about 1 mm and about 10 mm and a length in the range of between about 40 mm and about 250 mm.

12. The absorbent article according to claim 10 or claim 11, wherein the absorbent article includes between 2 and about 7 longitudinally extending the material-free zones and each of the material free zones is spaced from an adjacent material-free zone in the transverse direction by a distance from about 5 mm to about 30 mm.

13. The absorbent article according to any one of claims 10 to 12, wherein each of the material-free zones extend over a surface area in the range of between 50 mm^2 and about 4000 mm^2.

14. The absorbent article according to any one of claims 10 to 13, wherein the transfer layer, absorbent core and cover cooperate to define a plurality of longitudinally extending gutters in the body facing surface of the article, each of the gutters having a depth in the range of between about 0.5 mm and about 20 mm.

15. The absorbent article according to any one of claims 10 to 14, wherein the absorbent article has a TWV (Transverse Wicking Value) greater than 40.

16. The absorbent article according to any one of claims 10 to 15, wherein the absorbent article has a FPT (Fluid Penetration Time) less than 5 seconds.

17. The absorbent article according to any one of the preceding claims, wherein the absorbent article has a LWV (Longitudinal Wicking Value) greater than 60.

18. The absorbent article according to any one of the preceding claims, wherein the absorbent article has Rewet Value less than 1 g.

19. The absorbent article according to any one of the preceding claims, wherein the transfer layer is free of superabsorbent material.

20. The absorbent article according to any one of the preceding claims, wherein the absorbent core comprises a mixture of cellulosic fiber and superabsorbent polymer, the absorbent core containing from about 95% to about 40% percent cellulosic fiber by weight, and about 5% to about 60% superabsorbent polymer by weight.

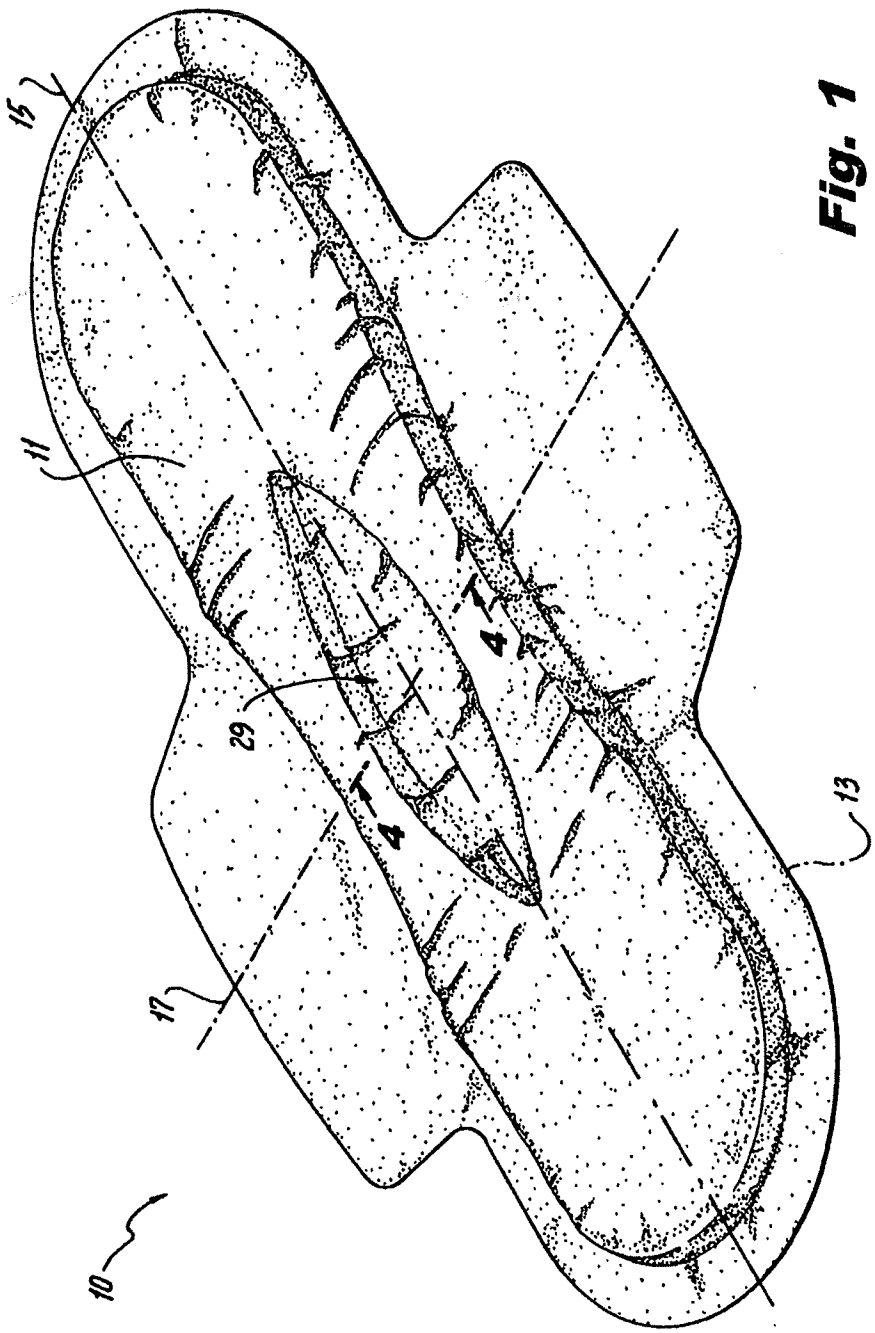

Fig. 1

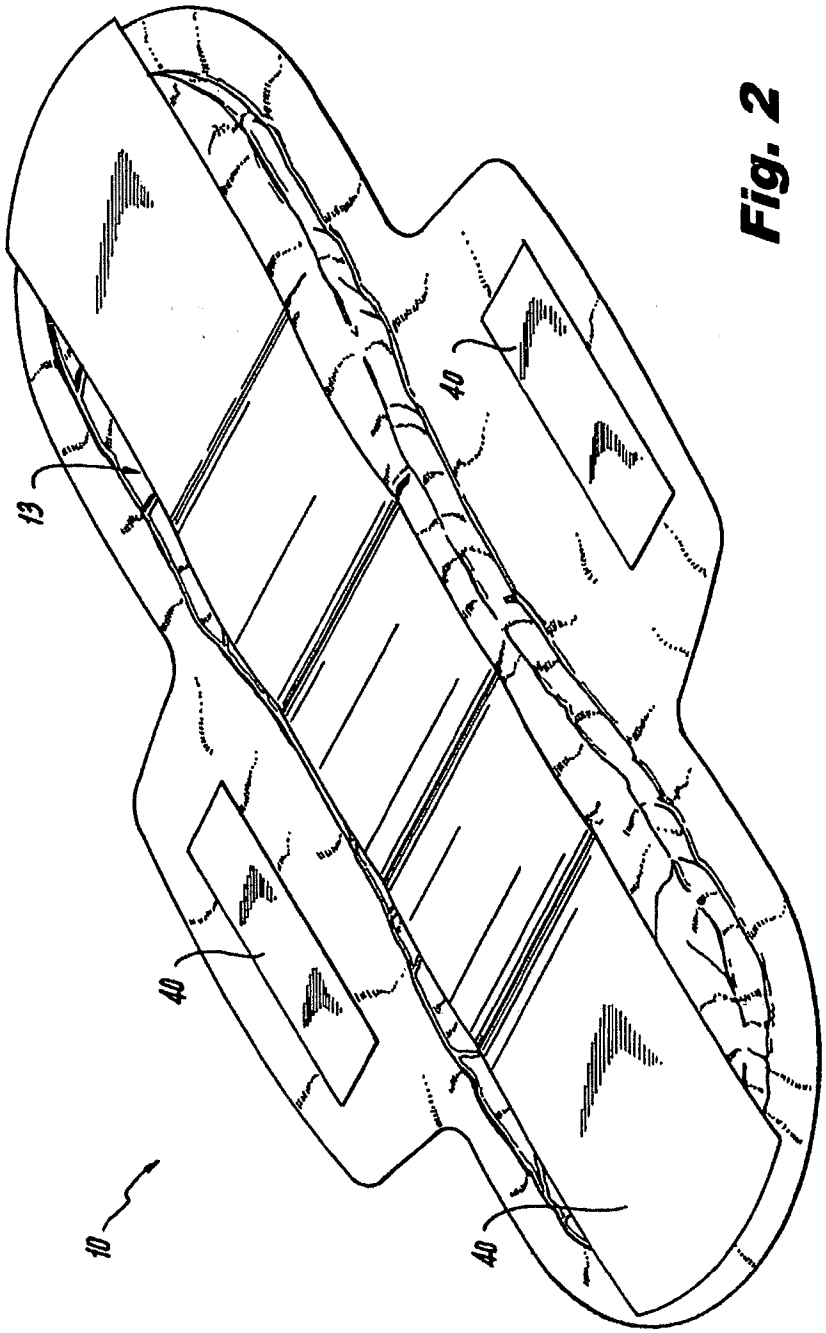

Fig. 2

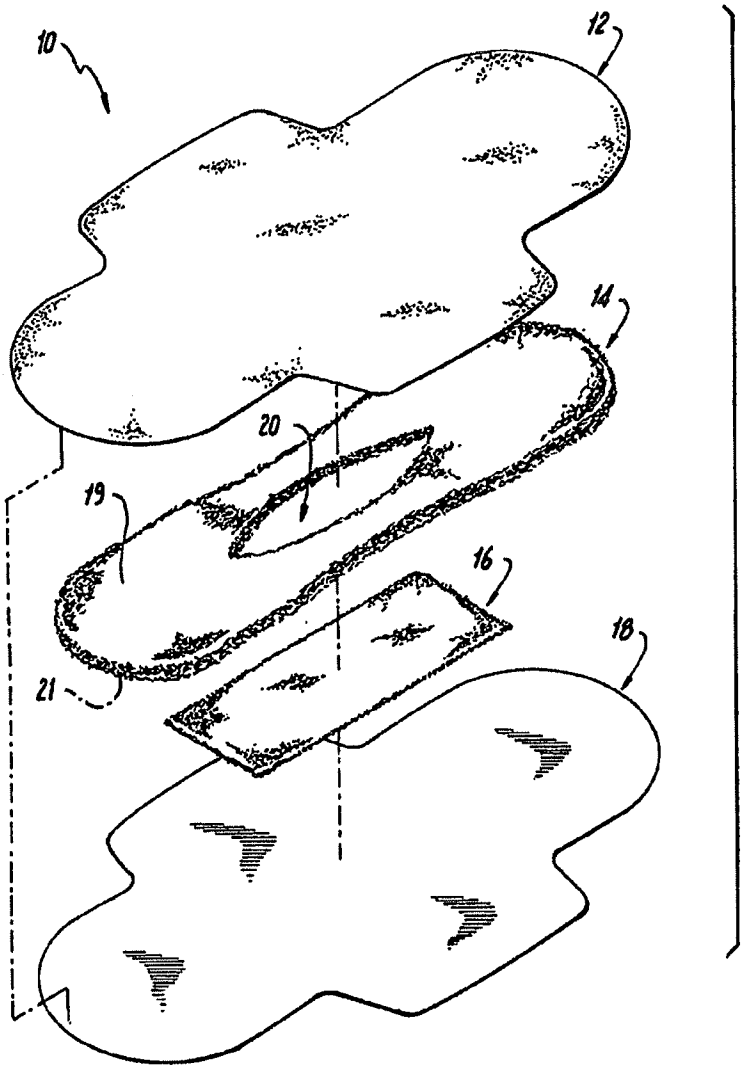

Fig. 3

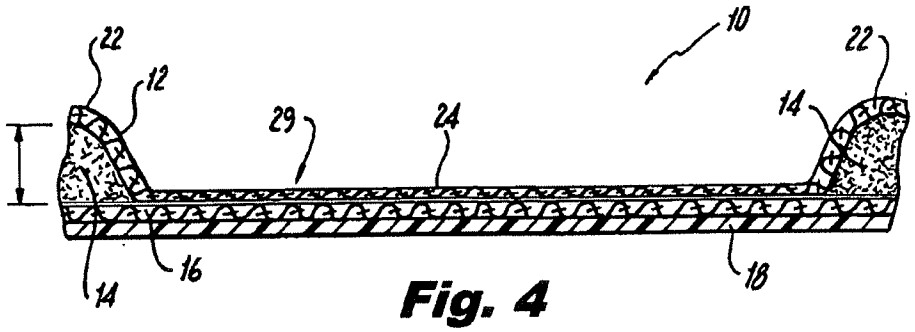

Fig. 4

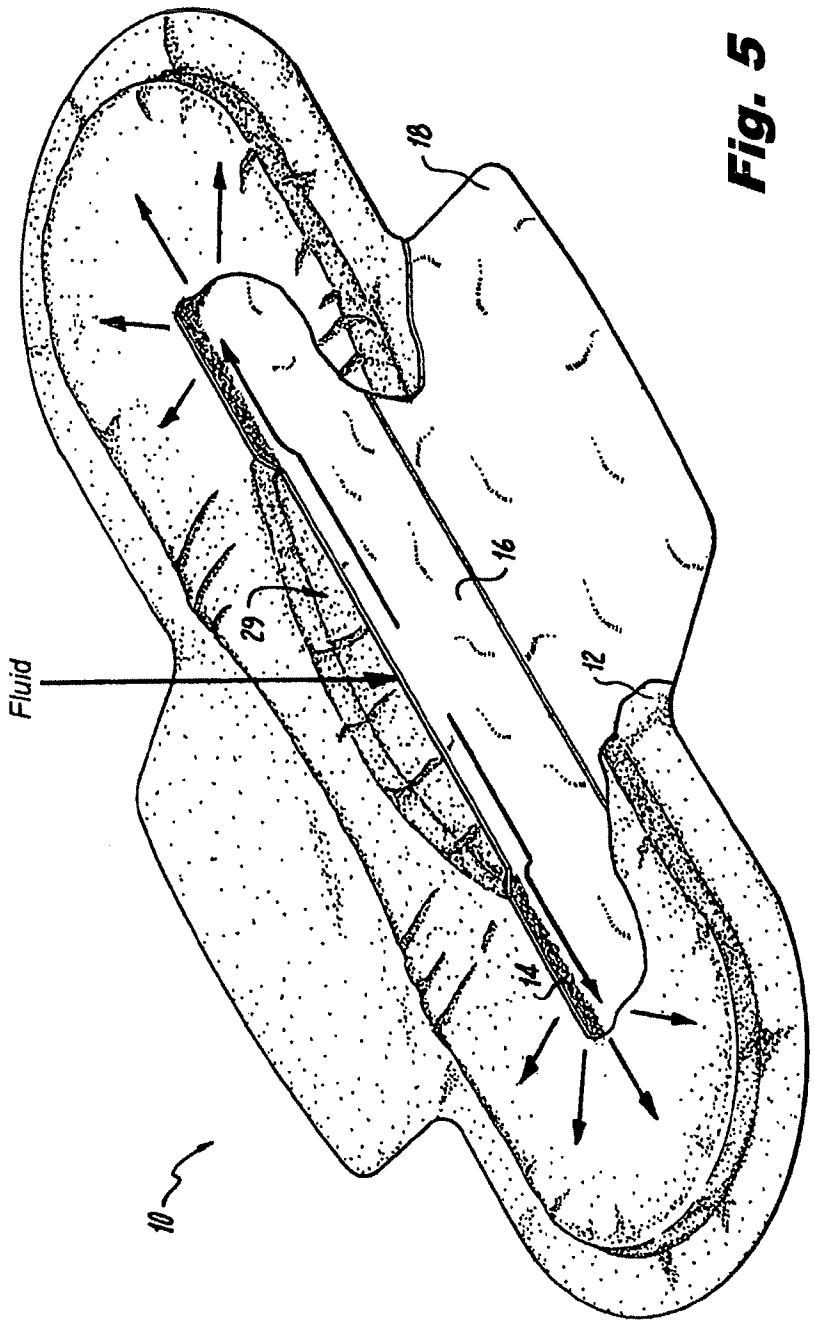

Fig. 5

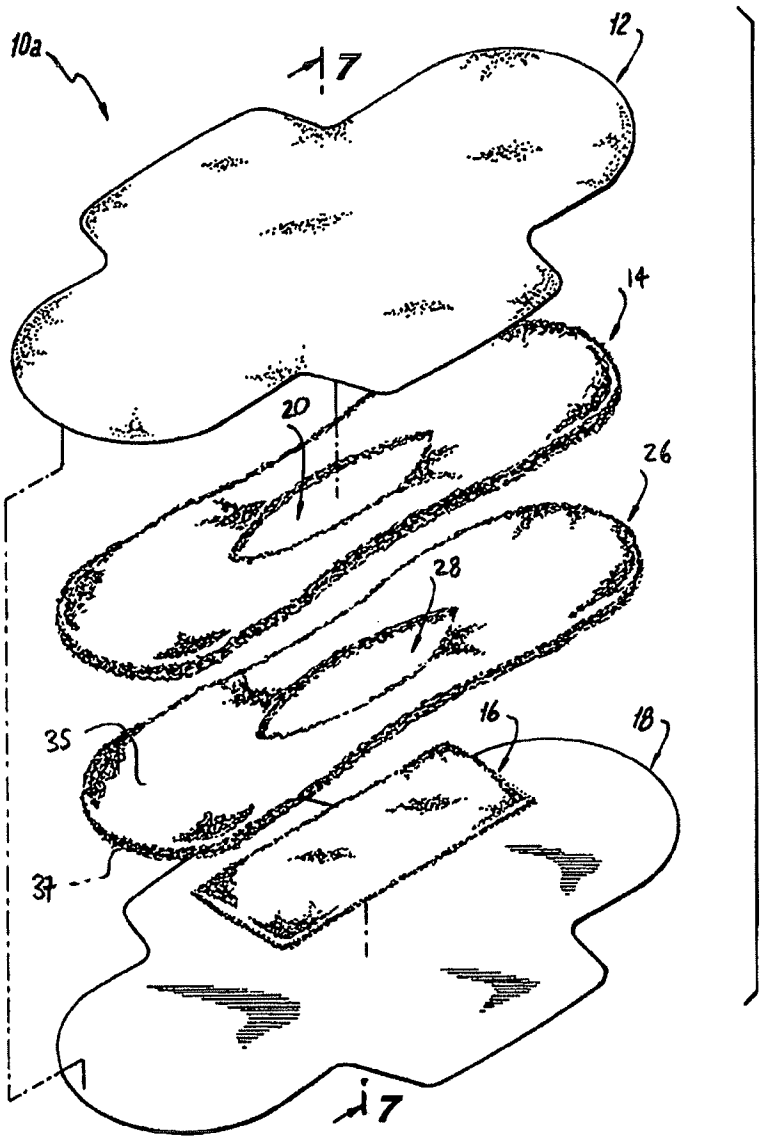

Fig. 6

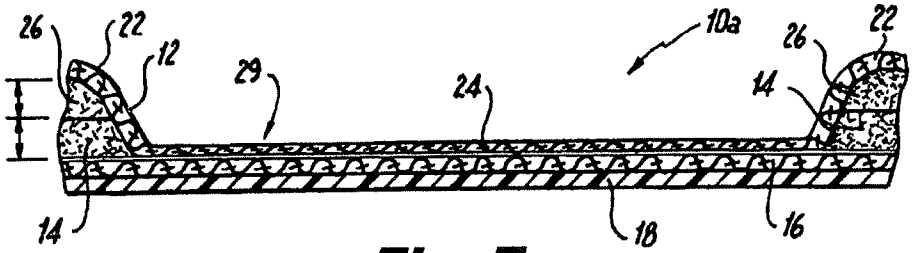

Fig. 7

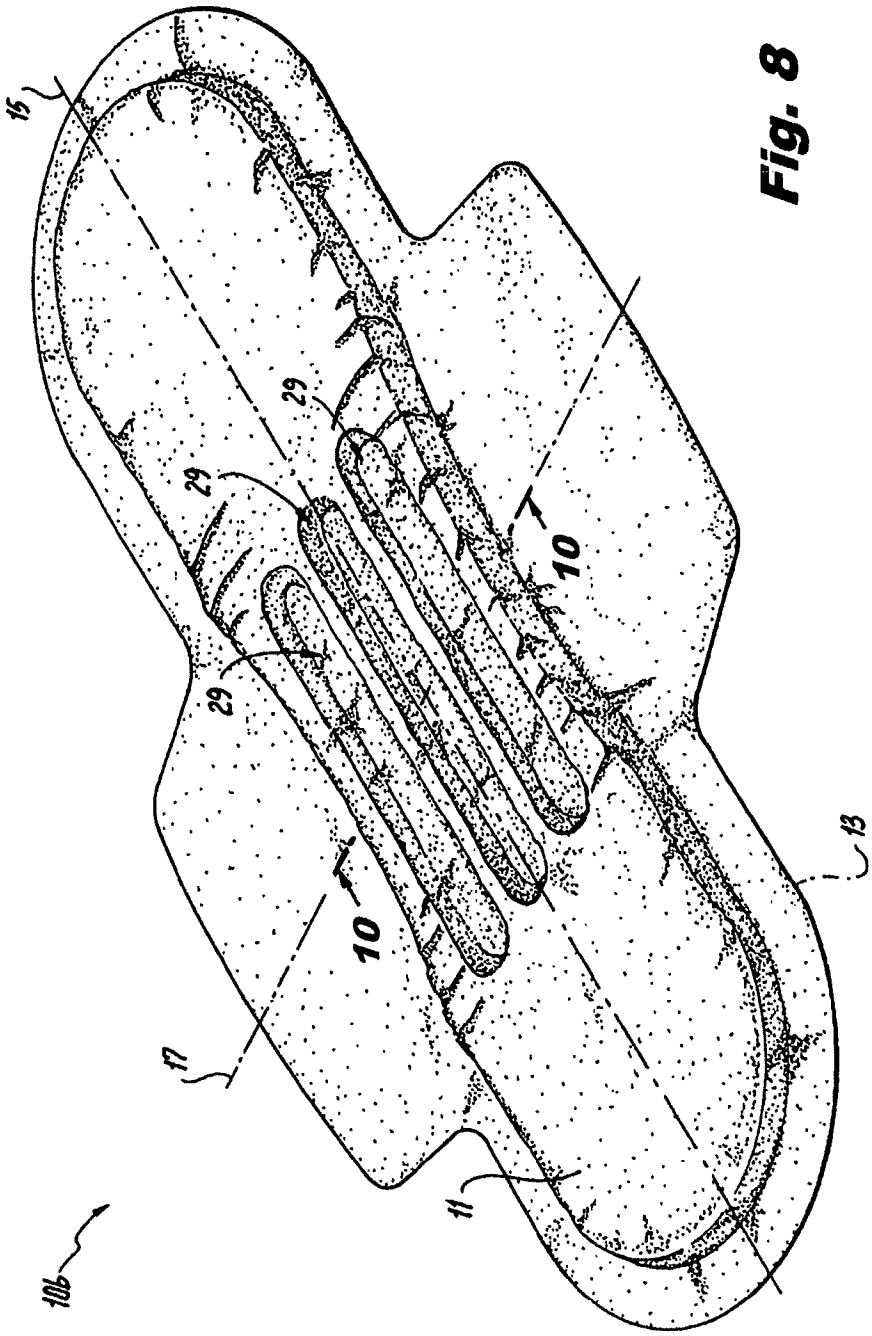

Fig. 8

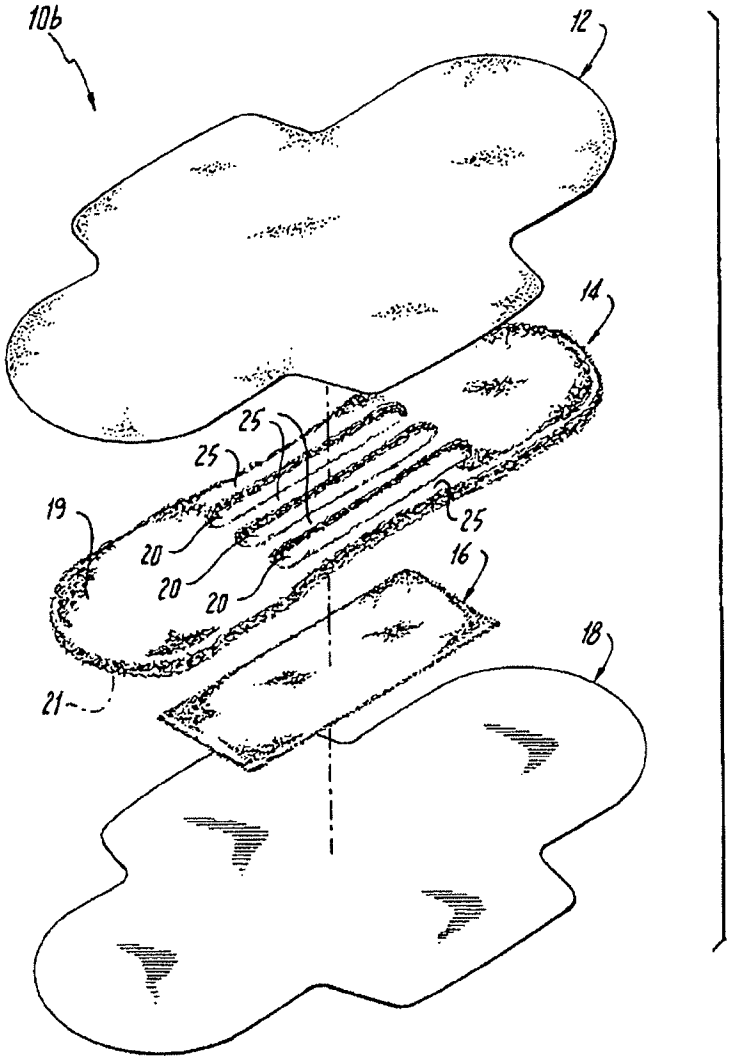
10b
12
14
25
25
25
19
20
20
20
16
18
21

Fig. 9

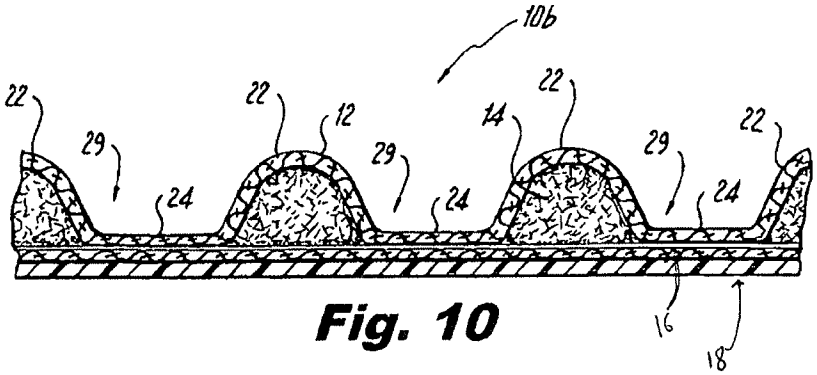
10b
22
22
12
14
22
22
29
29
29
24
24
24
16
18

Fig. 10

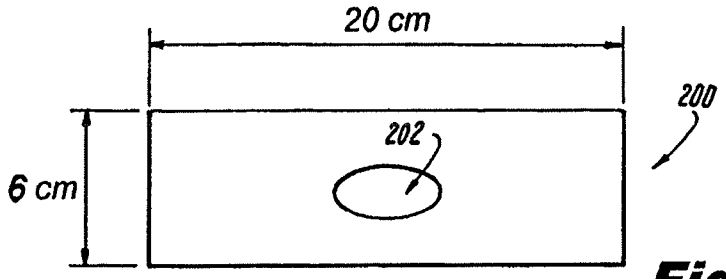

Fig. 11

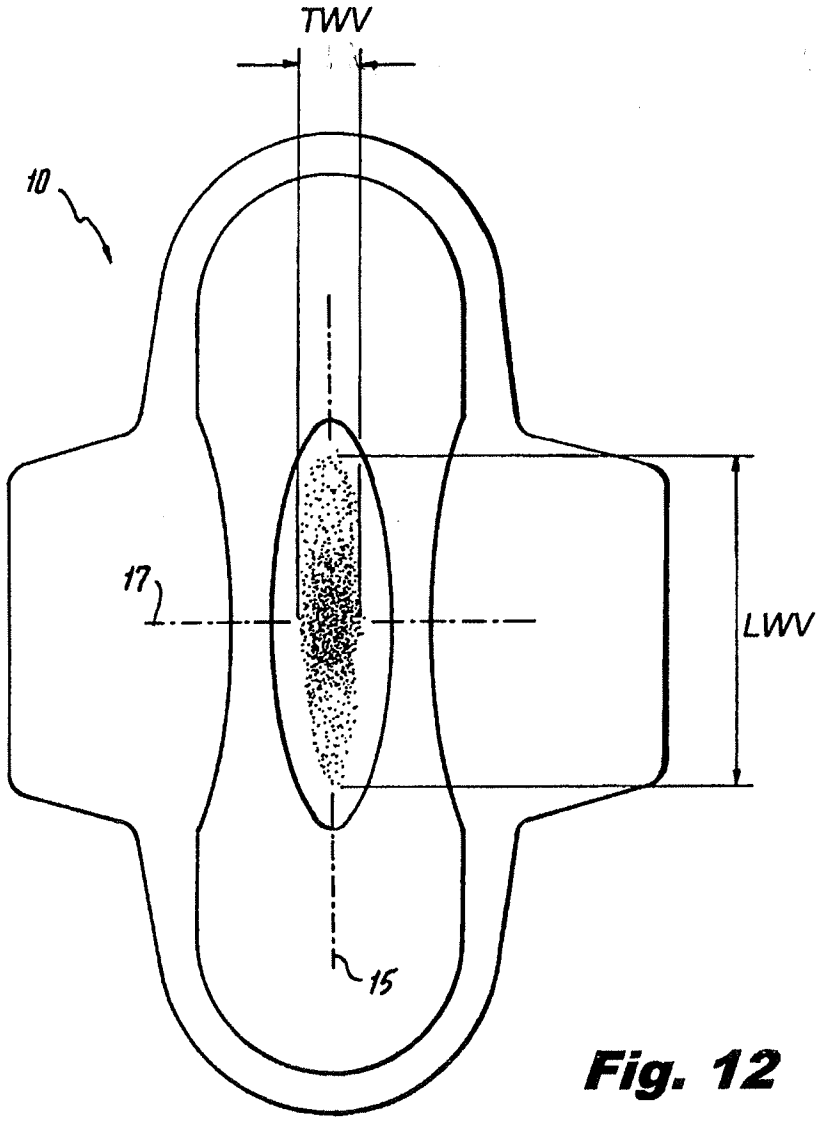

Fig. 12

Europäisches Patentamt
European Patent Office
Office européen des brevets

EUROPEAN SEARCH REPORT

Application Number
EP 10 25 1551

DOCUMENTS CONSIDERED TO BE RELEVANT

Category	Citation of document with indication, where appropriate, of relevant passages	Relevant to claim	CLASSIFICATION OF THE APPLICATION (IPC)
X	WO 91/09582 A1 (MOELNLYCKE AB [SE]) 11 July 1991 (1991-07-11)	1,2,4-7, 10-12, 14-19	INV. A61F13/15
Y	* page 6 - page 8; figures 2,4 *	3,8,9,13	

X	WO 86/01378 A1 (COLOPLAST AS [DK]) 13 March 1986 (1986-03-13)	1,2,4-7, 10-12, 14-20	
Y	* page 1, line 28 - line 30; figure 2 * * page 7, line 30 - page 7, line 31 * * page 11, line 13 - page 11, line 15 * * page 13, line 4 - page 13, line 5 *	3,8,9,13	

X	US 2003/045851 A1 (VARTIAINEN KENT [SE]) 6 March 2003 (2003-03-06) * figure 2c *	1	

TECHNICAL FIELDS SEARCHED (IPC)

A61F

The present search report has been drawn up for all claims

Place of search	Date of completion of the search	Examiner
Munich	13 January 2011	Gennari, Silvia

CATEGORY OF CITED DOCUMENTS

X : particularly relevant if taken alone
Y : particularly relevant if combined with another document of the same category
A : technological background
O : non-written disclosure
P : intermediate document

T : theory or principle underlying the invention
E : earlier patent document, but published on, or after the filing date
D : document cited in the application
L : document cited for other reasons

& : member of the same patent family, corresponding document

EPO FORM 1503 03.82 (P04C01)

ANNEX TO THE EUROPEAN SEARCH REPORT ON EUROPEAN PATENT APPLICATION NO. EP 10 25 1551

This annex lists the patent family members relating to the patent documents cited in the above-mentioned European search report.
The members are as contained in the European Patent Office EDP file on
The European Patent Office is in no way liable for these particulars which are merely given for the purpose of information.

13-01-2011

Patent document cited in search report		Publication date	Patent family member(s)			Publication date
WO 9109582	A1	11-07-1991	AU	6970191	A	24-07-1991
			SE	8904319	A	22-06-1991
WO 8601378	A1	13-03-1986	DE	3574224	D1	21-12-1989
			DK	154386	A	04-04-1986
			EP	0192687	A1	03-09-1986
			US	4840692	A	20-06-1989
US 2003045851	A1	06-03-2003	NONE			

EPO FORM P0459

For more details about this annex : see Official Journal of the European Patent Office, No. 12/82

REFERENCES CITED IN THE DESCRIPTION

This list of references cited by the applicant is for the reader's convenience only. It does not form part of the European patent document. Even though great care has been taken in compiling the references, errors or omissions cannot be excluded and the EPO disclaims all liability in this regard.

Patent documents cited in the description

- US 4555430 A, Chicopee **[0023]**
- US 5916670 A **[0028]**
- US 4687478 A, Van Tilburg **[0039]**
- US 4589876 A, Van Tilburg **[0039]**
- US 4900320 A, McCoy **[0039]**
- US 4608047 A, Mattingly **[0039]**

(12) INTERNATIONAL APPLICATION PUBLISHED UNDER THE PATENT COOPERATION TREATY (PCT)

(19) World Intellectual Property Organization
International Bureau

(43) International Publication Date
7 October 2004 (07.10.2004)

PCT

(10) International Publication Number
WO 2004/084784 A1

(51) International Patent Classification[7]: A61F 13/15, A61L 15/60, A61F 13/534

(21) International Application Number: PCT/SE2004/000048

(22) International Filing Date: 16 January 2004 (16.01.2004)

(25) Filing Language: English

(26) Publication Language: English

(30) Priority Data:
0300878-6 26 March 2003 (26.03.2003) SE

(71) Applicant *(for all designated States except US)*: **SCA HYGIENE PRODUCTS AB** [SE/SE]; S-405 03 Göteborg (SE).

(72) Inventors; and
(75) Inventors/Applicants *(for US only)*: **GUIDOTTI, Ted** [US/SE]; Anneholmsgatan 10, S-412 67 Göteborg (SE). **EDWARDSSON, Gunnar** [SE/SE]; Klarviksvägen 12, S-430 94 Bohus Björkö (SE). **ELIASSON, Malin** [SE/SE]; Vetekornsgatan 6, S-431 46 Mölndal (SE).

(74) Agent: **STRÖM & GULLIKSSON IP AB**; Wallenbergs gata 4, S-583 35 Linköping (SE).

(81) Designated States *(unless otherwise indicated, for every kind of national protection available)*: AE, AG, AL, AM, AT, AU, AZ, BA, BB, BG, BR, BW, BY, BZ, CA, CH, CN, CO, CR, CU, CZ, DE, DK, DM, DZ, EC, EE, EG, ES, FI, GB, GD, GE, GH, GM, HR, HU, ID, IL, IN, IS, JP, KE, KG, KP, KR, KZ, LC, LK, LR, LS, LT, LU, LV, MA, MD, MG, MK, MN, MW, MX, MZ, NA, NI, NO, NZ, OM, PG, PH, PL, PT, RO, RU, SC, SD, SE, SG, SK, SL, SY, TJ, TM, TN, TR, TT, TZ, UA, UG, US, UZ, VC, VN, YU, ZA, ZM, ZW.

(84) Designated States *(unless otherwise indicated, for every kind of regional protection available)*: ARIPO (BW, GH, GM, KE, LS, MW, MZ, SD, SL, SZ, TZ, UG, ZM, ZW), Eurasian (AM, AZ, BY, KG, KZ, MD, RU, TJ, TM), European (AT, BE, BG, CH, CY, CZ, DE, DK, EE, ES, FI, FR, GB, GR, HU, IE, IT, LU, MC, NL, PT, RO, SE, SI, SK, TR), OAPI (BF, BJ, CF, CG, CI, CM, GA, GN, GQ, GW, ML, MR, NE, SN, TD, TG).

Published:
— *with international search report*

[Continued on next page]

(54) Title: ABSORBENT ARTICLE COMPRISING AN ABSORBENT STRUCTURE

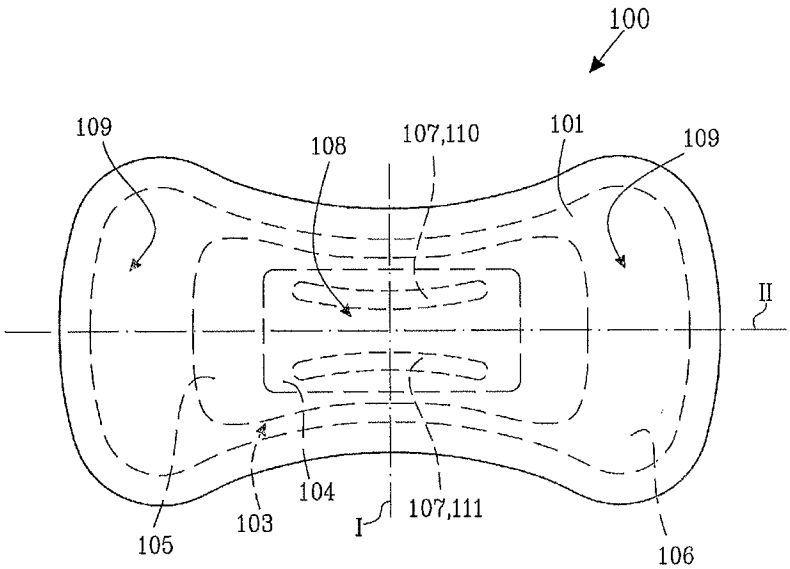

(57) Abstract: The invention relates to an absorbent article such as a diaper, an incontinence guard, a sanitary napkin or the like, whereby the article exhibits a liquid permeable upper surface and comprises an absorbent structure, which in the longitudinal direction exhibits a crotch portion and two end portions, wherein the absorbent structure comprises an acquisition layer and at least one first storage layer, wherein said first storage layer comprises at least 50 percent by weight of a super absorbent material calculated on the total weight of the first storage layer. The material of the first storage layer in a dry condition has a density exceeding 0.4 g/cm^3. Further, said first storage layer at least in the crotch portion of the absorbent structure exhibits apertures/recesses.

WO 2004/084784 A1

For two-letter codes and other abbreviations, refer to the "Guidance Notes on Codes and Abbreviations" appearing at the beginning of each regular issue of the PCT Gazette.

Absorbent article comprising an absorbent structure

Field of the invention

The present invention relates to an absorbent article such as a diaper, an incontinence guard, a sanitary napkin or the like, whereby the article exhibits a liquid permeable upper surface and comprises an absorbent structure, exhibiting a transversal direction and a longitudinal direction, wherein the absorbent structure comprises an acquisition layer and at least one first storage layer, wherein said first storage layer comprises cellulose fibres and at least 50 percent by weight of a super absorbent material calculated on the total weight of the storage layer.

Background

Absorbent articles such as diapers, incontinence guards, sanitary napkins, intended for one single use, are usually constructed by an absorbent structure having the capability to acquire large amounts of liquid under a short period of time, having further the ability to distribute the liquid and to store the liquid. This means that the absorbent structure usually comprises several different layers having different properties with respect to each other. Frequently, the absorbent structure at least comprises a liquid acquisition layer and a liquid storage layer. The liquid storage layer often comprises a cellulosic fluff pulp layer mixed with super absorbent material, which are polymers having the ability to absorb water or bodily fluids many times their own weight. The liquid acquisition layer often comprises a porous fibrous layer of synthetic fibres.

Upon usage of such absorbent articles it is desirable that they are thin and discrete to wear, and that they at the same time rapidly can acquire large amounts of liquids discharged under a short period of time and store this liquid in the article.

EP 0 532 002 relates to an absorbent structure, mainly for use in diapers and incontinence guards. The absorbent structure contains at least 30 percent by weight of a super absorbent material and the super absorbent material exhibits some ability to distribute liquid and resist compression during load. The purpose of the described absorbent structure is to obtain a thin structure having a sufficient absorption capability.

EP 0 752 892 relates to an absorbent structure, mainly for use in diapers and incontinence guards. The absorbent structure contains at least 60 percent by weight of a super absorbent material and the super absorbent material exhibits certain properties. The purpose of the described absorbent structure is to obtain a thin structure having a sufficient absorption capability.

However, it has still been shown that it is difficult to obtain sufficient liquid acquiring capacity, liquid distribution capacity and liquid storage capacity, which at the same time are thin and discrete to wear.

Description of the invention

According to the present invention, an article has been provided which is thin and discrete to wear, and at the same time the article exhibits sufficient liquid acquiring capacity, liquid distribution capacity and liquid storage capacity.

An absorbent article according to the invention is characterised mainly in that the material of the first storage layer in a dry condition, has a density exceeding 0.4 g/cm^3, and that said first storage layer exhibits apertures/recesses at least in the crotch portion of the absorbent structure.

Preferably, the material of the first storage layer in a dry condition is even more compressed and exhibits a density exceeding 0.5 g/cm^3. According to a further embodiment, the first storage layer exhibits a density exceeding 0.6 g/cm^3

According to an embodiment, the material of the first storage layer comprises at least 60 percent by weight of a super absorbent material, calculated on the total weight of the first storage layer in a dry condition. According to another embodiment, the material of the first storage layer comprises at least 70 percent by weight of a super absorbent material, calculated on the total weight of the first storage layer in a dry condition. The material of the first storage layer may also comprise 90 percent by weight or more of the super absorbent material, calculated on the total weight of the first storage layer in a dry condition. An advantage with such a high content of the super absorbent material is that a very thin and discrete article is obtained. *As the content of super absorbent material is high, the amount of the super absorbent material is also relatively high, which in turn leads to that a high absorption capacity and a high liquid storing capacity is achieved.*

According to an embodiment, the apertures/recesses extend through the entire thickness of the first storage layer.

According to an embodiment, the apertures/recesses extend along the longitudinal direction of the absorbent structure. Thus, the apertures/recesses create longitudinal channels in the first storage layer. One advantage with such longitudinal channels is that they direct the liquid transport in a direction towards the end portions of the absorbent structure.

Naturally, it is possible to have other physical designs of the apertures/recesses, for example the apertures/recesses could be circular or designed in a way that channels are obtained in the transversal direction of the absorbent structure. Using this construction, the first storage layer also functions as a forming element.

According to one embodiment the width of the material between the apertures/recesses, at least in the crotch portion, is maximally 20 mm. A material layer, which firstly comprises super