US 20080288748A1

(19) United States

(12) Patent Application Publication

(10) Pub. No.: US 2008/0288748 A1

(43) Pub. Date: Nov. 20, 2008

Sutardja et al.

(54) DYNAMIC CORE SWITCHING

(76) Inventors: **Sehat Sutardja**, Los Altos Hills, CA (US); **Hong-Yi Chen**, Fremont, CA (US); **Premanand Sakarda**, Acton, MA (US); **Mark N. Fullerton**, Austin, TX (US); **Jay Heeb**, Gilbert, AR (US)

Correspondence Address:
HARNESS, DICKEY & PIERCE P.L.C.
5445 CORPORATE DRIVE, SUITE 200
TROY, MI 48098 (US)

(21) Appl. No.: **12/215,760**

(22) Filed: **Jun. 30, 2008**

Related U.S. Application Data

(63) Continuation of application No. 12/145,660, filed on Jun. 25, 2008, which is a continuation-in-part of application No. 11/523,996, filed on Sep. 20, 2006.

(60) Provisional application No. 60/968,143, filed on Aug. 27, 2007, provisional application No. 60/978,936, filed on Oct. 10, 2007, provisional application No. 60/981,606, filed on Oct. 22, 2007, provisional application No. 61/022,431, filed on Jan. 21, 2008, provisional application No. 61/029,476, filed on Feb. 18, 2008, provisional application No. 61/049,641, filed on May 1, 2008, provisional application No. 61/058,050, filed on Jun. 2, 2008, provisional application No. 60/825,368, filed on Sep. 12, 2006, provisional application No. 60/823,453, filed on Aug. 24, 2006, provisional application No. 60/822,015, filed on Aug. 10, 2006.

Publication Classification

(51) **Int. Cl.**
G06F 15/80 (2006.01)
G06F 9/00 (2006.01)

(52) **U.S. Cl.** **712/20**; 712/E09.001

(57) **ABSTRACT**

A core switching system includes a mode switching module that receives a switch signal to switch operation between a first mode and a second mode. During the first mode, instructions associated with applications are executed by a first asymmetric core, and a second asymmetric core is inactive. During the second mode, the instructions are executed by the second asymmetric core, and the first asymmetric core is inactive. A core activation module stops processing of the applications by the first asymmetric core after interrupts are disabled. A state transfer module transfers a state of the first asymmetric core to the second asymmetric core. The core activation module allows the second asymmetric core to resume execution of the instructions and the interrupts are enabled.

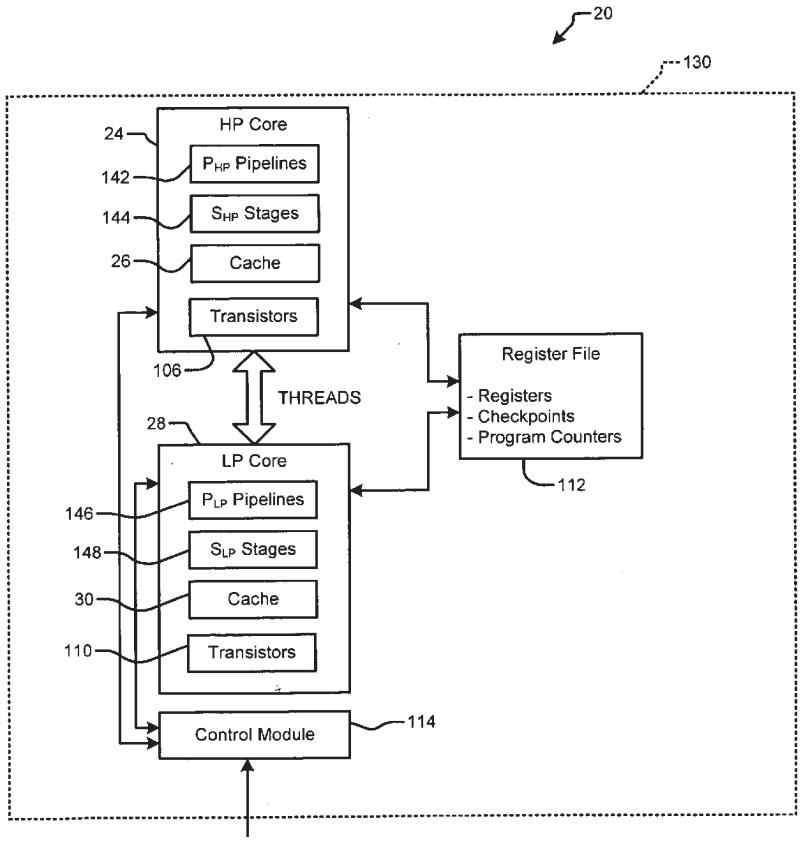

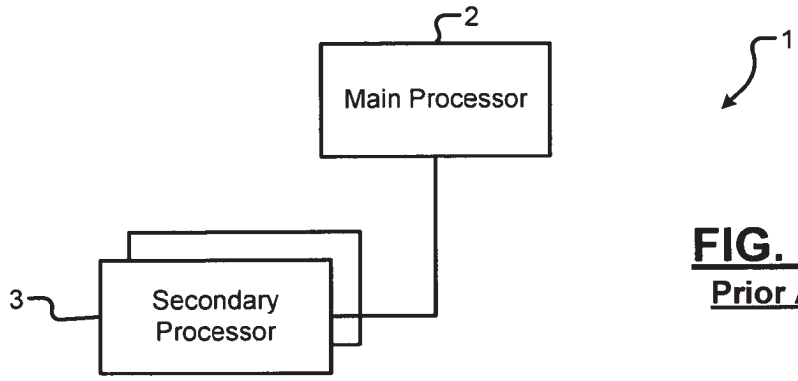

FIG. 1A
Prior Art

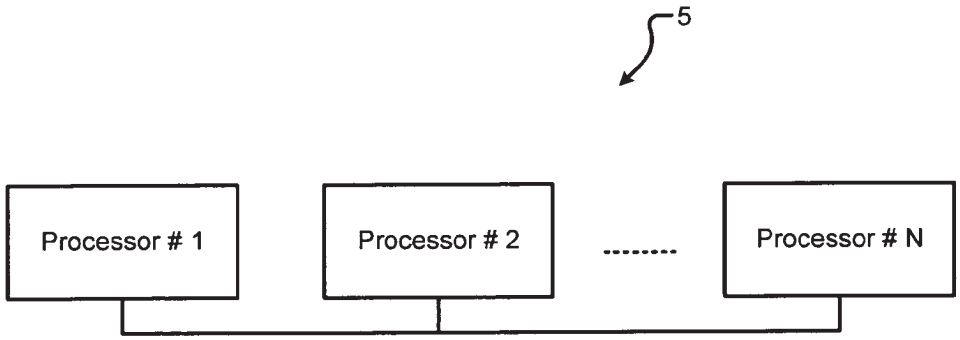

FIG. 1B
Prior Art

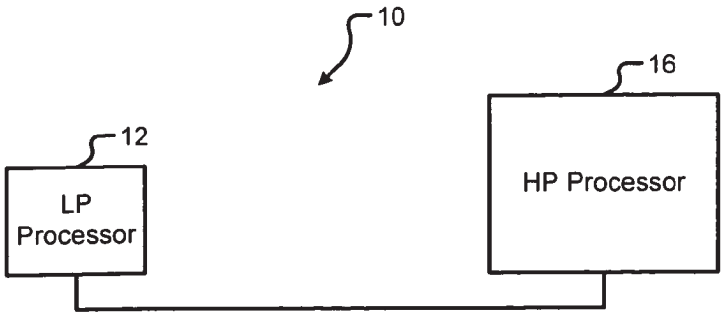

FIG. 2

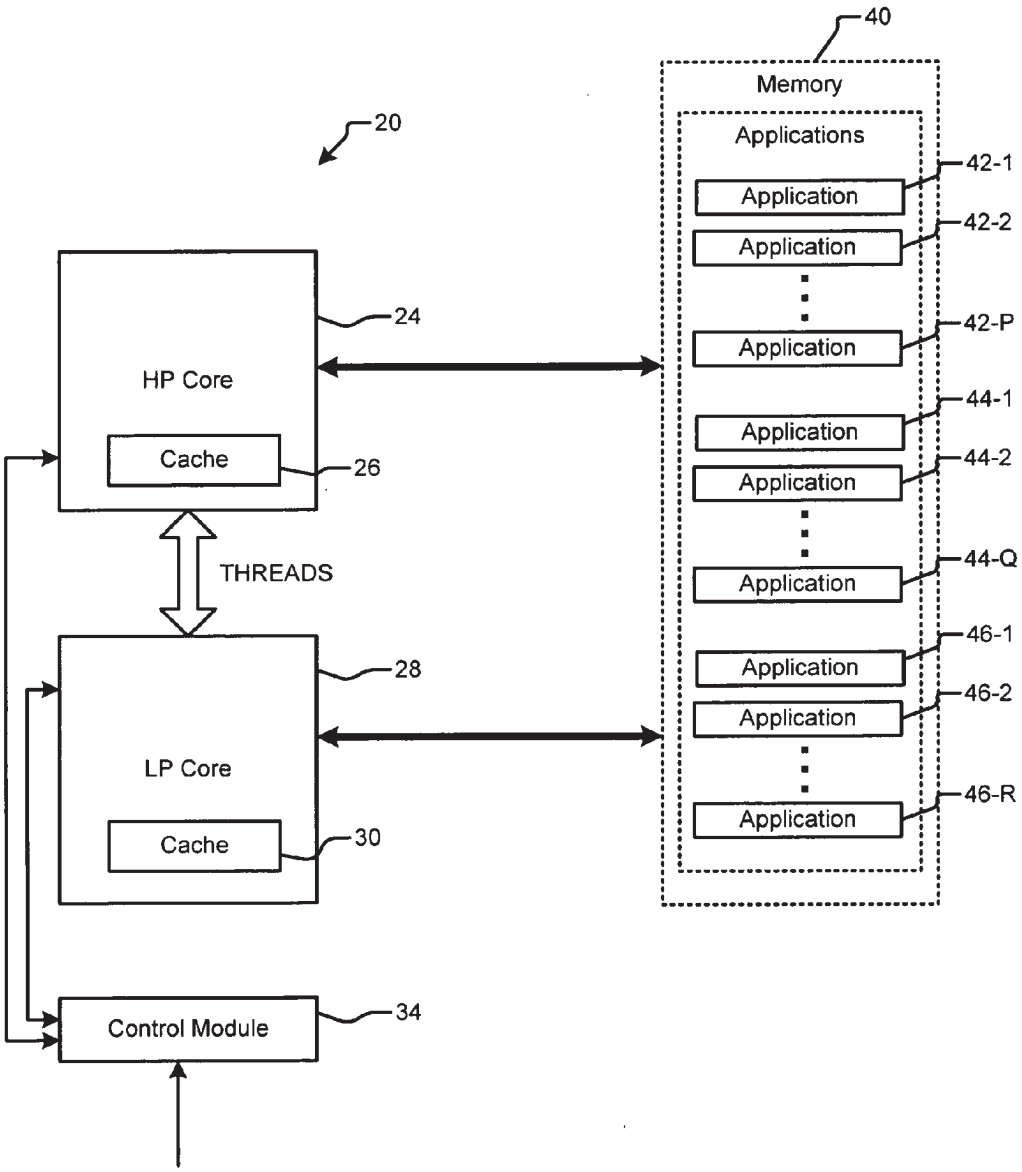
40
Memory
Applications
20
42-1
Application
42-2
Application
24
42-P
Application
HP Core
44-1
Application
Cache
26
44-2
Application
THREADS
44-Q
Application
46-1
Application
28
46-2
Application
LP Core
46-R
Application
Cache
30
Control Module
34

FIG. 3A

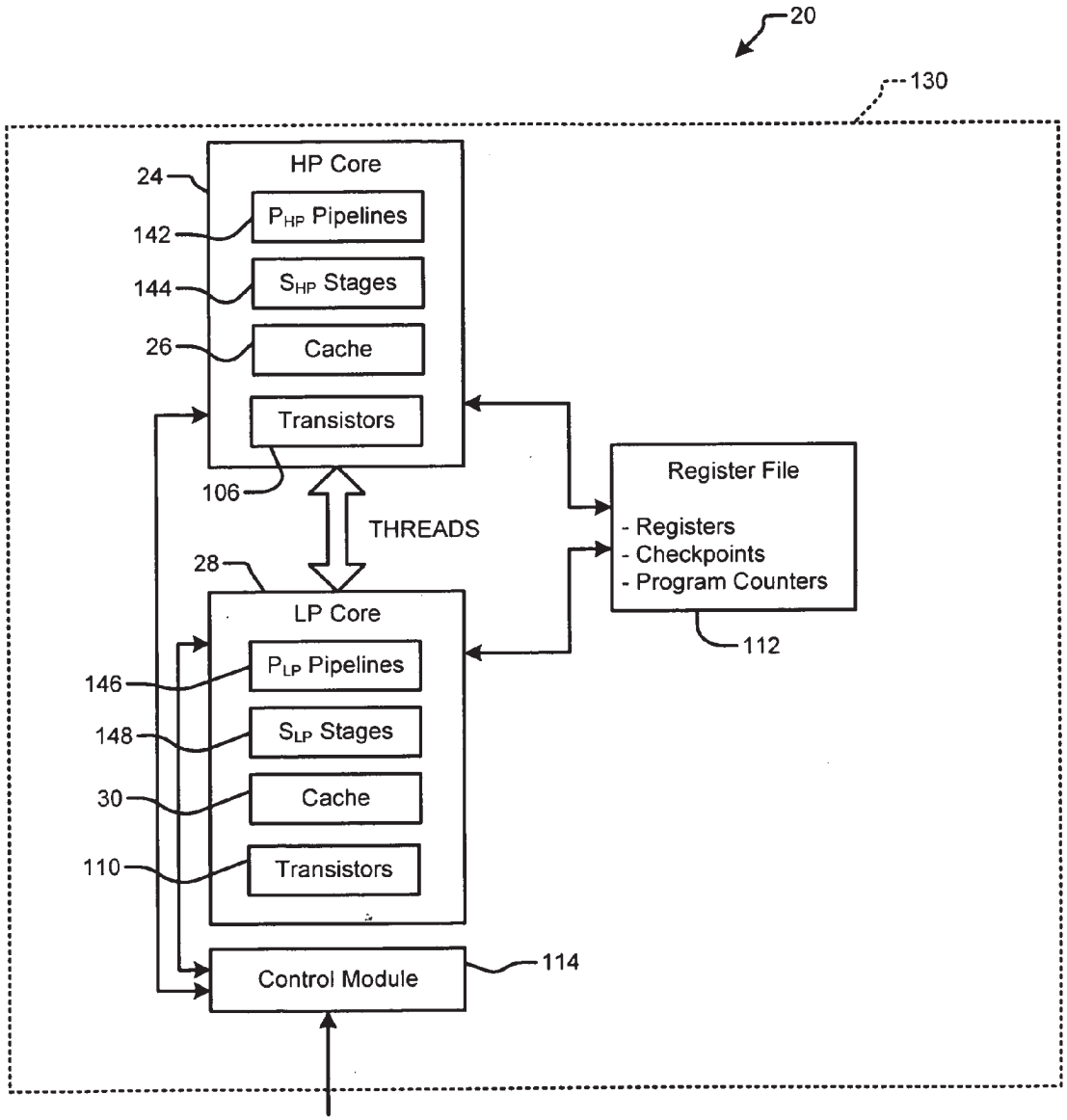
20
130
HP Core
24
P_{HP} Pipelines
142
S_{HP} Stages
144
Cache
26
Transistors
106
THREADS
28
LP Core
P_{LP} Pipelines
146
S_{LP} Stages
148
Cache
30
Transistors
110
Register File
- Registers
- Checkpoints
- Program Counters
112
Control Module
114

FIG. 3B

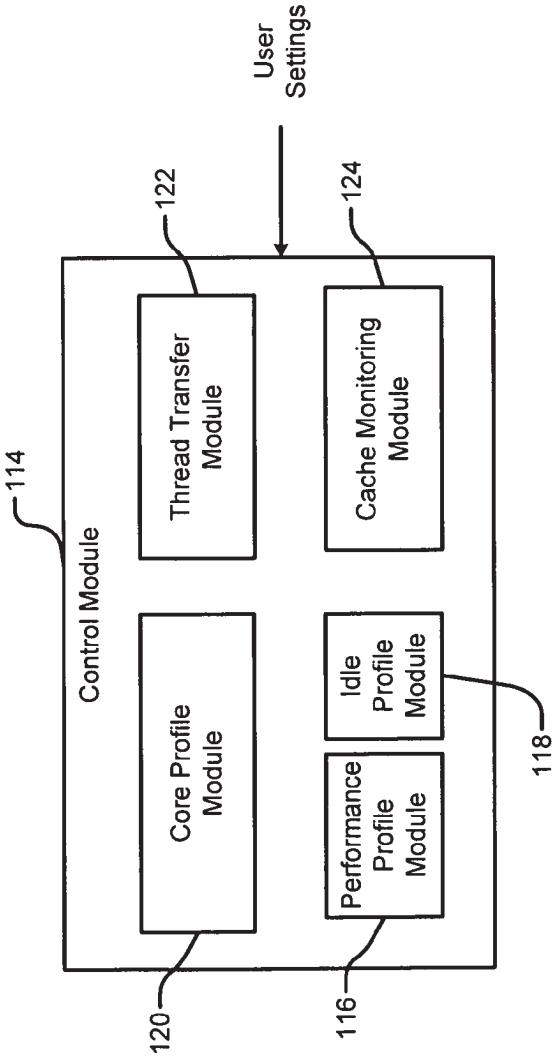
114
Control Module
User Settings
122
124
Thread Transfer Module
Cache Monitoring Module
Core Profile Module
Idle Profile Module
Performance Profile Module
118
120
116

FIG. 3C

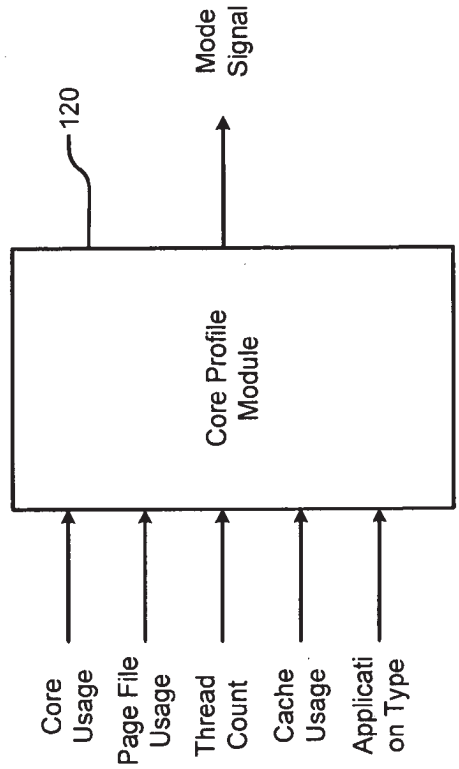
120
Mode Signal
Core Profile Module
Core Usage
Page File Usage
Thread Count
Cache Usage
Applicati on Type

FIG. 3D

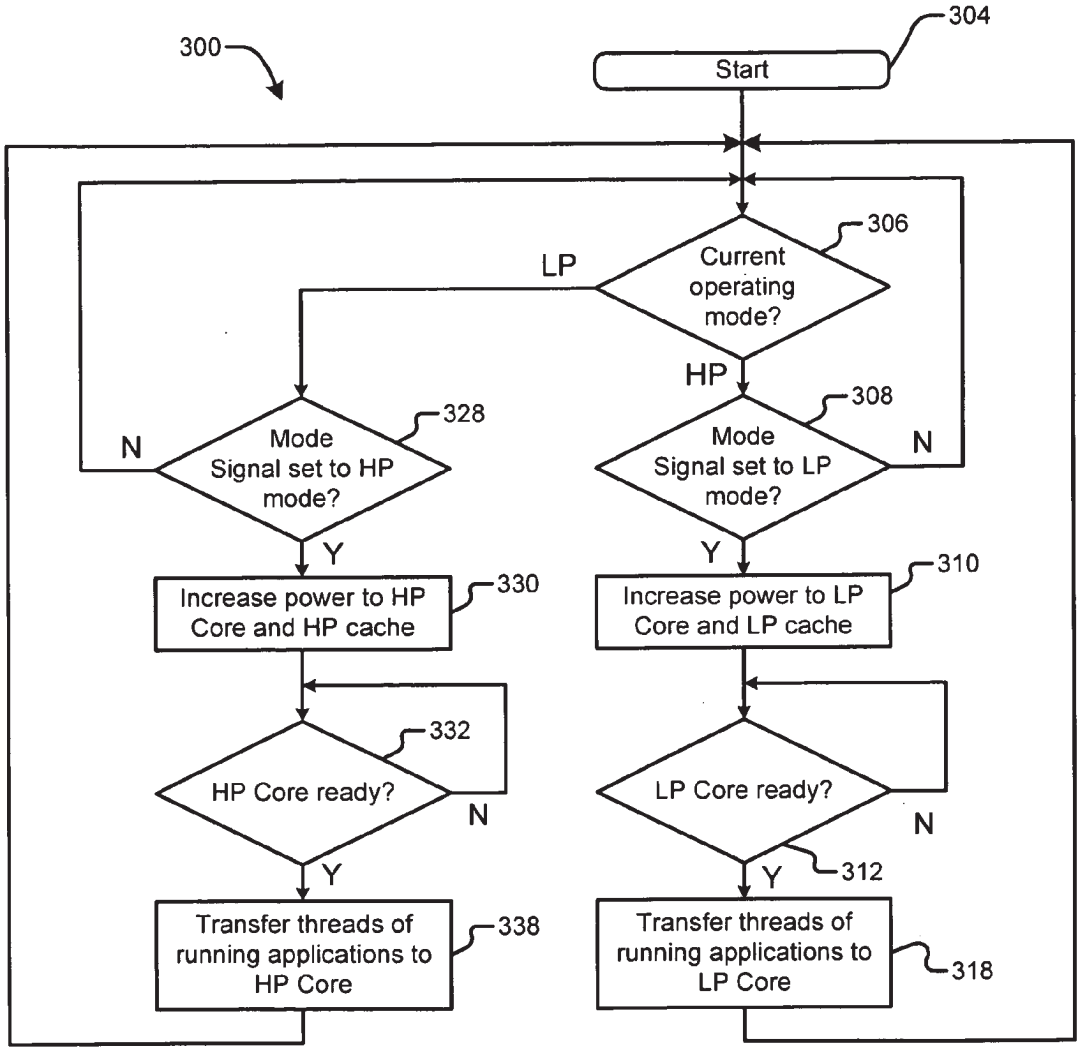
300
304
Start
306
Current operating mode?
LP
HP
328
Mode Signal set to HP mode?
N
Y
308
Mode Signal set to LP mode?
N
Y
330
Increase power to HP Core and HP cache
310
Increase power to LP Core and LP cache
332
HP Core ready?
N
Y
LP Core ready?
N
Y
312
338
Transfer threads of running applications to HP Core
Transfer threads of running applications to LP Core
318

FIG. 4

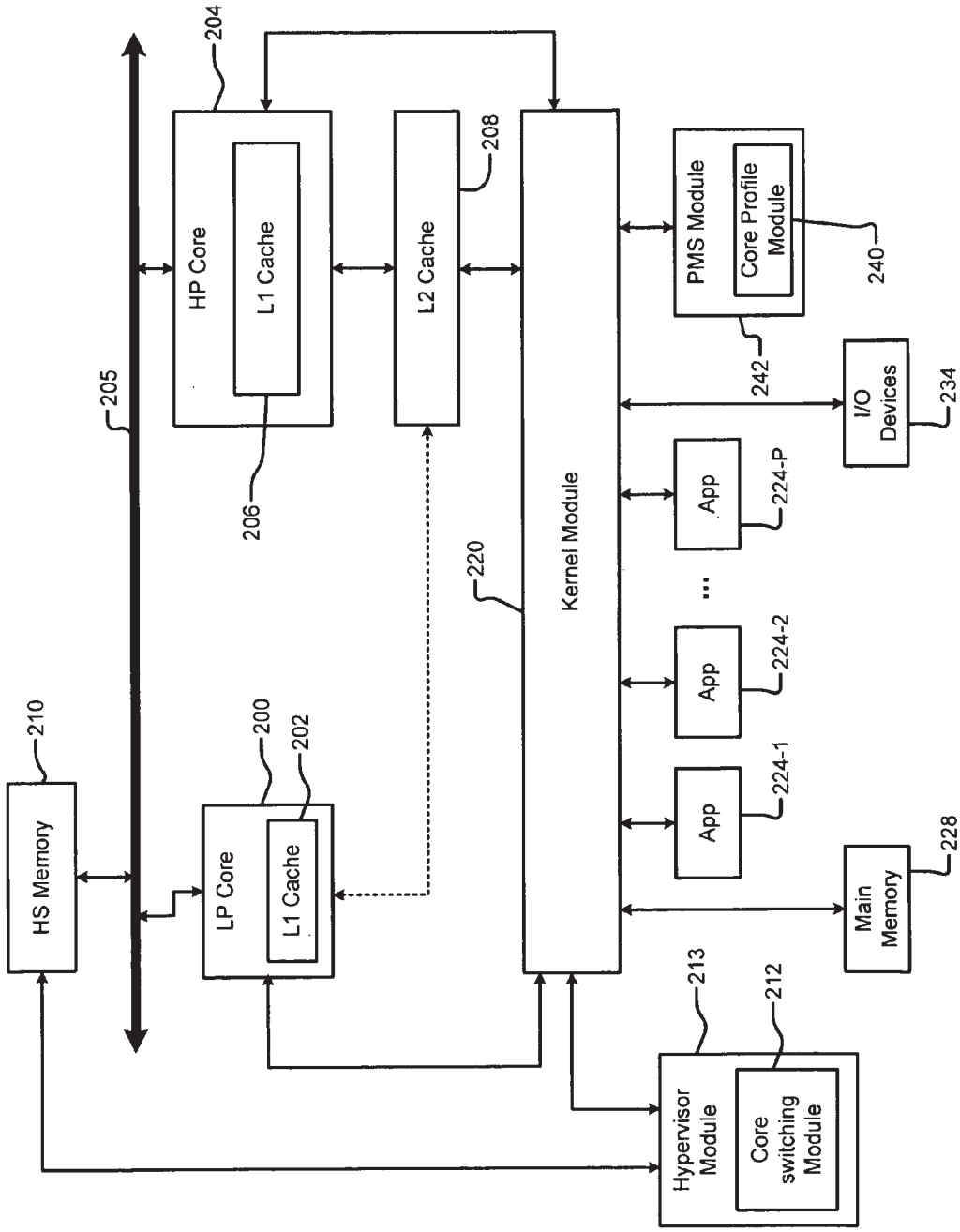
HS Memory
210
205
HP Core
204
L1 Cache
206
L2 Cache
208
LP Core
200
L1 Cache
202
Kernel Module
220
PMS Module
Core Profile Module
240
242
I/O Devices
234
App
224-P
App
224-2
App
224-1
Main Memory
228
Hypervisor Module
213
Core switching Module
212

FIG. 5

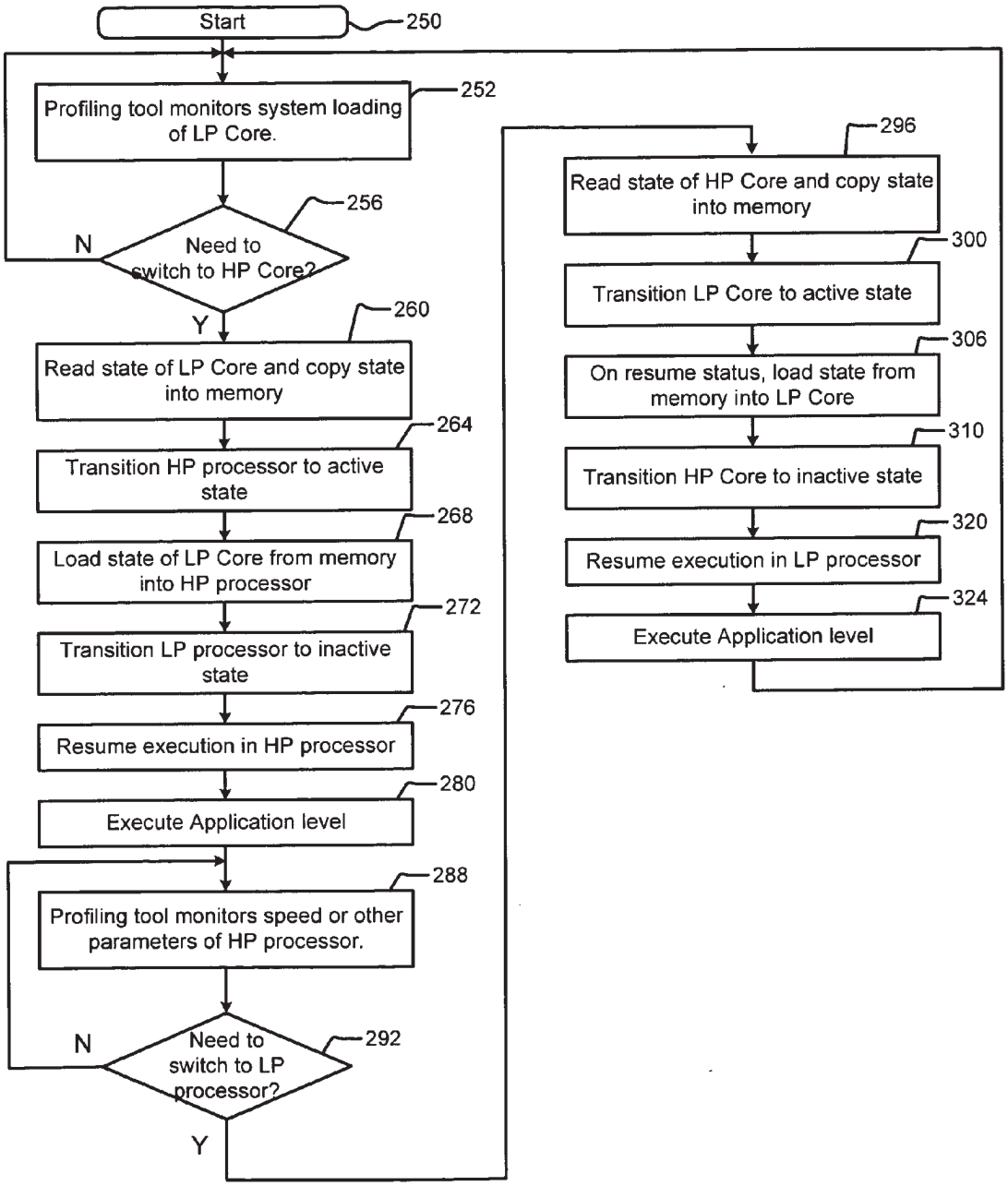
Start
250
Profiling tool monitors system loading of LP Core.
252
Need to switch to HP Core?
256
N
Y
Read state of LP Core and copy state into memory
260
Transition HP processor to active state
264
Load state of LP Core from memory into HP processor
268
Transition LP processor to inactive state
272
Resume execution in HP processor
276
Execute Application level
280
Profiling tool monitors speed or other parameters of HP processor.
288
Need to switch to LP processor?
292
N
Y
Read state of HP Core and copy state into memory
296
Transition LP Core to active state
300
On resume status, load state from memory into LP Core
306
Transition HP Core to inactive state
310
Resume execution in LP processor
320
Execute Application level
324

FIG. 6

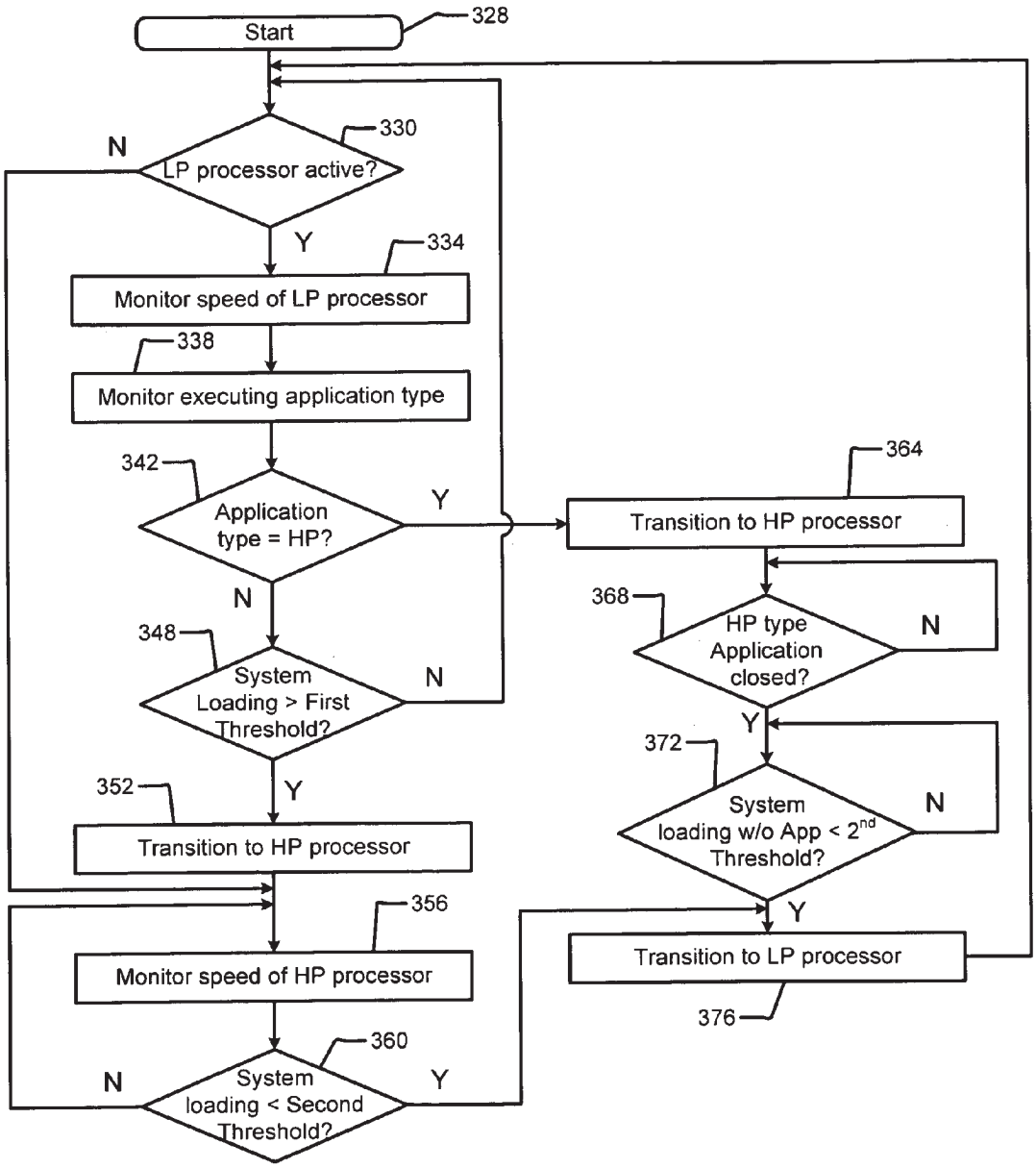
Start
328
330
LP processor active?
N
Y
334
Monitor speed of LP processor
338
Monitor executing application type
342
Application type = HP?
Y
N
348
System Loading > First Threshold?
N
Y
352
Transition to HP processor
356
Monitor speed of HP processor
360
System loading < Second Threshold?
N
Y
364
Transition to HP processor
368
HP type Application closed?
N
Y
372
System loading w/o App < 2nd Threshold?
N
Y
Transition to LP processor
376

FIG. 7

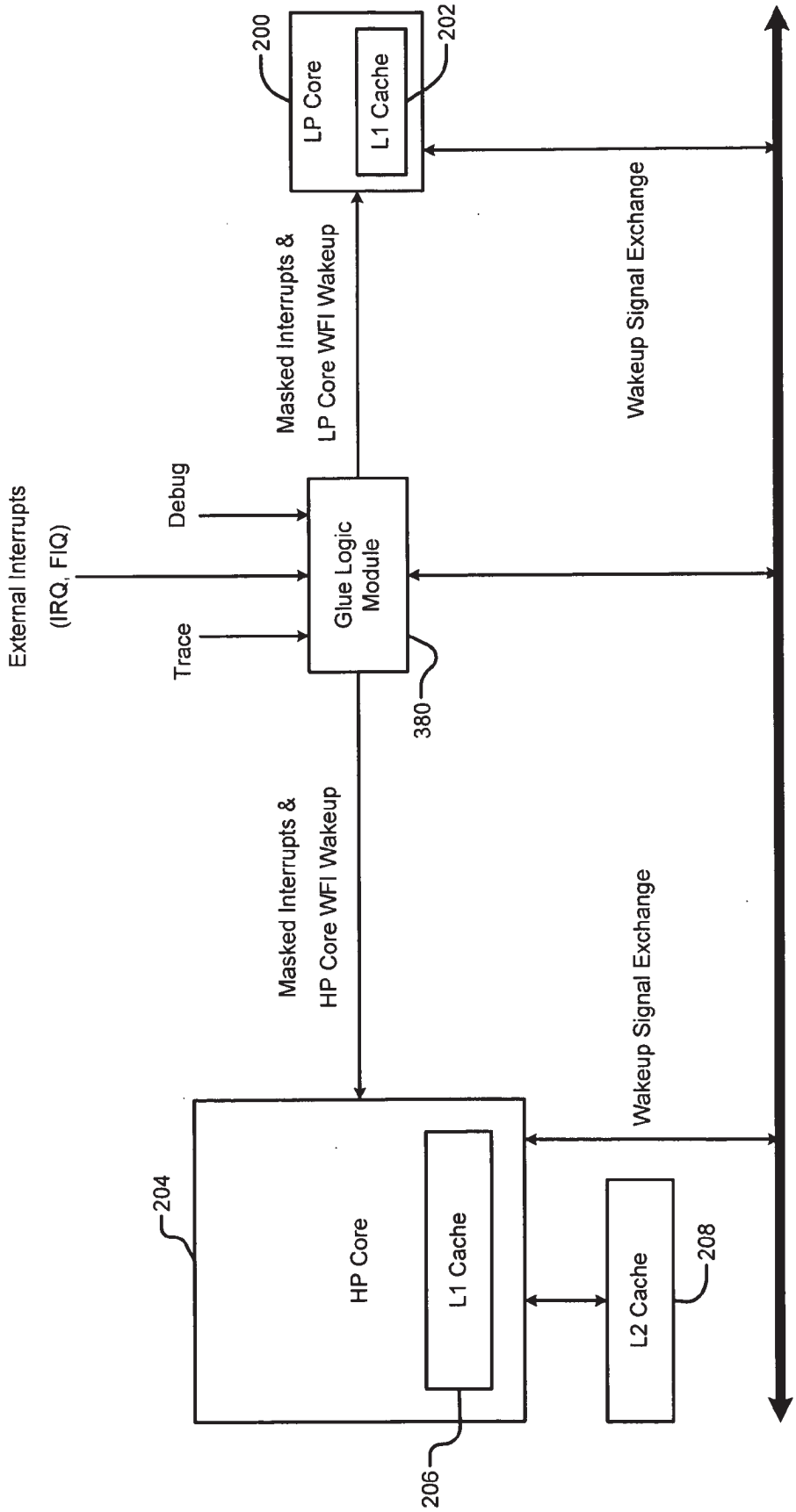
External Interrupts
(IRQ, FIQ)
Debug
Trace
Glue Logic Module
380
Masked Interrupts &
LP Core WFI Wakeup
LP Core
L1 Cache
200
202
Masked Interrupts &
HP Core WFI Wakeup
HP Core
L1 Cache
204
206
L2 Cache
208
Wakeup Signal Exchange
Wakeup Signal Exchange

FIG. 8A

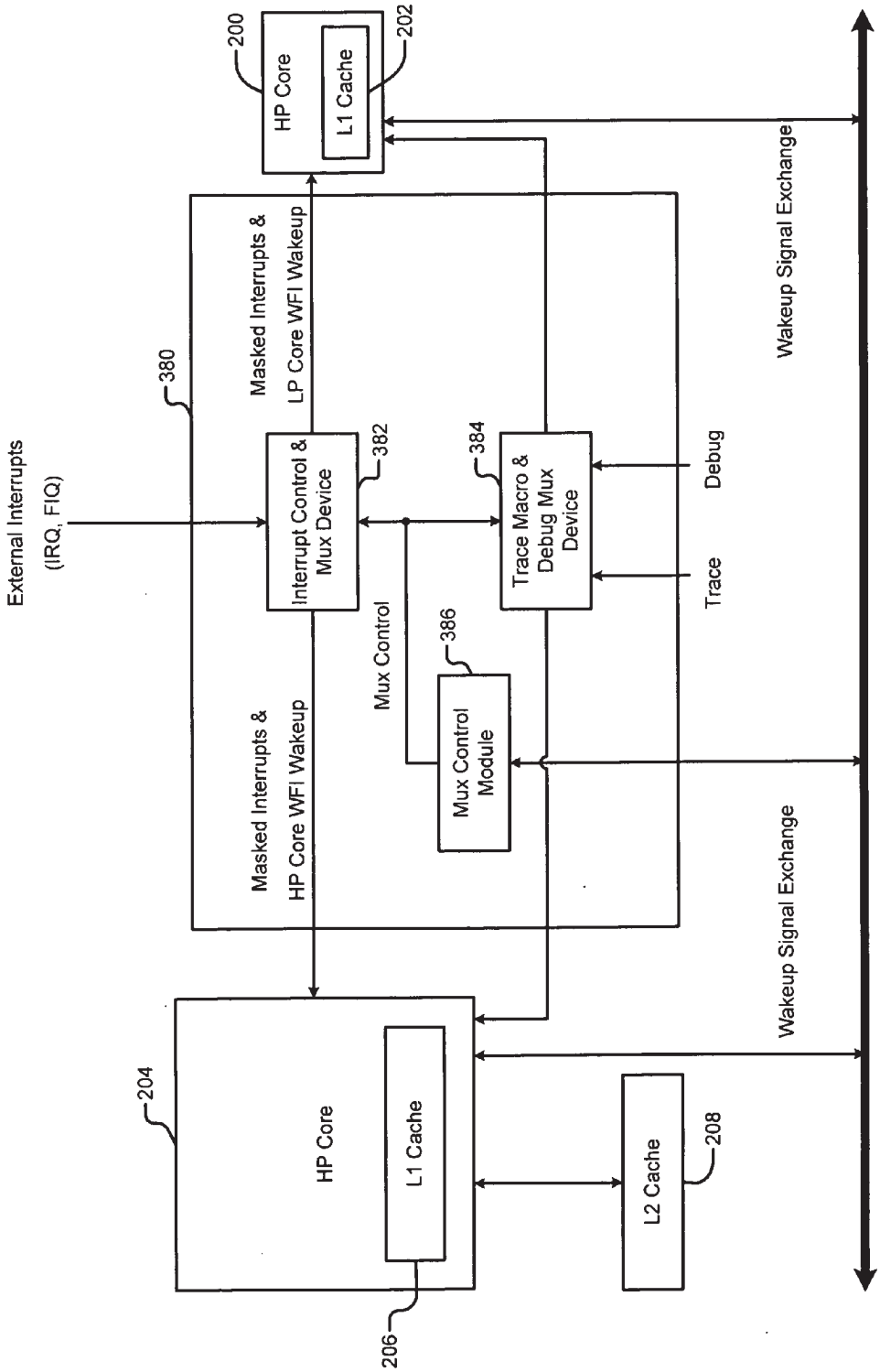
External Interrupts
(IRQ, FIQ)
380
Masked Interrupts &
LP Core WFI Wakeup
Masked Interrupts &
HP Core WFI Wakeup
Interrupt Control &
Mux Device
382
Trace Macro &
Debug Mux
Device
384
Mux Control
Module
386
Mux Control
Debug
Trace
HP Core
200
L1 Cache
202
HP Core
204
L1 Cache
206
L2 Cache
208
Wakeup Signal Exchange
Wakeup Signal Exchange

FIG. 8B

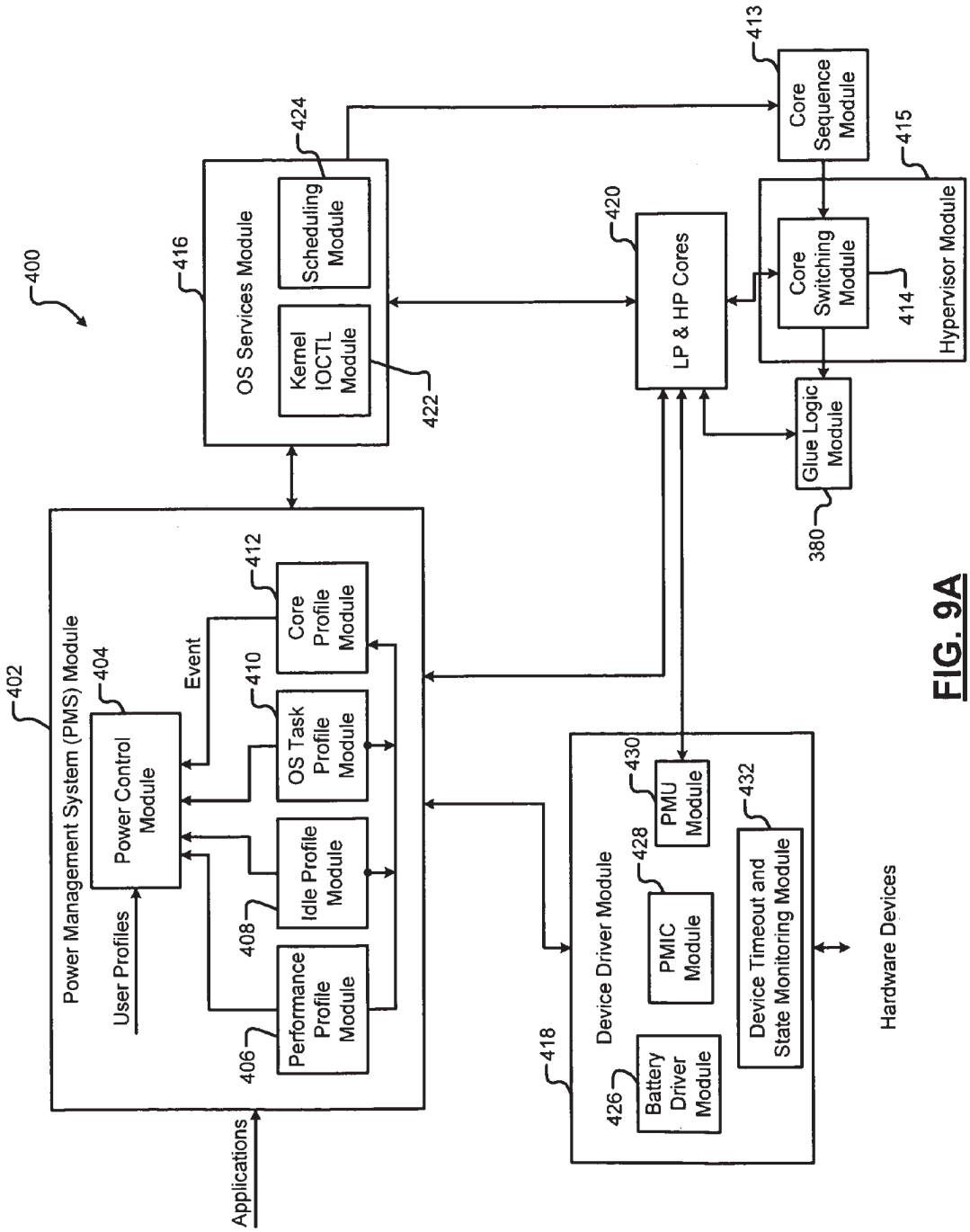
400
402
Power Management System (PMS) Module
404
Power Control Module
User Profiles
Event
406
Performance Profile Module
408
Idle Profile Module
410
OS Task Profile Module
412
Core Profile Module
Applications
416
OS Services Module
422
Kernel IOCTL Module
424
Scheduling Module
420
LP & HP Cores
413
Core Sequence Module
415
Hypervisor Module
414
Core Switching Module
380
Glue Logic Module
418
Device Driver Module
426
Battery Driver Module
428
PMIC Module
430
PMU Module
432
Device Timeout and State Monitoring Module
Hardware Devices

FIG. 9A

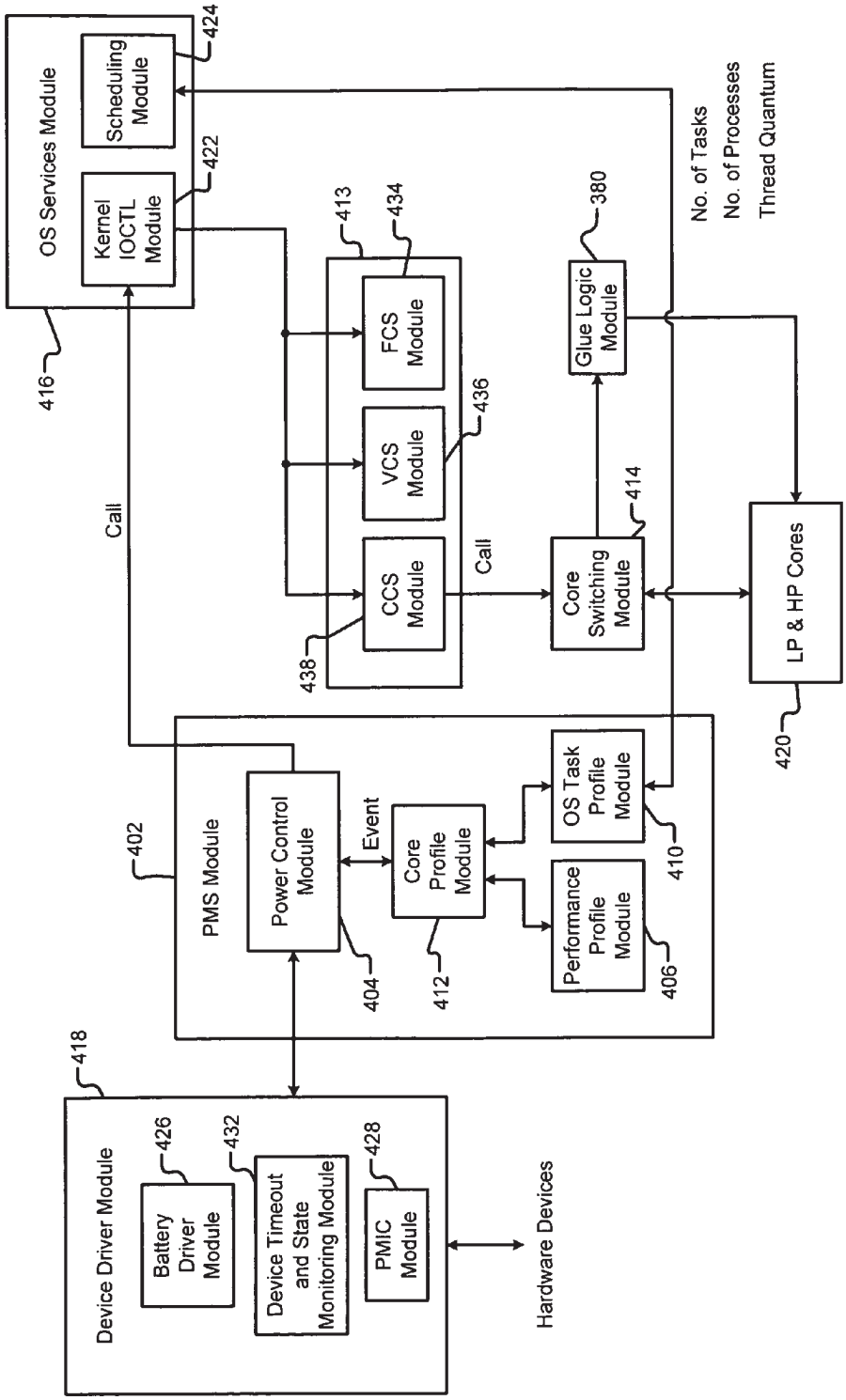
OS Services Module
Kernel IOCTL Module
Scheduling Module
416
422
424
Call
413
434
FCS Module
VCS Module
CCS Module
436
438
Call
380
Glue Logic Module
414
Core Switching Module
No. of Tasks
No. of Processes
Thread Quantum
LP & HP Cores
420
402
PMS Module
Power Control Module
Event
Core Profile Module
OS Task Profile Module
Performance Profile Module
404
412
410
406
418
Device Driver Module
Battery Driver Module
Device Timeout and State Monitoring Module
PMIC Module
426
432
428
Hardware Devices

FIG. 9B

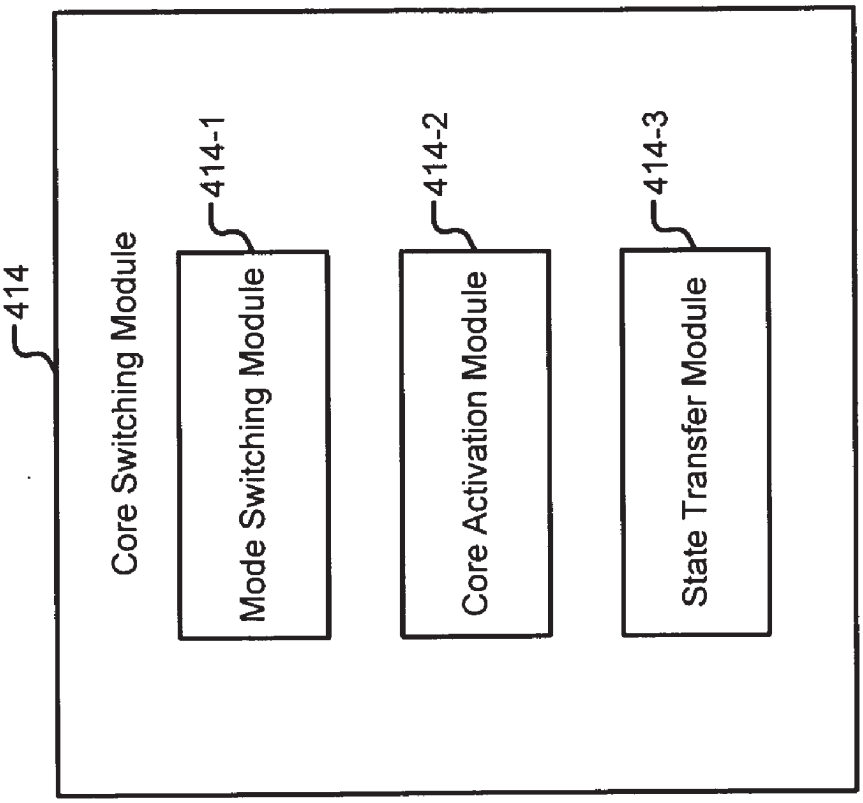
414
Core Switching Module
414-1
Mode Switching Module
414-2
Core Activation Module
414-3
State Transfer Module

FIG. 9C

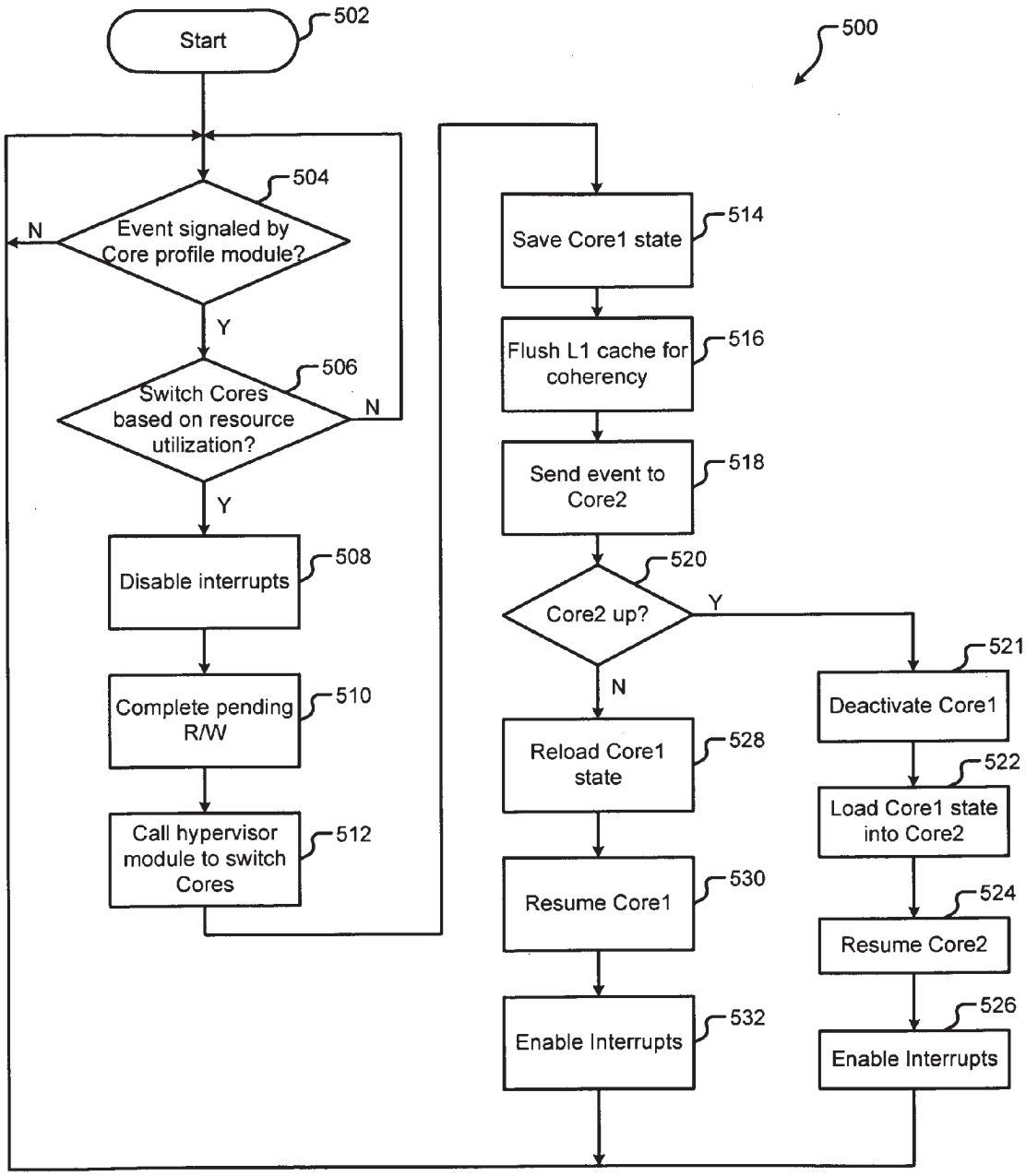
Start
502
500
504
Event signaled by Core profile module?
N
Y
506
Switch Cores based on resource utilization?
N
Y
508
Disable interrupts
510
Complete pending R/W
512
Call hypervisor module to switch Cores
514
Save Core1 state
516
Flush L1 cache for coherency
518
Send event to Core2
520
Core2 up?
Y
N
521
Deactivate Core1
522
Load Core1 state into Core2
524
Resume Core2
526
Enable Interrupts
528
Reload Core1 state
530
Resume Core1
532
Enable Interrupts

FIG. 10

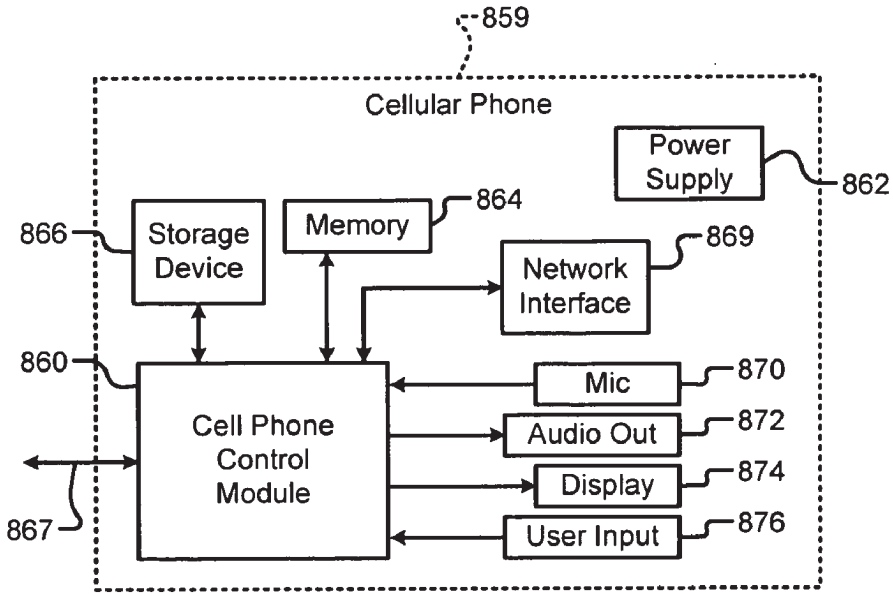

FIG. 11A

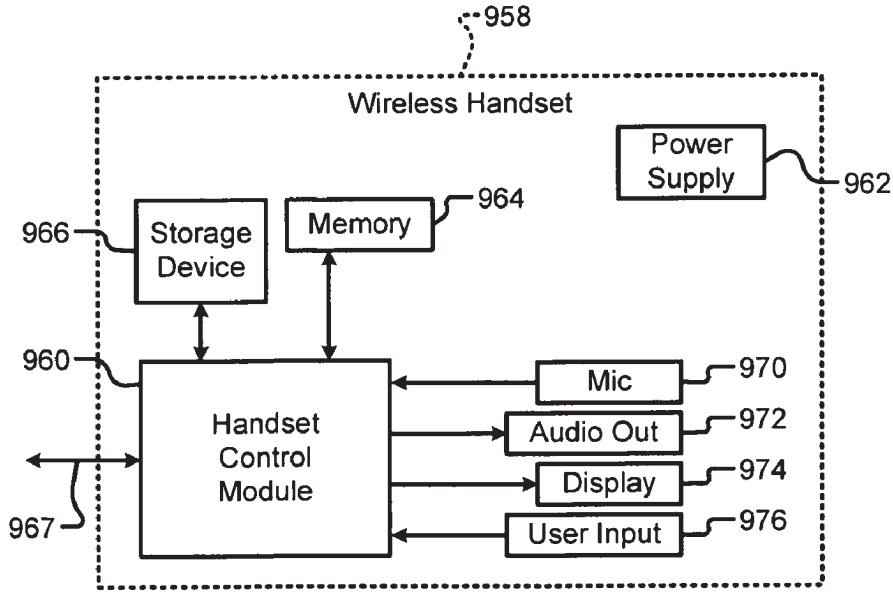

FIG. 11B

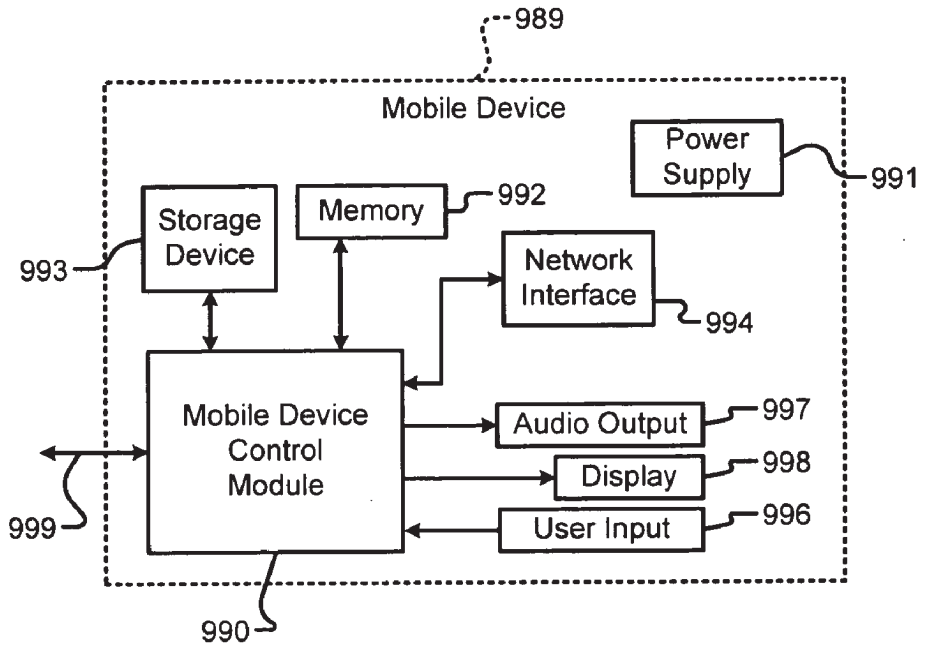

FIG. 11C

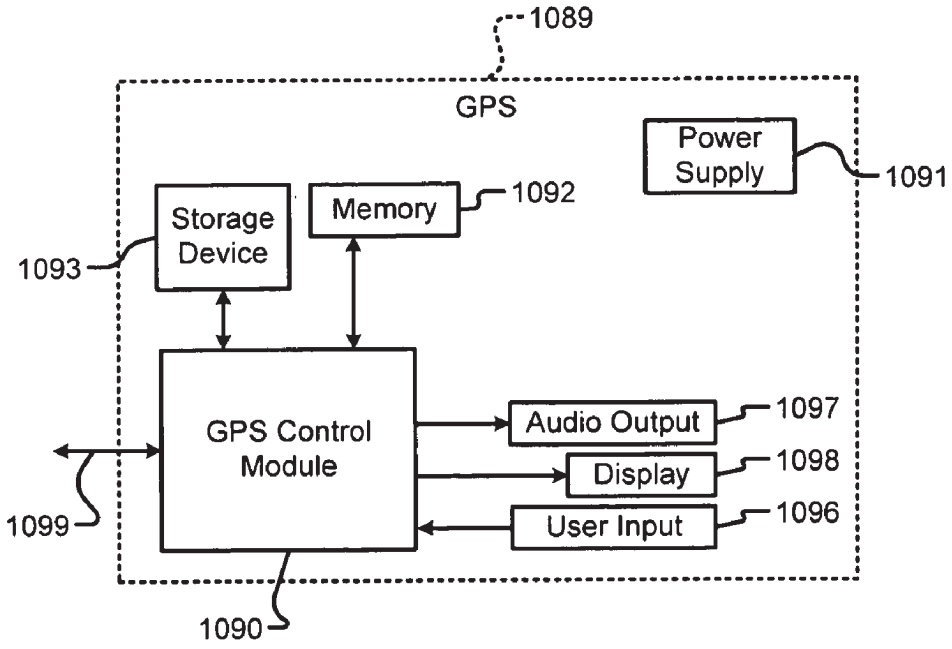

FIG. 11D

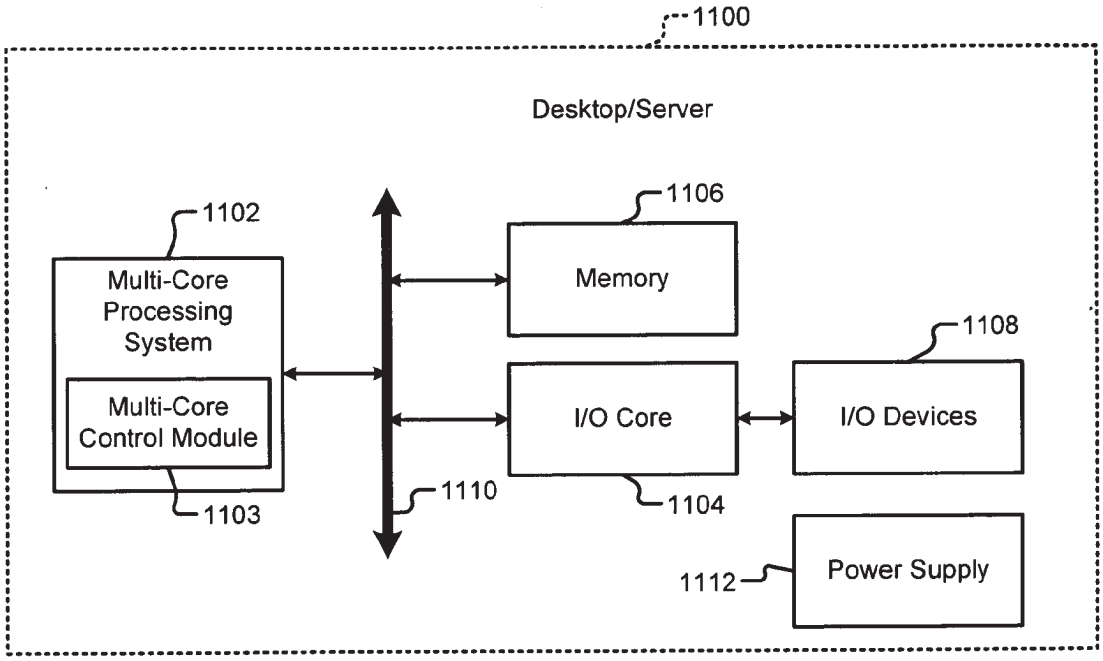
1100
Desktop/Server
1102
Multi-Core Processing System
Multi-Core Control Module
1103
1106
Memory
1108
I/O Core
I/O Devices
1110
1104
1112
Power Supply

FIG. 11E

DYNAMIC CORE SWITCHING

CROSS-REFERENCE TO RELATED APPLICATIONS

[0001] This application is a continuation of U.S. application Ser. No. 12/145,660, filed Jun. 25, 2008, which claims the benefit of U.S. Provisional Application No. 60/968,143, filed Aug. 27, 2007; U.S. Provisional Application No. 60/978,936, filed Oct. 10, 2007; U.S. Provisional Application No. 60/981,606, filed Oct. 22, 2007; U.S. Provisional Application No. 61/022,431 filed Jan. 21, 2008; U.S. Provisional Application No. 61/029,476, filed Feb. 18, 2008; U.S. Provisional Application No. 61/049,641, filed May 1, 2008; and U.S. Provisional Application No. 61/058,050, filed Jun. 2, 2008 and is a continuation-in-part of U.S. application Ser. No. 11/523,996, filed Sep. 20, 2006, which claims the benefit of U.S. Provisional Application No. 60/825,368, filed Sep. 12, 2006; U.S. Provisional Application No. 60/823,453, filed Aug. 24, 2006; and U.S. Provisional Application No. 60/822,015, filed Aug. 10, 2006. The disclosures of the above applications are incorporated herein by reference in their entirety.

FIELD

[0002] The present disclosure relates to mobile computing devices, and more particularly to dynamically switching cores of multi-core processing systems of mobile computing devices.

BACKGROUND

[0003] The background description provided herein is for the purpose of generally presenting the context of the disclosure. Work of the presently named inventors, to the extent it is described in this background section, as well as aspects of the description that may not otherwise qualify as prior art at the time of filing, are neither expressly nor impliedly admitted as prior art against the present disclosure.

[0004] Mobile computing devices such as cellular phones, MP3 players, global positioning system (GPS) devices, etc. are typically powered using both line power and battery power. The mobile computing devices typically include a processor, memory and a display, which consume power during operation. The processor generally executes both simple applications that are less processing-intensive and complex applications that are more processing-intensive. Therefore, the capabilities of the processor such as processing speed are typically selected to match the performance requirements of the most processing-intensive applications that will be executed.

[0005] One significant limitation of mobile computing devices relates to the amount of time for which the devices can be operated using batteries without recharging. Using a high-speed processor that meets the performance requirements of the processing-intensive applications generally increases power consumption, which corresponds to a relatively short battery life.

[0006] Referring now to FIGS. **1**A and **1**B, some desktop and laptop computers use multiple processor integrated circuits (ICs) or a single processor IC with multiple cores. These systems can be of different types. As used herein, the term processor is used to refer to an IC with one or more processing cores. A multi-core processor refers to an IC, a system-on-chip (SOC), or a system-in-package (SIP) with two or more processing cores.

[0007] In FIG. **1**A, an asymmetric multi-processor (MP) system **1** comprising a main processor **2** and one or more secondary processors **3** is shown. The asymmetric MP system **1** may also be implemented as a single IC or SOC with a main core and a secondary core. The main processor **2** has a different instruction set architecture (ISA) than the secondary processors **3**. An operating system (OS) may run on the main processor **2**. Applications may run on the secondary processors **3**. The secondary processors **3** do not run threads of the OS and may be invisible to an OS scheduler. An OS driver interface to a real-time OS (RTOS) may run on the secondary processors **3**. Key functions may be offloaded to the secondary processors **3** for power saving and reducing the duty cycle of the main processor **2**. For example only, the asymmetric MP system **1** can be used for special-purpose processing (e.g., video, 3D graphics, etc.). Since the secondary processors **3** may run in addition to the main processor **2** when applications are executed, the asymmetric MP system **1** may consume large amounts of power.

[0008] In FIG. **1**B, a symmetric MP system **5** may comprise N identical processors, where N is an integer greater than 1. The symmetric MP system **5** may also be implemented as a single IC or SOC with N identical cores. N may be proportional to the processing load of the symmetric MP system **5**. The N processors use the same ISA. The N processors may be visible to the OS scheduler. The N processors may have transparent access to system resources including memory and input/output (I/O). Depending on the processing load, one or more of the N processors can be utilized to execute applications. The high cost and high power consumption of the symmetric MP system **5** tends to make this architecture unsuitable for lower cost mobile devices.

SUMMARY

[0009] A system comprises a first asymmetric core, a second asymmetric core, and a core switching module. The first asymmetric core executes an application when the system operates in a first mode and is inactive when the system operates in a second mode. The second asymmetric core executes the application when the system operates in the second mode. The core switching module switches operation of the system between the first mode and the second mode. The core switching module selectively stops processing of the application by the first asymmetric core after receiving a first control signal. The core switching module transfers a first state of the first asymmetric core to the second asymmetric core. The second asymmetric core resumes executing the application in the second mode.

[0010] In another feature, the first control signal indicates that interrupts are disabled.

[0011] In another feature, the second asymmetric core executes instructions without instruction translation when the second asymmetric core resumes executing the application during the second mode.

[0012] In other features, the system further comprises an operating system (OS) that provides services to the application. The core switching module switches execution of the application between the first asymmetric core and the second asymmetric core transparently to the OS.

[0013] In other features, a first maximum speed of the first asymmetric core is greater than a second maximum speed of the second asymmetric core. The first asymmetric core operates at frequencies greater than a predetermined frequency. The second asymmetric core operates at frequencies less than

the predetermined frequency. A first maximum operating power level of the first asymmetric core is greater than a second maximum operating power level of the second asymmetric core.

[0014] In other features, the first asymmetric core uses a first instruction set architecture (ISA). The second asymmetric core uses a second ISA. The first ISA is compatible with the second ISA. A first set of instructions of the first ISA is a superset of a second set of instructions of the second ISA. The first set includes more instructions than the second set.

[0015] In other features, the OS comprises a kernel. The core switching module executes above a level of the kernel.

[0016] In other features, the system further comprises a hypervisor module. The core switching module is integrated with the hypervisor module.

[0017] In other features, the core switching module saves the first state when the core switching module selectively stops processing of the application by the first asymmetric core. The core switching module powers up the second asymmetric core and initializes the second asymmetric core using the first state. The interrupts are enabled after the second asymmetric core resumes executing the application. The core switching module shuts down the first asymmetric core when the second asymmetric core powers up. One of no power and standby power is supplied to the first asymmetric core after the first asymmetric core is shut down.

[0018] In other features, the system further comprises a level-2 (L2) cache that communicates with the first asymmetric core. One of no power and standby power is supplied to the L2 cache after the first asymmetric core is shut down.

[0019] In other features, the core switching module initializes the first asymmetric core using the first state when the second asymmetric core fails to power up. The first asymmetric core resumes executing the application in the first mode and interrupts are enabled.

[0020] In other features, the core switching module switches operation of the system between the second mode and the first mode. The core switching module selectively stops processing of the application by the second asymmetric core after receiving the first control signal. The core switching module transfers a second state of the second asymmetric core to the first asymmetric core. The first asymmetric core resumes executing the application in the first mode. The first control signal indicates that interrupts are disabled.

[0021] In another feature, instructions are executed without instruction translation when the first asymmetric core resumes executing the application during the first mode.

[0022] In other features, the system further comprises an operating system (OS) that provides services to the application. The core switching module switches execution of the application between the second asymmetric core and the first asymmetric core transparently to the OS.

[0023] In other features, the core switching module saves the second state when the core switching module selectively stops processing of the application by the second asymmetric core. The core switching module powers up the first asymmetric core and initializes the first asymmetric core using the second state. The interrupts are enabled after the first asymmetric core resumes executing the application.

[0024] In other features, the system further comprises a level-2 (L2) cache that communicates with the first asymmetric core. Power is supplied to the L2 cache after the first asymmetric core powers up.

[0025] In other features, the core switching module shuts down the second asymmetric core when the first asymmetric core powers up. One of no power and standby power is supplied to the second asymmetric core after the second asymmetric core is shut down.

[0026] In other features, the core switching module initializes the second asymmetric core using the second state when the first asymmetric core fails to power up. The second asymmetric core resumes executing the application in the second mode, and the interrupts are enabled.

[0027] In another feature, the system further comprises a core profile module that generates a second control signal based on at least one of core utilization, resource utilization, and performance of the application.

[0028] In other features, the system further comprises a core change sequence (CCS) module that initiates a CCS based on the second control signal. The core switching module switches execution of the application between one of the first and second asymmetric cores and another of the first and second asymmetric cores based on the CCS.

[0029] In other features, the CCS module initiates the CCS when the core utilization of the second asymmetric core by the application is greater than or equal to a first predetermined threshold. The CCS module initiates the CCS when the core utilization of the second asymmetric core by the application is greater than or equal to a second predetermined threshold for a first predetermined time period. The CCS module initiates the CCS when an anticipated core utilization of the second asymmetric core is greater than or equal to a third predetermined threshold. The anticipated core utilization is determined based on at least one of a type of the application and a history of execution of the application. The CCS module initiates the CCS when the core utilization of the first asymmetric core by the application is less than or equal to a fourth predetermined threshold. The CCS module initiates the CCS when the core utilization of the first asymmetric core by the application is less than or equal to a fifth predetermined threshold for a second predetermined time period.

[0030] In another feature, the CCS module initiates the CCS based on at least one of a type of the application, a number of applications, and a type of instruction executed by one of the first and second asymmetric cores.

[0031] In another feature, the core profile module generates the second control signal based on a number of times execution of applications is switched between one of the first and second asymmetric cores and another of the first and second asymmetric cores.

[0032] In other features, the system further comprises a power control module that controls power consumption of the system and that generates a third control signal based on the second control signal and the power consumption. The system further comprises a core change sequence (CCS) module that initiates a CCS based on the third control signal. The core switching module switches execution of the application between one of the first and second asymmetric cores and another of the first and second asymmetric cores based on the CCS.

[0033] In another feature, the system further comprises a frequency change sequence (FCS) module that initiates a FCS based on the second control signal and that selects an operating frequency of at least one of the first and second asymmetric cores based on the FCS.

[0034] In another feature, the system further comprises a voltage change sequence (VCS) module that initiates a VCS

based on the second control signal and that selects a supply voltage of at least one of the first and second asymmetric cores based on the VCS.

[0035] In another feature, the system further comprises a power management module that disables the interrupts when the system switches operation between the first mode and the second mode and that disables the interrupts when the system switches operation between the second mode and the first mode.

[0036] In other features, the system further comprises a plurality of the first asymmetric core. The core switching module selectively activates and deactivates more than one of the plurality of the first asymmetric core based on the CCS when the system operates in the first mode.

[0037] In another feature, the system further comprises a glue logic module that selectively communicates with the core switching module, that receives interrupts, that receives first signals from the application, and that routes the interrupts and the first signals to the one of the first and second asymmetric cores activated by the core switching module.

[0038] In another feature, a system-on-chip (SOC) comprises the system.

[0039] In another feature, a system-in-package (SIP) comprises the system.

[0040] In still other features, a method comprises executing an application using a first asymmetric core when operating in a first mode. The first asymmetric core is inactive when operating in a second mode. The method further comprises switching operation between the first mode and the second mode using a core switching module. The method further comprises selectively stopping processing of the application by the first asymmetric core using the core switching module after receiving a first control signal. The method further comprises transferring a first state of the first asymmetric core to the second asymmetric core using the core switching module and resuming execution of the application in the second mode using the second asymmetric core.

[0041] In another feature, the method further comprises disabling interrupts and indicating via the first control signal that the interrupts are disabled.

[0042] In another feature, the method further comprises executing instructions without instruction translation when the second asymmetric core resumes executing the application during the second mode.

[0043] In another feature, the method further comprises providing services to the application via an operating system (OS) and switching execution of the application between the first asymmetric core and the second asymmetric core transparently to the OS using the core switching module.

[0044] In other features, the method further comprises selectively operating the first asymmetric core at a first maximum speed and selectively operating the second asymmetric core at a second maximum speed. The first maximum speed is greater than the second maximum speed. The method further comprises selectively operating the first asymmetric core at a first maximum operating power level and selectively operating the second asymmetric core at a second maximum operating power level. The first maximum operating power level is greater than the second maximum operating power level. The method further comprises selectively operating the first asymmetric core at frequencies greater than a predetermined frequency and selectively operating the second asymmetric core at frequencies less than the predetermined frequency.

[0045] In other features, the method further comprises operating the first asymmetric core using a first instruction set architecture (ISA) and operating the second asymmetric core using a second ISA. The first ISA is compatible with the second ISA. The method further comprises operating the first asymmetric core using a first set of instructions of the first ISA and operating the second asymmetric core using a second set of instructions of the second ISA. The first set is a superset of the second set. The first set includes more instructions than the second set.

[0046] In another feature, the method further comprises providing a kernel of the OS and executing the core switching module above a level of the kernel.

[0047] In another feature, the method further comprises providing a hypervisor module and integrating the core switching module with a hypervisor module.

[0048] In other features, the method further comprises saving the first state when the core switching module selective stops processing of the application by the first asymmetric core. The method further comprises powering up the second asymmetric core and initializing the second asymmetric core using the first state. The method further comprises enabling the interrupts after the second asymmetric core resumes executing the application. The method further comprises shutting down the first asymmetric core when the second asymmetric core powers up and supplying one of no power and standby power to the first asymmetric core after the first asymmetric core is shut down.

[0049] In other features, the method further comprises providing a level-2 (L2) cache. The first asymmetric core communicates with the L2 cache when the first asymmetric core is active. The method further comprises supplying one of no power and standby power to the L2 cache after the first asymmetric core is shut down.

[0050] In another feature, the method further comprises initializing the first asymmetric core using the first state when the second asymmetric core fails to power up, resuming execution of the application in the first mode using the first asymmetric core, and enabling interrupts.

[0051] In another feature, the method further comprises switching operation between the second mode and the first mode using a core switching module, selectively stopping processing of the application by the second asymmetric core using the core switching module after receiving the first control signal indicating that interrupts are disabled, transferring a second state of the second asymmetric core to the first asymmetric core using the core switching module, and resuming execution of the application in the first mode using the first asymmetric core.

[0052] In another feature, the method further comprises executing instructions without instruction translation when the first asymmetric core resumes executing the application during the first mode.

[0053] In another feature, the method further comprises providing services to the application via an operating system (OS) and switching execution of the application between the second asymmetric core and the first asymmetric core transparently to the OS using the core switching module.

[0054] In other features, the method further comprises saving the second state when the core switching module selectively stops processing of the application by the second asymmetric core. The method further comprises powering up the first asymmetric core and initializing the first asymmetric

core using the second state. The method further comprises enabling the interrupts after the first asymmetric core resumes executing the application.

[0055] In other features, the method further comprises providing a level-2 (L2) cache. The first asymmetric core communicates with the L2 cache when the first asymmetric core is active. The method further comprises supplying power to the L2 cache after the first asymmetric core powers up.

[0056] In other features, the method further comprises shutting down the second asymmetric core when the first asymmetric core powers up and supplying one of no power and standby power to the second asymmetric core after the second asymmetric core is shut down.

[0057] In another feature, the method further comprises initializing the second asymmetric core using the second state when the first asymmetric core fails to power up, resuming execution of the application in the second mode using the second asymmetric core, and enabling the interrupts.

[0058] In another feature, the method further comprises generating a second control signal based on at least one of core utilization, resource utilization, and performance of the application.

[0059] In another feature, the method further comprises initiating a core change sequence (CCS) based on the second control signal and switching execution of the application between one of the first and second asymmetric cores and another of the first and second asymmetric cores based on the CCS using the core switching module.

[0060] In other features, the method further comprises initiating the CCS when the core utilization of the second asymmetric core by the application is greater than or equal to a first predetermined threshold. The method further comprises initiating the CCS when the core utilization of the second asymmetric core by the application is greater than or equal to a second predetermined threshold for a first predetermined time period. The method further comprises initiating the CCS when the core utilization of the first asymmetric core by the application is less than or equal to a third predetermined threshold. The method further comprises initiating the CCS when the core utilization of the first asymmetric core by the application is less than or equal to a fourth predetermined threshold for a first predetermined time period.

[0061] In another feature, the method further comprises determining an anticipated core utilization based on at least one of a type of the application and a history of execution of the application and initiating the CCS when the anticipated core utilization of the second asymmetric core is greater than or equal to a predetermined threshold.

[0062] In another feature, the method further comprises initiating the CCS based on at least one of a number of applications executed by one of the first and second asymmetric cores, a type of the application executed by one of the first and second asymmetric cores, and a type of instruction executed by one of the first and second asymmetric cores.

[0063] In another feature, the method further comprises generating the second control signal based on a number of times execution of applications is switched between one of the first and second asymmetric cores and another of the first and second asymmetric cores.

[0064] In another feature, the method further comprises controlling power consumption, generating a third control signal based on the second control signal and the power consumption, initiating a core change sequence (CCS) based on the third control signal, and switching execution of the application between one of the first and second asymmetric cores and another of the first and second asymmetric cores based on the CCS using the core switching module.

[0065] In another feature, the method further comprises initiating a frequency change sequence (FCS) based on the second control signal and selecting an operating frequency of at least one of the first and second asymmetric cores based on the FCS.

[0066] In another feature, the method further comprises initiating a voltage change sequence (VCS) based on the second control signal and selecting a supply voltage of at least one of the first and second asymmetric cores based on the VCS.

[0067] In another feature, the method further comprises providing a plurality of the first asymmetric core, and selectively activating and deactivating more than one of the plurality of the first asymmetric core based on the CCS when operating in the first mode using the core switching module.

[0068] In another feature, the method further comprises providing a glue logic module, selectively communicating with the core switching module using the glue logic module, receiving interrupts via the glue logic module, receiving first signals from the application via the glue logic module, and routing the interrupts and the first signals to the one of the first and second asymmetric cores activated by the core switching module using the glue logic module.

[0069] In another feature, the method further comprises providing the first and second asymmetric cores and the core switching module in one of a system-on-chip (SOC) and a system-in-package (SIP).

[0070] In still other features, a system comprises first core means for executing an application when the system operates in a first mode. The first asymmetric core means is inactive when the system operates in a second mode. The system further comprises second asymmetric core means for executing the application when the system operates in the second mode. The system further comprises core switching means for switching operation between the first mode and the second mode. The core switching means selectively stops processing of the application by the first asymmetric core means after receiving a first control signal. The core switching means transfers a first state of the first asymmetric core means to the second asymmetric core means. The second asymmetric core means resumes executing the application in the second mode.

[0071] In another feature, the first control signal indicates that interrupts are disabled.

[0072] In another feature, the second asymmetric core means executes instructions without instruction translation when the second asymmetric core means resumes executing the application during the second mode.

[0073] In other features, the system further comprises an operating system (OS) that provides services to the application. The core switching module switches execution of the application between the first asymmetric core means and the second asymmetric core means transparently to the OS.

[0074] In other features, a first maximum speed of the first asymmetric core means is greater than a second maximum speed of the second asymmetric core means. The first asymmetric core means operates at frequencies greater than a predetermined frequency. The second asymmetric core means operates at frequencies less than the predetermined frequency. A first maximum operating power level of the first asymmetric core means is greater than a second maximum operating power level of the second asymmetric core means.

[0075] In other features, the first asymmetric core means uses a first instruction set architecture (ISA). The second asymmetric core means uses a second ISA. The first ISA is compatible with the second ISA. A first set of instructions of the first ISA is a superset of a second set of instructions of the second ISA. The first set includes more instructions than the second set.

[0076] In other features, the OS comprises a kernel. The core switching means executes above a level of the kernel.

[0077] In other features, the system further comprises hypervisor means for switching cores. The core switching means is integrated with the hypervisor means.

[0078] In other features, the core switching means saves the first state when the core switching means selectively stops processing of the application by the first asymmetric core means. The core switching means powers up the second asymmetric core means and initializes the second asymmetric core means using the first state. The interrupts are enabled after the second asymmetric core means resumes executing the application. The core switching means shuts down the first asymmetric core means when the second asymmetric core means powers up. One of no power and standby power is supplied to the first asymmetric core means after the first asymmetric core means is shut down.

[0079] In other features, the system further comprises level-2 (L2) cache means for caching instructions and data of the first asymmetric core means. One of no power and standby power is supplied to the L2 cache means after the first asymmetric core means is shut down.

[0080] In other features, the core switching means initializes the first asymmetric core means using the first state when the second asymmetric core means fails to power up. The first asymmetric core means resumes executing the application in the first mode and interrupts are enabled.

[0081] In other features, the core switching means switches operation of the system between the second mode and the first mode. The core switching means selectively stops processing of the application by the second asymmetric core means after receiving the first control signal indicating that interrupts are disabled. The core switching means transfers a second state of the second asymmetric core means to the first asymmetric core means. The first asymmetric core means resumes executing the application in the first mode.

[0082] In another feature, instructions are executed without instruction translation when the first asymmetric core means resumes executing the application during the first mode.

[0083] In other features, the system further comprises an operating system (OS) that provides services to the application. The core switching means switches execution of the application between the second asymmetric core means and the first asymmetric core means transparently to the OS.

[0084] In other features, the core switching means saves the second state when the core switching means selectively stops processing of the application by the second asymmetric core means. The core switching means powers up the first asymmetric core means and initializes the first asymmetric core means using the second state. The interrupts are enabled after the first asymmetric core means resumes executing the application.

[0085] In other features, the system further comprises level-2 (L2) cache means for caching instructions and data of the first asymmetric core means. Power is supplied to the L2 cache means after the first asymmetric core means powers up.

[0086] In other features, the core switching means shuts down the second asymmetric core means when the first asymmetric core means powers up. One of no power and standby power is supplied to the second asymmetric core means after the second asymmetric core means is shut down.

[0087] In other features, the core switching means initializes the second asymmetric core means using the second state when the first asymmetric core means fails to power up. The second asymmetric core means resumes executing the application in the second mode, and the interrupts are enabled.

[0088] In another feature, the system further comprises core profile means for generating a second control signal based on at least one of core utilization, resource utilization, and performance of the application.

[0089] In other features, the system further comprises core change sequence (CCS) means for initiating a CCS based on the second control signal. The core switching means switches execution of the application between one of the first and second asymmetric core means and another of the first and second asymmetric core means based on the CCS.

[0090] In other features, the CCS means initiates the CCS when the core utilization of the second asymmetric core means by the application is greater than or equal to a first predetermined threshold. The CCS means initiates the CCS when the core utilization of the second asymmetric core means by the application is greater than or equal to a second predetermined threshold for a first predetermined time period. The CCS means initiates the CCS when an anticipated core utilization of the second asymmetric core means is greater than or equal to a third predetermined threshold. The anticipated core utilization is determined based on at least one of a type of the application and a history of execution of the application. The CCS means initiates the CCS when the core utilization of the first asymmetric core means by the application is less than or equal to a fourth predetermined threshold. The CCS means initiates the CCS when the core utilization of the first asymmetric core means by the application is less than or equal to a fifth predetermined threshold for a second predetermined time period.

[0091] In another feature, the CCS means initiates the CCS based on at least one of a type of the application, a number of applications, and a type of instruction that is executed by one of the first and second asymmetric core means.

[0092] In another feature, the core profile means generates the second control signal based on a number of times execution of applications is switched between one of the first and second asymmetric core means and another of the first and second asymmetric core means.

[0093] In others feature, the system further comprises power control means for controlling power consumption of the system and for generating a third control signal based on the second control signal and the power consumption. The system further comprises core change sequence (CCS) means that initiates a CCS based on the third control signal. The core switching means switches execution of the application between one of the first and second asymmetric core means and another of the first and second asymmetric core means based on the CCS.

[0094] In another feature, the system further comprises frequency change sequence (FCS) means for initiating a FCS based on the second control signal and for selecting an operating frequency of at least one of the first and second asymmetric core means based on the FCS.

[0095] In another feature, the system further comprises voltage change sequence (VCS) means for initiating a VCS based on the second control signal and for selecting a supply voltage of at least one of the first and second asymmetric core means based on the VCS.

[0096] In another feature, the system further comprises power management means for disabling the interrupts when the system switches the operation between the first mode and the second mode and for disabling the interrupts when the system switches the operation between the second mode and the first mode.

[0097] In other features, the system further comprises a plurality of the first asymmetric core means. The core switching module selectively activates and deactivates more than one of the plurality of the first asymmetric core means based on the CCS when the system operates in the first mode.

[0098] In other features, the system further comprises glue logic means for selectively communicating with the core switching module. The glue logic means receives interrupts, receives first signals from the application, and routes the interrupts and the first signals to the one of the first and second asymmetric core means activated by the core switching module.

[0099] In another feature, a system-on-chip (SOC) comprises the system.

[0100] In another feature, a system-in-package (SIP) comprises the system.

[0101] In still other features, a computer program stored on a computer readable medium and executed by a processor comprises executing an application using a first asymmetric core when operating in a first mode. The first asymmetric core is inactive when operating in a second mode. The computer program further comprises switching operation between the first mode and the second mode using a core switching module. The computer program further comprises selectively stopping processing of the application by the first asymmetric core using the core switching module after receiving a first control signal. The computer program further comprises transferring a first state of the first asymmetric core to the second asymmetric core using the core switching module and resuming execution of the application in the second mode using the second asymmetric core.

[0102] In another feature, the computer program further comprises disabling interrupts and indicating via the first control signal that the interrupts are disabled.

[0103] In another feature, the computer program further comprises executing instructions without instruction translation when the second asymmetric core resumes executing the application during the second mode.

[0104] In another feature, the computer program further comprises providing services to the application via an operating system (OS) and switching execution of the application between the first asymmetric core and the second asymmetric core transparently to the OS using the core switching module.

[0105] In other features, the computer program further comprises selectively operating the first asymmetric core at a first maximum speed and selectively operating the second asymmetric core at a second maximum speed. The first maximum speed is greater than the second maximum speed. The computer program further comprises selectively operating the first asymmetric core at a first maximum operating power level and selectively operating the second asymmetric core at a second maximum operating power level. The first maximum operating power level is greater than the second maximum operating power level. The computer program further comprises selectively operating the first asymmetric core at frequencies greater than a predetermined frequency and selectively operating the second asymmetric core at frequencies less than the predetermined frequency.

[0106] In other features, the computer program further comprises operating the first asymmetric core using a first instruction set architecture (ISA) and operating the second asymmetric core using a second ISA. The first ISA is compatible with the second ISA. The computer program further comprises operating the first asymmetric core using a first set of instructions of the first ISA and operating the second asymmetric core using a second set of instructions of the second ISA. The first set is a superset of the second set. The first set includes more instructions than the second set.

[0107] In another feature, the computer program further comprises providing a kernel of the OS and executing the core switching module above a level of the kernel.

[0108] In another feature, the computer program further comprises providing a hypervisor module and integrating the core switching module with a hypervisor module.

[0109] In other features, the computer program further comprises saving the first state when the core switching module selective stops processing of the application by the first asymmetric core. The computer program further comprises powering up the second asymmetric core and initializing the second asymmetric core using the first state. The computer program further comprises enabling the interrupts after the second asymmetric core resumes executing the application. The computer program further comprises shutting down the first asymmetric core when the second asymmetric core powers up and supplying one of no power and standby power to the first asymmetric core after the first asymmetric core is shut down.

[0110] In other features, the computer program further comprises providing a level-2 (L2) cache. The first asymmetric core communicates with the L2 cache when the first asymmetric core is active. The computer program further comprises supplying one of no power and standby power to the L2 cache after the first asymmetric core is shut down.

[0111] In another feature, the computer program further comprises initializing the first asymmetric core using the first state when the second asymmetric core fails to power up, resuming execution of the application in the first mode using the first asymmetric core, and enabling interrupts.

[0112] In another feature, the computer program further comprises switching operation between the second mode and the first mode using a core switching module, selectively stopping processing of the application by the second asymmetric core using the core switching module after receiving the first control signal indicating that interrupts are disabled, transferring a second state of the second asymmetric core to the first asymmetric core using the core switching module, and resuming execution of the application in the first mode using the first asymmetric core.

[0113] In another feature, the computer program further comprises executing instructions without instruction translation when the first asymmetric core resumes executing the application during the first mode.

[0114] In another feature, the computer program further comprises providing services to the application via an operating system (OS) and switching execution of the application between the second asymmetric core and the first asymmetric core transparently to the OS using the core switching module.

[0115] In other features, the computer program further comprises saving the second state when the core switching module selectively stops processing of the application by the second asymmetric core. The computer program further comprises powering up the first asymmetric core and initializing the first asymmetric core using the second state. The computer program further comprises enabling the interrupts after the first asymmetric core resumes executing the application.

[0116] In other features, the computer program further comprises providing a level-2 (L2) cache. The first asymmetric core communicates with the L2 cache when the first asymmetric core is active. The computer program further comprises supplying power to the L2 cache after the first asymmetric core powers up.

[0117] In other features, the computer program further comprises shutting down the second asymmetric core when the first asymmetric core powers up and supplying one of no power and standby power to the second asymmetric core after the second asymmetric core is shut down.

[0118] In another feature, the computer program further comprises initializing the second asymmetric core using the second state when the first asymmetric core fails to power up, resuming execution of the application in the second mode using the second asymmetric core, and enabling the interrupts.

[0119] In another feature, the computer program further comprises generating a second control signal based on at least one of core utilization, resource utilization, and performance of the application.

[0120] In another feature, the computer program further comprises initiating a core change sequence (CCS) based on the second control signal and switching execution of the application between one of the first and second asymmetric cores and another of the first and second asymmetric cores based on the CCS using the core switching module.

[0121] In other features, the computer program further comprises initiating the CCS when the core utilization of the second asymmetric core by the application is greater than or equal to a first predetermined threshold. The computer program further comprises initiating the CCS when the core utilization of the second asymmetric core by the application is greater than or equal to a second predetermined threshold for a first predetermined time period. The computer program further comprises initiating the CCS when the core utilization of the first asymmetric core by the application is less than or equal to a third predetermined threshold. The computer program further comprises initiating the CCS when the core utilization of the first asymmetric core by the application is less than or equal to a fourth predetermined threshold for a first predetermined time period.

[0122] In another feature, the computer program further comprises determining an anticipated core utilization based on at least one of a type of the application and a history of execution of the application and initiating the CCS when the anticipated core utilization of the second asymmetric core is greater than or equal to a predetermined threshold.

[0123] In another feature, the computer program further comprises initiating the CCS based on at least one of a number of applications executed by one of the first and second asymmetric cores, a type of the application executed by one of the first and second asymmetric cores, and a type of instruction executed by one of the first and second asymmetric cores.

[0124] In another feature, the computer program further comprises generating the second control signal based on a number of times execution of applications is switched between one of the first and second asymmetric cores and another of the first and second asymmetric cores.

[0125] In another feature, the computer program further comprises controlling power consumption, generating a third control signal based on the second control signal and the power consumption, initiating a core change sequence (CCS) based on the third control signal, and switching execution of the application between one of the first and second asymmetric cores and another of the first and second asymmetric cores based on the CCS using the core switching module.

[0126] In another feature, the computer program further comprises initiating a frequency change sequence (FCS) based on the second control signal and selecting an operating frequency of at least one of the first and second asymmetric cores based on the FCS.

[0127] In another feature, the computer program further comprises initiating a voltage change sequence (VCS) based on the second control signal and selecting a supply voltage of at least one of the first and second asymmetric cores based on the VCS.

[0128] In another feature, the computer program further comprises providing a plurality of the first asymmetric core, and selectively activating and deactivating more than one of the plurality of the first asymmetric core based on the CCS when operating in the first mode using the core switching module.

[0129] In another feature, the computer program further comprises providing a glue logic module, selectively communicating with the core switching module using the glue logic module, receiving interrupts via the glue logic module, receiving first signals from the application via the glue logic module, and routing the interrupts and the first signals to the one of the first and second asymmetric cores activated by the core switching module using the glue logic module.

[0130] In still other features, a core switching system comprises a mode switching module, a core activation module, and a state transfer module. The mode switching module receives a switch signal to switch operation between a first mode and a second mode. During the first mode, instructions associated with applications are executed by a first asymmetric core, and a second asymmetric core is inactive. During the second mode, the instructions are executed by the second asymmetric core, and the first asymmetric core is inactive. The core activation module stops processing of the applications by the first asymmetric core after interrupts are disabled. The state transfer module transfers a state of the first asymmetric core to the second asymmetric core. The core activation module allows the second asymmetric core to resume execution of the instructions and enables the interrupts.

[0131] In another feature, the second asymmetric core executes the instructions without instruction translation when the second asymmetric core resumes executing the instructions during the second mode.

[0132] In another feature, a first maximum speed and a first maximum operating power level of the first asymmetric core are greater than a second maximum speed and a second maximum operating power level of the second asymmetric core, respectively.

[0133] In another feature, the core activation module supplies one of no power and standby power to the first asymmetric core when the second asymmetric core resumes execution of the instructions.

[0134] In other features, the core switching system further comprises a core profile module that generates an anticipated instruction execution rate for executing the applications based on at least one of a data cache miss rate, an instruction cache miss rate, and instructions per cycle executed by the first asymmetric core. The core profile module generates the switch signal based on the anticipated instruction execution rate.

[0135] In other features, the core switching system further comprises a core change sequence (CCS) module that generates a CCS based on the switch signal. The core activation module powers up one of the first and second asymmetric cores and shuts down another of the first and second asymmetric cores based on the CCS.

[0136] In still other features, a device comprises memory and a core switching module. The memory stores an operating system (OS) including a kernel that provides services to applications. The core switching module switches operation between a first mode and a second mode. During the first mode, instructions associated with the applications are executed by a first asymmetric core; and a second asymmetric core is inactive. During the second mode, the instructions are executed by the second asymmetric core, and the first asymmetric core is inactive. The core switching module operates at a level above the kernel.

[0137] In another feature, the core switching module switches between the first mode and the second mode transparently to the OS.

[0138] In other features, the core switching module comprises a mode switching module, a core activation module, and a state transfer module. The mode switching module receives a switch signal to switch operation between the first mode and the second mode. The core activation module stops processing of the applications by the first asymmetric core after interrupts are disabled. The state transfer module transfers a state of the first asymmetric core to the second asymmetric core. The core activation module allows the second asymmetric core to resume execution of the instructions and enables the interrupts.

[0139] In another feature, instructions are executed without instruction translation when the second asymmetric core resumes executing the instructions during the second mode.

[0140] In another feature, a first maximum speed and a first maximum operating power level of the first asymmetric core are greater than a second maximum speed and a second maximum operating power level of the second asymmetric core, respectively.

[0141] In another feature, the core switching module supplies one of no power and standby power to the first asymmetric core when the second asymmetric core resumes execution of the instructions.

[0142] In other features, the core switching system further comprises a core profile module that generates an anticipated instruction execution rate for executing the applications based on at least one of a data cache miss rate, an instruction cache miss rate, and instructions per cycle executed by the first asymmetric core. The core switching module switches operation between one of the first and second modes and another of the first and second modes based on the anticipated instruction execution rate.

[0143] In other features, the core switching system further comprises a core change sequence (CCS) module that generates a CCS based on at least one of a data cache miss rate, an instruction cache miss rate, and instructions per cycle executed by one of the first and second asymmetric cores. The core switching module powers up one of the first and second asymmetric cores and shuts down another of the first and second asymmetric cores based on the CCS.

[0144] In still other features, a method comprises executing instructions associated with applications using a first asymmetric core when a second asymmetric core is inactive during a first mode and executing the instructions using the second asymmetric core when the first asymmetric core is inactive during a second mode. The method further comprises receiving a switch signal to switch operation between the first mode and the second mode. The method further comprises disabling interrupts during the first mode based on the switch signal. The method further comprises stopping processing of the applications by the first asymmetric core after interrupts are disabled. The method further comprises transferring a state of the first asymmetric core to the second asymmetric core, allowing the second asymmetric core to resume execution of the instructions and enabling the interrupts.

[0145] In another feature, the method further comprises executing the instructions without instruction translation when the second asymmetric core resumes executing the instructions.

[0146] In other features, the method further comprises providing the first asymmetric core having a first maximum speed and a first maximum operating power level and providing the second asymmetric core having a second maximum speed and a second maximum operating power level. The first maximum speed and the first maximum operating power level are greater than the second maximum speed and the second maximum operating power level, respectively.

[0147] In another feature, the method further comprises supplying one of no power and standby power to the first asymmetric core when the second asymmetric core resumes execution of the instructions.

[0148] In other features, the method further comprises generating an anticipated instruction execution rate for executing the applications based on at least one of a data cache miss rate, an instruction cache miss rate, and instructions per cycle executed by the first asymmetric core. The method further comprises generating the switch signal based on the anticipated instruction execution rate.

[0149] In another feature, the method further comprises generating a core change sequence (CCS) based on the switch signal, powering up one of the first and second asymmetric cores based on the CCS, and shutting down another of the first and second asymmetric cores based on the CCS.

[0150] In still other features, a method comprises storing an operating system (OS) including a kernel that provides services to applications and executing instructions associated with the applications using a first asymmetric core when a second asymmetric core is inactive during a first mode. The method further comprises executing the instructions using the second asymmetric core when the first asymmetric core is inactive during a second mode. The method further comprises switching operation between the first mode and the second mode using a core switching module and executing the core switching module at a level above the kernel.

[0151] In another feature, the method further comprises switching between the first mode and the second mode transparently to the OS.

[0152] In another feature, the method further comprises receiving a switch signal to switch operation between the first mode and the second mode, stopping processing of the appli-

cations by the first asymmetric core after interrupts are disabled, transferring a state of the first asymmetric core to the second asymmetric core, allowing the second asymmetric core to resume execution of the instructions and enabling the interrupts.

[0153] In another feature, the method further comprises executing the instructions without instruction translation when the second asymmetric core resumes executing the instructions during the second mode.

[0154] In other features, the method further comprises providing the first asymmetric core having a first maximum speed and a first maximum operating power level and providing the second asymmetric core having a second maximum speed and a second maximum operating power level. The first maximum speed and the first maximum operating power level are greater than the second maximum speed and the second maximum operating power level, respectively.

[0155] In another feature, the method further comprises supplying one of no power and standby power to the first asymmetric core when the second asymmetric core resumes execution of the instructions.

[0156] In other features, the method further comprises generating an anticipated instruction execution rate for executing the applications based on at least one of a data cache miss rate, an instruction cache miss rate, and instructions per cycle executed by the first asymmetric core. The method further comprises switching operation between one of the first and second modes and another of the first and second modes based on the anticipated instruction execution rate.

[0157] In another feature, the method further comprises generating a core change sequence (CCS) based on at least one of a data cache miss rate, an instruction cache miss rate, and instructions per cycle executed by the first asymmetric core, powering up one of the first and second asymmetric cores based on the CCS, and shutting down another of the first and second asymmetric cores based on the CCS.

[0158] In still other features, a core switching system comprises mode switching means for switching operating modes. The mode switching means receives a switch signal to switch between a first mode and a second mode. During the first mode, instructions associated with applications are executed by first asymmetric core means for executing the instructions, and second asymmetric core means for executing the instructions is inactive. During the second mode, the instructions are executed by the second asymmetric core means, and the first asymmetric core means is inactive. The system further comprises core activation means for activating the first and second asymmetric core means. The core activation means stops processing of the applications by the first asymmetric core means after interrupts are disabled. The system further comprises state transfer means for transferring a state of the first asymmetric core means to the second asymmetric core means. The core activation means allows the second asymmetric core means to resume execution of the instructions and enables the interrupts.

[0159] In another feature, the instructions are executed without instruction translation when the second asymmetric core means resumes executing the instructions during the second mode.

[0160] In another feature, a first maximum speed and a first maximum operating power level of the first asymmetric core means are greater than a second maximum speed and a second maximum operating power level of the second asymmetric core means, respectively.

[0161] In another feature, the core activation means supplies one of no power and standby power to the first asymmetric core means when the second asymmetric core means resumes execution of the instructions.

[0162] In another feature, the core switching system further comprises core profile means for generating an anticipated instruction execution rate for executing the applications based on at least one of a data cache miss rate, an instruction cache miss rate, and instructions per cycle executed by the first asymmetric core means, and for generating the switch signal based on the anticipated instruction execution rate.

[0163] In other features, the core switching system further comprises core change sequence (CCS) means for generating a CCS based on the switch signal. The core activation means powers up one of the first and second asymmetric core means and shuts down another of the first and second asymmetric cores based on the CCS.

[0164] In still other features, a device comprises memory that stores an operating system (OS) including a kernel that provides services to applications. The device further comprises core switching means for switching operation between a first mode and a second mode. During the first mode, instructions associated with the applications are executed by first asymmetric core means for executing the applications, and second asymmetric core means for executing the applications is inactive. During the second mode, the instructions are executed by the second asymmetric core means, and the first asymmetric core means is inactive. The core switching means operates at a level above the kernel.

[0165] In another feature, the core switching means switches between the first mode and the second mode transparently to the OS.

[0166] In other features, the core switching means comprises mode switching means for receiving a switch signal to switch operation between the first mode and the second mode. The core switching means further comprises core activation means for stopping processing of the applications by the first asymmetric core means after interrupts are disabled. The core switching means further comprises state transfer means for transferring a state of the first asymmetric core means to the second asymmetric core means. The core activation means allows the second asymmetric core means to resume execution of the instructions and enables the interrupts.

[0167] In another feature, the instructions are executed without instruction translation when the second asymmetric core means resumes executing the instructions during the second mode.

[0168] In another feature, a first maximum speed and a first maximum operating power level of the first asymmetric core means are greater than a second maximum speed and a second maximum operating power level of the second asymmetric core means, respectively.

[0169] In another feature, the core switching means supplies one of no power and standby power to the first asymmetric core means when the second asymmetric core means resumes execution of the instructions.

[0170] In other features, the device further comprises core profile means for generating an anticipated instruction execution rate for executing the applications based on at least one of a data cache miss rate, an instruction cache miss rate, and instructions per cycle executed by the first asymmetric core means. The core switching means switches between one of the first and second modes and another of the first and second modes based on the anticipated instruction execution rate.

[0171] In other features, the device further comprises core change sequence (CCS) means for generating a CCS based on at least one of a data cache miss rate, an instruction cache miss rate, and instructions per cycle executed by the first asymmetric core means. The core switching means powers up one of the first and second asymmetric core means and shuts down another of the first and second asymmetric core means based on the CCS.

[0172] In still other features, a computer program stored on a computer readable medium and executed by a processor comprises executing instructions associated with applications using a first asymmetric core when a second asymmetric core is inactive during a first mode and executing the instructions using the second asymmetric core when the first asymmetric core is inactive during a second mode. The method further comprises receiving a switch signal to switch operation between the first mode and the second mode. The method further comprises disabling interrupts during the first mode based on the switch signal. The method further comprises stopping processing of the applications by the first asymmetric core after interrupts are disabled. The method further comprises transferring a state of the first asymmetric core to the second asymmetric core, allowing the second asymmetric core to resume execution of the instructions and enabling the interrupts.

[0173] In another feature, the computer program further comprises executing the instructions using without instruction translation when the second asymmetric core resumes executing the instructions during the second mode.

[0174] In other features, the computer program further comprises providing the first asymmetric core having a first maximum speed and a first maximum operating power level and providing the second asymmetric core having a second maximum speed and a second maximum operating power level. The first maximum speed and the first maximum operating power level are greater than the second maximum speed and the second maximum operating power level, respectively.

[0175] In another feature, the computer program further comprises supplying one of no power and standby power to the first asymmetric core when the second asymmetric core resumes execution of the instructions.

[0176] In other features, the computer program further comprises generating an anticipated instruction execution rate for executing the applications based on at least one of a data cache miss rate, an instruction cache miss rate, and instructions per cycle executed by the first asymmetric core. The computer program further comprises generating the switch signal based on the anticipated instruction execution rate.

[0177] In another feature, the computer program further comprises generating a core change sequence (CCS) based on the switch signal, powering up one of the first and second asymmetric cores based on the CCS, and shutting down another of the first and second asymmetric cores based on the CCS.

[0178] In still other features, a computer program stored on a computer readable medium and executed by a processor comprises storing an operating system (OS) including a kernel that provides services to applications and executing instructions associated with the applications using a first asymmetric core when a second asymmetric core is inactive during a first mode. The method further comprises executing the instructions using the second asymmetric core when the first asymmetric core is inactive during a second mode. The method further comprises switching operation between the first mode and the second mode using a core switching module and executing the core switching module at a level above the kernel.

[0179] In another feature, the computer program further comprises switching between the first mode and the second mode transparently to the OS.

[0180] In another feature, the computer program further comprises receiving a switch signal to switch operation between the first mode and the second mode, stopping processing of the applications by the first asymmetric core after interrupts are disabled, transferring a state of the first asymmetric core to the second asymmetric core, allowing the second asymmetric core to resume execution of the instructions and enabling the interrupts.

[0181] In another feature, the computer program further comprises executing the instructions without instruction translation when the second asymmetric core resumes executing the instructions during the second mode.

[0182] In other features, the computer program further comprises providing the first asymmetric core having a first maximum speed and a first maximum operating power level and providing the second asymmetric core having a second maximum speed and a second maximum operating power level. The first maximum speed and the first maximum operating power level are greater than the second maximum speed and the second maximum operating power level, respectively.

[0183] In another feature, the computer program further comprises supplying one of no power and standby power to the first asymmetric core when the second asymmetric core resumes execution of the instructions.

[0184] In other features, the computer program further comprises generating an anticipated instruction execution rate for executing the applications based on at least one of a data cache miss rate, an instruction cache miss rate, and instructions per cycle executed by the first asymmetric core. The computer program further comprises switching operation between one of the first and second modes and another of the first and second modes based on the anticipated instruction execution rate.

[0185] In another feature, the computer program further comprises generating a core change sequence (CCS) based on at least one of a data cache miss rate, an instruction cache miss rate, and instructions per cycle executed by the first asymmetric core, powering up one of the first and second asymmetric cores based on the CCS, and shutting down another of the first and second asymmetric cores based on the CCS.

[0186] Further areas of applicability of the present disclosure will become apparent from the detailed description provided hereinafter. It should be understood that the detailed description and specific examples are intended for purposes of illustration only and are not intended to limit the scope of the disclosure.

BRIEF DESCRIPTION OF THE DRAWINGS

[0187] The present disclosure will become more fully understood from the detailed description and the accompanying drawings, wherein:

[0188] FIG. 1A is a functional block diagram of an asymmetric multiprocessing (MP) system according to the prior art;

[0189] FIG. 1B is a functional block diagram of a symmetric MP system according to the prior art;

[0190] FIG. **2** is a functional block diagram of a symmetric MP system according to the present disclosure;

[0191] FIGS. **3**A and **3**B are functional block diagrams of an exemplary processing system including a high power core and a low power core according to the present disclosure;

[0192] FIG. **3**C is a functional block diagram of an exemplary control module of FIGS. **2**A and **2**B;

[0193] FIG. **3**D is a functional block diagram of an exemplary core utilization monitoring module of FIG. **3**A;

[0194] FIG. **4** is a flowchart of an exemplary method for operating a processing system including high power and low power cores;

[0195] FIG. **5** is a functional block diagram of another exemplary control module with first and second cores;

[0196] FIG. **6** is a flowchart of an exemplary method for operating the first and second cores of FIG. **5**;

[0197] FIG. **7** is a flowchart of another exemplary another method for operating the first and second cores of FIG. **5**;

[0198] FIGS. **8**A and **8**B are functional block diagrams of an exemplary core morphing system according to the present disclosure;

[0199] FIG. **9**A is a functional block diagrams of an exemplary power management system that dynamically switches cores according to the present disclosure;

[0200] FIG. **9**B is a functional block diagrams of another exemplary power management system that dynamically switches cores according to the present disclosure;

[0201] FIG. **9**C is a functional block diagram of an exemplary core switching module;

[0202] FIG. **10** is a flowchart of an exemplary method for switching cores using a core switching module integrated with a hypervisor module according to the present disclosure;

[0203] FIG. **11**A is a functional block diagram of an exemplary cellular phone;

[0204] FIG. **11**B is a functional block diagram of an exemplary wireless handset that communicates with a base station;

[0205] FIG. **11**C is a functional block diagram of an exemplary mobile device;

[0206] FIG. **11**D is a functional block diagram of an exemplary global positioning system (GPS); and

[0207] FIG. **11**E is a functional block diagram of a desktop computer and/or a server.

DETAILED DESCRIPTION

[0208] The following description is merely exemplary in nature and is in no way intended to limit the disclosure, its application, or uses. For purposes of clarity, the same reference numbers will be used in the drawings to identify similar elements. As used herein, the phrase at least one of A, B, and C should be construed to mean a logical (A or B or C), using a non-exclusive logical or. It should be understood that steps within a method may be executed in different order without altering the principles of the present disclosure.

[0209] As used herein, the term module refers to an Application Specific Integrated Circuit (ASIC), an electronic circuit, a processor or core (shared, dedicated, or group) and memory that execute one or more software or firmware programs, a combinational logic circuit, and/or other suitable components that provide the described functionality.

[0210] Most mobile computing devices execute applications that have different levels of complexity and/or processing requirements. Some applications can be efficiently executed using a single-core, low-speed processor while other applications can be efficiently executed using a single-core, high-speed processor. For example only, the low-speed processor may operate at speeds that are less than or equal to 500 MegaHertz (MHz) while the high-speed processor may operate at speeds that are greater than or equal to 1 GigaHertz (GHz). Other speed thresholds may be used.

[0211] Most mobile computing devices currently use only one single-core processor. Using the single-core processor to execute all types of applications requires power-performance tradeoffs. For example, using the single-core, low-speed processor may increase power savings and extend battery life at the expense of performance. Some processing-intensive applications may run slowly or not at all. Conversely, using the single-core, high-speed processor may increase performance while reducing battery life since the high-speed processor consumes more power even when executing applications requiring lower processing speed.

[0212] According to the present disclosure, both increased power savings and increased performance may be achieved in a mobile device by using a multi-core processing system with a low-speed, low-power (LP) core and a high-speed, high-power (HP) core. The LP core and the HP core may be implemented on the same IC or SOC or as separate ICs that are combined into a system-in-package (SIP). As will be described in further detail below, the multi-core processing system dynamically switches between the LP and HP cores depending on the type of applications being executed, the processing load, and/or other factors described herein.

[0213] Referring now to FIG. **2**, the mobile device may include an asymmetric multi-processing (MP) system **10** comprising a LP core **12** and a HP core **16**. An instruction set architecture (ISA) of the LP core **12** may differ from the ISA of the HP core **16**. For example, the HP core **16** may execute floating point instructions while the LP core **12** may not. Additionally, the LP and HP cores (hereinafter cores) **12** and **16** have different performance and capabilities (e.g., different processing speeds, power consumption, etc.). Alternately, both may use the same ISA's

[0214] According to the present disclosure, the asymmetric MP system **10** is operated in a pseudo-symmetric manner by achieving compatibility between the LP core **12** and the HP core **16**. Compatibility between the LP and the HP cores **12** and **16** may be achieved in many ways. For example, the LP and the HP cores **12** and **16** may use the same or similar key core registers/interfaces; the LP core **12** may use register mapping; and/or the LP core **12** may use an instruction set that is the same as or a subset of the instruction set of the HP core **16**.

[0215] Accordingly, an operating system (OS) and applications can run on both the LP and the HP cores **12** and **16**. The asymmetric MP system **10** dynamically switches between the LP and the HP cores **12** and **16** depending on the processing load and the types of applications being executed to increase power savings and improve performance as needed. The asymmetric MP system **10** can be used for general purpose processing (GPP).

[0216] The present disclosure uses core morphing to optimize power consumption and improve performance. Core morphing includes adaptive and dynamic switching of cores of MP systems. Specifically, low and high power cores are switched securely and transparently to the OS and/or the applications. In other words, the OS and applications may be unaware of which core is currently executing the processing load.

[0217] Core morphing can optimize battery life and performance. For example, battery life can be extended using the LP core to run applications when the processing load is low. On the other hand, high performance can be provided using the HP core to run applications when the processing load is high. Both power consumption and performance can be optimized by dynamically switching between the LP and the HP cores as needed.

[0218] In core morphing, cores are dynamically enabled (i.e., activated) or disabled (i.e., deactivated) based on the system load. The system load may be partly determined based on resource utilization and performance demanded by the applications. In some implementations, only one core may be active (i.e., executing applications) at a time. When one core is active, other cores may be disabled (i.e., deactivated) to save power. The other cores may be disabled in many ways. For example, the other cores may be put in a standby mode wherein the clock frequency and/or the supply voltage of the other cores may be decreased to values that are lower than when the cores are active. Alternatively, the other cores may be completely shut down by disconnecting the power supply to the cores.

[0219] When execution is switched from one core to another, the active core may transparently run the OS and applications. Specifically, when execution is switched from one core to another, the other core executes instructions without translation. Accordingly, the switching of cores is transparent or invisible to the OS and applications, which continue to run as if the system comprises a single core instead of multiple cores. Core morphing may be used in multi-core systems comprising one LP core and one HP core. When applications demand still higher performance than that provided by one HP core, multiple HP cores may be used.

[0220] Although dynamic core switching is discussed throughout the disclosure using mobile computing devices as an example, the dynamic core switching can be used in other computing systems including desktop computers, servers, etc. to reduce power consumption.

[0221] Before a detailed discussion, a brief overview of the figures is presented. FIGS. **3**A and **3**B show a multi-core processing system having a LP core and a HP core. FIG. **3**C shows a control module that switches cores of the multi-core processing system. FIG. **3**D shows a core utilization module of the control module. FIG. **4** illustrates a method for operating the multi-core processing system. FIG. **5** shows another system for switching cores of a multi-core processing system. FIGS. **6** and **7** illustrate methods for operating the multi-core processing system. FIGS. **8**A and **8**B show a glue logic module that operates one core when cores are switched during core morphing. FIG. **9**A shows a power management system that uses a core switching module to dynamically switch cores. FIG. **9**B shows a power management system that uses a core switching module to dynamically switch cores. FIG. **9**C shows an exemplary core switching module. FIG. **10** shows steps of a method for dynamically switching cores using the core switching module.

[0222] Referring now to FIG. **3**A, a processing system **20** according to the present disclosure is shown. The processing system **20** includes a HP core **24** with cache **26** and a LP core **28** with cache **30**. The processing system **20** can switch between the HP and LP cores **24** and **28** to reduce power consumption while still supporting processing at high speed as needed. The processing system **20** may be useful in extending battery life in mobile devices that operate on battery power. Both HP and LP cores **24** and **28** are capable of running the same operating system and/or applications. Additionally, both HP and LP cores **24** and **28** can execute instructions, states, and/or threads of each other and continue processing.

[0223] In the HP mode, the HP core **24** is in the active state and processes threads. The LP core **28** may also operate during the HP mode. In other words, the LP core **28** may be in the active state during all or part of the HP mode. To reduce power, however, the LP core **28** may be operated in the inactive state while the HP core **24** is in the active state.

[0224] In the LP mode, the LP core **28** operates in the active state and processes threads and the HP core **24** is in the inactive state. The inactive core may be completely turned off (no power supplied). Alternatively, standby power, which includes lower power levels than active power levels, may be supplied to the core in the inactive state to allow quicker transitions to the active state.

[0225] The HP and LP cores **24** and **28** may use the same or a similar operating system. The LP core **28** may use an ISA that is the same as or a subset of the ISA of the HP core **24**. The HP and LP cores **24** and **28** may be capable of running the same code and/or applications, albeit at different speeds. The HP and LP cores **24** and **28** may have the same or a similar architecture. The HP core **24** may have more processing capabilities (e.g., pipelines, stages, etc.) than the LP core **28**. Both HP and LP cores **24** and **28** may temporarily operate in the active state at the same time when transitioning from the LP mode to the HP mode and from the HP mode to the LP mode.

[0226] Memory **40** such as volatile and/or non-volatile memory stores first applications **42-1**, **42-2**, . . . , and **42**-P (collectively first applications **42**), second applications **44-1**, **44-2**, . . . , and **44**-Q (collectively second applications **44**), and/or third applications **46-1**, **46-2**, . . . , and **46**-R (collectively third applications **46**), where P, Q and R are integers greater than zero. The first applications **42** may include applications that require relatively low processing speed during operation and may be executed during LP or HP modes. In other words, the first applications **42** may comprise applications that are generally not very processor intensive. However, if a sufficient number of the first applications **42** are being executed concurrently, the processing system **20** may need to transition to and operate in the HP mode.

[0227] The second applications **44** may comprise applications that require medium processing speed (e.g., typically higher than the first applications **42** and lower than the third applications **46** on average). Depending upon the circumstances, the second applications **44** may require low, medium, or high processing speed. The third applications **46** may be applications that tend to require high processing speed and may be best operated in the HP mode. Both HP and LP cores **24** and **28** may be capable of running all three types of applications. Alternately, some applications may be limited to running using only the HP core **24**.

[0228] A control module **34** may be provided to selectively control transitions between the HP and LP modes. The control module **34** may receive a mode change request signal from another module or device. The control module **34** may monitor the transfer of instructions, states, threads, and/or information relating to the transfer such as registers, states, checkpoints, and/or program counters. Once the transfer is complete, the control module **34** may transition one of the HP and LP cores **24** and **28** to the inactive state.

[0229] The processing system **20** may be packaged in a variety of ways. For example, both the HP and LP cores **24** and **28** of the processing system **20** may optionally be implemented as a system on chip (SOC). Alternately, the processing system **20** may be packaged as multiple chips arranged as a system-in-package (SIP) or arranged on a printed circuit board (PCB). Still other packaging methods are contemplated.

[0230] Referring now to FIG. **3**B, the processing system **20** includes the HP core **24**, the LP core **28**, a shared register file **112**, and a control module **114**. The HP core **24** may be fabricated using a high leakage/high speed process. The LP core **28** may be fabricated using a low leakage/low speed process. The HP and LP cores **24** and **28** include transistors **106** and **110**, respectively. The transistors **106** of the HP core **24** tend to consume more power during operation in the active state than the transistors **110** of the LP core **28**. In some implementations, the transistors **106** may have higher leakage current than the transistors **110**. The transistors **106** may have a size that is greater than a size of the transistors **110**. Gates of the transistors **106** may be larger than gates of the transistors **110**. A gate count of the HP core **24** may be greater than the gate count of the LP core **28**.

[0231] The HP core **24** may have a more complex architecture than the LP core **28**. For example, the LP core **28** may have a smaller width and/or depth than the HP core **24**. The width may be defined by the number of parallel pipelines. The HP core **24** may include P_{HP} parallel pipelines **142** and the LP core **28** may include P_{LP} parallel pipelines **146**. In some implementations, P_{LP} may be less than P_{HP}. P_{LP} may be an integer greater than or equal to zero. When $P_{LP}=0$, the LP core **28** does not include any parallel pipelines. The depth may be defined by the number of stages. The HP core **24** may include S_{HP} stages **144** and the LP core **28** may include S_{LP} stages **148**. In some implementations, S_{LP} may be less than S_{HP}. S_{LP} may be an integer greater than or equal to one.

[0232] The register file **112** may be shared between the HP core **24** and the LP core **28**. Alternatively, each of the HP and the LP cores **24** and **28** may have a register file. The contents of the register file **112** may be transferred from an active core that is soon to be deactivated to the inactive core that is soon to be activated. The register file **112** may use predetermined address locations for registers, checkpoints, and/or program counters. For example, registers, checkpoints, and/or program counters that are used by the HP and/or LP cores **24** and/or **28**, respectively, may be stored in the same locations in register file **112**. Therefore, the HP core **24** and the LP core **28** can locate a particular register, checkpoint, and/or program counter when transitioning from one core to the other core. The register file **112** may be in addition to register files (not shown) in each of the HP and LP cores **24** and **28**, respectively. Threading may include single threading and/or multithreading.

[0233] The control module **114** may selectively control transitions between the HP and LP modes. The control module **114** may receive a mode change request signal from another module or device. The control module **114** may monitor the transfer of instructions, states, threads, and/or information relating to the transfer such as registers, states, checkpoints, and/or program counters. Once the transfer is complete, the control module **114** may transition one of the HP and LP cores **24** and **28** to the inactive state. The HP core **24**, the LP core **28**, the register file **112**, and/or the control module **114** may be implemented as a system on chip (SOC) **130**.

[0234] The HP core **24** may include cache **26**, and the LP core **28** may include cache **30**. The cache **26** may be larger in size than the cache **30**. The cache **26** may consume more power than the cache **30**. For example only, the cache **26** may include four-way cache while the cache **30** may include direct map cache. For example only, the HP core **24** may operate at speeds greater than or equal to 1 GHz while the LP core **28** may operate at speeds less than or equal to 500 MHz.

[0235] Referring now to FIG. **3**C, the control module **114** may include one or more of the following modules to manage operation of the processing system. The control module **114** may include a performance profile module **116**, an idle profile module **118**, a core profile module **120**, a thread transfer module **122**, and/or a cache monitoring module **124**.

[0236] The performance profile module **116** may monitor the performance of the applications being executed by the HP and the LP cores **24** and **28** and may generate profiles of system loading. Specifically, the performance profile module **116** may dynamically detect the types of workloads (e.g., whether the system load is CPU-bound, memory-bound, or both). Additionally, the performance profile module **116** may detect performance bottlenecks when the clock frequency and/or the supply voltage of the HP and LP cores **24** and **28** are varied.

[0237] The idle profile module **118** may monitor CPU utilization and determine a lowest possible clock frequency and/or supply voltage for operating the HP and LP cores **24** and **28**. The idle profile module **118** may minimize impact on performance based on workload while saving power for workloads having a high idle duty cycle.

[0238] Additionally, the idle profile module **118** may be used to maintain a lower power level in the HP and LP cores **24** and **28** when the HP and LP cores **24** and **28** are inactive, respectively. For example, the idle profile module **118** may operate a power supply to supply a low power level that is lower than an active operating power level (and greater than no power) and that is sufficient to allow the core that is inactive to quickly transition to an active state.

[0239] The cache monitoring module **124** may monitor cache miss rates when the HP and LP cores **24** and **28** execute applications. For example, the cache monitoring module **124** may monitor instruction cache miss rate and data cache miss rate of the HP and LP cores **24** and **28**.

[0240] The core profile module **120** may analyze information generated by the performance profile module **116**, the idle profile module **118**, and/or the cache monitoring module **124**. Based on the information, the core profile module **120** may monitor core utilization of the HP and the LP cores **24** and **28** when the applications are being executed. The core profile module **120** may indicate when the core utilization is at or below certain predetermined thresholds. The core profile module **120** may generate a mode change signal when a switch from the LP mode to the HP mode or from the HP mode to the LP is needed to optimize power consumption and performance. A power management system may utilize the mode change signal in determining whether to change mode as requested.

[0241] More specifically, the core profile module **120** may monitor processing speed of the HP and LP cores **24** and **28**, respectively. When the HP core **24** begins operating at a first processing speed below a first predetermined threshold, the

core profile module **120** may indicate a need to switch operation to the LP core **28**. When the LP core **28** begins operating at a second processing speed above a second predetermined threshold, the core profile module **120** may indicate a need to switch operation to the HP core **24**.

[0242] The first and second predetermined thresholds may be equal or unequal (to provide hysteresis). In other words, the first predetermined threshold may be lower than the second predetermined threshold. The first and second processing speeds may be averaged over first and second periods to prevent switching during momentary changes in the processing speed. The first and second periods can be set to different periods to facilitate or retard switching. The first period, the second period, the first predetermined threshold, and the second predetermined threshold may be preset by programmers or may be used-defined. By doing so, the user may control the power dissipation of the device including the processing system **20**. The thread transfer module **122** facilitates transfer of threads between the HP core **24** and the LP core **28** when the cores are switched.

[0243] Referring now to FIG. **3**D, the core profile module **120** may monitor system loading. For example, one or more core parameters of the HP and LP cores **24** and **28** may be monitored to provide an indication of core utilization. For example, the core profile module **120** may monitor processing speed, page file usage, input/output loading, thread count, cache usage, and/or application type. CPU usage may represent a ratio of the number of operations per unit of time relative to the capacity of the core. Page file usage may represent a ratio of the number of page files relative to the maximum number of page files. Thread count may be the number of active threads.

[0244] The core profile module **120** may use a single threshold. In other words, the transition to HP core **24** may occur when the CPU usage of the LP core **28** is above predetermined percentage during a predetermined period, the page file usage is greater than a predetermined number of page files, or the thread count is greater than a predetermined number of threads. The core profile module **120** may also combine criteria into more complex conditions. For example only, the core profile module **120** may require the processing speed of the LP core **28** to be above a predetermined percentage of maximum speed during a predetermined period and the input/output loading to be greater than a predetermined value. Hysteresis may be used as well. Still other combinations are contemplated.

[0245] Referring now to FIG. **4**, an exemplary method **300** for operating the processing system **20** is shown. Control begins in block **304** and proceeds to block **306**. In block **306**, control determines a current operating mode. If step **306** is equal to HP, control continues with step **308** and determines whether the mode signal is set to the LP mode. If step **308** is true, control continues with step **310** and increases power to the LP core **28** and the cache **30**. In step **312**, control determines whether the LP core **28** and the cache **30** are ready. In step **318**, control transfers instructions, states, threads, etc. running on the HP core **24** to the LP core **28**.

[0246] If step **306** is equal to LP, control continues with step **328** and determines whether the mode signal is set to the HP mode. If step **328** is true, control continues with step **330** and increases power to the HP core **24** and the cache **26**. In step **332**, control determines whether the HP core **24** and the cache **26** are ready. In step **338**, control transfers instructions, states, and/or threads running on the LP core **28** to the HP core **24**.

[0247] Referring now to FIG. **5**, another exemplary system with HP and LP cores is shown. The system includes a LP core **200** that includes level one (L1) cache **202** and a HP core **204** that includes L1 cache **206**. The LP and HP cores **200** and **204** may communicate via a bus **205**. A high-speed memory **210** may be provided. The high-speed memory **210** may comprise static random access memory (SRAM) or other suitable high-speed memory. The LP and HP cores **200** and **204** may be implemented as separate ICs and arranged as a system-in-package (SIP), or integrated as an IC or SOC. The high-speed memory **210** may also be integrated with one or both of the LP and HP cores **200** and **204**.

[0248] The LP and HP cores **200** and **204** may also have some or all of the attributes described herein. The LP core **200** may have a smaller core than the HP core **204**. In addition to the L1 cache **202** and **206**, level 2 (L2) cache **208** may also be provided. The L1 cache **202** and **206** may be integrated with the respective LP and HP cores **200** and **204**. The L2 cache **208** may be utilized by one or both of the cores **200** and **204**. Since the L2 cache **208** generally tends to have high leakage current and/or power consumption, use of the L2 cache may be restricted to the HP core **204** if desired. In some implementations, the HP core **204** may comprise multiple identical cores.

[0249] The LP and HP cores **200** and **204** may execute the same operating system (OS) with different ISAs and can execute the same code. A kernel module **220**, which is a component of the OS, manages system resources. For example only, the OS may include Linux® or other suitable operating system. The kernel module **220** provides a lowest level abstraction layer for resources (e.g., the high-speed memory **210** or main memory **228**, LP and HP cores **200** and **204**, and input/output devices **234**) that applications **224** (e.g., applications **224-1**, **224-2**, . . . and **224**-P) control when performing their functions. The kernel module **220** typically provides these resources to processes of the applications **224** through inter-process communication mechanisms and system calls.

[0250] During boot up, a boot loader typically starts executing the kernel module **220**. The kernel module **220** initializes itself and starts a first process. Subsequently, the kernel module **220** generally executes in response to external events such as system calls used by applications **224** to request services from the kernel module **220** or via interrupts used by hardware components to notify the kernel module **220** of events. The kernel module **220** may also execute an idle process loop when no processes are available to run.

[0251] A power management system (PMS) module **242** may be provided to manage power consumption and to initiate or control changes in system operation based on the monitored system loading. A core profile module **240** may monitor system loading such as core loading, input/output loading, application loading, and/or loading based on other system operating parameters.

[0252] For example, the PMS module **242** may control switching between different operating frequencies of the LP core **200** based on demand. In other words, the PMS module **242** may handle transitions between one of T different operating speeds of the LP core **200**, where T is an integer greater than one, based on system loading. For example, under low load conditions, the LP core **200** may initially operate at speeds below 100 MHz. As system loading increases, the PMS module **242** may need to increase operating speed to 200 MHz. As can be appreciated, operation at higher speeds may

also be associated with higher power consumption. The increase in speeds may be accomplished by raising supply voltage V_{dd} to the LP core **200** and/or to related clocking circuitry. Additional speed steps may be employed to increase the operating speed of the LP core **200** up to a maximum processing speed thereof.

[0253] When the LP core **200** reaches its highest operating speed and additional system loading occurs, the core profile module **240**, the PMS module **242**, and/or the kernel module **220** disable interrupts and generate a system call to a hypervisor module **213** or a core switching module **212** to trigger a transition. The core switching module **212** may be standalone or may be integrated with the hypervisor module **213**. The core switching module **212** may transition (switch) the operation from the LP core **200** to the HP core **204** in response to the system call and return control to the kernel module **220** after the transition (switching) is complete.

[0254] The term hypervisor generally refers to a virtualization platform that allows multiple operating systems to run at the same time on a host computer. The hypervisor may be used to safely suspend operation of one OS while the other OS is operating. The hypervisor typically operates above the kernel. Alternatively, the hypervisor may operate below the kernel.

[0255] In the present disclosure, the term hypervisor refers to a virtualization platform that allows a host device to use multiple asymmetric processors using the same OS. The hypervisor is operated in a trusted zone in contrast to other user applications that are not in a trusted zone. The trusted zone is a safe environment providing code isolation where services can be executed securely without external interrupts. The hypervisor manages transfers between the processors and suspends operation of one asymmetric processor while the other asymmetric processor operates. Alternatively, the hypervisor may be used to run multiple asymmetric processors using multiple OSs.

[0256] Depending on whether the core switching module **212** is integrated in the hypervisor module **213**, the hypervisor module **213** or the core switching module **212** is loaded into the high-speed memory **210** from RAM or other storage after boot up. The core switching module **212** switches cores in a trusted zone. The PMS module **242** disables interrupts to one of the LP and HP cores **200** and **204** when operation of one core is suspended and handed over to another core. The hypervisor module **213** and/or the core switching module **212** provide hardware abstraction by isolating the cores from the OS and applications and make switching cores transparent to the OS and applications.

[0257] The core switching module **212** executes at a level above the kernel module **220**. Since the core switching module **212** switches cores transparently to the OS and applications, the OS and applications can run unaltered when the core switching module **212** switches cores.

[0258] After the interrupts are disabled by the PMS module **242**, the core switching module **212** copies the state of the LP core **200**, activates the HP core **204**, and initializes the HP core **204** with the state of the LP core **200**. After the HP core **204** is initialized, the core switching module **212** deactivates the LP core **200**. The HP core **204** resumes executing the application, and the PMS module **242** enables the interrupts.

[0259] After executing instructions using the HP core **204**, system loading may eventually decrease. When the system loading decreases to a predetermined point, the core switching module **212** may transition operation from the HP core **204** back to the LP core **200**. As can be appreciated, systems employing core switching may benefit from the low power consumption of the LP core **200** when relatively low processing speed is required. When high speed processing is desired, the HP core **204** can be used and then turned off when the processing load decreases sufficiently.

[0260] Referring now to FIG. **6**, steps of a method for operating the LP and HP cores **200** and **204** of FIG. **5** are shown. Control begins with step **250**. In step **252**, the core profile module **240** monitors system loading of the LP core **200**. In step **256**, the core profile module **240** determines whether there is a need to switch to the HP core **204**. If step **256** is false, control returns to step **252**.

[0261] If step **256** is true, a control message is sent to the core switching module **212**. The core switching module **212** reads the state (pointers, registers, opcodes, operands, program counters (PC), etc.) of the LP core **200** and copies the state or information representative of the state of the LP core **200** into the high-speed memory **210** in step **260**. In step **264**, the core switching module **212** transitions the HP core **204** to the active state. The core switching module **212** loads the state of the LP core **200** from the high-speed memory **210** into the HP core **204** in step **268**. In step **272**, the core switching module **212** transitions the LP core **200** to the inactive state. In step **276**, the HP core **204** resumes execution at the state loaded into the HP core **204**. In other words, operation resumes at the same program counter value where the LP core **200** entered the inactive state.

[0262] In step **280**, after completing the instructions loaded from the LP core **200**, the HP core **204** may begin executing at the application level. In step **288**, the core profile module **240** monitors system loading of the HP core **204**. In step **292**, the core profile module **240** determines whether there is a need to switch to the LP core **200**.

[0263] If step **292** is false, control returns to step **288**. Otherwise if step **292** is true, the core switching module **212** reads the state of the HP core **204** and copies the state or information representative of the state of the HP core **204** into the high-speed memory **210** in step **296**. Alternatively, the state may be copied directly to the core to be activated. In step **300**, the core switching module **212** transitions the LP core **200** to the active state. In step **306**, the core switching module **212** loads the state of the HP core **204** from the high-speed memory **210** into the LP core **200**.

[0264] In step **310**, the HP core **204** transitions to the inactive state. In step **320**, the LP core **200** resumes execution at the loaded state. In step **324**, after completing the loaded instructions, the LP core **200** executes at the application level, and control returns to step **252**.

[0265] Referring now to FIG. **7**, steps of another method for operating the LP and HP cores **200** and **204** of FIG. **5** are shown. Control begins in step **328**. In step **330**, control determines whether the LP core **200** is active. If step **330** is true, the core profile module **240** monitors the system loading or speed of the LP core **200**. In step **338**, the core profile module **240** monitors the types of applications that are executing. In step **342**, control determines whether any of the applications are designated HP type.

[0266] When an application is designated as the HP type application, an immediate transition to the HP core **204** may occur when the application is launched. HP type applications may be programmed and/or user designated. Alternately, HP applications may be selected based on a battery charge state. In other words, the application may default to HP core opera-

tion except when the batteries are low. When the batteries are low, the application may be forced to operate on the LP core with reduced operating speed or not at all. Still other applications may execute exclusively on the HP core **204**.

[0267] If step **342** is false, control determines in step **348** whether the system loading is greater than a first threshold. If step **348** is false, control returns to step **330**. If step **348** is true, control continues with step **352** and transitions to the HP core **204** using the core switching module **212**. In step **356**, the core profile module **240** monitors the system loading of the HP core **204**. In step **360**, control determines whether the system loading is less than a second threshold. If step **360** is false, control returns to step **356**. If step **360** is true, control transitions to the LP core **200** in step **376**, and control returns to step **330**.

[0268] If step **342** is true, control continues with step **364** and transitions to the HP core **204** using the core switching module **212**. In step **368**, control determines whether the HP type application is closed or otherwise terminated. If step **368** is false, the HP core **204** continues executing the HP type application. If step **368** is true, control continues with step **372** and determines whether the system loading after closing the HP type application is less than a second speed threshold. If step **372** is false, control returns to step **372**. If step **372** is true, control transitions to the LP core **200** in step **376**, and control returns to step **330**.

[0269] Core switching can be transparent to the OS and the applications when the LP core can resemble or look like the HP core to the rest of the hardware and software of the mobile computing device. When the LP core resembles the HP core, threads scheduled for the LP core may be scheduled for the HP core and vice versa without any modification or thread-coloring. In other words, applications may be executed by either core without regard to characteristics of threads of either core. Accordingly, the core switching becomes transparent to the OS and applications.

[0270] The LP core can resemble the HP core when the LP and the HP cores have identical or compatible key core registers and interfaces. Examples of key core registers and interfaces include a CPUID register, a debug register, a cache organization & control register, a CP register, a trace macro, a memory management unit (MMU), and a performance management unit (PMU). Additionally, or alternatively, the LP core may implement a register mapping interface and/or a microsequencer to achieve dynamic compatibility with the HP core. Alternatively, or additionally, the instruction set of the LP core may be the same as or a subset of the instruction set of the HP core.

[0271] Referring now to FIGS. **8**A and **8**B, a glue logic module **380** may be used to enable (i.e., activate) only one core at a time when cores are being switched by a core switching module. In FIG. **8**A, the glue logic module **380** may receive external interrupts (e.g., IRQ and FIQ) and other inputs (e.g., trace macro and debug) from other hardware and software of the mobile device. Additionally, the glue logic module **380** may receive wakeup exchange signals from the LP and HP cores **200** and **204** when the LP and HP cores **200** and **204** are being switched. The wakeup exchange signals indicate when one of the LP and HP cores **200** and **204** wakes up and the other shuts down during core switching. Based on the wakeup exchange signals, the glue logic module **380** may route the interrupts and other inputs to one of the LP and HP cores **200** and **204** that is active after cores are switched.

[0272] Specifically, in FIG. **8**B, the glue logic module **380** may comprise an interrupt control and mux device **382**, a trace macro and debug mux device **384**, and a mux control module **386**. The interrupt control and mux device **382** may receive the external interrupts and may generate masked interrupts and wait-for-interrupt (WFI) signals for the LP and the HP cores **200** and **204** based on the external interrupts. The trace macro and debug mux device **384** may receive the trace macro and debug inputs for the LP and the HP cores **200** and **204**.

[0273] The mux control module **386** may receive the wakeup exchange signals and may generate a mux control signal based on the wakeup exchange signals. The mux control signal may indicate which one of the LP and HP cores **200** and **204** is active at a time after core switching is complete. Alternatively, the core switching module may control the interrupt control and mux device **382** and the trace macro and debug mux device **384** based on the wakeup exchange signals.

[0274] Based on the mux control signal, the interrupt control and mux device **382** may route the masked interrupts and the WFI signals to one of the LP and the HP cores **200** and **204** that is active after cores are switched. The trace macro and debug mux device **384** may route the trace macro and/or debug signals to one of the LP and the HP cores **200** and **204** that is active after cores are switched. Thus, only one of the LP and the HP cores **200** and **204** is active and executes applications at a time.

[0275] The LP and HP cores **200** and **204** have symmetric communication capabilities since the glue logic module **380** symmetrically communicates with the LP and HP cores **200** and **204**. Specifically, the signals generated by the interrupt control and mux device **382** and the trace macro and debug mux device **384** are symmetrically communicated to the LP and HP cores **200** and **204**. Thus, regardless of which of the LP and HP cores **200** and **204** is active at a time, the hardware interfacing and signaling capabilities of the LP and HP cores **200** and **204** are similar. This enables other hardware of the mobile device to communicate with either core without regard or without identifying which core is active.

[0276] Additionally, due to the symmetric communication, the programmability of the LP and HP cores **200** and **204** is similar. Specifically, the applications can run transparently on the LP or the HP core **200**, **204** that is active without regard or without identifying which core is active. The hardware and software transparency or symmetry provided by the glue logic module **380** enables hardware and software vendors to use, modify, develop, and/or add products normally as if only one core is present.

[0277] When the HP core **204** comprises multiple identical cores, the interrupt control and mux device **382** may generate masked interrupts and WFI signals for the respective cores. Additionally, the trace macro and debug mux device **384** may route the trace macro and debug signals to the respective cores.

[0278] Referring now to FIGS. **9**A and **9**B, a power management system (PMS) **400** that optimizes power consumption of the mobile device using dynamic core switching is shown. In FIG. **9**A, the PMS **400** comprises a PMS module **402**, a core sequence module **413**, a core switching module **414**, and the glue logic module **380**. In some implementations, core switching module **414** may be integrated with a hypervisor module **415**. The PMS module **402** comprises a power control module **404**, a performance profile module

406, an idle profile module **408**, an OS task profile module **410**, and a core profile module **412**. The PMS module **402** manages power consumption based on user profiles, types of applications being executed, inputs received from the OS, and states of various hardware devices received via respective device drivers.

[0279] The power control module **404** may receive inputs related to power/performance from a user via user profiles. For example, the user may specify performance levels for applications regardless of power consumption entailed. Additionally, the power control module **404** may receive inputs from the performance profile module **406**, the idle profile module **408**, the OS task profile module **410**, and the core profile module **412**.

[0280] The performance profile module **406** may generate outputs indicating current performance and demanded or desired performance for applications. For example, the performance profile module **406** may indicate to the power control module **404** and the core profile module **412** parameters including current core utilization by the applications, cache miss rates, and whether the system load is memory bound, core bound, or I/O bound. The performance profile module **406** may generate the outputs partly based on inputs received from an OS services module **416**, a device driver module **418**, and cores **420**. The cores **420** may comprise LP and one or more HP cores.

[0281] The OS services module **416** may comprise a kernel input/output control (IOCTL) module **422** and a scheduling module **424**. The kernel IOCTL module **422** may report current I/O usage to the power control module **404**. The scheduling module **424** may schedule OS tasks. Examples of OS tasks include number of tasks, number of processes, and thread quantum. The schedule of OS tasks is monitored by the OS task profile module **410** and reported to the power control module **404**. The idle profile module **408** may receive inputs from the OS services module **416** and may report to the power control module **404** when the cores **420** are idle.

[0282] The device driver module **418** may comprise device drivers that control the hardware devices of the mobile computing device. For example, the device driver module **418** may comprise a battery driver module **426** that controls the battery of the mobile computing device based on signals received from the PMS module **402**. The battery driver module **426** may report status of the battery to the power control module **404**.

[0283] Additionally, the device driver module **418** may comprise a power management interrupt control (PMIC) module **428** that controls power consumed by the hardware devices based on inputs received from the PMS module **402**. The device driver module **418** may comprise a performance monitoring unit (PMU) module **430** that monitors performance or resource utilization parameters. The resource utilization parameters may include memory usage, cache usage, bus usage, I/O usage, and CPU usage by the OS and the applications being executed by the cores **420**. The PMU module **430** may report resource utilization parameters to the performance profile module **406**. Specifically, the PMU module **430** may report when the various resource utilization parameters cross (i.e., exceed or fall below) respective predetermined thresholds when applications are executed by one of the cores **420**. The thresholds may be programmable.

[0284] The device driver module **418** may further comprise a device timeout and state monitoring module **432** that monitors states of the hardware devices. The device timeout and state monitoring module **432** reports to the power control module **404** when any of the hardware devices are idle or have timed out due to lack of adequate resources available to perform requested tasks. The power control module **404** may shut down idle hardware devices to save power. Alternatively, the power control module **404** may activate (i.e., initiate power up) additional resources so that the hardware devices may render performance by completing the requested tasks instead of timing out.

[0285] The core profile module **412**, the core sequence module **413**, and the core switching module **414** enable core morphing. The core profile module **412** may anticipate or predict power/performance demand based on a history or log of execution of applications. For example, the core profile module **412** may predict a number of million instructions per second (MIPS) requirement of an application based on data cache miss rate, instruction cache miss rate, and/or instructions per cycle being executed by one of the cores **420** that is active. The core profile module **412** may receive the history from at least one of the performance profile module **406**, the idle profile module **408**, and the OS task profile module **410**. Based on the history, the core profile module **412** can anticipate or predict the power/performance that the applications may demand.

[0286] The core profile module **412** may generate an event when the power/performance requirement changes to a value greater or less than a threshold value. For example, the core profile module **412** may generate an event when the core utilization or cache miss rate exceeds respective predetermined threshold values. The event is a request for switching cores according to the change in the power/performance demand. Additionally, the core profile module **412** may monitor a frequency of core switching and generate the event to minimize thrashing (i.e., unnecessary switching of cores **420**). For example, the core profile module **412** may monitor a number of times the cores **420** are switched in a predetermined time period. The core profile module **412** may generate the event when the number exceeds a dynamically programmable threshold. When the event is received, the power control module **404** may decide to switch cores based solely on the event. Alternatively, the power control module **404** may analyze all the information received including resource utilization (past, current, and projected) and determine whether to switch cores.

[0287] Occasionally, the power control module **404** may override the core profile module **412** and decide not to switch cores notwithstanding the event. For example, when the mobile device is powered by line power and the HP core is the active core, the power control module **404** may not switch cores although the event may indicate that the performance requirement is low. Alternatively, when the HP core is the active core and the application is designated as a high-performance application, the power control module **404** may not switch cores although the mobile device is not powered by line power and the event requests a switch to the LP core due to low battery.

[0288] In FIG. **9**B, the core sequence module **413** may comprise a frequency change sequence (FCS) module **434**, a voltage change sequence (VCS) module **436**, and a core change sequence (CCS) module **438**. When an event is signaled by the core profile module **412**, the power control module **404** may generate at least one of three calls to the kernel IOCTL module **422**: a FCS call, a VCS call, and/or a CCS call. The kernel IOCTL module **422**, in turn, may gen-

erate at least one of three sequences: a frequency change sequence, a voltage change sequence, and/or a core change sequence.

[0289] Based on the frequency change sequence received, the FCS module **434** may generate signals that change the clock frequency of the active core. Based on the voltage change sequence received, the VCS module **436** may generate signals that change the supply voltage of the active core. Based on the core change sequence received, the CCS module **438** may generate signals that switch the cores **420**. The CCS module **438** may initiate the core change sequence in conjunction with the frequency and/or the voltage change sequence. The core change sequences decrease system overhead, system latency, and core transition time. The CCS module **438** is now described in more detail.

[0290] When the power control module **404** decides to switch the cores, the PMS module **402** disables interrupts and generates a system call to the hypervisor module **415** and/or the core switching module **414** to switch cores **420**. Based on the system call, the CCS module **438** generates a call and outputs the call to the hypervisor module **415** and/or the core switching module **414**. The hypervisor module **415** and/or the core switching module **414** switches the cores **420**. After the cores **420** are switched, the hypervisor module **415** and/or the core switching module **414** returns control to the kernel IOCTL module **422** and/or the OS services module **416**. Subsequently, the newly activated core resumes operation, and the PMS module **402** enables interrupts.

[0291] Following are some examples when the CCS module **438** may initiate the core change sequence. The CCS module **438** may initiate the core change sequence to switch from the LP core to the HP core when the core utilization of the LP core is greater than or equal to a high predetermined threshold. For example only, the high predetermined threshold may be a percentage such as 80% or 90%. The CCS module **438** may initiate the core change sequence when the core utilization of the LP core is greater than or equal to the high predetermined threshold for a predetermined time period. The predetermined time period may be short or long. For example only, the predetermined time period may be two or ten seconds. The high predetermined threshold and the predetermined time period can be programmed to optimize performance, power, and minimize core switching that may be unnecessary.

[0292] The CCS module **438** may initiate the core change sequence when an anticipated core utilization of the LP core is greater than or equal to the high predetermined threshold. The anticipated core utilization may be determined based on the type of the application being executed and/or the history of execution of the application. For example only, applications tagged by the user as requiring high performance may initiate a core switch from the LP core to the HP core.

[0293] The CCS module **438** may initiate the core change sequence to switch from the HP core to the LP core when the core utilization of the HP core is less than or equal to a low predetermined threshold. For example only, the low predetermined threshold may be a percentage such as 5% or 10%. The CCS module **438** may initiate the core change sequence when the core utilization of the HP core is less than or equal to the high predetermined threshold for a predetermined time period. The predetermined time period may be short or long. For example only, the predetermined time period may be two or ten seconds. The low predetermined threshold and the predetermined time period can be programmed to optimize performance, power, and minimize core switching that may be unnecessary.

[0294] The CCS module **438** may initiate the core change sequence based on the number of applications being executed by one of LP and HP cores. For example only, the cores may be switched from the LP core to the HP core when the number of applications being executed is 10 or more and from the HP to the LP core when the number of applications being executed is 10 or less. The CCS module **438** may initiate the core change sequence based on the type of applications. For example only, the cores may be switched from the LP core to the HP core when the application being executed is designated as requiring high performance. Finally, the CCS module **438** may initiate the core change sequence based on the type of instruction that is scheduled for execution by one of the cores. For example only, cores may be switched from the LP core to the HP core when the LP core is executing an application and an instruction scheduled for execution can be executed by the HP core instead of the LP core.

[0295] More specifically, the CCS module **438** may generate signals that switch the cores **420** as follows. When the CCS module **438** receives the core change sequence, the CCS module **438** outputs the call to the hypervisor module **415** and/or the core switching module **414**. The core switching module **414** switches the cores **420** according to the core change sequence. Specifically, the core switching module **414** transfers the state of the active core to the inactive core, performs handshaking between the active and the inactive cores **420**, and performs core switching as follows.

[0296] The core switching module **414** begins core switching when the PMS module **402** disables interrupts to the cores **420**. The core switching module **414** suspends execution of the OS and the applications and isolates the cores **420** from the OS and the applications. The core switching module **414** may save the state of the active core that include core registers, CP registers, stack pointer, program counter, PMU events, and MMU configuration. The core switching module **414** activates the inactive core by turning on or increasing power supply to the clock, L2 cache (e.g., if the inactive core is the HP core), and the inactive core.

[0297] Based on the wakeup exchange signals received from the inactive core, the core switching module **414** determines if the inactive core wakes up (i.e., powers up) within a predetermined time after wakeup signals are output to the inactive core. If the inactive core does not acknowledge (i.e., does not wake up or power up) within the predetermined time, the core switching module **414** reloads the state of the active core. The core switching module **414** returns control to the kernel IOCTL module **422** and/or the OS services module **416**. The active core resumes executing the application according to the reloaded state, and the PMS module **402** enables interrupts to the active core.

[0298] Instead, if the core switching module **414** receives an acknowledgement from the inactive core within the predetermined time, the core switching module **414** transfers the state of the previously active core to the newly activated core. The core switching module **414** initializes the newly activated core with the state of the previously active core. After the newly activated core is initialized, the core switching module **414** shuts down the previously active core to the inactive state by turning off or reducing the power supply to the clock, L2 cache (e.g., if the previously active core is the HP core), and the previously active core. The core switching module **414**

returns control to the kernel IOCTL module **422** and/or the OS services module **416**. The newly activated core resumes executing the application according to the loaded state. The PMS module **402** enables interrupts to the active core. Thus, the core switching module **414** switches cores securely and in isolation from the OS and the applications and makes the core switching transparent to the OS and the applications.

[0299] When the core switching module **414** switches operation from the LP core to the HP core, the OS and applications continue to run as if they would continue to execute on a single core with a stepped-up frequency or supply voltage. On the other hand, when the core switching module **414** switches operation from the HP core to the LP core, the OS and applications continue to run as if they would continue to execute on a single core with a stepped-down frequency or supply voltage.

[0300] The core switching module **414** and/or the hypervisor module **415** may communicate to the glue logic module **380** the handshaking information exchanged by the cores **420** during core switching. The handshaking information may include signals that indicate which one of the cores **420** is active, when interrupts are disabled/enabled, etc. Based on the handshaking signals, the glue logic module **380** routes interrupts and other signals from the application to one of the cores **420** that is active.

[0301] In use, Core**1** may be the LP core, and Core**2** may be the HP core. The mobile computing device may normally execute most applications using Core**1**. Core**1** may operate at a frequency and voltage level specified by the frequency change sequence and the voltage change sequence, respectively. The frequency change sequence may include control signals that increase or decrease the clock frequency of the active core sequentially as needed. The voltage change sequence may include control signals that increase or decrease the supply voltage of the active core sequentially as needed.

[0302] When high performance is required (e.g., when utilization of Core**1** is maximum at current clock frequency and supply voltage), the FCS module **434** may vary the clock frequency of Core**1** within a frequency range from low to high based on the frequency change sequence generated for Core**1** until the highest and/or desired operating frequency of Core**1** is reached. Alternatively, or additionally, the VCS module **436** may change the supply voltage of Core**1** within a voltage range from low to high based on the voltage change sequence generated for Core**1** until the highest and/or desired operating supply voltage of Core**1** is reached.

[0303] When still higher performance is demanded by the application (i.e., when utilization of Core**1** is maximum at the highest frequency and voltage), the core switching module **414** may begin core switching. The core switching module **414** may activate Core**2**, handover the state of Core**1** to Core**2**, and shut down Core**1** or otherwise render Core**1** inactive. Specifically, the core switching module **414** may deactivate Core**1** and copy the state of Core**1**. Then the core switching module **414** may power up Core**2**. On powering up, when Core**2** initializes, the core switching module **414** may handover the state of Core**1** to Core**2**. That is, the core switching module **414** may reset Core**2** with the state of Core**1**. Thereafter, the core switching module **414** may shut down Core**1**. Core**2** may resume executing the application where Core**1** entered the inactive state using the state of Core**1**. The PMS module **402** may enable interrupts. The scheduling module **424** may schedule threads that were to be executed by Core**1** for execution by Core**2**.

[0304] Initially, Core**2** may operate at a frequency and voltage level specified by the frequency change sequence and the voltage change sequence, respectively. Subsequently, the FCS module **434** may change the clock frequency of Core**2** within a frequency range from low to high and then from high to low according to the performance level demanded by the application. Alternatively, or additionally, the VCS module **436** may vary the supply voltage of Core**2** within a voltage range from low to high and from high to low according to the performance level demanded by the application. If the HP core comprises a plurality of Core**2**, each additional Core**2** may be activated and deactivated as the performance level demanded by the application continues to vary.

[0305] When the performance level demanded by the application decreases to a level at which the performance rendered by Core**2** is no longer optimal, efficient, desirable, and/or possible, the core switching module **414** may switch cores. The core switching module **414** may activate Core**1**, handover the state of Core**2** to Core**1**, and shut down Core**2** or otherwise render Core**2** inactive. Specifically, the core switching module **414** may deactivate Core**2** and copy the state of Core**2**. Then the core switching module **414** may power up Core**1**. On powering up, when Core**1** initializes, the core switching module **414** may handover the state of Core**2** to Core**1**. That is, the core switching module **414** may reset Core**1** with the state of Core**2**. Core**1** may resume executing the application where Core**2** entered the inactive state using the state of Core**2**. The PMS module **402** may enable interrupts. Thereafter, the core switching module **414** may shut down Core**2**. The scheduling module **424** may schedule threads that were to be executed by Core**2** for execution by Core**1**.

[0306] Referring now to FIG. **9**C, an exemplary core switching module **414** may comprise a mode switching module **414-1**, a core activation module **414-2**, and a state transfer module **414-3**. The mode switching module **414-1** receives control signals when operation is to be switched from the LP mode to the HP mode or from the HP mode to the LP mode. The core activation module **414-2** stops processing of the application being executed by the presently active core (e.g., Core**1**) after interrupts to the presently active core are disabled. The core activation module **414-2** activates the presently inactive core (e.g., Core**2**) and monitors whether the presently inactive core powers up. After the newly activated core (e.g., Core**2**) powers up, the state transfer module **414-3** transfers the state of the presently active core to the newly activated core. The newly activated core resumes execution of the instructions of the applications, and the core activation module **414-2** enables interrupts to newly activated core. The core activation module **414-2** shuts down the Core**1**.

[0307] Thus, the core switching module **414** may dynamically switch the cores **420** and decrease the power consumption and increase the performance of the mobile device. Additionally, since the core switching module **414** hands over the state of one core to another securely and in isolation when the cores **420** are switched, switching of the cores **420** is transparent to the OS and the applications running on the cores **420**. Accordingly, the cores **420** are plug compatible with the existing processing hardware and can replace the existing processing hardware without any hardware modifications.

[0308] Referring now to FIG. **10**, a method **500** for switching cores **420** using the core switching module **414** is shown. Control begins at step **502**. Control determines in step **504** whether the core profile module **412** generated an event to switch cores **420** (e.g., from an active core, Core**1**, to an inactive core, Core**2**). If the result of step **504** is false, control waits until the core profile module **412** generates the event to switch cores **420**. If the result of step **504** is true, the power control module **404** determines in step **506** whether the cores **420** may be switched based on current and/or anticipated resource utilization. If the result of step **506** is false, control disregards the event and returns to step **504**. If the result of step **506** is true, control proceeds to step **508**.

[0309] Control disables interrupts in step **508**. Core**1** completes any pending read/write (R/W) commands being executed by Core**1** in step **510**. Control generates a system management interrupt (SMI) call to the core switching module **414** in step **512** to switch cores **420** (e.g., deactivate the active core, Core**1**, and activate the inactive core, Core**2**).

[0310] Control saves the state of the active core, Core**1**, in step **514**. Control flushes L1 cache of Core**1** in step **516** for coherency. Control sends the event to the inactive core, Core**2**, in step **518**. Control determines in step **520** whether Core**2** has acknowledged the event by powering up and by transitioning to the active state. If the result of step **520** is true, control turns off or otherwise reduces power to Core**1** in step **521**. Control loads the saved state of Core**1** into Core**2** in step **522**. Core**2** resumes execution of applications in step **524** where Core**1** left off. Control enables interrupts in step **526**. Control returns to step **504**.

[0311] If, however, the result of step **520** is false (i.e., if Core**2** does not acknowledge the event and does not power up), control reloads the state of Core**1** into Core**1** in step **528**. Core**1** resumes execution of applications in step **530**. Control enables interrupts in step **532**. Control returns to step **504**.

[0312] FIGS. **11**A-**11**E, various exemplary implementations incorporating the teachings of the present disclosure are shown. In FIG. **11**A, the teachings of the disclosure can be implemented in a multi-core control module of a cellular phone **858**. The cellular phone **858** includes a cell phone control module **860**, a power supply **862**, memory **864**, a storage device **866**, and a cellular network interface **867**, which may include an antenna. The cellular phone **858** may include a network interface **868**, a microphone **870**, an audio output **872** such as a speaker and/or output jack, a display **874**, and a user input device **876** such as a keypad and/or pointing device. If the network interface **868** includes a wireless local area network interface, an antenna **869** may be included.

[0313] The cell phone control module **860** may implement the multi-core control module according to the teachings of the present disclosure. The cell phone control module **860** may receive input signals from the cellular network interface **867**, the network interface **868**, the microphone **870**, and/or the user input device **876**. The cell phone control module **860** may process signals, including encoding, decoding, filtering, and/or formatting, and generate output signals. The output signals may be communicated to one or more of memory **864**, the storage device **866**, the cellular network interface **867**, the network interface **868**, and the audio output **872**.

[0314] Memory **864** may include random access memory (RAM) and/or nonvolatile memory. Nonvolatile memory may include any suitable type of semiconductor or solid-state memory, such as flash memory (including NAND and NOR flash memory), phase change memory, magnetic RAM, and multi-state memory, in which each memory cell has more than two states. The storage device **866** may include an optical storage drive, such as a DVD drive, and/or a hard disk drive (HDD). The power supply **862** provides power to the components of the cellular phone **858**.

[0315] In FIG. **11**B, the teachings of the disclosure can be implemented in a multi-core control module of a wireless handset **958**. The wireless handset **958** includes a phone control module **960**, a power supply **962**, memory **964**, a storage device **966**, and a base station interface **967**, which may include an antenna (not shown). The wireless handset **958** may include a microphone **970**, an audio output **972** such as a speaker and/or output jack, a display **974**, and a user input device **976** such as a keypad and/or pointing device.

[0316] The handset control module **960** may implement the multi-core control module according to the teachings of the present disclosure. The handset control module **960** may receive input signals from the base station interface **967**, the network interface **968**, the microphone **970**, and/or the user input device **976**. The handset control module **960** may process signals, including encoding, decoding, filtering, and/or formatting, and generate output signals. The output signals may be communicated to one or more of memory **964**, the storage device **966**, the base station interface **967** and the audio output **972**.

[0317] Memory **964** may include random access memory (RAM) and/or nonvolatile memory. Nonvolatile memory may include any suitable type of semiconductor or solid-state memory, such as flash memory (including NAND and NOR flash memory), phase change memory, magnetic RAM, and multi-state memory, in which each memory cell has more than two states. The storage device **966** may include an optical storage drive, such as a DVD drive, and/or a hard disk drive (HDD). The power supply **962** provides power to the components of the wireless handset **958**.

[0318] In FIG. **11**C, the teachings of the disclosure can be implemented in a multi-core control module of a mobile device **989**. The mobile device **989** may comprise a mobile device control module **990**, a power supply **991**, memory **992**, a storage device **993**, a network interface **994**, and an external interface **999**. If the network interface **994** includes a wireless local area network interface, an antenna (not shown) may be included.

[0319] The mobile device control module **990** may implement the multi-core control module according to the teachings of the present disclosure. The mobile device control module **990** may receive input signals from the network interface **994** and/or the external interface **999**. The external interface **999** may include USB, infrared, and/or Ethernet. The input signals may include compressed audio and/or video, and may be compliant with the MP3 format. Additionally, the mobile device control module **990** may receive input from a user input **996** such as a keypad, touchpad, or individual buttons. The mobile device control module **990** may process input signals, including encoding, decoding, filtering, and/or formatting, and generate output signals.

[0320] The mobile device control module **990** may output audio signals to an audio output **997** and video signals to a display **998**. The audio output **997** may include a speaker and/or an output jack. The display **998** may present a graphical user interface, which may include menus, icons, etc. The power supply **991** provides power to the components of the mobile device **989**. Memory **992** may include random access memory (RAM) and/or nonvolatile memory.

[0321] Nonvolatile memory may include any suitable type of semiconductor or solid-state memory, such as flash memory (including NAND and NOR flash memory), phase change memory, magnetic RAM, and multi-state memory, in which each memory cell has more than two states. The storage device **993** may include an optical storage drive, such as a DVD drive, and/or a hard disk drive (HDD). The mobile device may include a personal digital assistant, a media player, a laptop computer, a gaming console, or other mobile computing device.

[0322] In FIG. **11**D, the teachings of the disclosure can be implemented in a multi-core control module of a global positioning system (GPS) **1089**. The GPS **1089** may include a GPS control module **1090**, a power supply **1091**, memory **1092**, a storage device **1093**, and an external interface **1099**.

[0323] The GPS control module **1090** may implement the multi-core control module according to the teachings of the present disclosure. The GPS control module **1090** may receive input signals from the external interface **1099**. The external interface **1099** may include wireless signals, USB, infrared, and/or Ethernet. The input signals may include compressed audio and/or video, and may be compliant with the MP3 format. Additionally, the GPS control module **1090** may receive input from a user input **1096** such as a keypad, touchpad, or individual buttons. The GPS control module **1090** may process input signals, including encoding, decoding, filtering, and/or formatting, and generate output signals.

[0324] The GPS control module **1090** may output audio signals to an audio output **1097** and video signals to a display **1098**. The audio output **1097** may include a speaker and/or an output jack. The display **1098** may present a graphical user interface, which may include menus, icons, etc. The power supply **1091** provides power to the components of the mobile device **1089**. Memory **1092** may include random access memory (RAM) and/or nonvolatile memory.

[0325] Nonvolatile memory may include any suitable type of semiconductor or solid-state memory, such as flash memory (including NAND and NOR flash memory), phase change memory, magnetic RAM, and multi-state memory, in which each memory cell has more than two states. The storage device **1093** may include an optical storage drive, such as a DVD drive, and/or a hard disk drive (HDD). The mobile device may include a personal digital assistant, a media player, a laptop computer, a gaming console, or other mobile computing device.

[0326] In FIG. **11**E, the teachings of the disclosure can be implemented in a multi-core control module **1103** of a desktop computer and/or a server **1100**. The desktop computer and/or server **1100** may comprise a multi-core processing system **1102** that includes the multi-core control module **1103**. The desktop computer and/or server **1100** may further comprise an I/O core **1104**, memory **1106**, and I/O devices **1108**. The desktop computer and/or server **1100** may be powered by a power supply **1112**.

[0327] The multi-core processing system **1102**, the I/O core **1104**, and memory **1106** may communicate via a system bus **1110**. The I/O devices **1108** may include hard disk drives (HDDs), compact disc (CD) drives, digital versatile disc (DVD) drives, display, keyboard, and other I/O devices. The I/O core **1104** may comprise I/O controllers that control the I/O devices **1108**. The multi-core processing system **1102** may execute an operating system (OS) and applications stored on the HDDs, CD drives, and/or the DVD drives. The multi-core control module **1103** may provide increased power savings and increased performance when the multi-core processing system **1102** executes applications.

[0328] Those skilled in the art can now appreciate from the foregoing description that the broad teachings of the disclosure can be implemented in a variety of forms. Therefore, while this disclosure includes particular examples, the true scope of the disclosure should not be so limited since other modifications will become apparent to the skilled practitioner upon a study of the drawings, the specification, and the following claims.

What is claimed is:

1. A core switching system, comprising:

a mode switching module that receives a switch signal to switch operation between a first mode and a second mode,

wherein during said first mode, instructions associated with applications are executed by a first asymmetric core, and a second asymmetric core is inactive,

wherein during said second mode, said instructions are executed by said second asymmetric core, and said first asymmetric core is inactive;

a core activation module that stops processing of said applications by said first asymmetric core after interrupts are disabled; and

a state transfer module that transfers a state of said first asymmetric core to said second asymmetric core,

wherein said core activation module allows said second asymmetric core to resume execution of said instructions and said interrupts are enabled.

2. The core switching system of claim **1** wherein said instructions are executed without instruction translation when said second asymmetric core resumes executing said instructions during said second mode.

3. The core switching system of claim **1** wherein a first maximum speed and a first maximum operating power level of said first asymmetric core are greater than a second maximum speed and a second maximum operating power level of said second asymmetric core, respectively.

4. The core switching system of claim **1** wherein said core activation module supplies one of no power and standby power to said first asymmetric core when said second asymmetric core resumes execution of said instructions.

5. The core switching system of claim **1** further comprising a core profile module that generates an anticipated instruction execution rate for executing said applications based on at least one of a data cache miss rate, an instruction cache miss rate, and instructions per cycle executed by said first asymmetric core, and that generates said switch signal based on said anticipated instruction execution rate.

6. The core switching system of claim **1** further comprising a core change sequence (CCS) module that generates a CCS based on said switch signal, wherein said core activation module powers up one of said first and second asymmetric cores and shuts down another of said first and second asymmetric cores based on said CCS.

7. A device comprising:

memory that stores an operating system (OS) including a kernel that provides services to applications; and

a core switching module that switches operation between a first mode and a second mode, wherein during said first mode, instructions associated with said applications are executed by a first asymmetric core, and a second asymmetric core is inactive, and wherein during said second mode, said instructions are executed by said second asymmetric core, and said first asymmetric core is inactive, and

wherein said core switching module operates at a level above said kernel.

8. The device of claim **7** wherein said core switching module switches operation between said first mode and said second mode transparently to said OS.

9. The device of claim **7** wherein said core switching module comprises:

a mode switching module that receives a switch signal to switch operation between said first mode and said second mode;

a core activation module that stops processing of said applications by said first asymmetric core after interrupts are disabled; and

a state transfer module that transfers a state of said first asymmetric core to said second asymmetric core,

wherein said core activation module allows said second asymmetric core to resume execution of said instructions and enables said interrupts.

10. The device of claim **7** wherein said second asymmetric core executes said instructions without instruction translation when said second asymmetric core resumes executing said instructions during said second mode.

11. The device of claim **7** wherein a first maximum speed and a first maximum operating power level of said first asymmetric core are greater than a second maximum speed and a second maximum operating power level of said second asymmetric core, respectively.

12. The device of claim **7** wherein said core switching module supplies one of no power and standby power to said first asymmetric core when said second asymmetric core resumes execution of said instructions.

13. The core switching system of claim **7** further comprising a core profile module that generates an anticipated instruction execution rate for executing said applications based on at least one of a data cache miss rate, an instruction cache miss rate, and instructions per cycle executed by said first asymmetric core, wherein said core switching module switches operation between one of said first and second modes and another of said first and second modes based on said anticipated instruction execution rate.

14. The core switching system of claim **7** further comprising a core change sequence (CCS) module that generates a CCS based on at least one of a data cache miss rate, an instruction cache miss rate, and instructions per cycle executed by one of said first and second asymmetric cores, wherein said core switching module powers up one of said first and second asymmetric cores and shuts down another of said first and second asymmetric cores based on said CCS.

15. A method comprising:

executing instructions associated with applications using a first asymmetric core when a second asymmetric core is inactive during a first mode;

executing said instructions using said second asymmetric core when said first asymmetric core is inactive during a second mode;

receiving a switch signal to switch operation between said first mode and said second mode;

disabling interrupts during said first mode based on said switch signal;

stopping processing of said applications by said first asymmetric core after said interrupts are disabled;

transferring a state of said first asymmetric core to said second asymmetric core;

allowing said second asymmetric core to resume execution of said instructions; and

enabling said interrupts.

16. The method of claim **15** further comprising executing said instructions without instruction translation when said second asymmetric core resumes executing said instructions during said second mode.

17. The method of claim **15** further comprising:

providing said first asymmetric core having a first maximum speed and a first maximum operating power level; and

providing said second asymmetric core having a second maximum speed and a second maximum operating power level,

wherein said first maximum speed and said first maximum operating power level are greater than said second maximum speed and said second maximum operating power level, respectively.

18. The method of claim **15** further comprising supplying one of no power and standby power to said first asymmetric core when said second asymmetric core resumes execution of said instructions.

19. The method of claim **15** further comprising:

generating an anticipated instruction execution rate for executing said applications based on at least one of a data cache miss rate, an instruction cache miss rate, and instructions per cycle executed by said first asymmetric core; and

generating said switch signal based on said anticipated instruction execution rate.

20. The method of claim **15** further comprising:

generating a core change sequence (CCS) based on said switch signal;

powering up one of said first and second asymmetric cores based on said CCS; and

shutting down another of said first and second asymmetric cores based on said CCS.

21. A method comprising:

storing an operating system (OS) including a kernel that provides services to applications;

executing instructions associated with said applications using a first asymmetric core when a second asymmetric core is inactive during a first mode;

executing said instructions using said second asymmetric core when said first asymmetric core is inactive during a second mode;

switching operation between said first mode and said second mode using a core switching module; and

executing said core switching module at a level above said kernel.

22. The method of claim **21** further comprising switching operation between said first mode and said second mode transparently to said OS.

23. The method of claim **21** further comprising:

receiving a switch signal to switch operation between said first mode and said second mode;

stopping processing of said applications by said first asymmetric core after interrupts are disabled;

transferring a state of said first asymmetric core to said second asymmetric core;

allowing said second asymmetric core to resume execution of said instructions; and

enabling said interrupts.

24. The method of claim **21** further comprising executing said instructions without instruction translation when said second asymmetric core resumes executing said instructions during said second mode.

25. The method of claim **21** further comprising:

providing said first asymmetric core having a first maximum speed and a first maximum operating power level; and

providing said second asymmetric core having a second maximum speed and a second maximum operating power level,

wherein said first maximum speed and said first maximum operating power level are greater than said second maximum speed and said second maximum operating power level, respectively.

26. The method of claim **21** further comprising supplying one of no power and standby power to said first asymmetric core when said second asymmetric core resumes execution of said instructions.

27. The method of claim **21** further comprising:

generating an anticipated instruction execution rate for executing said applications based on at least one of a data cache miss rate, an instruction cache miss rate, and instructions per cycle executed by said first asymmetric core; and

switching operation between one of said first and second modes and another of said first and second modes based on said anticipated instruction execution rate.

28. The method of claim **21** further comprising:

generating a core change sequence (CCS) based on at least one of a data cache miss rate, an instruction cache miss rate, and instructions per cycle executed by said first asymmetric core;

powering up one of said first and second asymmetric cores based on said CCS; and

shutting down another of said first and second asymmetric cores based on said CCS.

29. A core switching system, comprising:

mode switching means for switching operating modes, wherein said mode switching means receives a switch signal to switch between a first mode and a second mode,

wherein during said first mode, instructions associated with applications are executed by first asymmetric core means for executing said instructions, and second asymmetric core means for executing said instructions is inactive,

wherein during said second mode, said instructions are executed by said second asymmetric core means, and said first asymmetric core means is inactive;

core activation means for activating said first and second asymmetric core means, wherein said core activation means stops processing of said applications by said first asymmetric core means after interrupts are disabled; and

state transfer means for transferring a state of said first asymmetric core means to said second asymmetric core means,

wherein said core activation means allows said second asymmetric core means to resume execution of said instructions and said interrupts are enabled.

30. The core switching system of claim **29** wherein said second asymmetric core means executes said instructions without instruction translation when said second asymmetric core means resumes executing said instructions during said second mode.

31. The core switching system of claim **29** wherein a first maximum speed and a first maximum operating power level of said first asymmetric core means are greater than a second maximum speed and a second maximum operating power level of said second asymmetric core means, respectively.

32. The core switching system of claim **29** wherein said core activation means supplies one of no power and standby power to said first asymmetric core means when said second asymmetric core means resumes execution of said instructions.

33. The core switching system of claim **29** further comprising core profile means for generating an anticipated instruction execution rate for executing said applications based on at least one of a data cache miss rate, an instruction cache miss rate, and instructions per cycle executed by said first asymmetric core means, and for generating said switch signal based on said anticipated instruction execution rate.

34. The core switching system of claim **29** further comprising core change sequence (CCS) means for generating a CCS based on said switch signal, wherein said core activation means powers up one of said first and second asymmetric core means and shuts down another of said first and second asymmetric cores based on said CCS.

35. A device comprising:

memory that stores an operating system (OS) including a kernel that provides services to applications; and

core switching means for switching operation between a first mode and a second mode, wherein during said first mode, instructions associated with said applications are executed by first asymmetric core means for executing said applications, and second asymmetric core means for executing said applications is inactive, and wherein during said second mode, said instructions are executed by said second asymmetric core means, and said first asymmetric core means is inactive, and

wherein said core switching means operates at a level above said kernel.

36. The device of claim **35** wherein said core switching means switches between said first mode and said second mode transparently to said OS.

37. The device of claim **35** wherein said core switching means comprises:

mode switching means for receiving a switch signal to switch operation between said first mode and said second mode;

core activation means for stopping processing of said applications by said first asymmetric core means after interrupts are disabled; and

state transfer means for transferring a state of said first asymmetric core means to said second asymmetric core means,

wherein said core activation means allows said second asymmetric core means to resume execution of said instructions and enables said interrupts.

38. The device of claim **35** wherein said instructions are executed without instruction translation when said second asymmetric core means resumes executing said instructions.

39. The device of claim **35** wherein a first maximum speed and a first maximum operating power level of said first asymmetric core means are greater than a second maximum speed and a second maximum operating power level of said second asymmetric core means, respectively.

40. The device of claim **35** wherein said core switching means supplies one of no power and standby power to said first asymmetric core means when said second asymmetric core means resumes execution of said instructions.

41. The device of claim **35** further comprising core profile means for generating an anticipated instruction execution rate for executing said applications based on at least one of a data cache miss rate, an instruction cache miss rate, and instructions per cycle executed by said first asymmetric core means, wherein said core switching means switches between one of said first and second modes and another of said first and second modes based on said anticipated instruction execution rate.

42. The device of claim **35** further comprising core change sequence (CCS) means for generating a CCS based on at least one of a data cache miss rate, an instruction cache miss rate, and instructions per cycle executed by said first asymmetric core means, wherein said core switching means powers up one of said first and second asymmetric core means and shuts down another of said first and second asymmetric core means based on said CCS.

43. A computer program stored on a computer readable medium and executed by a processor, comprising:

executing instructions associated with applications using a first asymmetric core when a second asymmetric core is inactive during a first mode;

executing said instructions using said second asymmetric core when said first asymmetric core is inactive during a second mode;

receiving a switch signal to switch operation between said first mode and said second mode;

disabling interrupts during said first mode based on said switch signal;

stopping processing of said applications by said first asymmetric core after said interrupts are disabled;

transferring a state of said first asymmetric core to said second asymmetric core;

allowing said second asymmetric core to resume execution of said instructions; and

enabling said interrupts.

44. The computer program of claim **43** further comprising executing said instructions without instruction translation when said second asymmetric core resumes executing said instructions during said second mode.

45. The computer program of claim **43** further comprising:

providing said first asymmetric core having a first maximum speed and a first maximum operating power level; and

providing said second asymmetric core having a second maximum speed and a second maximum operating power level,

wherein said first maximum speed and said first maximum operating power level are greater than said second maximum speed and said second maximum operating power level, respectively.

46. The computer program of claim **43** further comprising supplying one of no power and standby power to said first asymmetric core when said second asymmetric core resumes execution of said instructions.

47. The computer program of claim **43** further comprising:

generating an anticipated instruction execution rate for executing said applications based on at least one of a data cache miss rate, an instruction cache miss rate, and instructions per cycle executed by said first asymmetric core; and

generating said switch signal based on said anticipated instruction execution rate.

48. The computer program of claim **43** further comprising:

generating a core change sequence (CCS) based on said switch signal;

powering up one of said first and second asymmetric cores based on said CCS; and

shutting down another of said first and second asymmetric cores based on said CCS.

49. A computer program stored on a computer readable medium and executed by a processor, comprising:

storing an operating system (OS) including a kernel that provides services to applications;

executing instructions associated with said applications using a first asymmetric core when a second asymmetric core is inactive during a first mode;

executing said instructions using said second asymmetric core when said first asymmetric core is inactive during a second mode;

switching operation between said first mode and said second mode using a core switching module; and

executing said core switching module at a level above said kernel.

50. The computer program of claim **49** further comprising switching operation between said first mode and said second mode transparently to said OS.

51. The computer program of claim **49** further comprising:

receiving a switch signal to switch operation between said first mode and said second mode;

stopping processing of said applications by said first asymmetric core after interrupts to said first asymmetric core are disabled;

transferring a state of said first asymmetric core to said second asymmetric core;

allowing said second asymmetric core to resume execution of said instructions; and

enabling said interrupts.

52. The computer program of claim **49** further comprising executing said instructions without instruction translation when said second asymmetric core resumes executing said instructions during said second mode.

53. The computer program of claim **49** further comprising:

providing said first asymmetric core having a first maximum speed and a first maximum operating power level; and

providing said second asymmetric core having a second maximum speed and a second maximum operating power level,

wherein said first maximum speed and said first maximum operating power level are greater than said second maximum speed and said second maximum operating power level, respectively.

54. The computer program of claim **49** further comprising supplying one of no power and standby power to said first asymmetric core when said second asymmetric core resumes execution of said instructions.

55. The computer program of claim **49** further comprising:

generating an anticipated instruction execution rate for executing said applications based on at least one of a data cache miss rate, an instruction cache miss rate, and instructions per cycle executed by said first asymmetric core; and

switching operation between one of said first and second modes and another of said first and second modes based on said anticipated instruction execution rate.

56. The computer program of claim **49** further comprising:

generating a core change sequence (CCS) based on at least one of a data cache miss rate, an instruction cache miss rate, and instructions per cycle executed by said first asymmetric core;

powering up one of said first and second asymmetric cores based on said CCS; and

shutting down another of said first and second asymmetric cores based on said CCS.

* * * * *