IN THE UNITED STATES PATENT AND TRADEMARK OFFICE

In re Patent of:	Ignon et al.	
U.S. Patent No.:	11,865,287	Attorney Docket No.: 58484-0001IP1
Issue Date:	January 9, 2024	
Appl. Serial No.:	18/094,884	
Filing Date:	January 9, 2023	
Title:	DEVICES AND METHODS FOR TREATING SKIN	

Mail Stop Patent Board
Patent Trial and Appeal Board
U.S. Patent and Trademark Office
P.O. Box 1450
Alexandria, VA 22313-1450

DECLARATION OF ERIC SIMON IN SUPPORT OF PETITION FOR INTER PARTES REVIEW OF U.S. PATENT NO. 11,865,287

TABLE OF CONTENTS

I. ASSIGNMENT 5
II. QUALIFICATIONS 5
III. SUMMARY OF CONCLUSIONS FORMED 9
IV. BACKGROUND KNOWLEDGE PRIOR TO THE PRIORITY DATE OF THE '287 PATENT 10
V. LEGAL PRINCIPLES 10
A. Claim construction 11
B. Priority 11
C. Anticipation 12
D. Obviousness 12
VI. MATERIALS CONSIDERED 14
VII. TECHNOLOGY OVERVIEW 16
A. Microdermabrasion 16
VIII. OVERVIEW OF THE '287 PATENT 22
IX. OVERVIEW OF THE PROSECUTION HISTORY 26
X. SUMMARY OF THE PRIOR ART 27
1. Karasiuk Overview 27
2. Palmer Overview 32
3. Trueba Overview 35
4. Greenberg Overview 38
XI. [GROUND 1A] – Karasiuk And Palmer 43
1. The Karasiuk-Palmer Combination 43
2. Claim 1 61
3. Claim 2 97
4. Claim 3 99
5. Claim 8 101
6. Claim 9 106
7. Claim 10 109
8. Claim 11 113
9. Claim 12 127
10. Claim 14 129
11. Claim 15 129
12. Claim 16 131
13. Claim 22 131

14. Claim 23 150
15. Claim 26 152
16. Claim 28 156
17. Claim 29 157
18. Claim 34 157
19. Claim 35 158
20. Claim 36 158
21. Claim 37 159
22. Claim 39 162
23. Claim 40 163
24. Claim 45 163

XII. [GROUND 1B] – Karasiuk, Palmer, And Trueba....164
1. The Karasiuk-Palmer-Trueba Combination....164
2. Claim 1 and its Dependent Claims....171
3. Claims 12, 22, 23, 29, 40 and their Dependent Claims....174
4. Claims 3, 26 and their Dependent Claims....175
5. Claim 4 175
6. Claim 5 176
7. Claim 6 176
8. Claim 7 177
9. Claim 17 177
10. Claim 18 177
11. Claim 19 178
12. Claim 20 178
13. Claim 24 178
14. Claim 25 179
15. Claim 30 179
16. Claim 31 179
17. Claim 32 179
18. Claim 33 180
19. Claim 41 180
20. Claim 42 180
21. Claim 43 180
22. Claim 44 181

XIII. [GROUND 2A] – Greenberg....181
1. Claim 1 181
2. Claim 2 210
3. Claim 3 212
4. Claim 8 214

5. Claim 9 216
6. Claim 10 218
7. Claim 11 222
8. Claim 12 236
9. Claim 14 237
10. Claim 15 237
11. Claim 16 238
12. Claim 22 239
13. Claim 23 250
14. Claim 26 253
15. Claim 28 256
16. Claim 29 256
17. Claim 34 257
18. Claim 35 257
19. Claim 36 257
20. Claim 37 258
21. Claim 39 260
22. Claim 40 261
23. Claim 45 261

XIV. [GROUND 2B] – Greenberg And Trueba....262
1. The Greenberg-Trueba Combination 262
1. Claim 1 and its Dependent Claims....267
2. Claims 12, 22, 23, 29, 40 and their Dependent Claims....271
3. Claims 3, 26 and their Dependent Claims....271
4. Claim 4 272
5. Claim 5 272
6. Claim 6 273
7. Claim 7 273
8. Claim 17 274
9. Claim 18 274
10. Claim 19 274
11. Claim 20 274
12. Claim 24 275
13. Claim 25 275
14. Claim 30 275
15. Claim 31 275
16. Claim 32 276
17. Claim 33 276
18. Claim 41 276

19. Claim 42 277
20. Claim 43 277
21. Claim 44 277

XV. CONCLUSION.....277

I, Eric Simon, of Salt Lake City, Utah, declare that:

I. ASSIGNMENT

1. I have been retained on behalf of Eunsung Global Corp ("Eunsung") to offer technical opinions related to U.S. Patent No. 11,865,287 ("The '287 patent") (EUNSUNG-1001). I understand that Eunsung is requesting that the Patent Trial and Appeal Board ("PTAB" or "Board") to institute an *inter partes* review ("IPR") proceeding of the '287 patent.

2. I have been asked to provide my independent analysis of the '287 patent in light of the prior art publications cited in this declaration.

3. I am not and never have been, an employee of Eunsung. I received no compensation for this declaration beyond my normal hourly compensation based on my time actually spent analyzing the '287 patent, the prior art publications cited below, and issues related thereto, and I will not receive any added compensation based on the outcome of any IPR or other proceeding involving the '287 patent.

II. QUALIFICATIONS

4. A detailed description of my professional qualifications, including a list of publications, patents, awards, and professional activities, is contained in my curriculum vitae, a copy of which is attached as **Appendix A**.

5. I received a Master of Engineering (M.Eng.) in Bioengineering and a Bachelor of Science (B.S.) in Materials Science and Engineering, both degrees

from the University of Utah. My focus during my master's degree was on device design, mechanical engineering, and manufacturing processes; my focus during my bachelor's degree was on biomaterials and materials processing. In addition to various traditional engineering disciplines, my studies included physics, chemistry, ergonomics, optics, and applied biomaterials, I also had extensive coursework in the biological sciences including neurobiology, cell biology, and medical-school level anatomy and physiology,

6. I have been designing biomedical products since 1981. I am the President, Principal Design Engineer, and Founder of Dexterity Design, a product design, development, and engineering firm specializing in the design and development of biomedical and biotechnical products, including dermatology and cosmetology devices. The product scope of Dexterity Design is primarily biomedical and biotechnical devices and instrumentation, both for therapeutics and diagnostics. I have also designed and developed consumer, industrial, and recreational products.

7. I have experience designing and implementing a wide range of medical therapeutic and diagnostic devices including those used in orthopedics, dermatology, cosmetology, ophthalmology, and cardiovascular medicine. These encompass implantables, procedural tools, and extra-corporeals, both durable and disposable. I also have experience in designing biotechnical instruments used in

proteomics, genomics, and other areas of molecular analysis, as well as cell culture systems. I am often called upon to develop mechanical components and enclosures for these products and am very familiar with the design and the materials, prototyping, and manufacturing thereof. I have expertise in fluidics and microfluidics, both liquid and gaseous, utilized in these products. Furthermore, I work closely with electronic designers/engineers and programmers and have solid working knowledge of the use of microcontrollers and other circuitry for device control, and the programming requirements they encumber.

8. My experience with the development of cosmetology/dermatology devices includes the design, prototyping, testing, and manufacturing of various products for dermal and subdermal conditions. These conditions include various disease-based skin disorders, as well as dermal rejuvenation for aging and sun damage. I have also designed and developed products to reduce tissue pain and damage to near-surface structures such as tendons, ligaments, and muscles such as ultrasonic and photonic therapeutic devices.

9. Pertaining to the case herein, I have designed and developed microdermabrasion devices which utilize abrasive particles fluidized into an air stream which is directed onto the skin of the patient/customer for purposes of removing epidermal cells. Typically, these devices are used for cosmetology to induce skin regeneration within the dermis and lower epidermis which in turn

gives the recipient the appearance of more youthful skin. In some cases, the device may be powerful enough to abrade deeper into the skin tissue, making it useful for remediating scars and tattoo removal. The devices I designed all used vacuum (negative pressure) to draw the abrasive grit from a supply vessel, fluidize the grit in a separate chamber, carburate it into an air stream, and deliver it into a handpiece where it is then directed onto the skin. Concurrently, impacted abrasive grit, debrided skin cells, and body fluids are withdrawn from the site of impact and then returned to the device and deposited into a waste containment vessel for later disposal. During the course of this development, I was required to read and understand numerous prior art patents relating to dermabrasion, microdermabrasion, and other forms of fluidized-stream surface abrasion (e.g., those sued for industrial sand-blasting and bead-blasting). I also studied various microdermabrasion apparatuses offered from competitive manufacturers. A product based on this design and development efforts was offered for sale and generated good sales and user reviews for many years; I was listed as an inventor on two utility patents and two design patents relating to this product.

10. To date, I am a listed inventor on 22 U.S. patents, issued and pending. As mentioned, several of these include microdermabrasion apparatuses, and others relating to dermal and subdermal therapeutics.

11. Please see my CV, attached hereto as **Appendix A**, for further

information.

III. SUMMARY OF CONCLUSIONS FORMED

12. This Declaration explains the conclusions that I have formed based on my analysis. To summarize those conclusions:

- **Ground 1A:** Based upon my knowledge and experience and my review of the prior art publications in this declaration, I believe that claims 1-3, 8-12, 14-16, 22-23, 26, 28-29, 34-37, 39-40, and 45 of the ’287 patent are rendered obvious by Karasiuk and Palmer.
- **Ground 1B**: Based upon my knowledge and experience and my review of the prior art publications in this declaration, I believe that claims 1-10, 12, 17-20, 22-26, 28-36, and 40-44 of the ’287 patent are rendered obvious by Karasiuk, Palmer, and Trueba.
- **Ground 2A:** Based upon my knowledge and experience and my review of the prior art publications in this declaration, I believe that claims 1-3, 8-12, 14-16, 22-23, 26, 28-29, 34-37, 39-40, and 45 of the ’287 patent are rendered obvious by Greenberg.
- **Ground 2B:** Based upon my knowledge and experience and my review of the prior art publications in this declaration, I believe that claims 1-10, 12, 17-20, 22-26, 28-36, and 40-44 of the ’287 patent are rendered obvious by Greenberg and Trueba.

IV. BACKGROUND KNOWLEDGE PRIOR TO THE PRIORITY DATE OF THE ’287 PATENT

13. I have been informed that a person of ordinary skill in the art is a hypothetical person who is presumed to have the skill and experience of an ordinary worker in the field at the time of the alleged invention. Based on my knowledge and experience in the field and my review of the ’287 patent and file history, I believe that a person having ordinary skill in the art (POSITA) at the time of the alleged invention would have had an undergraduate degree (B.S.) in Mechanical Engineering or equivalent knowledge, training, or experience, with two years of work experience in the design of mechanical products, design of fluidic systems, and/or the design of devices intended for medical or cosmetological applications. Additional education or industry experience may compensate for a deficit in one of the other aspects of the requirements stated above

14. My analysis and conclusions set forth in this declaration are based on the perspective of a person of ordinary skill in the art having this level of knowledge and skill as of the date of the alleged invention of the ’287 patent. Based on instruction from Counsel, I have applied **December 30, 2005 (“Critical Date”)**, as the date of the alleged invention of the ’287 patent.

V. LEGAL PRINCIPLES

15. I am not a lawyer and I will not provide any legal opinions in this IPR.

Although I am not a lawyer, I have been advised that certain legal standards are to be applied by technical experts in forming opinions regarding the meaning and validity of patent claims.

A. Claim construction

16. I understand that claim terms are generally given their plain and ordinary meaning in light of the patent's specification and file history as understood by a POSITA at the time of the purported invention. In that regard, I understand that the best indicator of claim meaning is its usage in the context of the patent specification as understood by a POSITA. I further understand that the words of the claims should be given their plain meaning unless that meaning is inconsistent with the patent specification or the patent's history of examination before the Patent Office. I also understand that the words of the claims should be interpreted as they would have been interpreted by a POSITA at the time of the invention was made (not today).

B. Priority

17. I understand that a continuation application is a later-filed application that has the same disclosure (specification and figures) as an earlier-filed application to which the later-filed application claims priority. A continuation is generally entitled to the same priority date as the earlier-filed application to which it claims priority.

C. Anticipation

18. I understand that a patent claim is invalid as anticipated if each and every element as set forth in the claim is found, either expressly or inherently described, in a single prior art reference. I also understand that, to anticipate, the reference must teach all of the limitations arranged or combined in the same way as recited in the claim.

19. With respect to inherency, I understand that the fact that a certain result or characteristic may occur or be present in the prior art is not sufficient to establish the inherency of that result or characteristic. Instead, the inherent characteristic must necessarily flow from the teaching of the prior art.

D. Obviousness

20. I understand that a patent claim is invalid if the claimed invention would have been obvious to a person of ordinary skill in the field at the time of the purported invention, which is often considered the time the application was filed. Thus, even if all of the claim limitations are not found in a single prior art reference that anticipates the claim, the claim can still be invalid.

21. To obtain a patent, a claimed invention must have, as of the priority date, been nonobvious in view of the prior art in the field. I understand that an invention is obvious when the differences between the subject matter sought to be patented and the prior art are such that the subject matter as a whole would have

been obvious at the time the invention was made to a person having ordinary skill in the art.

22. I understand that, to prove that prior art or a combination of prior art renders a patent obvious it is necessary to: (1) identify the particular references that, singly or in combination, make the patent obvious; (2) specifically identify which elements of the patent claim appear in each of the asserted references; and (3) explain a motivation, teaching, need, market pressure or other legitimate reason that would have inspired a person of ordinary skill in the art to combine prior art references to solve a problem.

23. I also understand that certain objective indicia can be important evidence regarding whether a patent is obvious or nonobvious. Such indicia include:

- Commercial success of products covered by the patent claims;
- A long-felt need for the invention;
- Failed attempts by others to make the invention;
- Copying of the invention by others in the field;
- Unexpected results achieved by the invention as compared to the closest prior art;
- Praise of the invention by the infringer or others in the field;
- The taking of licenses under the patent by others;

- Expressions of surprise by experts and those skilled in the art at the making of the invention; and
- The patentee proceeded contrary to the accepted wisdom of the prior art.

24. To the extent these factors have been brought to my attention, if at all, I have taken them into consideration in rendering my opinions and conclusions.

VI. MATERIALS CONSIDERED

25. Based on my above-described experience, I believe that I am considered to be an expert in the field. Also, based on my experiences, I understand and know of the capabilities of persons of ordinary skill in the field during the early 1990s–2010s, and I have worked closely with persons in the field during that time frame.

26. As part of my independent analysis for this declaration, I have considered the following: the background knowledge/technologies that were commonly known to persons of ordinary skill in this art during the time before the Critical Date; my own knowledge and experiences gained from my work experience in the field of the ’287 patent and related disciplines; and my experience in working with others involved in this field and related disciplines.

27. In addition, I have analyzed the following publications and materials:

- EUNSUNG-1001 U.S. Pat. No. 11,865,287 to Ignon (“the ’287 patent”)

- EUNSUNG-1002 Excerpts from the Prosecution History of the ’287 patent (“the Prosecution History”)
- EUNSUNG-1004 U.S. Patent Publication No. 2003/0212415 (“Karasiuk”)
- EUNSUNG-1005 U.S. Patent No. 5,199,604 (“Palmer”)
- EUNSUNG-1006 U.S. Patent Publication No. 2003/0093089 (“Greenberg”)
- EUNSUNG-1007 U.S. Patent No. 6,390,815 (“Pond”)
- EUNSUNG-1008 U.S. Patent No. 6,684,880 (“Trueba”)
- EUNSUNG-1009 U.S. Patent No. 4,512,764 (“Wunsch 1982”)
- EUNSUNG-1010 U.S. Patent Publication No. 2003/0018252 (“Duchon”)
- EUNSUNG-1011 U.S. Patent No. 4,215,476 (“Armstrong”)
- EUNSUNG-1012 Friedman, et al., Chemical peels, dermabrasion, and laser therapy, Disease-a-Month 55.4 (2009): 223-235 (“Friedman”)
- EUNSUNG-1013 Burgess, Cheryl M., Cosmetic dermatology, Heidelberg, Germany: Springer, 2005 (“Burgess”)
- EUNSUNG-1014 Pickering, J. A., Touch-sensitive screens: the technologies and their application, International Journal of Man-Machine Studies 25.3 (1986): 249-269 (“Pickering”)
- EUNSUNG-1015 Friedman, Mark J. et al., The AMSA injection: A new concept for local anesthesia of maxillary teeth using a computer-controlled injection system. Quintessence Int 29 (1998): 297-3 (“Friedman 1998”)

- EUNSUNG-1016 Lee, Woan-Ruoh, et al., Lasers and microdermabrasion enhance and control topical delivery of vitamin C, Journal of investigative dermatology 121.5 (2003): 1118-1125 ("Lee")
- EUNSUNG-1017 U.S. Patent No. 9,550,052 ("the '052 patent")
- EUNSUNG-1018 U.S. Patent No. 11,446,477 ("the '477 patent")
- EUNSUNG-1019 U.S. Patent No. 6,428,518 ("Brengle")
- EUNSUNG-1020 U.S. Patent No. 4,559,036 ("Wunsch")
- EUNSUNG-1021 U.S. Patent No. 6,099,511 ("Devos")
- EUNSUNG-1022 U.S. Patent No. 5,163,902 ("Lynn")
- EUNSUNG-1023 U.S. Patent No. 5,190,525 ("Oswald")
- EUNSUNG-1024 U.S. Patent No. 6,673,082 ("Mallett")
- EUNSUNG-1025 Rajan, Poonam, et al., Skin barrier changes induced by aluminum oxide and sodium chloride microdermabrasion, Dermatologic surgery 28.5 (2002): 390-393 ("Rajan")
- EUNSUNG-1026 Karimipour, Darius J., et al., Molecular analysis of aggressive microdermabrasion in photoaged skin, Archives of dermatology 145.10 (2009): 1114-1122 ("Karimipour")
- EUNSUNG-1027 U.S. Patent No. 6,241,739 ("Waldron")

VII. TECHNOLOGY OVERVIEW

A. Microdermabrasion

28. Dermabrasion mechanically removes the upper layer of skin to treat various skin conditions including wrinkles, acne scars, uneven skin surfaces, and pigmentary disorders of photoaging. EUNSUNG-1012, 6; EUNSUNG-1013, 57. Microdermabrasion, a variation of dermabrasion, typically relies on two basic functions: "(1) superficially abrading the skin with fine, sharp particles or "crystals" (aluminum oxide, salt, or sodium bicarbonate) suspended in an airstream and actuated via positive- or negative-flowing pressure, and (2) a vacuum closed-loop suction device to remove the crystals, along with dead skin, oil, and surface debris." EUNSUNG-1013, 84. "The intensity of the treatment, as determined by the number of passes and level of suction, is chosen based on the condition being treated." EUNSUNG-1013, 86. After treatment, the skin can be rinsed with tepid water and a moisturizer with adequate sunscreen applied. EUNSUNG-1013, 86.

29. As an alternative to laser resurfacing, chemical peels, and dermabrasion, microdermabrasion is indicated for similar skin issues but with the limitation of having relatively superficial results. EUNSUNG-1013, 85. Microdermabrasion, described as a "skin polishing," is used for atrophic acne scars, mild facial rhytids, clogged pores, traumatic scars, enlarged pores, brown spots, stretch marks, melasma, keratosis pilaris, and to improve skin texture. *Id*. Microdermabrasion has also been used to prime the skin for superficial chemical peels by stripping the stratum corneum to ensure more even absorption. *Id*. When

used in conjunction with microdermabrasion, traditional superficial chemical peeling agents. *Id*.

30. Prior to treatment, the area is cleansed and allowed to dry completely. EUNSUNG-1013, 85. Vacuum level and crystal pressure may be determined by testing an area of nonfacial skin, but patient tolerance can also dictate an adjustment in the power setting. EUNSUNG-1013, 85-86. The first pass is performed by allowing gentle suction of the skin into the hand piece as it is made to glide along the skin surface. EUNSUNG-1013, 86. The surface area being treated is stretched taut by the clinician's free hand to avoid excessive suction in any one area, which can cause an abrasion or pinpoint bleeding. *Id*. A second pass is made at a right angle to the first, and if more passes are required, they should continue to follow this alternating pattern to avoid streaking. *Id*. Reducing the level of suction and or number of passes may be necessary around the eyes and other delicate areas of the face. *Id*. The intensity of the treatment, as determined by the number of passes and level of suction, is chosen based on the condition being treated. *Id*.

31. When the treatment is completed, the residual crystals should be gently brushed off the skin in the direction away from the eyes so as to prevent eye irritation. EUNSUNG-1013, 86. The skin can then be rinsed with tepid water and a moisturizer with adequate sunscreen applied. *Id*. Patients are instructed to avoid

keratolytic agents, including retinoids, alpha-hydroxy acids, and benzoyl peroxides 3 days before and 3 days following the treatment. *Id*. They are asked to avoid waxing, electrolysis, and laser hair removal 1 week before treatment, and excessive sun exposure 2 weeks before treatment. *Id*. All patients are given prophylaxis for HSV 1 day before and 2 days following the treatment using standard oral antiviral therapy. *Id*.

32. The particle size of the aluminum oxide crystals used for microdermabrasion are significantly larger than those for dental use (100–120 μm versus 24–50 μm), and the smaller particles used for dental air abrasion have not been found to pose a significant health hazard. EUNSUNG-1013, 86.

33. Particle-based microdermabrasion was first developed in Italy in 1985 and first gained FDA approval in 1996. EUNSUNG-1025, 1. Being about 40 years old, the science and technology of dermabrasion has evolved into various forms intended to maximize positive treatment outcomes for the patient/customer, simplify use of the apparatus for the user (physician/technician/cosmetologist), and provide other benefits such as reduced cost of consumables and reduced time of treatment, and reduced amount of stray particles which may be irritating to both the user and the customer.

34. Traditionally, a "crystal" microdermabrasion system includes a pump, a connecting tube, a hand piece, and a vacuum. While the pump creates a high-

pressure stream of inert crystals (aluminum oxide, magnesium oxide, sodium chloride, or sodium bicarbonate) to abrade the skin, the vacuum removes the crystals and exfoliated skin cells.

35. A simplified embodiment of the traditional microdermabrasion systems precludes use of a positive pressure pump to actuate the crystals, instead using only a vacuum source to "draw" the crystals from a reservoir, fluidize them into an airstream, and direct them onto the skin through the use of an applicator or handpiece. Once the crystals have impacted the skin, they are immediately drawn into a return line (through the same vacuum source as they were actuated onto the skin) and deposited into a waste receptable positioned upstream from the vacuum source. The advantage of this vacuum-based system is that a positive pressure pump is not needed, thereby reducing cost and complexity, as well as obviating the need to balance flows between the particle feed line and the particle/waste removal line. Additionally, a tip having an orifice is positioned on the skin-contact end of the handpiece and the flow of particles only occurs when the orifice is occluded by the skin, thereby closing the vacuum circuit and inducing airflow (with particles) through the system. In this manner, the particles only flow when the handpiece tip is placed on the skin treatment area and flow stops when the tip is removed (and the path is opened), thus creating an automatic flow/no-flow switch functionality. The device embodied in Karasiuk is this type of vacuum-based apparatus. Note

that the tip may be a separate component (to facilitate disposability, cleaning, and manufacturability) or may be integral to the working end of the handpiece.

36. In another embodiment, the inert crystals can alternately be replaced by a roughened surface of the tip in the diamond microdermabrasion system. EUNSUNG-1026, 1. This type of surface-based system was introduced in the early 2000's. EUNSUNG-1027, Abstract, claim 1.

37. Microdermabrasion typically utilizes a gas, usually air, to entrain or fluidize the abrasive particles into an airstream and deliver those particles at a controlled concentration and velocity to the skin. However, the use of condensed fluids (i.e., liquids) such as water, saline, and other aqueous liquids, as well as non-aqueous liquids, may be employed. Likewise, semi-liquid condensed fluids, such as gels or slurries, may also be employed. The abrasive particles may be contained within the fluid and thus act as the primary debriding agent; alternately, an abrasive tip may be employed (referenced above) as the primary means of debridement (a process commonly known as hydradermabrasion). In the latter, either gas or liquid may be employed to assist in removing debrided skin cells and body fluids and deposit those into a waste receptacle. If liquid is used, those liquids may provide assistive functions including cleaning the treatment area and delivering therapeutic, analgesic, and/or anti-inflammatory agents to the treatment area to facilitate healing, collagen production, reduction of inflammation and other

useful benefits.

VIII. OVERVIEW OF THE ’287 PATENT

38. The ’287 patent relates to an apparatus for treating skin that has a console with a user input device and a handpiece assembly, where the console is coupled to a manifold system “configured to hold releasably a plurality of fluid sources and deliver fluid from at least one of the plurality of fluid sources to the handpiece assembly.” EUNSUNG-1001, Abstract. FIG. 1 of the ’287 patent is representative.

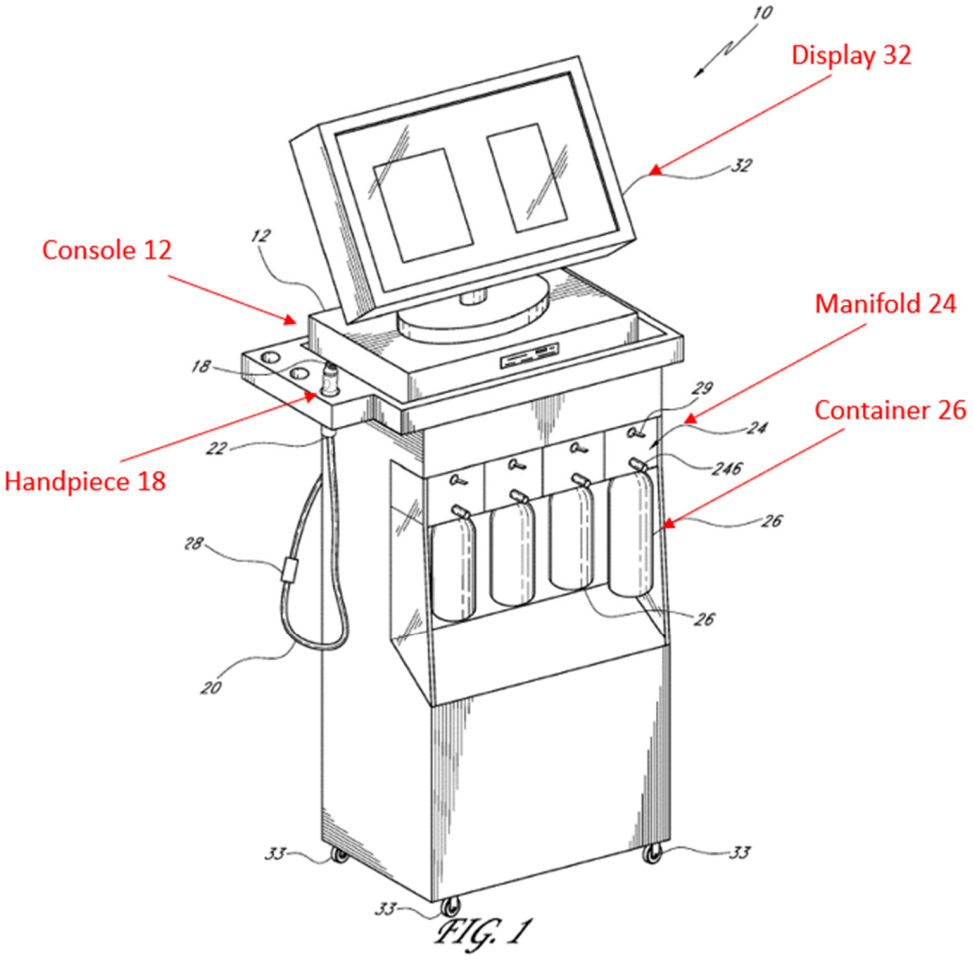

’287 patent, FIG. 1 (annotated)

39. As shown in FIG. 1, the console 12 comprises four casters 33 to allow for easy movement. EUNSUNG-1001, 6:13-15. Containers 26 can be releasably coupled to the manifold system 24, which can deliver treatment material from the containers 26 to the handpiece assembly 18 through the line 20. EUNSUNG-1001, 6:21-27.

40. As shown in FIG. 1, the console 12 comprises the manifold system 24 designed to draw treatment fluid from at least one of the containers 26 based on user selection. EUNSUNG-1001, 17:17-19. The manifold system 24 includes switches 29 (one switch 29 for each container 26), which can be used to turn off/on to permit or prevent fluid flow from the bottles 26. EUNSUNG-1001, 17:19-29.

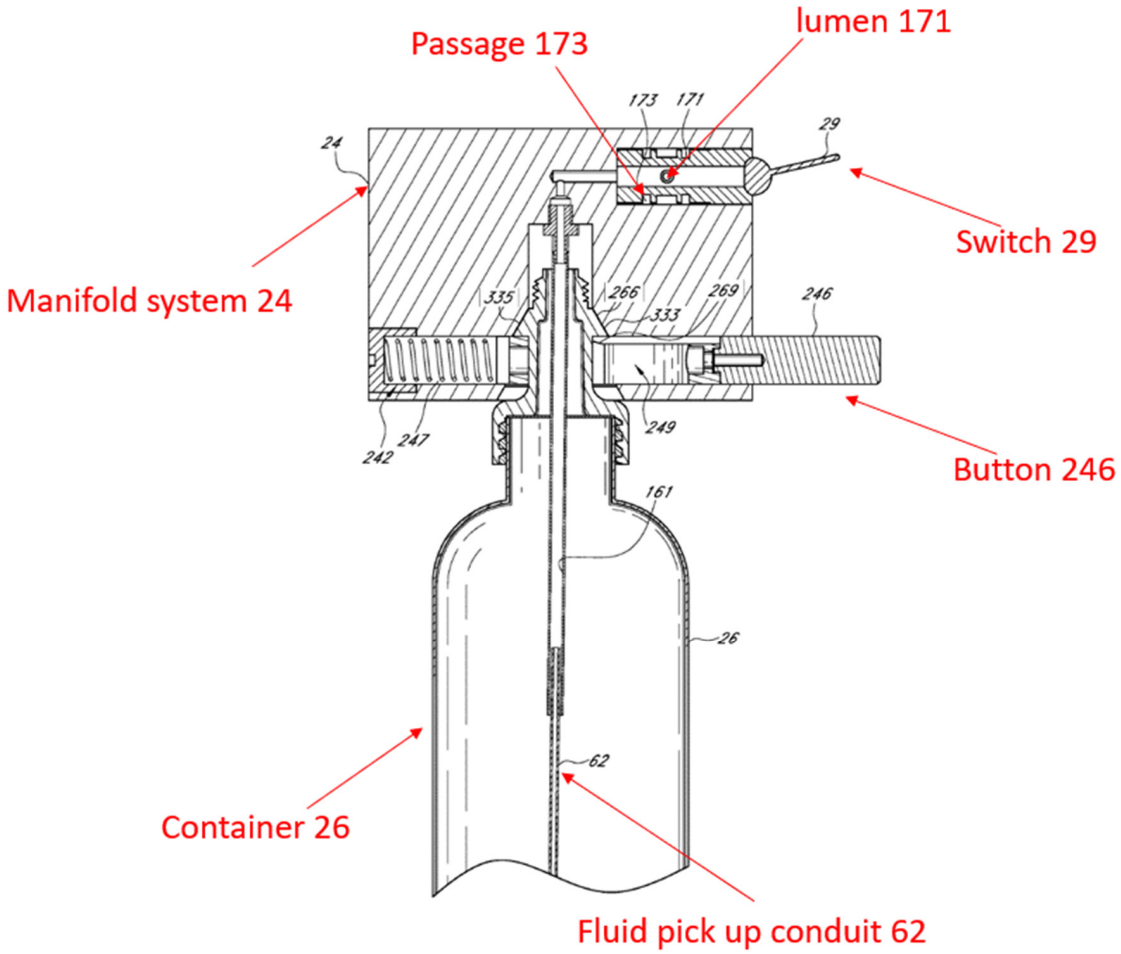

EUNSUNG-1001, FIG. 15C (annotated)

41. The structure of the manifold 24 is further illustrated in FIG. 15B. As shown in FIG. 15B below, container 26 is fluidly connected to the manifold system 24 via fluid pick up conduit 62. EUNSUNG-1001, 18:6-18. The fluid from container 26 can "flow through to and through the lumen 171 towards the line 20" and if the switch 29 is off, "the fluid from one or more of the upstream bottles can flow along the passage 173." *Id*. In this way, the user can control which container 26 is connected to tube 20 (and handpiece 18) via switch 29 (and similar switches

for each of the upstream containers). *Id*.

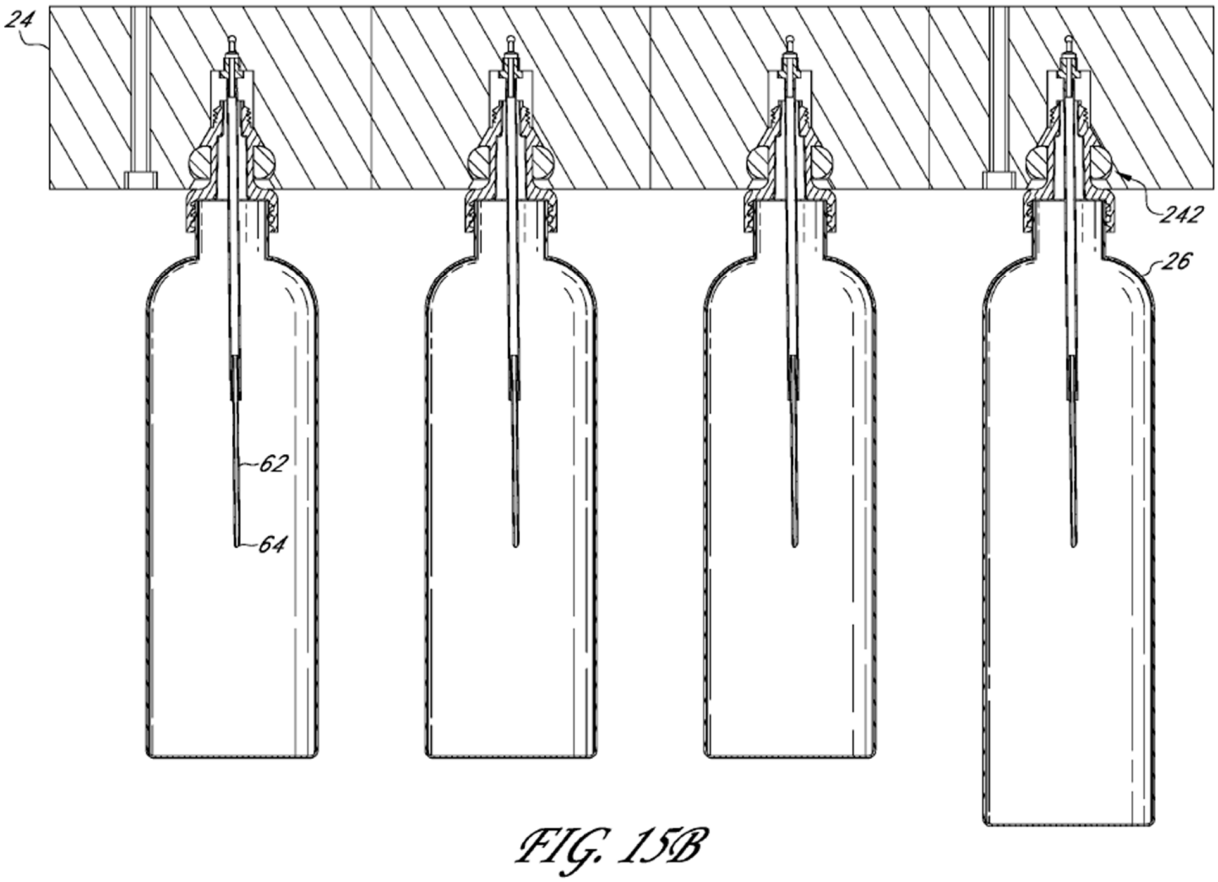

EUNSUNG-1001, FIG. 15B

42. Once fluid is actuated into line 20, the fluid is conducted to handpiece 18 where it is delivered to the subject's skin. Abrasion of the skin is achieved through an abrasive pad 128 positioned at the working end of the handpiece. Alternately, geometric members of the handpiece tip 124 may provide an abrasive action to the skin. The "treatment material" which comprises the fluid delivered to the treatment site (skin 80) includes but is not limited to, "… a substance tending to flow or conform to the outline of its container such as fluid, gas, liquid (e.g.,

serums, water, saline, etc.), gel, fluidized material, additives, and/or a plurality of fine solids." EUNSUNG-1001, 5:50-52.

43. The actuating force for the delivery of the treatment material is negative pressure, aka vacuum: "A vacuum can be applied by the handpiece assembly 18. For example, the console 12 can have a pump that applies a vacuum via the output line 52. The negative pressure draws waste material… out of the handpiece assembly 18." EUNSUNG-1001, 11:4-8. The use of positive pressure to actuate fluid flow is not stated in the '287 patent.

IX. OVERVIEW OF THE PROSECUTION HISTORY

44. The '287 patent was filed on January 9, 2023 as application No. 18/094,884, claiming priority to, among other things, provisional application No. 60/755,310, filed on December 30, 2005. EUNSUNG-1001, Cover.

45. During prosecution, the Examiner rejected then-pending claims 15-19 for double-patenting; rejected then-pending claims 2, 4-6, 12, 13, and 26-28 as anticipated by US 2001/0049511A1 ("Coleman"); rejected then pending claims 8, 9, 30, and 31 as obvious over Coleman and US 6,162,232 ("Shadduck"); and rejected then-pending claims 10 and 11 as obvious over Coleman, Shadduck and US 2003/0018252A1 ("Duchon"). EUNSUNG-1002, 198-201. The Examiner indicated that then-pending claims 3, 7, 14, and 29 were allowable. *Id*.

46. In response, Applicant amended then-pending independent claim 2 to

incorporate the limitations of then-pending claim 3 (indicated to be allowable) to recite, among other things, "the system is configured to deliver the first treatment fluid contained in the first container and the additional treatment fluid contained in the at least one additional container **to the handpiece sequentially**." EUNSUNG-1002, 166. Applicant amended then-pending independent claim 26 to incorporate the limitations of then-pending claim 29 (indicated to be allowable) to recite, among other things, "wherein each of the first container and the at least one additional container includes treatment materials, and wherein treatment materials from the first container and the at least one additional container **are configured to be delivered to the supply conduit sequentially** when the first container and the at least one additional container are connected to the console." EUNSUNG-1002, 166. These amendments led to allowance. EUNSUNG-1002, 62.

47. During prosecution, the examiner did not consider Palmer or Trueba. Karasiuk and Greenberg were buried in an IDS containing more than 400 references. EUNSUNG-1002, 229.

X. SUMMARY OF THE PRIOR ART

1. Karasiuk Overview

48. Similar to the '287 patent, Karasiuk describes a system for conducting microdermabrasion procedures using a handpiece which is in fluid communication with a reservoir. EUNSUNG-1004, Abstract, [0044]-[0045], FIG. 6. The handpiece

is configured to both deliver and retrieve a fluid treatment solution to a targeted area of skin. *Id.*, [0063]-[0066].

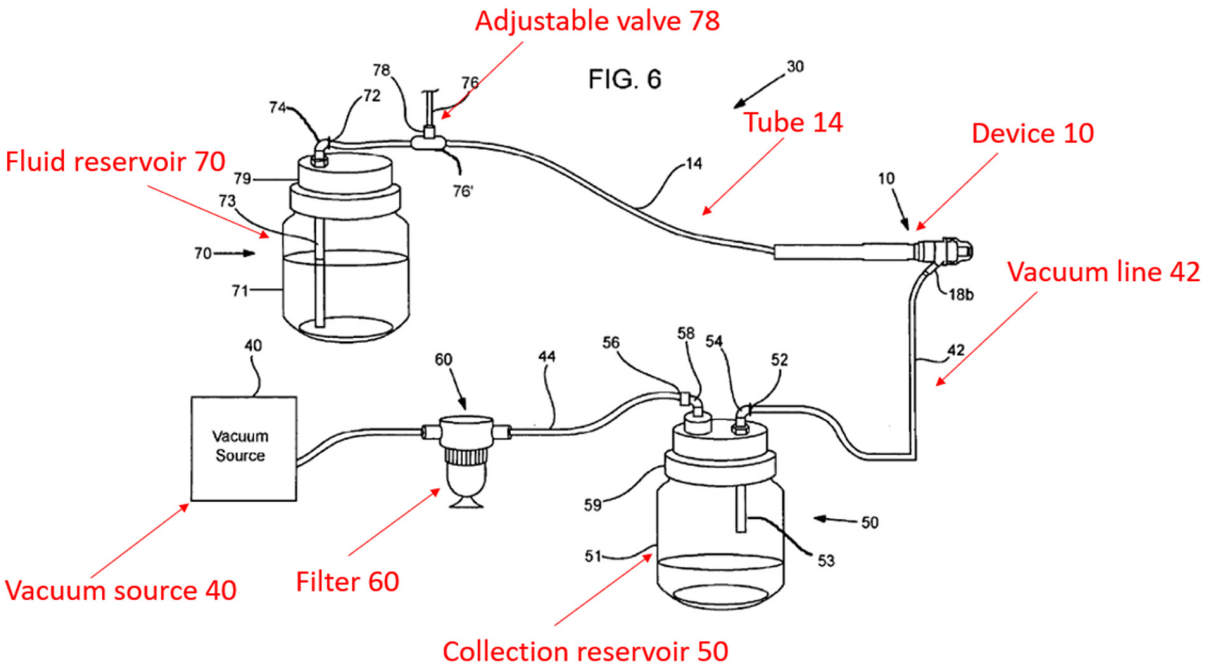

Karasiuk, FIG. 6 (annotated)

49. As shown in FIG. 6, Karasiuk's system includes a handpiece 10 (also referred to as "device 10" in Karasiuk), a vacuum source 40, and a fluid reservoir 70. EUNSUNG-1004, [0056], FIG. 6. Handpiece 10 is connected to collection reservoir 50 and vacuum source 40 by vacuum line 42. EUNSUNG-1004, [0056], FIG. 6. Handpiece 10 is also connected to fluid container 70 via tube 14. EUNSUNG-1004, [0059], FIG. 6.

50. In operation, "device 10 is positioned so as to place tip 20 in contact with the skin surface to be micro abraded and the vacuum source is turned on to establish a vacuum within the system 30." EUNSUNG-1004, [0063], FIG. 6.

"Upon forming the vacuum loop as described above, the fluid contents in fluid reservoir 70 are drawn through tube 14 and into device 10 where they flow out of the cannula 16 through openings 16d and are applied to the skin." EUNSUNG-1004, [0064], FIG. 6. "As the flow of the fluids continues out of the vacuum head base and into vacuum line 42, it carries with it the exfoliated skin particles and any other waste that is removed through the microdermabrasion process." EUNSUNG-1004, [0066], FIG. 6.

51. While showing only one fluid reservoir 70 in FIG. 6, Karasiuk recognizes the desirability of using multiple types of treatment solutions during microdermabrasion. EUNSUNG-1004, [0024] ("other solutions or compounds offering various benefit(s).") [0047] ("application of lotions/vitamins or other fluids"), [0061] (listing various treatment solutions). Specifically, Karasiuk discloses:

> Reservoir 70 may contain solution or a suspension for purposes other than abrasion or pure abrasiveness. General examples, types and/or categories of compounds that may be employed include: beaching formulations (e.g., 2-4% hydroquinone, 2% Kojic Acid, 1% Vitamin K, and 1% Hydrocortisone in a aqueous base); acne treatment formulations (e.g., Salycilic Acid, alcohol base buffered by witch hazel, etc.).fine lines/wrinkle treatment formulations (e.g.,: Hyaluronic acid is an aqueous base); hydrating formulations (e.g., Calendula, vitamins A, D and/or E in a mineral oil base); antioxidant formulations/free radical; scavengers (e.g., vitamins A, E and K in a mineral oil base). Other examples of product categories that may be employed alone or in combination with other compounds include, antiseptics, astringents, cleansers, pore decongestants, balms,

> botanicals, collagen stimulators, herbs, microemulsifiers, oxygen delivery vehicles, proteins, serums, skin firming agents, toners, topical anesthetics, and tyrosinase inhibitors. Individually named products as may be used (with associated benefit indicated parenthetically) include: Aloe Vera (calming); alpha hydroxy acids (peel); alphalipoic acid (antioxidant); benzoil and other peroxides (acne); ceramide (hydrator); copper (toning); copper peptide (toning); CoQ-10 (coenzyme Q-10) and other enzymes (toning); cortisone (calming); glycolic acids (peel); hyaluronic acid (collagen stimulation); hydrolipids (hydrator); hydroquinones (bleaching); lactic acids (peel); magnesium ascorbic phosphate (free radical scavenger, collagen stimulator, bleaching); niacin (vascular dilation); phospholipids (moisturization); potassium (toning, psoriasis), and salycilic acids (acne). Of course, any combination of such elements may be provided--even in connection with abrasive particles.

EUNSUNG-1004, [0061].

52. Karasiuk appreciates that "various changes may be made and equivalents may be substituted without departing from the true spirit and scope of the invention." EUNSUNG-1004, [0070].

53. Karasiuk discloses: "Upon forming the vacuum loop as described above, the fluid contents in fluid reservoir 70 are drawn through tube 14 and into device 10 where they flow out of the cannula 16 through openings 16d and are applied to the skin." EUNSUNG-1004, [0064], FIGS. 1A-1B. Karasiuk further illustrates the structure of hand-held device 10 in FIGS. 1A-1B.

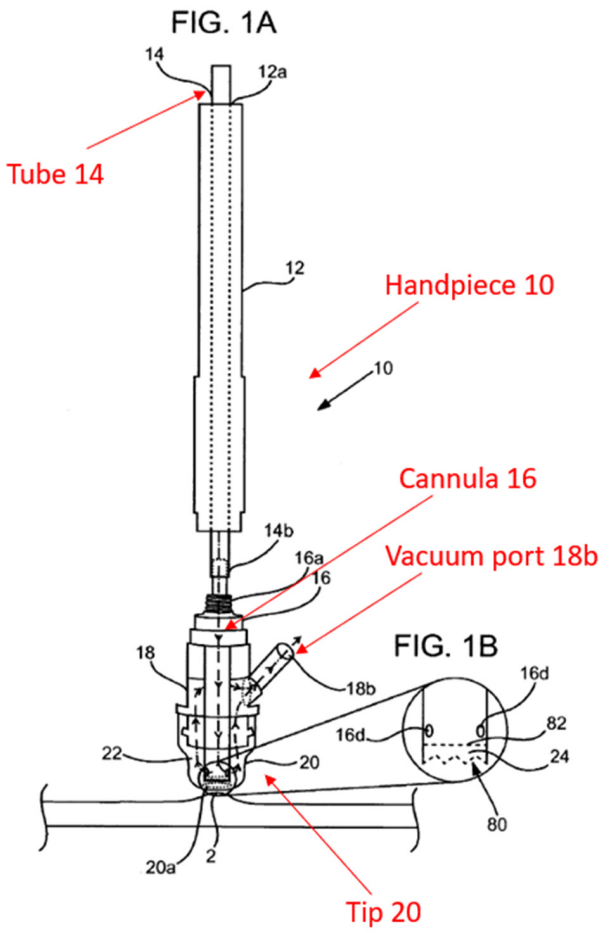

Karasiuk, FIGS. 1A-1B (annotated)

54. As shown in FIGS. 1A-1B, the distal end 14b of tube 14 is connected to cannula 16, which is adapted to be fixed to handle 12 and runs through the center of the handpiece. EUNSUNG-1004, [0045]. A treatment tip 20 (fitted over the end of vacuum head based 18) is smooth surfaced and adapted to glide over the skin surface for application of lotions/vitamins or other fluids thereto through an opening 20a. EUNSUNG-1004, [0047]. Cannula 16 mate with vacuum head base 18 to form an annulus 22 therebetween. EUNSUNG-1004, [0048]. A passageway

16c runs the full length of cannula 15 and forms a continuation of the flow path defined by tube 14, ending in the distal end at an abrasive member 24. EUNSUNG-1004, [0048]. One or more openings 16d are provided through the wall of the distal tubular structure of cannula 16 to establish one or more flow pathways between passageway 16c and annulus 22. EUNSUNG-1004, [0053].

55. A vacuum port 18b is provided in vacuum head base 18 for connection of a vacuum source, which applies vacuum when opening 20a is sealed off by placing it up against the skin, forming a closed loop vacuum flow path. EUNSUNG-1004, [0054]. This flow path is shown in FIG. 1A. *Id*. As shown, the vacuum draws the treatment material to sequentially flow through tube 14, passageway 16c, opening(s) 16d, annulus 22, and vacuum opening 18b. *Id*.; FIG. 1A. Upon forming this vacuum loop, the fluid contents in fluid reservoir 70 are drawn through tube 14 and into device 10 where they flow out of the cannula 16 through openings 16d and are applied to the skin. EUNSUNG-1004, [0064]. As the flow of the fluids continues out of the vacuum head base and into vacuum line 42, it carries with it the exfoliated skin particles and any other waste that is removed through the microdermabrasion process. EUNSUNG-1004, [0066].

2. Palmer Overview

56. Similar to the ’287 patent and Karasiuk, Palmer, titled “Irrigation System and Method for Delivering a Selected One of Multiple Liquid Solutions to

a Treatment Site," discloses a medical device system for delivering a selected medical treatment solution to an application site through a handpiece. EUNSUNG-1005, Abstract, 4:50-68, FIG. 1.

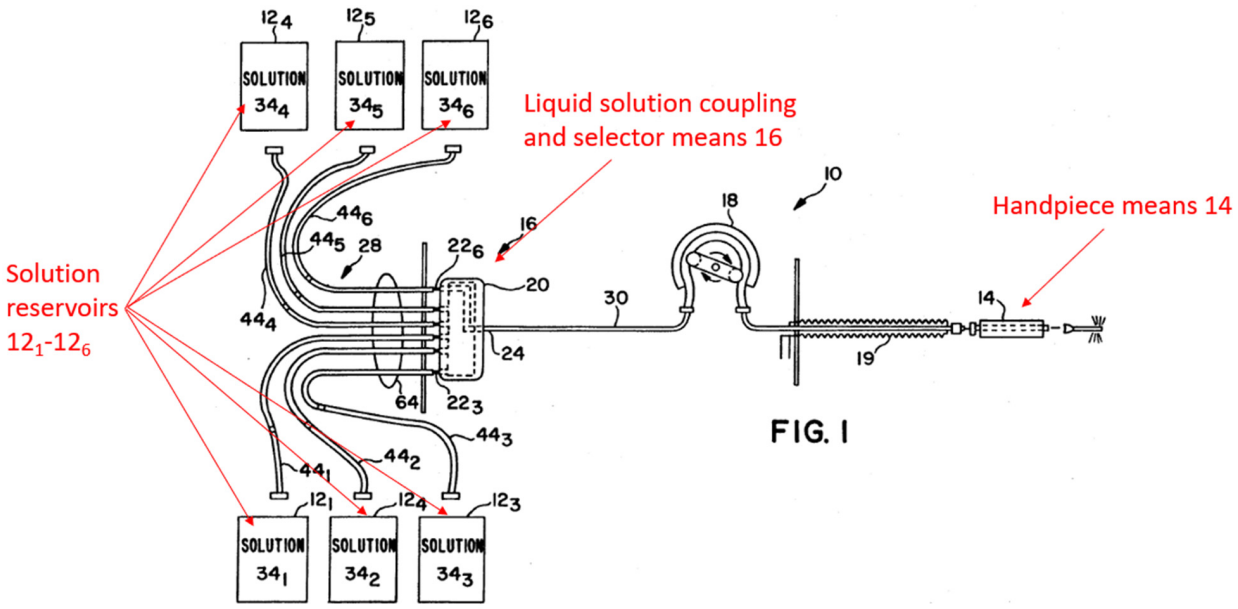

Palmer, FIG. 1 (annotated)

57. As shown in FIG. 1, Palmer's system comprises a handpiece means 14 in fluid communication with a plurality of solution reservoirs 12 (six shown) and a selector means 16 for selecting the fluid container. EUNSUNG-1005, Abstract, 4:50-68, FIG. 1.

58. Similar to the '287 patent, Palmer also discloses "the reservoir storage means 32 in the form of modular single-shelf racks" for increased portability and/or organization. EUNSUNG-1005, 9:58-10:16 ("a high degree of flexibility"), FIGS. 11A ("countertop 168"), 11B ("mobile cart 170"), 11C ("cabinet 172

underneath a counter"); As shown in FIG. 11B below, for example, Palmer's "mobile cart 170" includes the control unit enclosure 35 and the reservoir storage means 32.

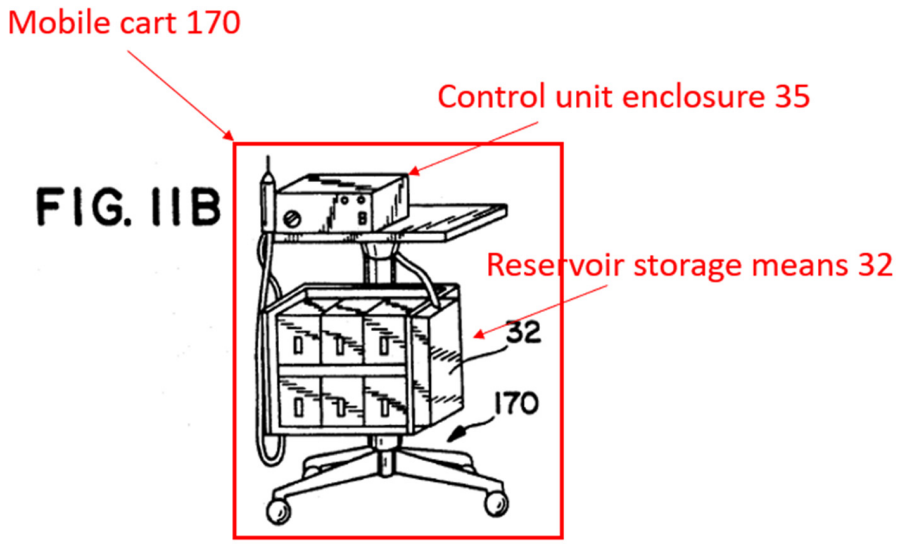

Palmer, FIG. 11B (annotated)

59. Palmer also discloses "selector valve means 20 comprises a main body 70 having a central cylinder core or stem 72 rotatably mounted therein. Six liquid inlet passages 74 are formed through the body 70, each inlet passage opening into a respective input port 22 at its outer end, and at its inner end, into the bore which receives the rotatable core 72 in a plane common with the inner ends of the other inlet passages 74. A liquid outlet passage 76 is formed in the rotatable core 72". EUNSUNG-1005, 8:6-14. Selector valve means 20 is directly analogous to the manifold system (aka, "block" in the claims) of the '287 patent, having fluidic input and output, valving, switching, and manifolding functionalities. The

cylindrical exterior form of the valve means 20 does not impact these functionalities and thus is non-limiting; indeed, the exterior form of valve means 20 would comprise a more block-like rectilinear geometry and the component would function the same. Moreover, the exterior form of the manifold system (aka, block) is not limited to any disclosure of the '287 patent. Both manually-switched rotary fluidic valves (Palmer) and fluidic block manifold structures (the '287 patent) were well known fluidics components by the Critical Date.

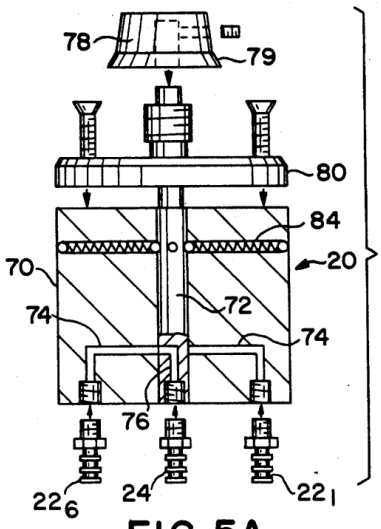

FIG. 5A

Palmer, FIG. 5A

3. Trueba Overview

60. Similar to Karasiuk and Palmer, Trueba discloses a fluid delivery system that includes multiple containers (e.g., Trueba's containers 50-56) and pump means (e.g., Trueba's ejection heads 40-46). EUNSUNG-1008, Abstract, 8:49-11:3, FIG. 3.

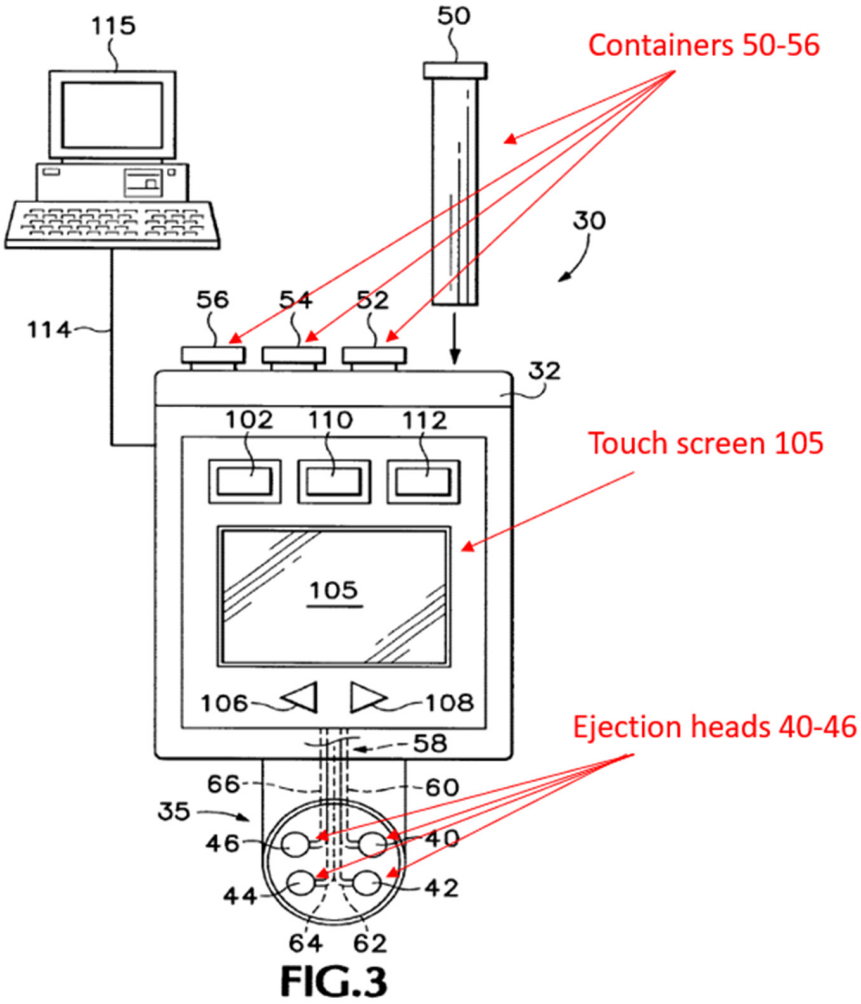

Trueba, FIG. 3 (annotated)

61. Trueba's fluid delivery is controlled by a computer (e.g., Trueba's controller 100) linked to a user input (e.g., external computer 115 or touch screen 105): "Controller 100 operates to apply firing signals to the ejection heads 40-46, which respond by ejecting fluid from reservoirs 50-56." EUNSUNG-1008, 10:60-62. Touch screen 105 "may include a series of images that, when touched with a finger or stylus, program the controller 100." EUNSUNG-1008, 11:50-59, FIG. 3. The display screen 105 can be used to "indicate which selections have been made"

and to display "information such as desired dosages, frequency, and potential side effects." EUNSUNG-1008, 11:42-49, FIG. 3. Further, the touch screen can be operated to select a particular drug or dosage, or to program the controller. EUNSUNG-1008, 11:60-12:8.

62. Trueba discloses: "Multiple compositions can be dispensed simultaneously or sequentially." EUNSUNG-1008, 11:4-5. For example, corticosteroid from reservoir 52 would be administered to a subject having stable reactive airway disease, but if symptoms persist, then the β-agonist from reservoir 50 also can be delivered (for example, in response to pressing an activation button or programming the applicator)." EUNSUNG-1008, 11:15-20.

63. Using Trueba's computer control, multiple compositions can be automatically dispensed simultaneously or sequentially. EUNSUNG-1008, 3:4-8, 5:18-6:9 ("Several modules may contain the same or different bioactive compositions"), 6:10-16 ("may be used to apply the agent to an area of skin for topical application of a bioactive composition"), 11:4-34 ("Multiple compositions can be dispensed simultaneously or sequentially").

64. Further, the device can be programmed to respond to changing clinical circumstances. EUNSUNG-1008, 11:15-20 ("For example, only the corticosteroid from reservoir 52 would be administered to a subject having stable reactive airway disease. However, if symptoms persist, then the β-agonist from

reservoir 50 also can be delivered."). Further, the device can be programmed to "prevent unauthorized alteration of dosages" and "permit certain ranges of dosages to be administered." EUNSUNG-1008, 12:2-9.

4. Greenberg Overview

65. Greenberg describes a system for conducting microdermabrasion procedures using a handpiece (e.g., hand tool 16) to apply treatment materials to a targeted area of skin. EUNSUNG-1006, Abstract, [0049]-[0064], FIG. 1.

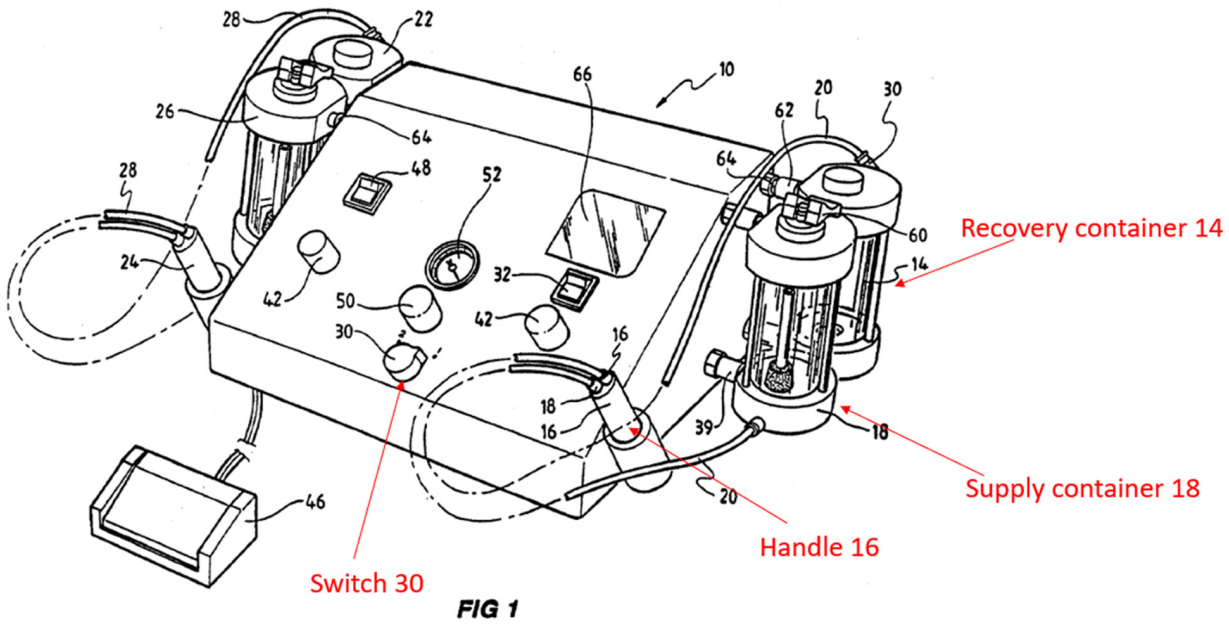

Greenberg, FIG. 1 (annotated)

66. Greenberg discloses that its system comprises: (1) "a pneumatic source operatively connected to a recovery container and to a hand tool"; (2) "a plurality of supply containers including particulates"; (3) "a valve selectively connecting said pneumatic source, recovery container and hand tool to a selected

one of said supply containers." EUNSUNG-1006, [0013]-[0016]. In operation, "said pneumatic source provides for an air flow through the recovery container, hand tool and the selected supply container in communication with same, drawing said particles from the supply container through the hand tool and into the recovery container, said hand tool positioned on a surface to be treated and including an aperture so located that particles passing through said hand tool are caused to impinge on the surface thereby treating it." EUNSUNG-1006, [0017], FIG. 3. Greenberg describes "the pneumatic source is a vacuum pump." EUNSUNG-1006, [0026], [0004], [0049]-[0059], [0066].

67. Greenberg also describes an implementation that provides "a choice of different particles to use in a micro-dermabrasion machine," which "can be achieved in the present apparatus by having an apparatus with a plurality of supply containers housing different particles" as illustrated in FIG. 5. EUNSUNG-1006, [0073]-[0077]. In FIG. 5, Greenberg's device comprises three supply containers (e.g., containers 90, 94, and 98), and valves 106 and 108 can control which container is connected to handpiece 102 and recovery container 104. EUNSUNG-1006, [0077], FIG. 5. In operation, "[a] supply container can be chosen to be in communication with handle 102 and recovery container 104 by the use of valve 106 that controls air flow into the respective supply container and valve 108 that th[e]n connects that supply container to the handle 102 and recovery container

104." EUNSUNG-1006, [0077], FIG. 5.

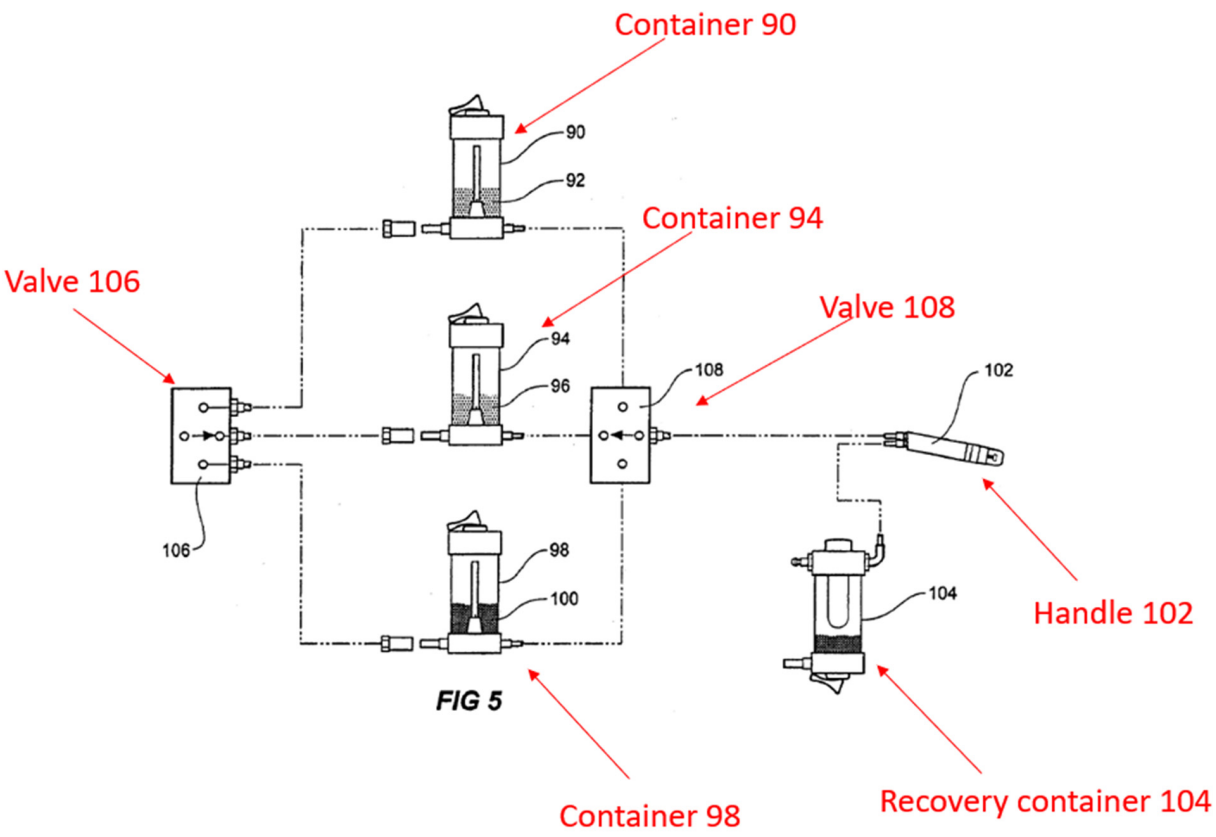

Greenberg, FIG. 5 (annotated)

68. A POSITA would have readily appreciated and found it obvious that FIG. 5's structure would have been readily incorporated into FIG. 1's apparatus. EUNSUNG-1006, [0077] ("This can be achieved in **the present apparatus** by having an apparatus with a plurality of supply containers"). In particular, FIG. 5's containers (90, 94, 98) and valves (106, 108) would be used instead of FIG. 1's supply containers 18 and 26, FIG. 5's recovery container 104 would be used instead of FIG. 1's recovery containers 14 and 22, and FIG. 5's single handle 102 replaces FIG. 1's two handles 16 and 24. To connect the multiple containers 90,

94, 98 with the single handle 102, FIG. 5's control valves (e.g., valves 106 and 108) are used to enable selective fluid communication with each of the containers. Other structures described with respect to FIGS. 1-4 would have been similarly applicable for the FIG. 5 implementation. For example, the tubing (e.g., tube 20) described in FIG. 1 would have been similarly used for the connection between FIG. 5's valve 108 and handle 102. Further, each of FIG. 5's multiple containers (e.g., containers 90, 94, 98, 104 would have been connected to FIG. 1's console (e.g., apparatus 10) in the same manner as FIG. 1's containers 14, 18, 22, 26. EUNSUNG-1006, [0053], [0062], FIG. 1. Notably, the same mechanism and operation described with respect to FIG. 1 would have been used for FIG. 5's implementation.

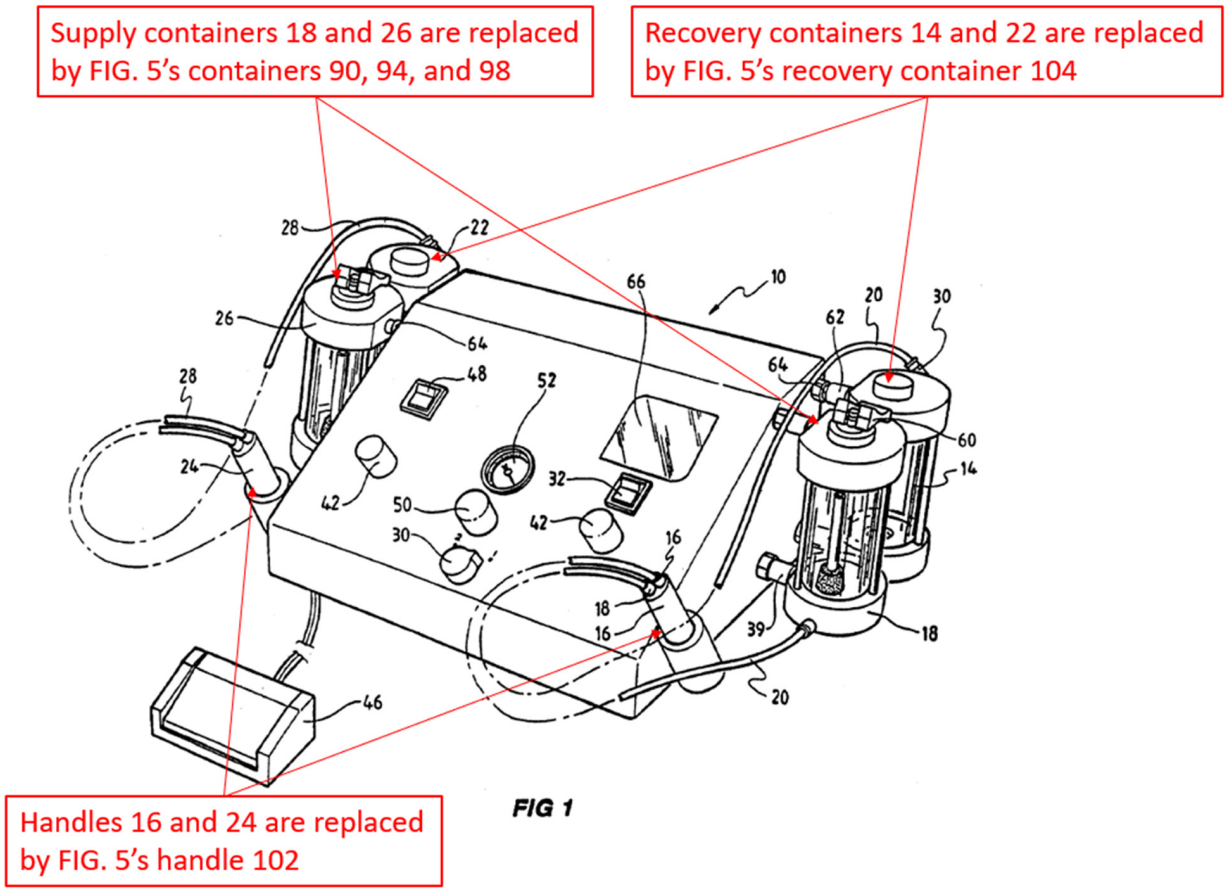

Greenberg, FIG. 1 (annotated)

69. Greenberg discloses that "the pneumatic source is a vacuum pump" (EUNSUNG-1006, [0026], [0004], [0049]-[0059], [0066]) and "said pneumatic source provides for an air flow through the recovery container, hand tool and the selected supply container in communication with same, drawing said particles from the supply container through the hand tool and into the recovery container." EUNSUNG-1006, [0017]. The same mechanism and operation would have been used for FIG. 5's implementation by, for example, connecting a vacuum source (e.g., vacuum pump 12) to recovery container 104.

70. Of note, Greenberg provides a means of pressure stabilization through the use of valve 106 arranged fluidically upstream from the supply containers 90, 94, and 98. Valve 106 allows selectable valving to the inlets of the containers and thereby provides air flow into the container while fluidized abrasive is exiting the container through valve 108. If valves 106 and 108 are not both open, treatment material will not flow from the container.

XI. [GROUND 1A] – Karasiuk And Palmer

1. The Karasiuk-Palmer Combination

71. It is my opinion that a POSITA would have been motivated to combine Karasiuk and Palmer with a reasonable expectation of success. In the Karasiuk-Palmer combination ("Karasiuk-Palmer"), Karasiuk's reservoir 70 would have been modified based on Palmer's teachings of multiple containers (e.g., Palmer's reservoirs 12_1-12_6) and selector means (Palmer's selector means 16), an example of which is illustrated in Modified FIG. 6 below.

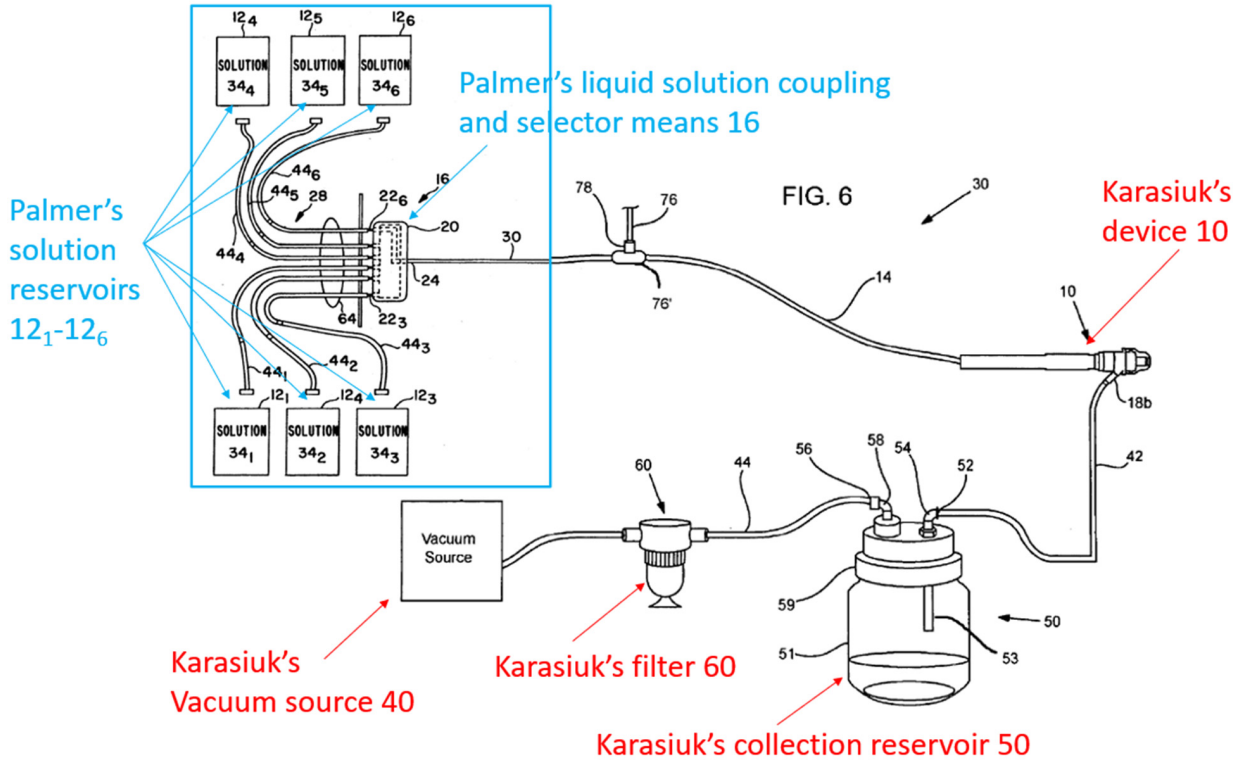

Modified FIG. 6 of Karasiuk (annotated)

72. Further, Karasiuk's vacuum source would be used to collect debris and pump the treatment fluids from multiple fluid containers (e.g., Palmer's fluid containers) in the combination. Instead of being connected to a single reservoir 70, Karasiuk's tube 72 would replace Palmer's second tubing means 30, or would be connected to the second tubing means 30 or an output from the multiple fluid containers (e.g., Palmer's output 24) to achieve benefits that flow from selection of different treatment solutions. In the resulting system, the vacuum source serves two functions simultaneously: (1) pumping the treatment solution and (2) removing waste/debris, as described in Karasiuk. EUNSUNG-1004, [0020],

[0056], [0064], [0066].

73. In addition to adapting Karasiuk's system to use multiple treatment containers in the Karasiuk-Palmer combination, a POSITA would have been motivated and found it obvious to place both (1) multiple containers and selector means (e.g., Palmer) and (2) handpiece, waste container, filter, and vacuum source (e.g., Karasiuk) in a modular structure for increased portability and/or organization, as taught by Palmer. EUNSUNG-1005, 9:58-10:2. In this regard, Palmer discloses that "[b]y providing the reservoir storage means 32 in the form of modular single-shelf racks, a high degree of flexibility is provided…the reservoir storage means 32 can be placed on a countertop 168 (FIG. 11A), or on a mobile cart 170 (FIG. 11B) or in a cabinet 172 underneath a counter (FIG. 11C)." EUNSUNG-1005, 9:63-10:2, FIGS. 11A-11C. In fact, such modular configuration for medical devices was well-known before the Critical Date. EUNSUNG-1011, EUNSUNG-1006.

74. For example, Duchon discloses a medical fluid delivery system where the user can choose the desired fluid (e.g., contrast material or saline) from multiple fluid containers (e.g., reservoir 22 or bag 50). EUNSUNG-1010, Abstract, FIG. 1, [0006]. Duchon discloses in relevant part:

> [0063] **Console 12** houses the electrical controls for system 10, together with the motors which drive piston 20 and peristaltic pump 44. On the front surface of **console 12**, user interface 55 provides control switches 56 and display 58 through which the

> user may enter control settings and monitor the operational state of system 10. The console can be free-standing, preferably configured for mounting on a transport cart assembly.

EUNSUNG-1010, [0063].

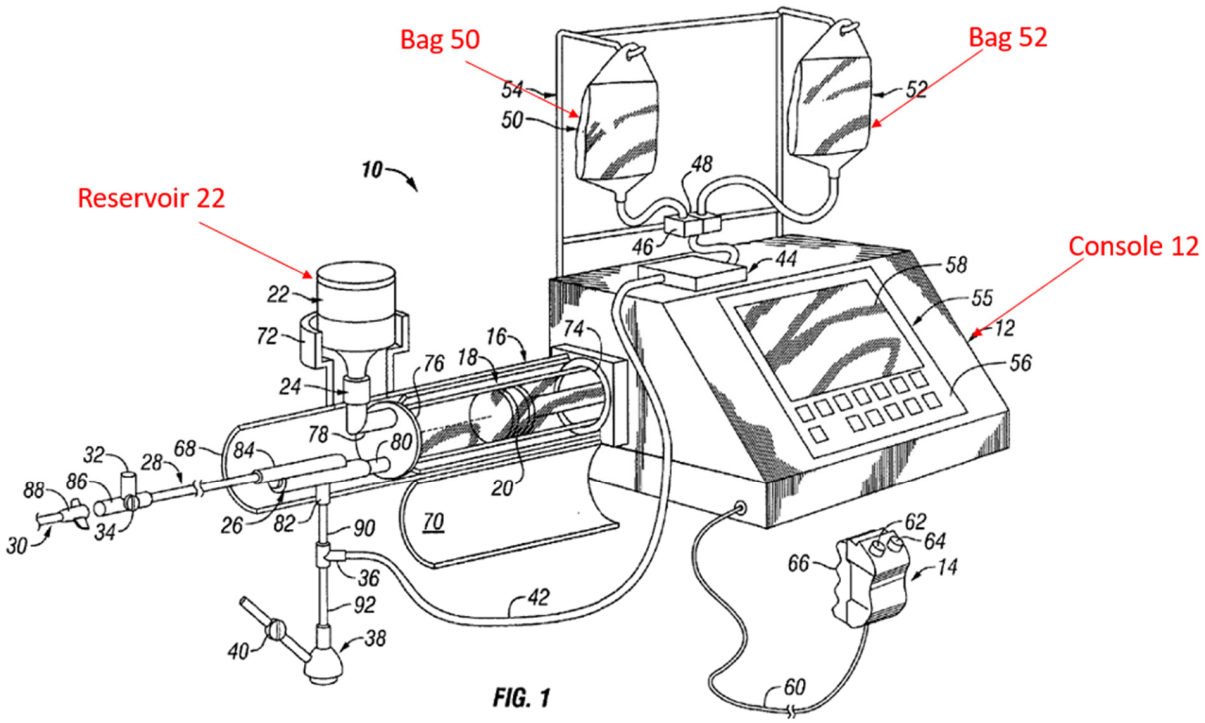

Duchon, FIG. 1 (annotated)

75. As another example, Armstrong (EUNSUNG-1011) discloses a system 21 comprising (1) a supply station 22 which houses multiple containers (e.g., fluid reservoirs 46) and (2) a control box 82 which houses a selective coupling means 24 (e.g., selector valve 74) to select among the fluid sources. EUNSUNG-1011, FIG. 2, 4:57-60, 5:55-61.

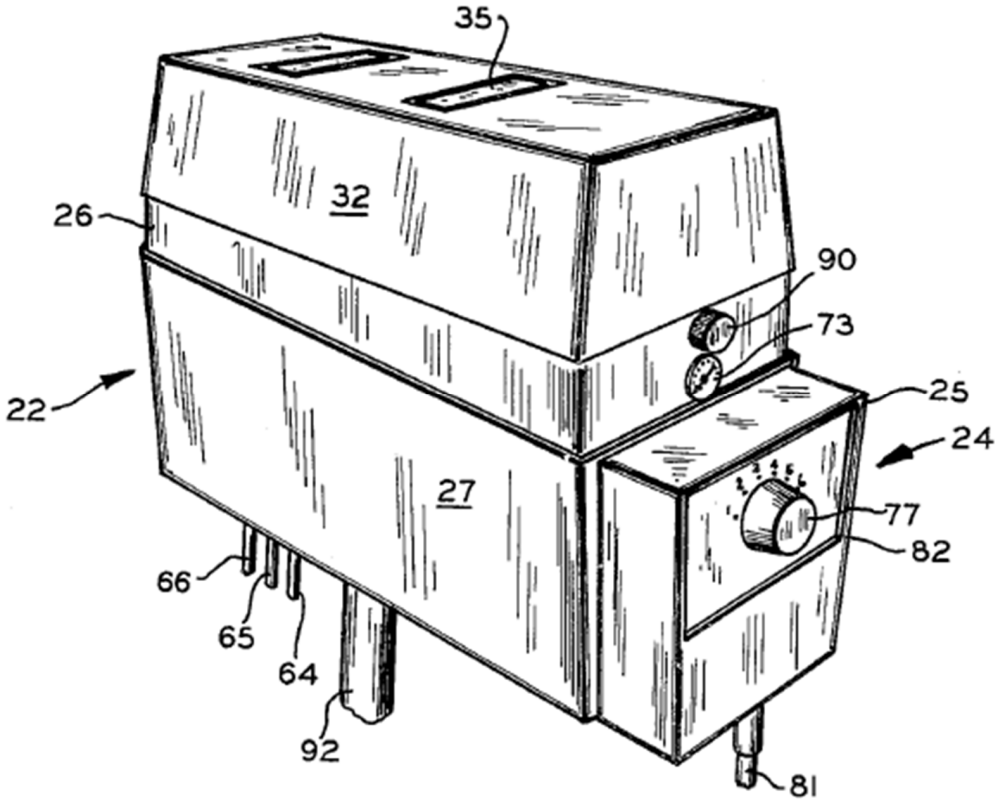

Armstrong, FIG. 2

76. Similarly, Greenberg (EUNSUNG-1006) discloses a modular apparatus 10 that includes vacuum pump 12 and switch 30 and connects to multiple containers and handle 16. EUNSUNG-1006, FIGS. 1 and 5.

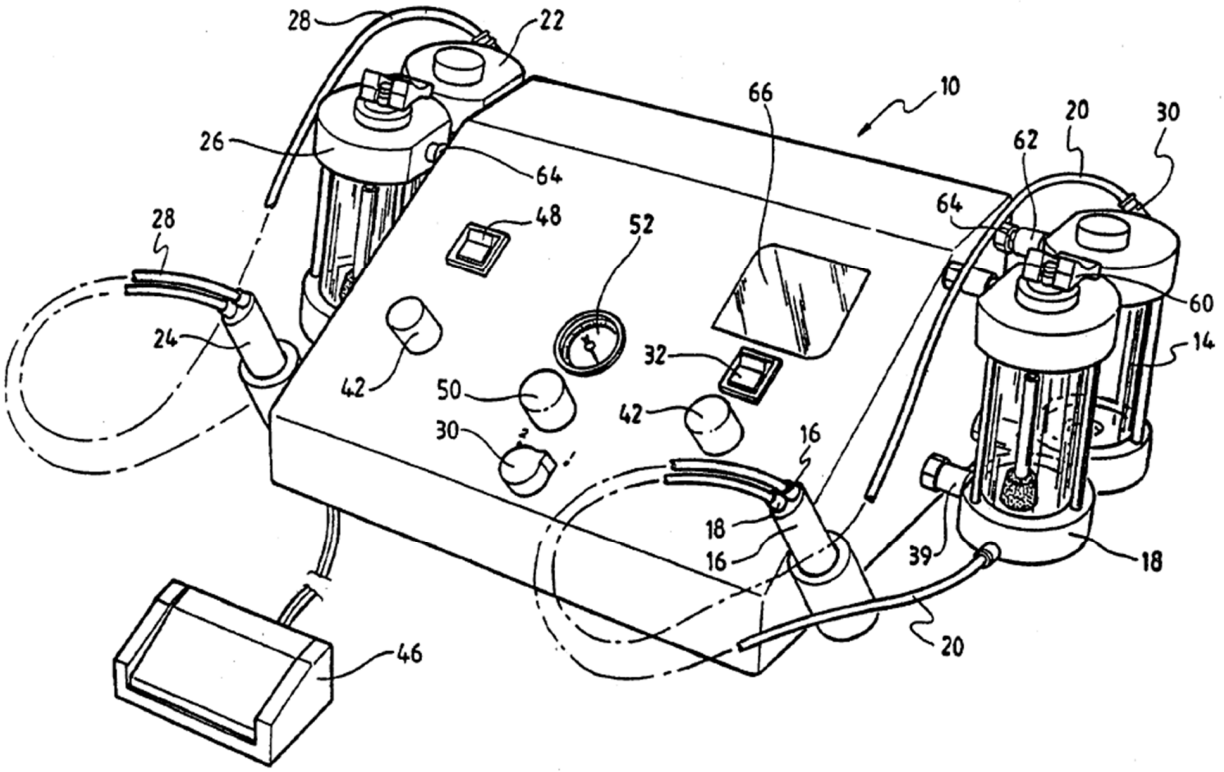

FIG 1

Greenberg, FIG. 1

77. As another example, Wunsch discloses an apparatus (e.g., console 10) for sequentially dispensing a plurality of solutions through a manifold that is connected to each of the solutions to be administered. EUNSUNG-1020, Abstract, 7:39-56, 8:17-26, FIGS. 1-4. As shown in FIG. 1, the manifold selector 17 includes a plurality of valves 40, which control the flow of solution from the plurality of bottles 15. EUNSUNG-1020, 6:18-48, 7:16-56. In operation, the user can program the sequencer timer 13 to automatically operate the valves 40 to achieve automatic switching between different solutions and sequential delivery of different solutions. EUNSUNG-1020, 9:36-10:64.

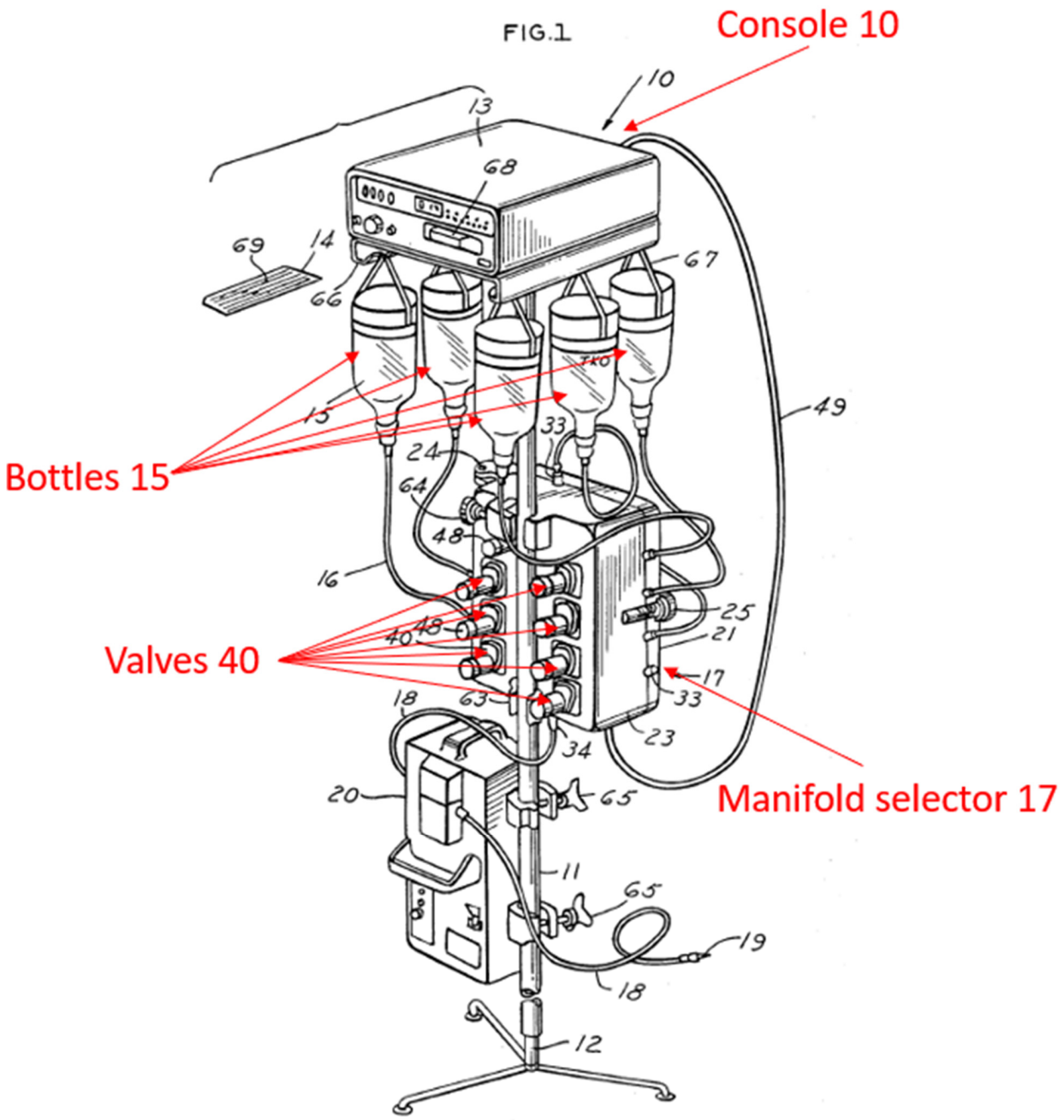

Wunsch, FIG. 1 (annotated)

78. Several reasons would have prompted a POSITA to modify Karasiuk's system based on Palmer's teachings. As discussed in Section X.1, Karasiuk's system uses a handpiece for applying a fluid treatment solution to a

treatment site during microdermabrasion and a vacuum for collecting waste from the microdermabrasion procedure. EUNSUNG-1004, Abstract, [0044]-[0045], [0056], [0059], [0063]-[0066], FIG. 6. Karasiuk recognizes the desirability of using multiple types of treatment solutions during microdermabrasion. EUNSUNG-1004, [0024] ("other solutions or compounds offering various benefit(s)."), [0047] ("application of lotions/vitamins or other fluids"), [0061] (listing various treatment solutions). Specifically, Karasiuk discloses:

> Reservoir 70 may contain solution or a suspension for purposes other than abrasion or pure abrasiveness. General examples, types and/or categories of compounds that may be employed include: beaching formulations (e.g., 2-4% hydroquinone, 2% Kojic Acid, 1% Vitamin K, and 1% Hydrocortisone in a aqueous base); acne treatment formulations (e.g., Salycilic Acid, alcohol base buffered by witch hazel, etc.).fine lines/wrinkle treatment formulations (e.g.,: Hyaluronic acid is an aqueous base); hydrating formulations (e.g., Calendula, vitamins A, D and/or E in a mineral oil base); antioxidant formulations/free radical; scavengers (e.g., vitamins A, E and K in a mineral oil base). Other examples of product categories that may be employed alone or in combination with other compounds include, antiseptics, astringents, cleansers, pore decongestants, balms, botanicals, collagen stimulators, herbs, microemulsifiers, oxygen delivery vehicles, proteins, serums, skin firming agents, toners, topical anesthetics, and tyrosinase inhibitors. Individually named products as may be used (with associated benefit indicated parenthetically) include: Aloe Vera (calming); alpha hydroxy acids (peel); alphalipoic acid (antioxidant); benzoil and other peroxides (acne); ceramide (hydrator); copper (toning); copper peptide (toning); CoQ-10 (coenzyme Q-10) and other enzymes (toning); cortisone (calming); glycolic acids (peel); hyaluronic acid (collagen stimulation); hydrolipids (hydrator); hydroquinones (bleaching); lactic acids (peel); magnesium ascorbic phosphate (free radical scavenger, collagen stimulator,

> bleaching); niacin (vascular dilation); phospholipids (moisturization); potassium (toning, psoriasis), and salycilic acids (acne). Of course, any combination of such elements may be provided--even in connection with abrasive particles.

EUNSUNG-1004, [0061].

79. Based on general knowledge in the field, a POSITA would have understood that multiple treatment solutions are desirable during microdermabrasion. For example, Lee discloses delivering vitamin C during microdermabrasion to confer various benefits including inhibition of melanogenesis, promotion of collagen biosynthesis, prevention of free radical formation, and acceleration of wound healing. EUNSUNG-1016, 1. Further, Burgess discloses that when microdermabrasion is completed, a moisturizer with adequate sunscreen is applied. EUNSUNG-1013, 86. This is because microdermabrasion partially removes the protective barrier of the skin and extra protection is needed.

80. Further, Karasiuk appreciates that "various changes may be made and equivalents may be substituted without departing from the true spirit and scope of the invention." EUNSUNG-1004, [0070]. From this disclosure and a POSITA's general knowledge, a POSITA would have been motivated to consider the use of multiple containers of treatment solutions to improve the flexibility and functionality offered by Karasiuk's system. Indeed, the fluid delivery techniques using multiple containers of treatment solutions with Karasiuk's handpiece were

well-known and part of a POSITA's general knowledge by the Critical Date. EUNSUNG-1005, Abstract, FIG. 1, 2:48-51, claim 1; EUNSUNG-1008, FIG. 3, 3:23-26, 11:4-34; EUNSUNG-1007, FIG. 2, 1:60-63, claim 1; EUNSUNG-1011, Abstract, FIG. 1, 2:29-49, claim 1; EUNSUNG-1020, Abstract, 7:39-56, 8:17-26, FIGS. 1-4. For example, Palmer discloses a medical device system for delivering a selected medical treatment solution to an application site through a handpiece.

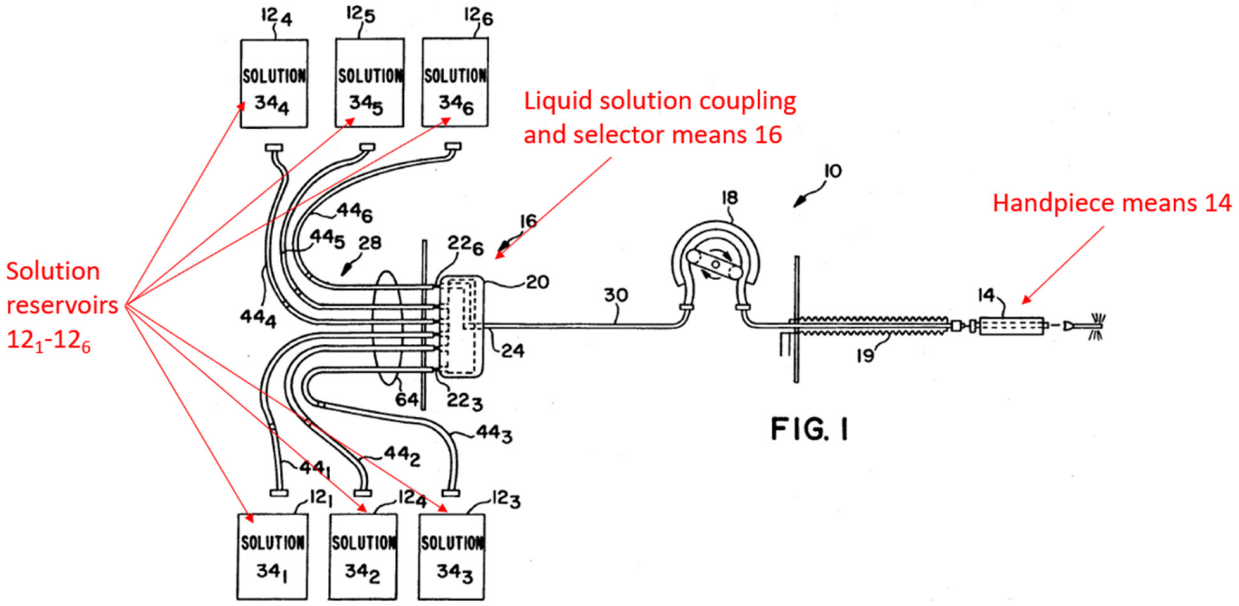

Palmer, FIG. 1 (annotated)

81. As shown in FIG. 1, Palmer's system comprises a handpiece means 14 in fluid communication with a plurality of solution reservoirs 12 (six shown) and a selector means 16 for selecting the fluid container. EUNSUNG-1005, Abstract, 4:50-68, FIG. 1. As discussed previously, FIG. 5A of Palmer's system comprises a selector valve means 20 which is a switchable manifold rotary valve

component. Having multiple input lumens, an output lumen, valving means, switching means, and a manifolding means, Palmer's selector valve means 20 predicts the manifold system, aka "block", of the '287 patent. As another example, Trueba discloses a fluid delivery system that includes multiple containers (e.g., Trueba's containers 50-56) and pump means (e.g., Trueba's ejection heads 40-46) that can selectively deliver the desired solution. EUNSUNG-1008, Abstract, 8:49-11:3, FIG. 3.

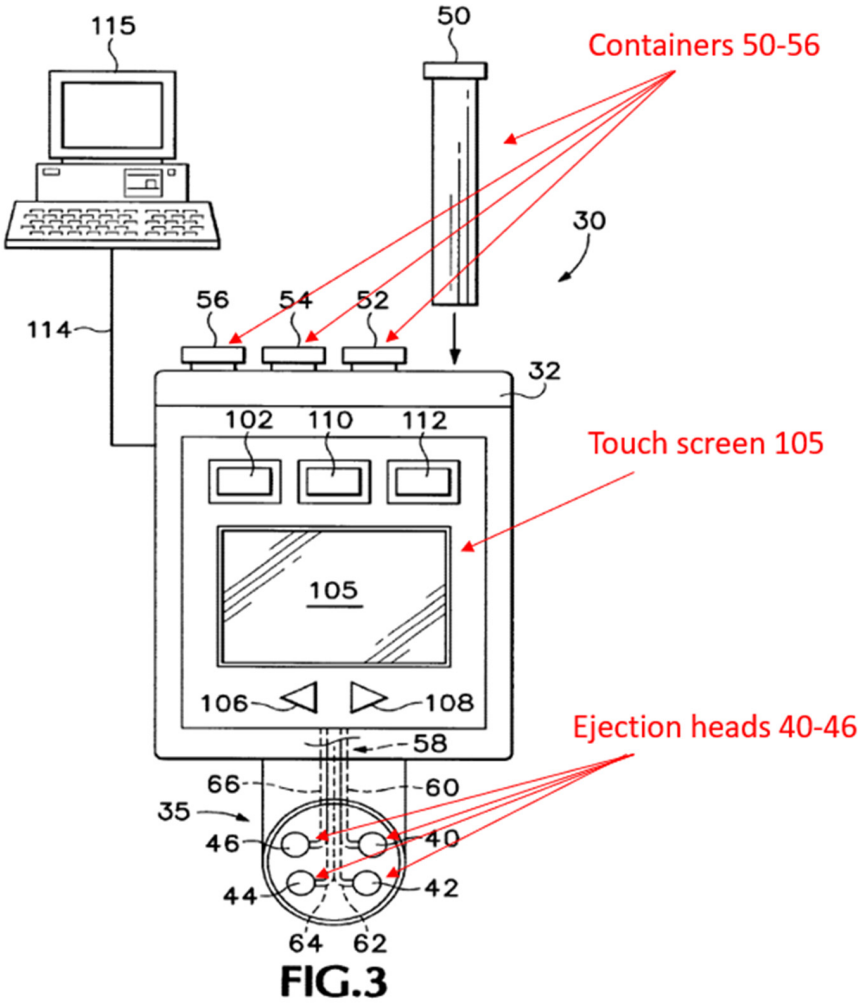

Trueba, FIG. 3 (annotated)

82. As another example, Armstrong discloses a medical fluid delivery system where the user can choose a desired fluid from several fluid containers (e.g., reservoirs 46). EUNSUNG-1011, Abstract, 2:12-15, 5:55-61, FIG. 1, FIG. 2, FIG. 7.

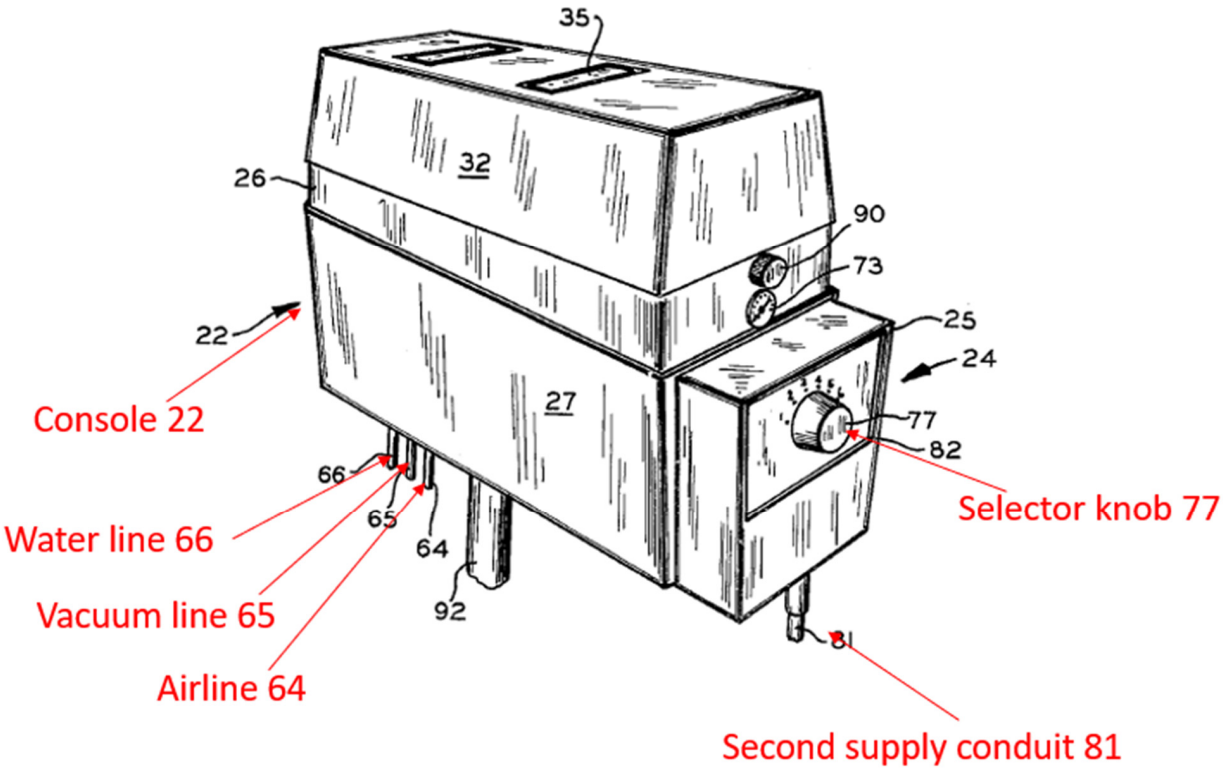

Armstrong, FIG. 2 (annotated)

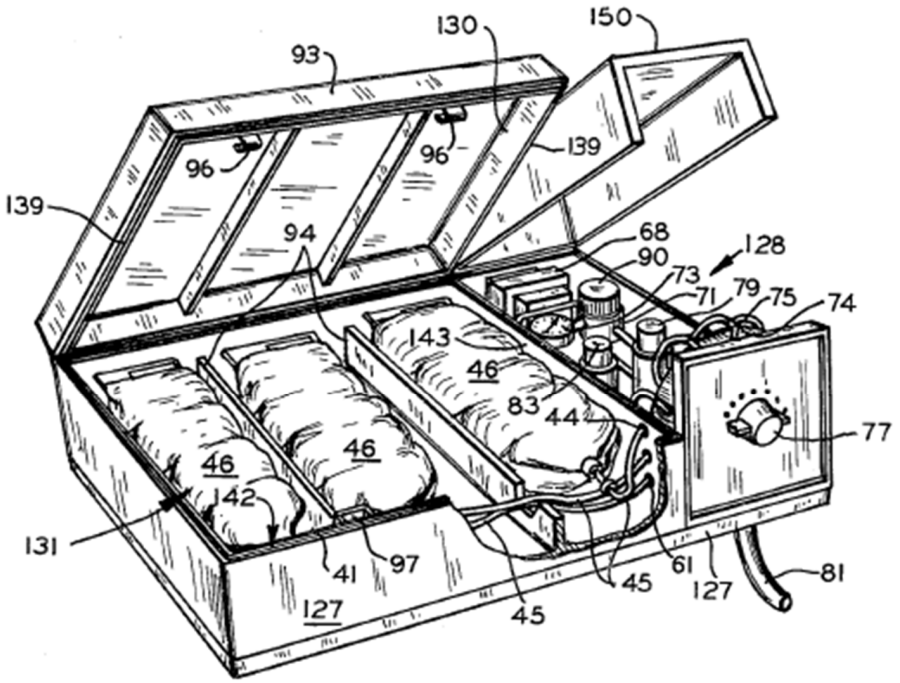

FIG. 7

Armstrong, FIG. 7

83. As another example, Pond discloses a fluid dispensing assembly that can be used to deliver the desired fluid from a plurality of fluid containers (e.g., reservoirs 30) to the handpiece (e.g., handpiece 80). EUNSUNG-1007, Abstract, 2:1-21, 4:41-67.

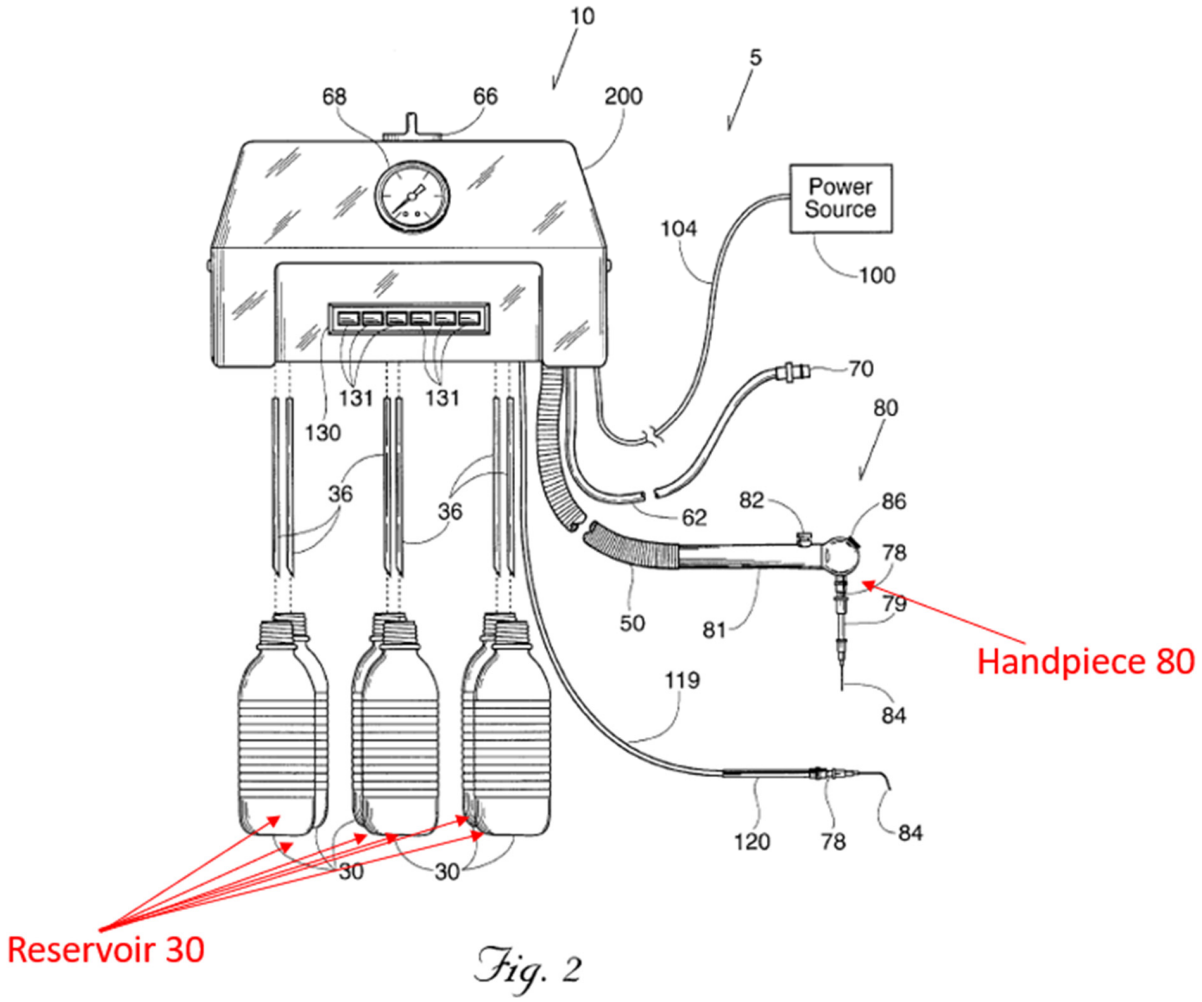

Pond, FIG. 2 (annotated)

84. As another example, Wunsch discloses an apparatus (e.g., console 10) for sequentially dispensing a plurality of solutions through a manifold (e.g., manifold selector 17) that is connected to each of the solutions to be administered. EUNSUNG-1020, Abstract, 7:39-56, 8:17-26, FIGS. 1-4. As shown in FIG. 1, the manifold selector 17 includes a plurality of valves 40, which control the flow of solution from the plurality of bottles 15. EUNSUNG-1020, 6:18-48, 7:16-56.

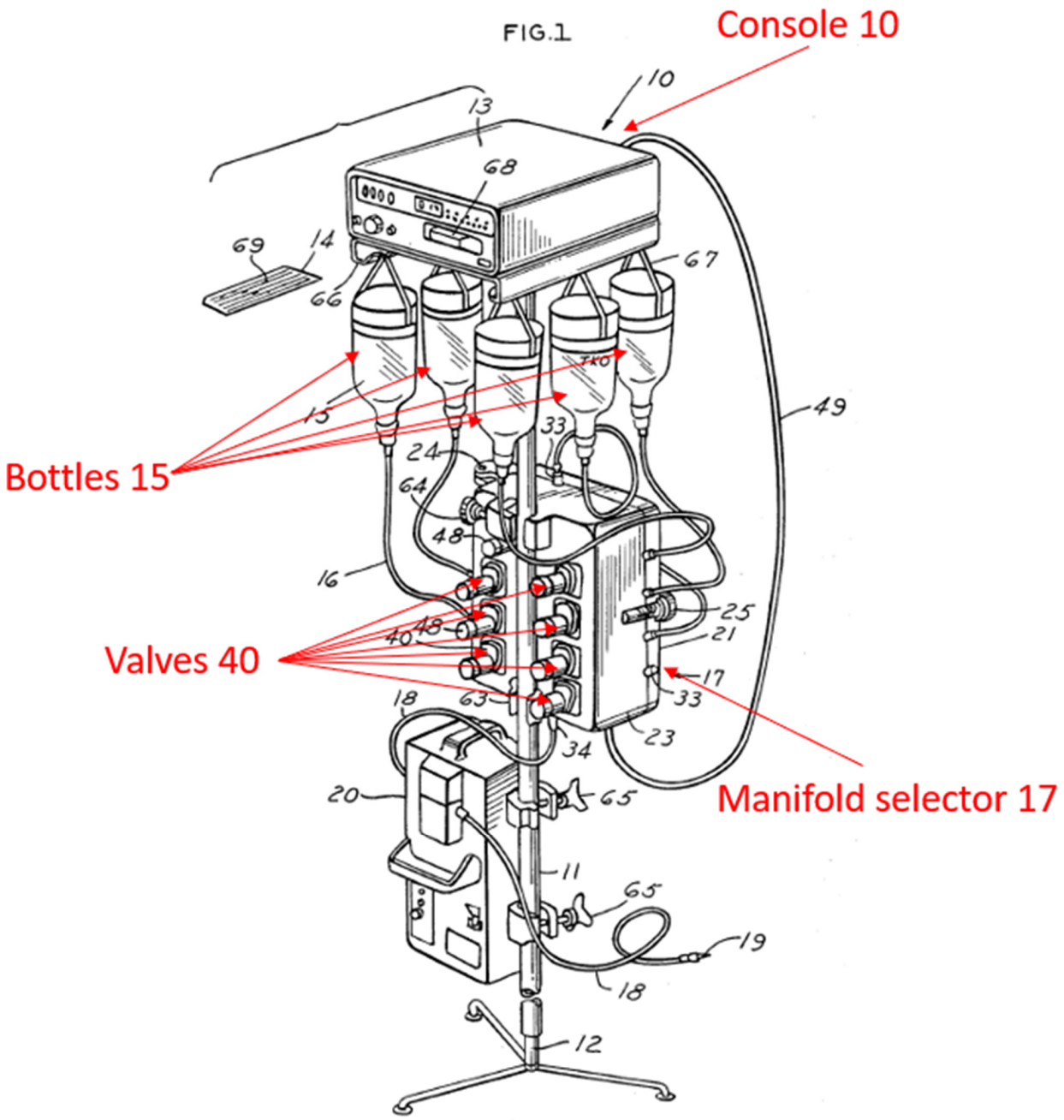

Wunsch, FIG. 1 (annotated)

85. With this motivation and knowledge, a POSITA would have investigated other references such as Palmer to achieve benefits offered by multiple treatment solutions. As a first example, a POSITA would have been

motivated to modify Karasiuk based on Palmer's multiple containers and selector means to allow easy selection among multiple treatment solutions. EUNSUNG-1005, 1:30-53, 2:48-4:2. Palmer recognizes that "[c]onventional irrigation arrangements…generally do not provide the opportunity of easy selection among several irrigant solutions." EUNSUNG-1005, 1:30-53. "If circumstances require the use of a different treatment solution, either with the same or a subsequent patient, the solution remaining in the tank is usually discarded and the tank must be cleaned and refilled with the new solution," which "is time-consuming and costly, not to mention messy." *Id.* As a solution, Palmer proposed using multiple containers and selector means to allow selection among the different treatment solutions. EUNSUNG-1005, Abstract, 2:48-4:2, claim 1, FIG. 1.

86. As a second example, the combination would enable sequential delivery of different treatment solutions. EUNSUNG-1005, 6:46-51, 11:9-12. In this regard, Palmer discloses "[w]hen treatment with the particular irrigating solution is completed, **the system can be either switched to another solution**, or the selector knob may be turned to select the flush solution." EUNSUNG-1005, 11:9-12. Palmer also discloses "**a patient may be treated with two or more solutions during the same procedure, one after the other**." EUNSUNG-1005, 6:46-51.

87. As a third example, the combination would minimize refilling

downtime because when a particular container runs out mid-operation, the combined system can quickly switch to a second container to keep the supply flowing. EUNSUNG-1011, 2:7-10. A POSITA would have been motivated to achieve each of these benefits in Karasiuk and, thus, would have found it obvious to modify Karasiuk's microdermabrasion system based on Palmer's use of multiple containers with different treatment solutions and a selector to select among the treatment solutions.

88. In addition, a POSITA would have been motivated to adopt Palmer's modular design to provide the resulting system with added flexibility, organization and portability. EUNSUNG-1005, 9:58-10:2. In this regard, Palmer discloses "[b]y providing the reservoir storage means 32 in the form of modular single-shelf racks, a high degree of flexibility is provided" and the reservoir storage means can be placed on a countertop 168 (FIG. 11A), or on a mobile cart 170 (FIG. 11B) or in a cabinet 172 underneath a counter (FIG. 11C)." EUNSUNG-1005, 9:58-10:2. A POSITA would have viewed these modular/mobile benefits of Palmer as applicable to microdermabrasion systems, like Karasiuk's, and would have been motivated to use Palmer's console design in the microdermabrasion system resulting from the combination.

89. A POSITA would have had a reasonable expectation of success in such a combination. For example, both Karasiuk and Palmer are directed to

medical devices that deliver treatment solutions to treatment sites via a handpiece. EUNSUNG-1004, Abstract, [0013]-[0015], FIG. 6; EUNSUNG-1005, Abstract, 1:10-15, FIG. 1; EUNSUNG-1006, [0003]; EUNSUNG-1001, 6:53-56. Although Palmer describes an example related to dental work, Palmer's disclosure "relates generally to methods and apparatus for delivering liquid solutions to treatment sites." EUNSUNG-1005, 1:10-11. From this disclosure, a POSITA would have understood and found it obvious that Palmer's teachings are applicable to delivering fluids for other medical procedures (e.g., microdermabrasion). By the Critical Date, fluid delivery systems and techniques were largely standardized and were used commonly across various applications without undue experimentation. For example, as evidenced in Armstrong (cited by Palmer), "[w]hile the instrument is well adapted to dental work… it also supplies a need for a general purpose medical instrument." EUNSUNG-1011, Abstract.

90. In my opinion, replacement of Karasiuk's reservoir 70 with Palmer's multiple containers and selector means reflects a simple substitution of a known element for another to obtain predictable results—allowing selection of different treatment solutions. This replacement would also reflect the use of a known technique to improve similar devices in the same way. Indeed, a working microdermabrasion system was well-known to a POSITA, which allows selection of different treatment materials by including multiple containers and a selector

valve, as evidenced in Greenberg. EUNSUNG-1006, Abstract ("A valve [(30)] controls which supply container [(18, 26)] provides the treatment particles"), FIGS. 1 and 5.

2. Claim 1

[1.pre] A system for treating skin, the system comprising:

91. It is my opinion that Karasiuk-Palmer renders obvious a system (e.g., Karasiuk's microdermabrasion system 30) for treating skin. Karasiuk, titled "Skin Treatment System and Method of Use," discloses "a microdermabrasion device, microdermabrasion system employing the device, and method of performing microdermabrasion." EUNSUNG-1004, [0014], Abstract, FIG. 6.

[1.1] a console configured to receive a first container and at least one additional container;

92. It is my opinion that Karasiuk-Palmer renders obvious a console (e.g., Palmer's mobile cart 170) configured to receive multiple containers (e.g., Palmer's reservoirs 12_1-12_6). As discussed above in Section XI.1, a POSITA would have been motivated to place Karasiuk's handpiece, waste container, filter, and vacuum source in Palmer's mobile cart 170 for increased portability and/or organization. In this regard, Palmer discloses providing the reservoir storage means in the form of a console for increased portability and/or organization. EUNSUNG-1005, 9:58-10:2, FIGS. 11A-11C. Specifically, Palmer discloses: "[b]y providing the reservoir storage means 32 in the form of modular single-shelf racks, a high degree of

flexibility is provided…the reservoir storage means 32 can be placed on a countertop 168 (FIG. 11A), or on a mobile cart 170 (FIG. 11B) or in a cabinet 172 underneath a counter (FIG. 11C)." EUNSUNG-1005, 9:63-10:2, FIGS. 11A-11C. For example, as shown in FIG. 11B, Palmer's "mobile cart" includes modular blocks including a control unit enclosure 35 and a reservoir storage means 32. EUNSUNG-1005, FIG. 11B.

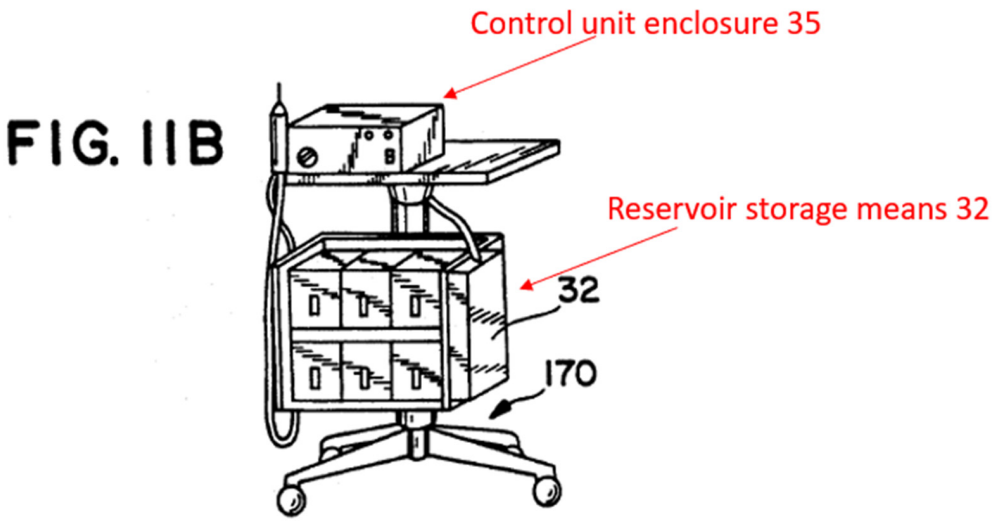

Palmer, FIG. 11B (annotated)

93. A POSITA would have understood that Palmer's various structures, such as "countertop 168 (FIG. 11A)," "mobile cart 170 (FIG. 11B)," and "cabinet 172 underneath a counter (FIG. 11C)," constitute the claimed "console." For example, a POSITA would have understood that, in the combined device, both (1) Palmer's multiple containers and selector means and (2) Karasiuk's handpiece, waste container, filter, and vacuum source are placed in Palmer's mobile cart 170

(located on four casters) to provide added portability and/or organization, as taught by Palmer. EUNSUNG-1005, FIG. 11B.

94. This aligns with the disclosure of the ’287 patent. For example, the ’287 patent discloses that console 12 contains multiple containers (EUNSUNG-1001, 14:38-48), a valve system (EUNSUNG-1001, 9:18-20, 18:38-42), a handpiece (EUNSUNG-1001, 18:46-55), a vacuum pump (EUNSUNG-1001, 11:5-6, 18:38-45), a filter 28 (EUNSUNG-1001, 6: 6-8), a waste container (EUNSUNG-1001, 7:47-48), and is placed on four casters 33 for “easy movement” (EUNSUNG-1001, 6:13-14, FIG. 1).

95. Alternatively or additionally, a POSITA would have been motivated and found it obvious to place Karasiuk-Palmer (including Palmer’s multiple containers) in a console for increased portability and/or organization. Indeed, using a console to house similar medical devices were well-known and would have been within a POSITA’s general knowledge. EUNSUNG-1010, FIGS. 2A-2G, 7A-7D, [0063] (“Console 12 houses the electrical controls for system 10, together with the motors which drive piston 20 and peristaltic pump 44.”), [0088], [0154] (“The console and power supply are mounted to a cart, generally indicated at 402 which includes wheels for easy movement and which is preferably designed to provide stability and deter tipping when used in its intended method”); EUNSUNG-1005, 9:58-10:2, FIGS. 11A-11C; EUNSUNG-1011, FIG. 2, 4:57-68, 5:55-61;

EUNSUNG-1020, Abstract, 6:18-48, 7:16-56, 8:17-26, FIGS. 1-4. Indeed, a POSITA would have viewed a console as one of a finite number of options to achieve increased portability and/or organization that would have been obvious to try. A POSITA would have had a reasonable expectation of success to place the relevant components in a console, as it would constitute the use of a known technique to improve similar devices in the same way.

96. For example, Duchon discloses a medical fluid delivery system where the user can choose the desired fluid (e.g., contrast material or saline) from multiple fluid containers (e.g., reservoir 22 or bag 50). EUNSUNG-1010, Abstract, FIG. 1, [0006]. Duchon discloses in relevant part:

> [0063] **Console 12** houses the electrical controls for system 10, together with the motors which drive piston 20 and peristaltic pump 44. On the front surface of **console 12**, user interface 55 provides control switches 56 and display 58 through which the user may enter control settings and monitor the operational state of system 10. The console can be free-standing, preferably configured for mounting on a transport cart assembly.

EUNSUNG-1010, [0063].

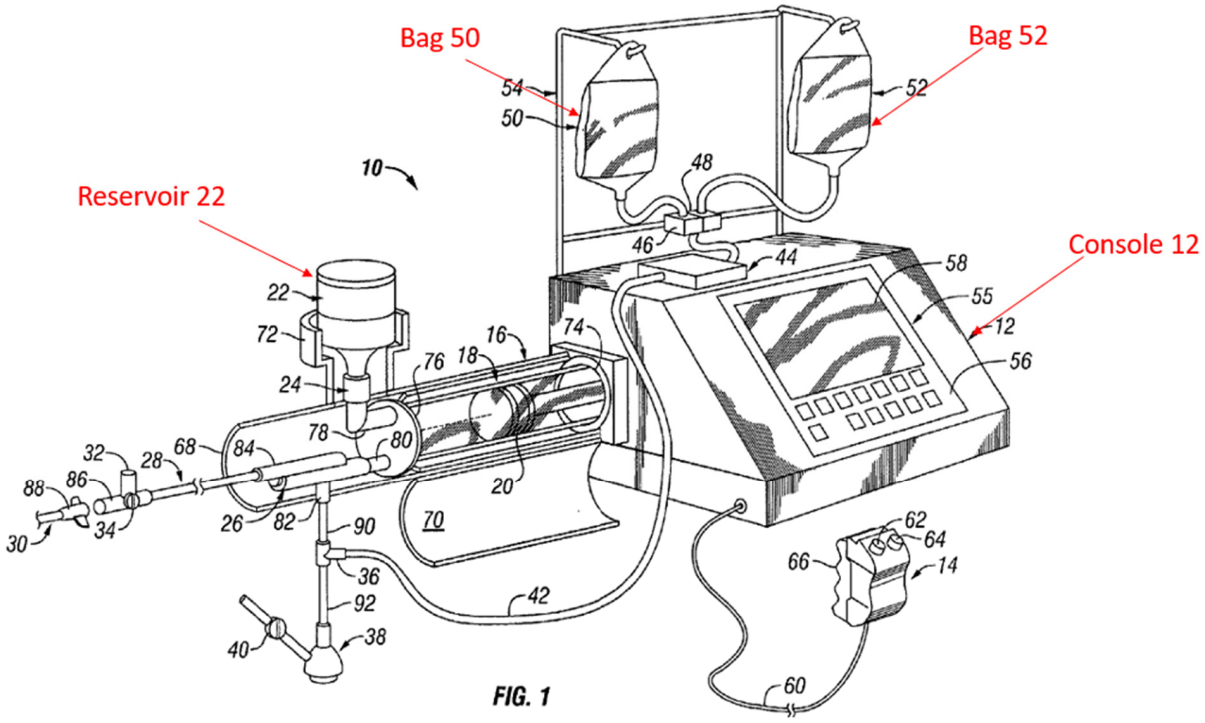

Duchon, FIG. 1 (annotated)

97. As another example, Armstrong discloses a medical fluid delivery system where the user can choose a desired fluid from several fluid containers (e.g., reservoirs 46). EUNSUNG-1011, Abstract, 2:12-15, 5:55-61, FIG. 1, FIG. 2, FIG. 7.

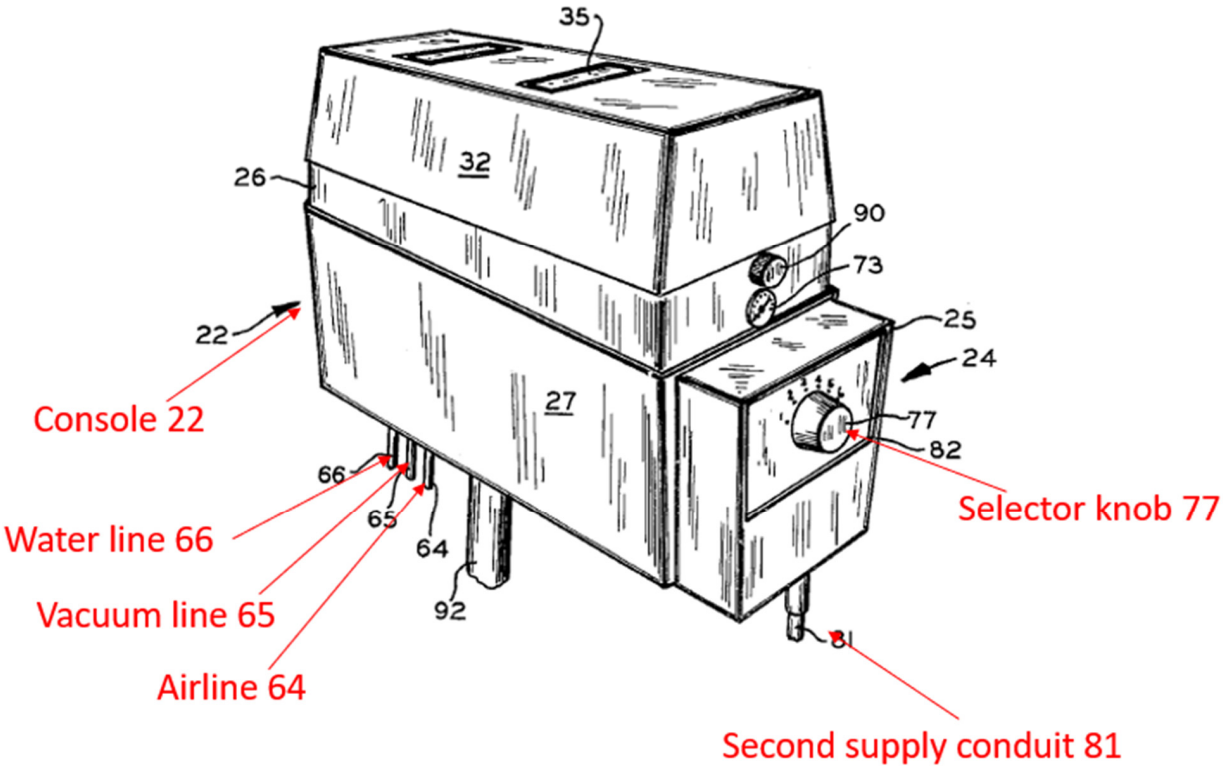

Armstrong, FIG. 2 (annotated)

98. Armstrong discloses in relevant part:

> FIG. 2 shows the system 21 of FIG. 1 with the control box 82 secured to the supply station 22. In this embodiment the supply station 22 is supported by a pedestal 92 so that, if desired, the entire system 21 may be placed next to the patient treatment area. This embodiment is typically used in a dental care center as opposed to a surgical theater usage.

EUNSUNG-1011, 5:55-61.

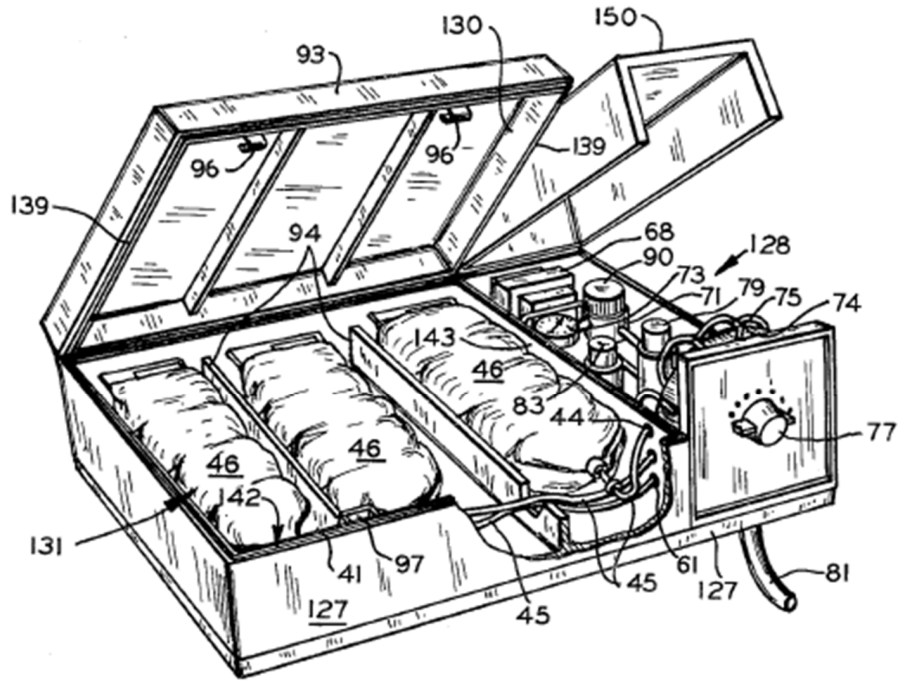

FIG. 7

EUNSUNG-1011, FIG. 7

99. As another example, Wunsch discloses an apparatus (e.g., console 10) for sequentially dispensing a plurality of solutions through a manifold that is connected to each of the solutions to be administered. EUNSUNG-1020, Abstract, 7:39-56, 8:17-26, FIGS. 1-4. As shown in FIG. 1, the manifold selector 17 includes a plurality of valves 40, which control the flow of solution from the plurality of bottles 15. EUNSUNG-1020, 6:18-48, 7:16-56. In operation, the user can program the sequencer timer 13 to automatically operate the valves 40 to achieve automatic switching between different solutions and sequential delivery of different solutions. EUNSUNG-1020, 9:36-10:64.

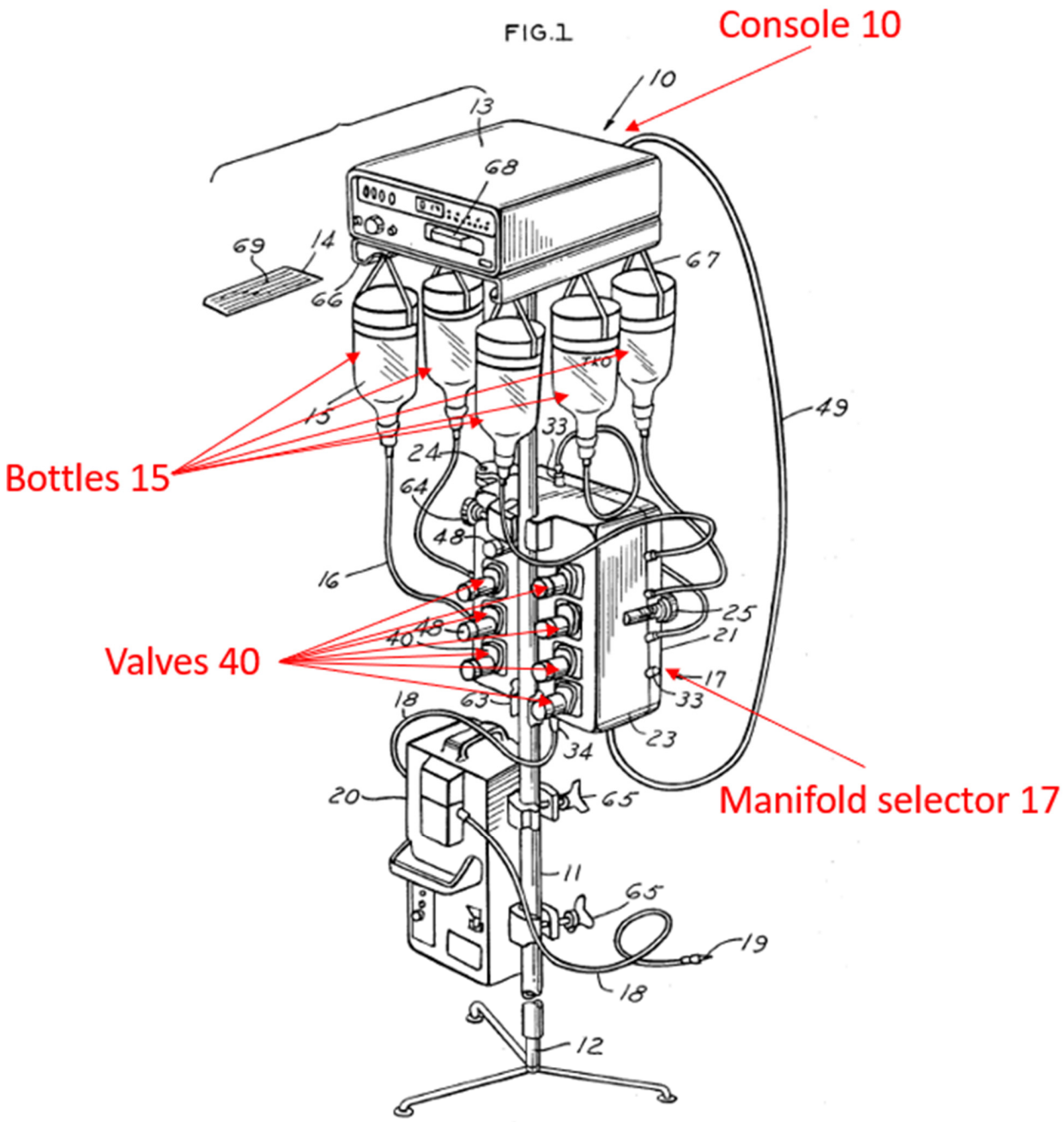

Wunsch, FIG. 1 (annotated)

100. Further, as I discussed in Section XI.1, Karasiuk-Palmer describes six solution reservoirs in the modular structure (***console***), which would have been understood as ***first and at least one additional containers*** received at the console.

Thus, Karasiuk-Palmer renders obvious a console (e.g., mobile cart 170) configured to receive a first container (e.g., solution reservoir 12_1) and at least one additional container (e.g., solution reservoir 12_2), as taught by Palmer. EUNSUNG-1005, FIGS. 2, 4, 11B.

[1.2] a handpiece configured to contact skin tissue of a subject; and

101. It is my opinion that the Karasiuk-Palmer combination renders obvious a handpiece (e.g., Karasiuk's device 10) configured to contact skin tissue of a subject. For example, Karasiuk's "[d]evice 10 is designed to be **handheld by a user** for its application to the skin of a patient in the performance of microdermabrasion or other vacuum therapy application." EUNSUNG-1004, [0044] ("an elongated handle 12 to facilitate grasping by a user"), [0045] ("Cannula 16 runs through the center of the handpiece"). Karasiuk's "treatment tip 20 is fitted over the end of vacuum head base 18" and "is smooth surfaced and adapted to glide over the skin surface for application of lotions/vitamins or other fluids thereto during processing." EUNSUNG-1004, [0047]. Karasiuk also discloses "device 10 is positioned so as to place tip 20 **in contact with the skin surface**." EUNSUNG-1004, [0063].

102. Karasiuk discloses: "Upon forming the vacuum loop as described above, the fluid contents in fluid reservoir 70 are drawn through tube 14 and into device 10 where they flow out of the cannula 16 through openings 16d and are

applied to the skin." EUNSUNG-1004, [0064], FIGS. 1A-1B. Karasiuk further illustrates the structure of hand-held device 10 in FIGS. 1A-1B.

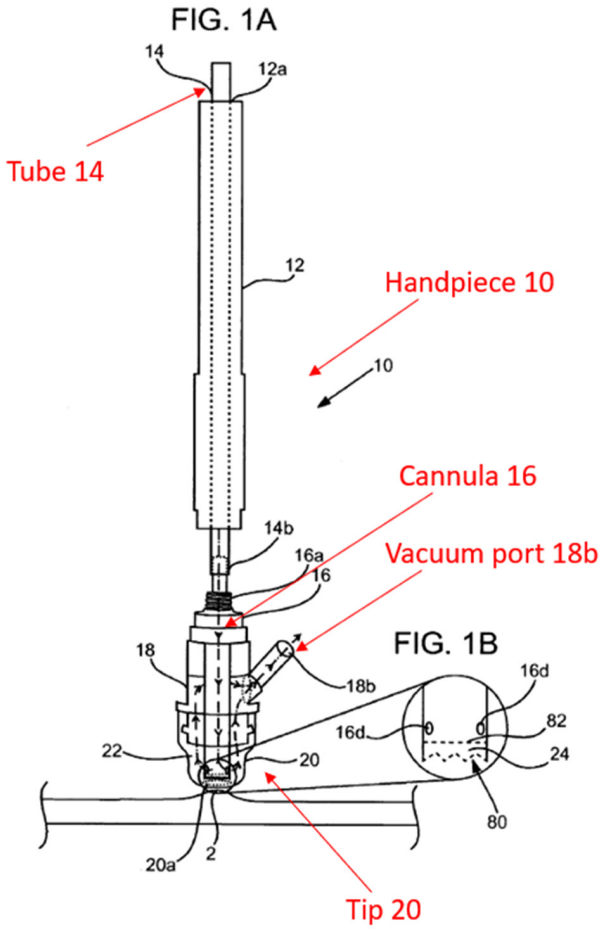

Karasiuk, FIGS. 1A-1B (annotated)

103. Similarly, Palmer describes "**handpiece means 14** for delivering a selected one of the liquid solutions contained in one of the reservoirs 12 directly to a treatment site." EUNSUNG-1005, 4:57-60. Palmer illustrates this handpiece means 14 in FIG. 1. EUNSUNG-1005, 4:50-68, FIG. 1.

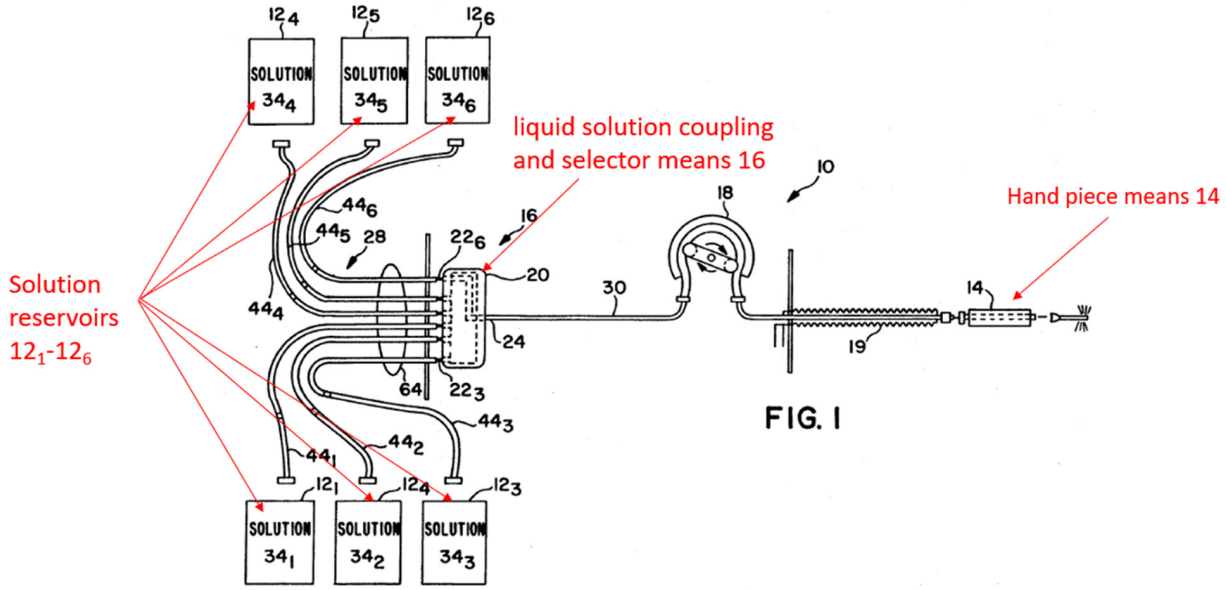

Palmer, FIG. 1 (annotated)

104. Thus, the Karasiuk-Palmer combination renders obvious a handpiece configured to contact skin tissue of a subject.

[1.3] a block in the console, wherein the block is: configured to selectively receive fluid from the first container when the first container is connected to the console; configured to selectively receive fluid from the at least one additional container when the at least one additional container is connected to the console; and, configured to selectively be in fluid communication with the handpiece through a first conduit when the handpiece is connected to the console;

105. As I discussed with respect to [1.1], Karasiuk-Palmer's solution reservoirs (***first*** and ***at least one additional containers***) and handheld device 10 (***handpiece***) are connected to its modular structure (e.g., "mobile cart 170") (***console***). It is my opinion that Karasiuk-Palmer describes a block (e.g., Palmer's liquid solution coupling and selector means 16, selector valve means 20, or control unit enclosure 35) in the console (e.g., Palmer's mobile cart 170), wherein the

block is: configured to selectively receive fluid from the first container (e.g., Palmer's reservoir 12_1) when the first container is connected to the console; configured to selectively receive fluid from the at least one additional container (e.g., Palmer's reservoir 12_2) when the at least one additional container is connected to the console; and, configured to selectively be in fluid communication with the handpiece (e.g., Karasiuk's device 10) through a first conduit (e.g., Karasiuk's tube 14 or collectively Palmer's second tubing means 30, Karasiuk's T joint 76' and Karasiuk's tube 14) when the handpiece is connected to the console. As discussed in Section XI.1, the Karasiuk-Palmer system would have used a selector, such as Palmer's "liquid solution coupling and selector means," for selectively receiving fluid from each of the multiple containers and selectively communicating with the handpiece in the resulting system. In particular, Palmer describes "liquid solution coupling and selector means, generally designated 16, for coupling handpiece means 14 to a selected one of the liquid solutions in a respective solution reservoir 12." EUNSUNG-1005, 4:60-63. Palmer's "liquid solution coupling and selector means 16 include[s] selector valve means 20 having a plurality of inputs 22, an output 24, and means for coupling a selected one of the inputs 22 to the output 24." *Id.*, 5:1-9. It also includes "first tubing means 28 for fluidly coupling each of the solutions in a respective reservoir 12 to a respective one of the inputs 22 of the selector valve inputs 22, and second tubing

means 30 for fluidly coupling the output 24 of the selector valve means to the handpiece means 14." *Id.*

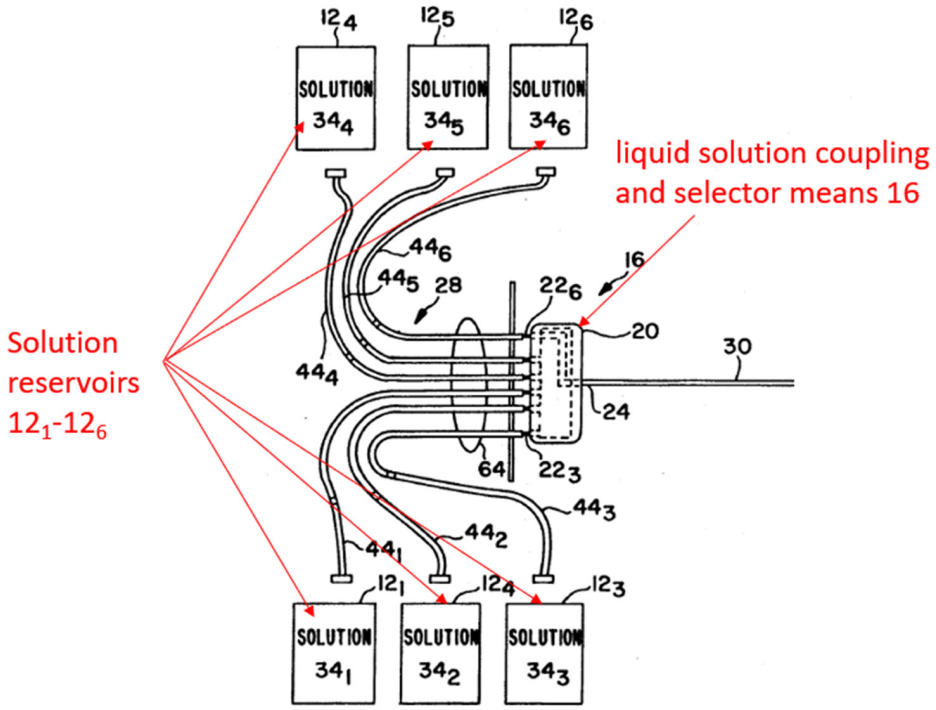

Palmer, FIG. 1 (annotated and shown in part)

106. Therefore, a POSITA would have understood and found obvious that the "liquid solution coupling and selector means" in the Karasiuk-Palmer combination performs the operations of the "block" recited in [1.3]. The '287 patent's specification is silent as to the term "block" while it allegedly describes a "manifold" or "manifold system" as performing similar functionalities. EUNSUNG-1001, 5:28-30 ("manifold system 24 can control the flow of treatment material from containers 26 into and through the line 20."), Abstract ("the manifold is configured to hold releasably a plurality of fluid sources and deliver

fluid from at least one of the plurality of fluid sources to the handpiece assembly"). In fact, other patents of the '287 patent's family expressly recites the term "manifold" for similar limitations in the claims. *See* EUNSUNG-1017, claim 1; EUNSUNG-1018, claim 1. In the '287 patent, Patent Owner used the term "block" in an apparent attempt to broaden the scope of protection. EUNSUNG-1001, claim 1.

107. In the Karasiuk-Palmer combination, a POSITA would have understood and found obvious that any one or more of (1) Palmer's selector valve 20, (2) Palmer's liquid solution coupling and selector means 16, and (3) Palmer's control unit enclosure 35 constitute a "block." As shown in FIG. 4, these three components are (1) configured to selectively receive fluid from the first container (e.g., Palmer's reservoir 12_1) when the first container is connected to the console, (2) configured to selectively receive fluid from the at least one additional container (e.g., Palmer's reservoir 12_2) when the at least one additional container is connected to the console, and (3) configured to selectively be in fluid communication with the handpiece (e.g., Karasiuk's device 10) through a first conduit (e.g., Karasiuk's tube 14 or collectively Palmer's second tubing means 30, Karasiuk's T joint 76' and Karasiuk's tube 14) when the handpiece is connected to the console (e.g., Palmer's mobile cart 170). In particular, Palmer's liquid solution coupling and selector means 16 is configured to deliver fluid from one of the

plurality of fluid sources to the handpiece. EUNSUNG-1005, 5:1-18. Specifically, FIG. 4 of Palmer shows an exploded view of control unit enclosure 35 which contains first tubing means 28, **selector valve means 20** (connected via valve inputs 22_1-22_6 to solution reservoirs 12_1-12_6), and selector knob 78. EUNSUNG-1005, 8:22-9:16, FIG. 4.

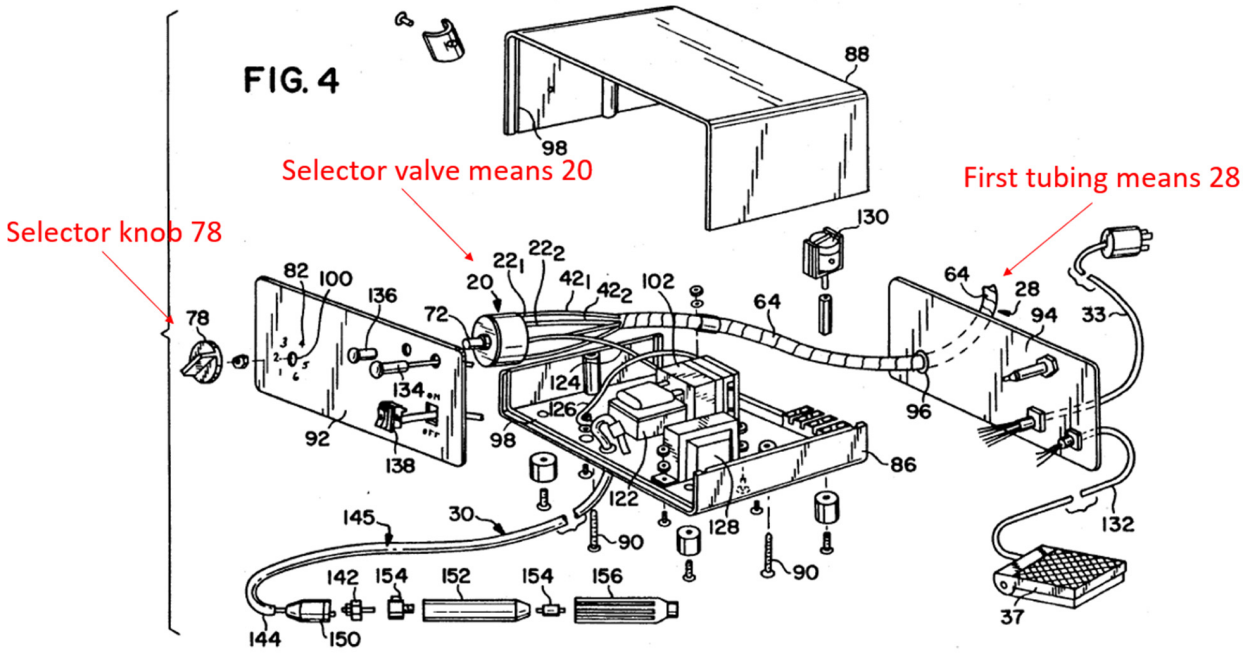

Palmer, FIG. 4 (annotated)

108. Palmer illustrates an exemplary selector valve means 20 in FIGS. 5A-5C.

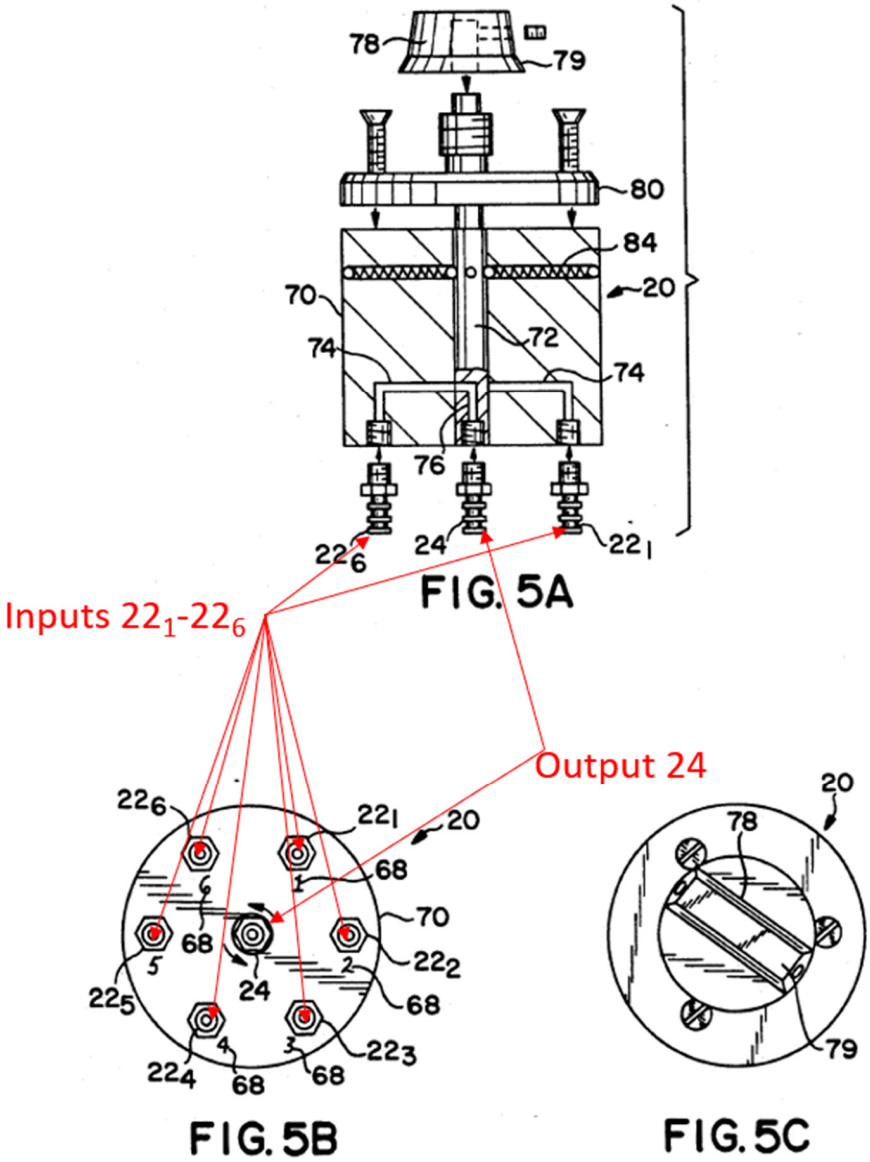

Palmer, FIGS. 5A-5C (annotated)

109. As illustrated in FIGS. 5A-5B, the selector valve means 20 includes a main body 70 that defines multiple "liquid inlet passages 74" with multiple "input port[s] 22" and a "liquid outlet passage 76" with a "selector valve output port 24." EUNSUNG-1005, 8:6-21. Further, the main body 70 defines a "bore which receives the rotatable core 72 in a plane common with the inner ends of the other

inlet passages 74." *Id.* The "liquid outlet passage 76 is formed in the rotatable core 72 having one end opening into the selector valve output port 24 and another end opening onto the cylindrical core surface in the plane of the inner ends of passages." *Id.* The structure of any one or more of (1) Palmer's selector valve 20, (2) Palmer's liquid solution coupling and selector means 16, and (3) Palmer's control unit enclosure 35 correspond to the "manifold" described in the '287 patent.

110. Alternatively, to the extent Patent Owner argues that the claimed "block" requires the use of a manifold and that Palmer's structure does not comprise a manifold, I assert that Palmer's selector valve means comprises a manifold within the valve body: Multiple liquid inlet passages 74 are connected to a liquid outlet passage 76. This arrangement is by classic definition a manifold. Further, a POSITA would have found it obvious to use a manifold to implement the functionality of switching treatment fluids described by Palmer. Manifolds and their variants are foundational constructs within the art of fluidics and were well-known devices for selecting between or differentially combining different fluids and would have been within a POSITA's general knowledge. Manifolded rotational and linear valve/switch components were common before the Critical Date. EUNSUNG-1010, FIGS. 2A-2G, 7A-7D, [0086] ("Manifold 26 contains a valve which controls the routing of fluid connections between patient port 84 and

either syringe bottom port 80 or transducer/saline port 82."), [0088]; EUNSUNG-1019, Abstract, 6:43-45 ("The ports, valves and conduits of the manifold may be configured in any manner that permits the desired flow of fluid through the manifold"), 10:30-44, FIGS. 7-10; EUNSUNG-1020, Abstract ("Apparatus for sequentially dispensing a plurality of solutions through an intravenous supply catheter includes a disposable tubing manifold…"), 7:39-56, 8:17-26, FIGS. 1-4; EUNSUNG-1021, Abstract, 4:57-65, FIG. 1; EUNSUNG-1022, Abstract, FIGS. 1-4. Based on this general knowledge, a POSITA would have found it obvious to implement Palmer's functionality using a manifold because manifolds were known to provide the combining function required, wherein multiple supply lines are combined (and may be valved) and connected to a single fluid output, as described by Palmer. Indeed, a POSITA would have viewed a manifold as one of a finite number of options to achieve the functionality described by Palmer that would have been obvious to try. The '287 patent did not invent a manifold (nor did it invent the analogous block or more commonly known as a fluidic block) and, based on a POSITA's general knowledge, a POSITA would have found it obvious to implement Palmer's functionality using a manifold, as it would have merely involved a simple substitution of one well-known element for another to obtain predictable results. For similar reasons, a POSITA would have had a reasonable expectation of success to implement Palmer's switching between different fluids

and providing a single fluid output using a manifold.

111. For example, Wunsch discloses an apparatus (e.g., console 10) for sequentially dispensing a plurality of solutions through a manifold (e.g., manifold selector 17) that is connected to each of the solutions to be administered. EUNSUNG-1020, Abstract, 7:39-56, 8:17-26, FIGS. 1-4. As shown in FIG. 1, the manifold selector 17 includes a plurality of valves 40, which control the flow of solution from the plurality of bottles 15. EUNSUNG-1020, 6:18-48, 7:16-56. In operation, the user can program the sequencer timer 13 to automatically operate the valves 40 to achieve automatic switching between different solutions and sequential delivery of different solutions. EUNSUNG-1020, 9:36-10:64.

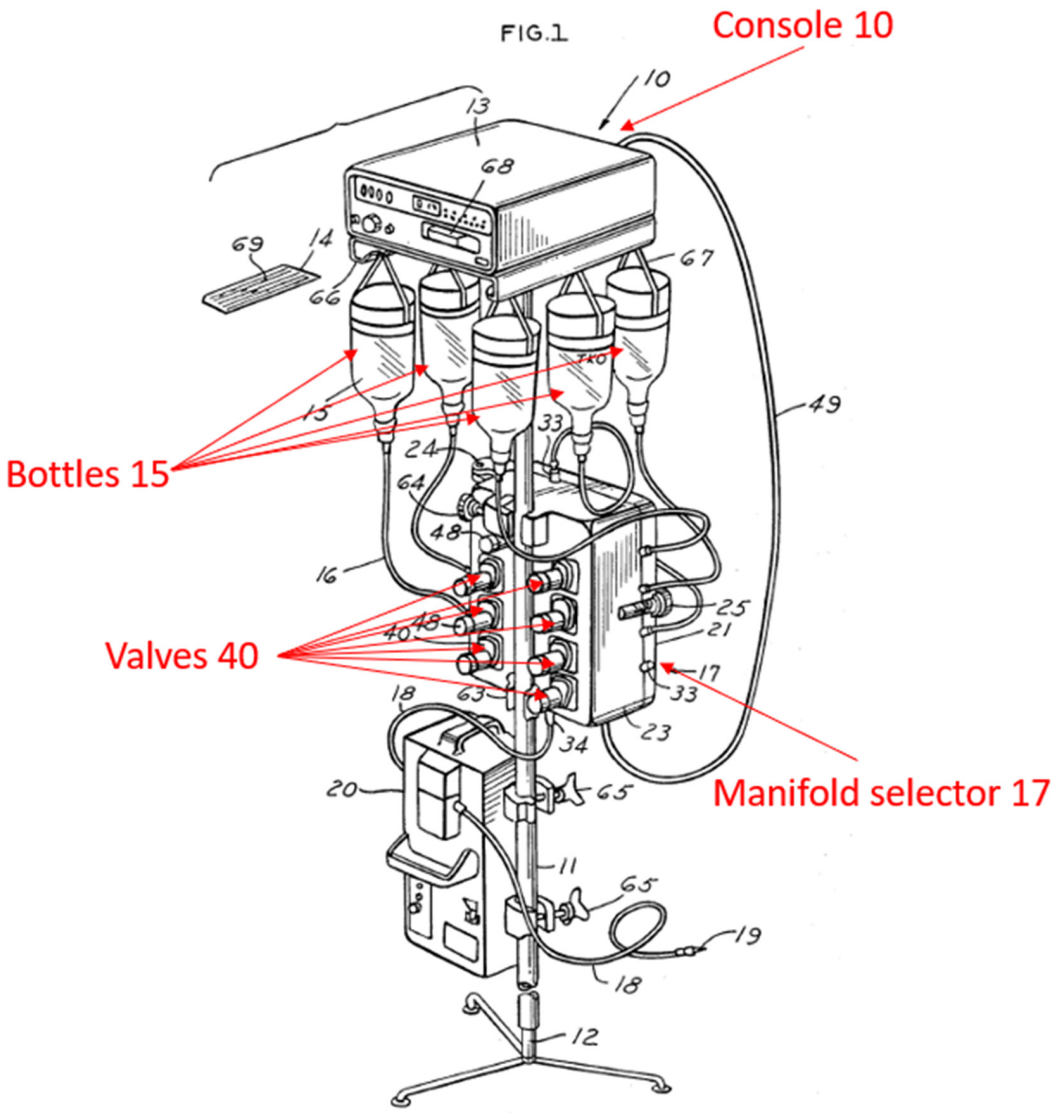

Wunsch, FIG. 1 (annotated)

112. To the extent that Patent Owner alleges that the term "block" requires a certain structure such as a rectangular shaped enclosure or a fluidic block, it is my opinion that a POSITA would have understood the claim language do not require such a structure. As discussed above, the specification of the '287 patent never used the term "block" and instead only describes a "manifold" (e.g.,

manifold system 24) that controls the flow of treatment material from the containers to the handpiece. EUNSUNG-1001, 5:28-31 ("A manifold system 24 can control the flow of treatment material from containers 26 into and through the line 20"), 6:21-37, 17:17-18:18. The '287 patent does not specify that this "manifold" has any particular structure and does not ascribe any benefits to a particular structure (e.g., a rectangular shaped enclosure). Even if the term "block" is interpreted to require a particular structure (e.g., a rectangular shaped enclosure), it is my opinion that such a structure is an obvious design choice in view of the knowledge of POSITA. A POSITA would have known that many similar prior art fluid delivery systems have a manifold with a similar structure (e.g., a rectangular shaped enclosure). EUNSUNG-1020, FIG. 1 (showing a rectangular manifold selector 17); EUNSUNG-1011, FIG. 1 and FIG. 2 (showing a rectangular control station 25); EUNSUNG-1005, FIG. 11B and FIG. 4 (showing a rectangular control unit enclosure 35); EUNSUNG-1006, FIG. 5 (showing a rectangular valve 108). Thus, it is my opinion that Karasiuk-Palmer renders this limitation obvious.

113. Lastly, in the Karasiuk-Palmer combination, it would have been obvious to locate Palmer's block (e.g., Palmer's selector valve 20, liquid solution coupling and selector means 16, and/or control unit enclosure 35) in Palmer's mobile cart 170. As discussed above regarding [1.1], Palmer's control unit enclosure 35 is included in the "mobile cart 170" (***console***). EUNSUNG-1005,

9:58-10:16, FIG. 11B (below). In the Karasiuk-Palmer's system, a POSITA would have found it obvious that the handpiece (e.g., Karasiuk's device 10) is connected to the "mobile cart 170" (***console***). EUNSUNG-1005, FIG. 11B.

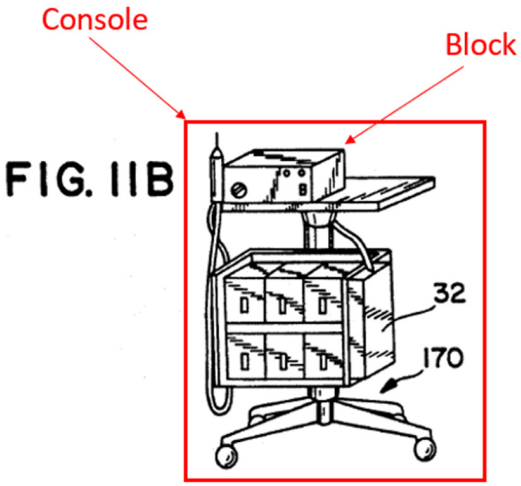

Palmer, FIG. 11B (annotated)

114. Palmer's "control unit enclosure 35 houses the pump and selector valve means," which includes Palmer's "liquid solution coupling and selector means." EUNSUNG-1005, 5:13-14, 4:53-68, 8:22-9:16. Thus, a POSITA would have understood that all of (1) Palmer's selector valve 20, (2) Palmer's liquid solution coupling and selector means 16, and (3) Palmer's control unit enclosure 35 are included in the console (e.g., Palmer's mobile cart 170). In Karasiuk-Palmer's system, a POSITA would have found it obvious that the handpiece (e.g., Karasiuk's device 10) is connected to "mobile cart 170" (***console***). EUNSUNG-1005, FIG. 11B.

115. Thus, the Karasiuk-Palmer combination renders obvious a block (e.g.,

Palmer's selector valve 20, liquid solution coupling and selector means 16, and/or control unit enclosure 35) in the console, wherein the block is: configured to selectively receive fluid from the first container (e.g., solution reservoir 12_1) when the first container is connected to the console; configured to selectively receive fluid from the at least one additional container (e.g., solution reservoir 12_2) when the at least one additional container is connected to the console; and, configured to selectively be in fluid communication with the handpiece through a first conduit (e.g., Karasiuk's tube 14 or collectively Palmer's second tubing means 30, Karasiuk's T joint 76' and Karasiuk's tube 14) when the handpiece is connected to the console.

[1.4] a vacuum source, wherein the console comprises the vacuum source; and

116. It is my opinion that Karasiuk-Palmer renders obvious a vacuum source (e.g., Karasiuk's vacuum source 40), wherein the console (e.g., Palmer's mobile cart 170) comprises the vacuum source. The Karasiuk-Palmer system includes "a vacuum source 40," as taught by Karasiuk. EUNSUNG-1004, [0056]; As discussed above in Section XI.1, in the Karasiuk-Palmer combination, a POSITA would have been motivated to use Karasiuk's vacuum source to pump the treatment fluids and remove waste/debris as originally intended in Karasiuk, in part because Karasiuk's vacuum source can perform the dual function of (1) pumping the treatment fluid to the treatment area, and (2) removing waste/debris from the

treatment area.

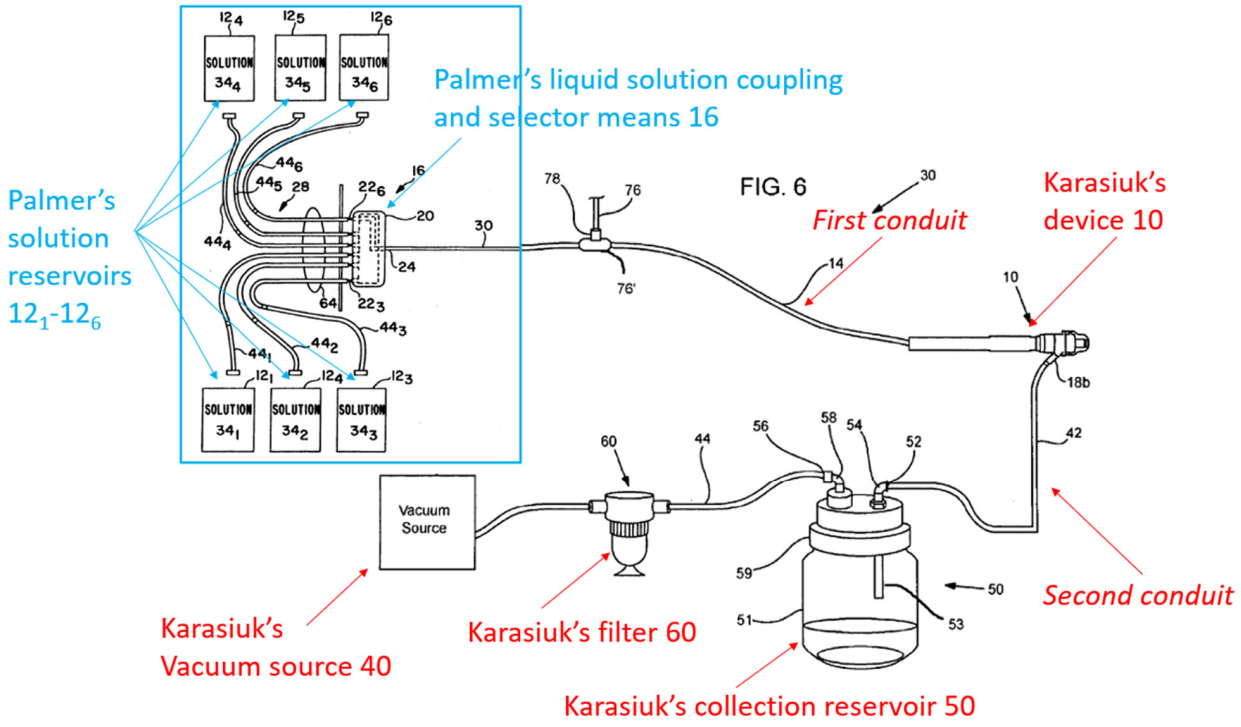

Modified FIG. 6 of Karasiuk (annotated)

117. Further, as discussed in Section XI.1, a POSITA would have been motivated and found it obvious to include the vacuum source in the console (e.g., Palmer's mobile cart 170) for increased portability and/or organization. *See* element [1.1]. Indeed, placing the vacuum source in a console was nothing novel. EUNSUNG-1006, FIGS. 1 and 2 (showing a vacuum source in "apparatus 10").

[1.5] wherein the handpiece is configured to be in fluid communication with the vacuum source through a second conduit when the handpiece is connected to the console;

118. It is my opinion that Karasiuk-Palmer renders obvious that the handpiece (e.g., Karasiuk's device 10) is configured to be in fluid communication

with the vacuum source (e.g., Karasiuk's vacuum source 40) through a second conduit (e.g., collectively, Karasiuk's vacuum line 42, second vacuum line 44, and vacuum line 46) when the handpiece is connected to the console (e.g., Palmer's mobile cart 170). This is because Karasiuk's vacuum pump is designed to remove waste/debris generated by microdermabrasion from the handpiece. EUNSUNG-1004, [0056], [0066]. In the Karasiuk-Palmer system, Karasiuk's handpiece includes "[v]acuum opening 18b" that is in fluid communication with the "vacuum source 40" through the "vacuum line between device 10 and vacuum source 40" (e.g., collectively vacuum line 42, second vacuum line 44, vacuum line 46) (respectively or collectively a ***second conduit***) when the handpiece is connected to Palmer's "liquid solution coupling and selector means 16" arranged at the "mobile cart 170" (collectively ***console***; *see* element [1.1]). EUNSUNG-1004, [0056], FIG. 6; EUNSUNG-1005, 4:50-68, 9:58-10:2, FIG. 1, FIG. 11B.

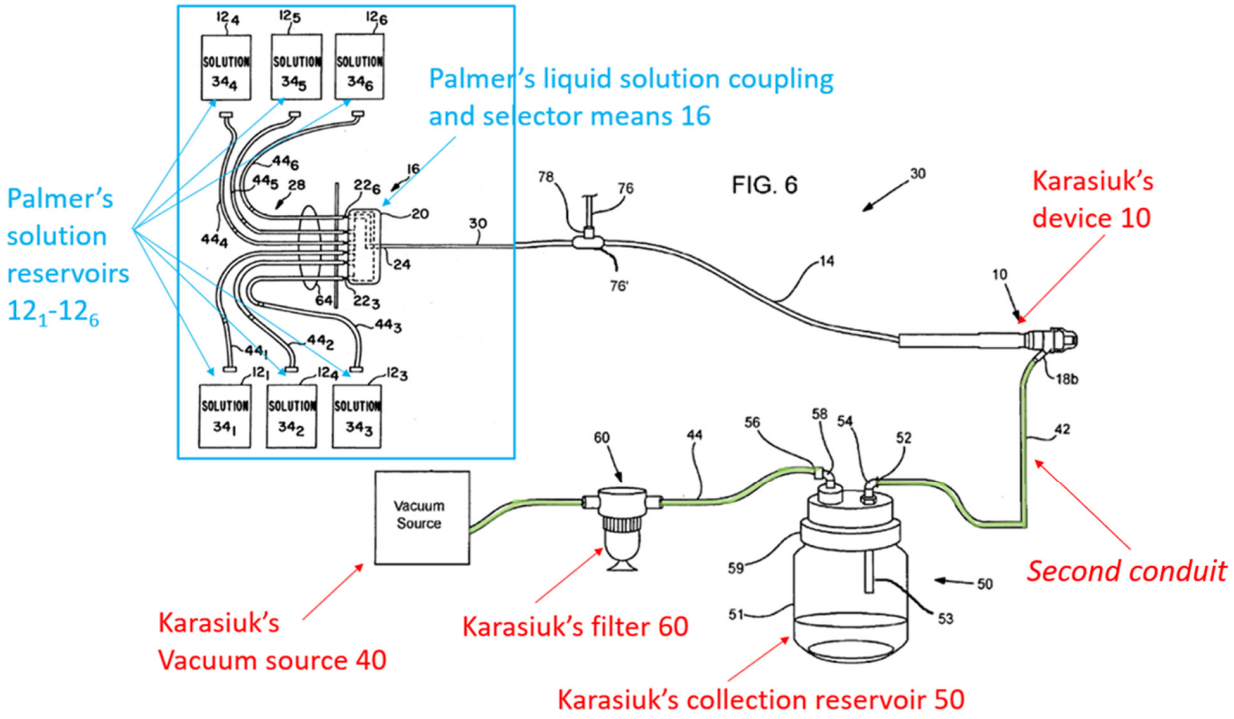

Modified FIG. 6 of Karasiuk (annotated)

119. Karasiuk discloses in relevant part:

> [0056] FIG. 6 shows an example of a microdermabrasion system 30 according to the present invention, which incorporates device 10 or 10' (though only device 10 is shown). Vacuum opening 18b is connected with a vacuum source 40 as described above, by vacuum line 42. **A collection reservoir 50 and, optionally, an inline filter 60 are connected in the vacuum line between device 10 and vacuum source 40**. Vacuum line 42 connects to an input 52 to collection reservoir 50 via elbow 54, for example, and output 56 connects with a second vacuum line 44 via elbow 58, for example. A manifold cover 59 sealably interfaces the input (52,54) and output (56,58) connections with a reservoir 51 which is typically a jar made of glass or plastic for example. **An extension tube 53 connects with input 52,54 and extends into the reservoir 51 to ensure effective delivery of waste materials (abraded skin particles and, optionally, fluids) to reservoir 51.**

EUNSUNG-1004, [0056].

120. Karasiuk further discloses in relevant part:

> Upon forming the vacuum loop as described above, the fluid contents in fluid reservoir 70 are drawn through tube 14 and into device 10 where they flow out of the cannula 16 through openings 16d and are applied to the skin. A targeted area of the skin (which is defined by the perimeter of the opening 20a is drawn up into the tip 20 and a central portion of the targeted area of skin is drawn into contact with abrasive member 24, while portions of the targeted area surrounding the central portion are treated with the fluid contents. As the user or operator of the device 10 glides the tip 20 over the surface of the skin, the targeted area in contact with the abrasive surface 24 is scraped over the abrasive surface wherein microdermabrasion of that portion of the skin is performed. Continued movement of the tip over the skin likewise continues the microdermabrasion of the targeted area, which changes along with the movement of the tip.
> …
> **As the flow of the fluids continues out of the vacuum head base and into vacuum line 42, it carries with it the exfoliated skin particles and any other waste that is removed through the microdermabrasion process**. Since the fluids surround the abrasive member 24, they are very effective in taking up substantially all of the particles that are loosened during the microdermabrasion process, in contrast with prior art mechanisms having a abrasive tip that can only vacuum up particles from the leading portion of the tip (through a central opening through the abrasive tip), while all of the particles that are loosened or freed up by the trailing side of such a tip (i.e., that portion of the abrasive tip that is behind the central opening with respect to the direction of movement over the skin) are left behind.

EUNSUNG-1004, [0064]-[0066].

121. As discussed above in [1.3], Karasiuk's ***handpiece*** is connected to the ***console*** ([1.1]). Further, as discussed in [1.4] above, Karasiuk's "vacuum source

40" is used to pump the treatment fluids and remove waste/debris. Thus, as shown in modified FIG. 6 of Karasiuk, a POSITA would have understood and found obvious that Karasiuk's "vacuum source 40" is fluidly connected to Karasiuk's collection reservoir 50, which is ***in fluid communication with*** Karasiuk's vacuum source 40. Therefore, Karasiuk's device 10 (***handpiece***) is ***in fluid communication with*** Karasiuk's vacuum source 40 via Karasiuk's collection reservoir 50.

[1.6] wherein when the handpiece, the first container, the at least one additional container and a waste container are each connected to the console, the first container contains a first treatment fluid, and the at least one additional container contains an additional treatment fluid,

122. It is my opinion that Karasiuk-Palmer renders obvious that when the handpiece (e.g., Karasiuk's device 10), the first container (e.g., Palmer's reservoir 12_1), the at least one additional container (e.g., Palmer's reservoir 12_6) and a waste container (e.g., Karasiuk's collection reservoir 50) are each connected to the console (e.g., Palmer's mobile cart 170), the first container contains a first treatment fluid (e.g., Karasiuk's vitamin), and the at least one additional container contains an additional treatment fluid (e.g., Karasiuk's lotion). As discussed above in Section XI.1, the Karasiuk-Palmer system replaces Karasiuk's reservoir 70 with Palmer's multiple reservoirs and "liquid solution coupling and selector means 16" to thereby allow selection of different treatment solutions. As discussed in [1.3], in the resulting system, Karasiuk's handpiece and Palmer's reservoirs (***first and at least one additional containers***) are each connected to Palmer's "liquid solution

coupling and selector means 16" arranged at the "mobile cart 170" (collectively ***console***; *see* element [1.1]).

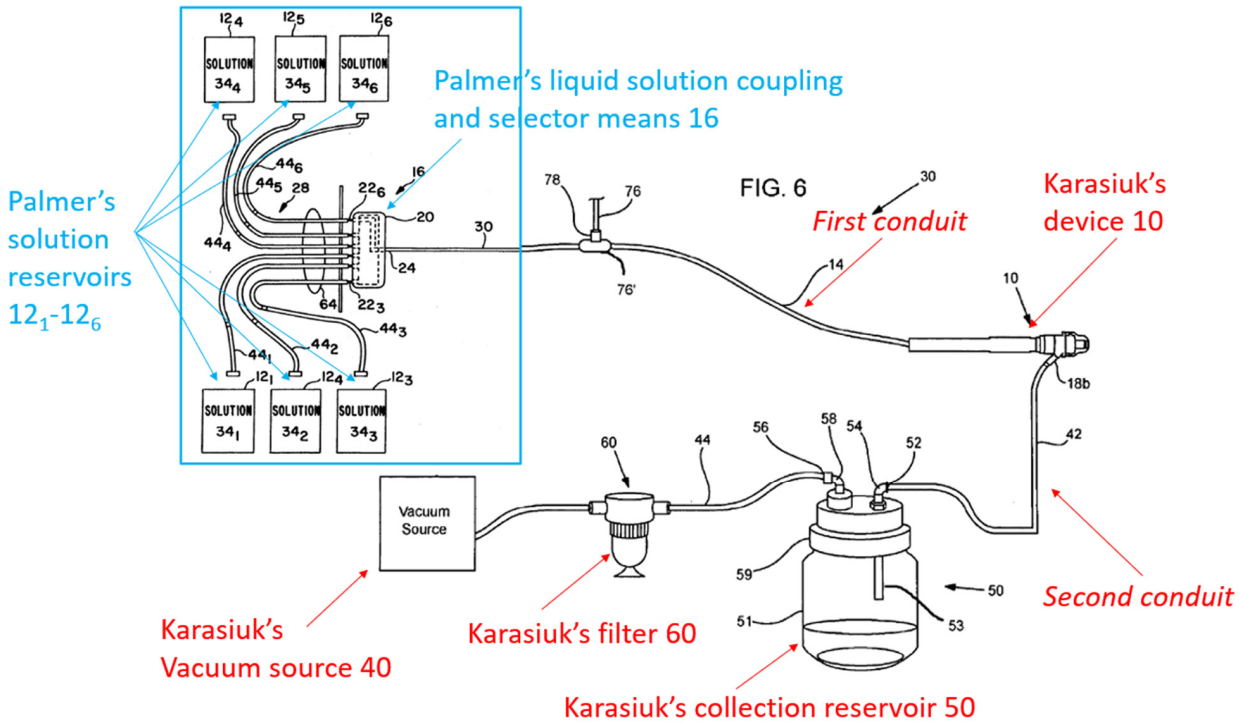

Modified FIG. 6 of Karasiuk (annotated)

123. Further, as discussed in [1.5], Karasiuk describes "collection reservoir 50" (including "reservoir 51") (***waste container***) for receiving "waste materials (abraded skin particles, and optionally, fluids)" that is "removed through the microdermabrasion process." EUNSUNG-1004, [0056], [0064]-[0066]. As shown in modified FIG. 6 of Karasiuk (above), the "reservoir 51" is connected to the "opening or port 18b" of the handpiece via the "vacuum line 42," and the handpiece is connected to Palmer's "liquid solution coupling and selector means 16" (part of the ***console***; *see* element [1.1]) via the "tube 14." EUNSUNG-1004,

[0056]. As such, Karasiuk's reservoir 51 (***waste container***) is connected to the ***console*** in the Karasiuk-Palmer system. Further, in the resulting system, Karasiuk's collection reservoir would have been placed in Palmer's modular structure (e.g., "mobile cart") for similar reasons discussed above for the Karasiuk-Palmer combination.

124. In addition, Palmer's reservoirs each include "a quantity of a respective liquid solution substantially sealed within a container." EUNSUNG-1005, 4:53-57. Palmer also discloses using color-coding to distinguish a first treatment solution in a first container from a second treatment solution in a second container. EUNSUNG-1005, 5:37-6:32 (explaining that the six containers may contain, respectively, an aqueous bacteriostatic rinse solution, a 1% zinc chloride solution, a 2% sodium fluoride solution, a 1.64% stannous fluoride gel, a 0.12% chlorhexidine gluconate, and a 1.7% hydrogen peroxide solution).

125. Karasiuk also recognizes the desirability of using multiple types of skin treatment solutions during microdermabrasion. EUNSUNG-1004, [0024], [0047] ("application of lotions/vitamins or other fluids"), [0061] (listing various treatment solutions). Specifically, Karasiuk discloses:

> Reservoir 70 may contain solution or a suspension for purposes other than abrasion or pure abrasiveness. General examples, types and/or categories of compounds that may be employed include: beaching formulations (e.g., 2-4% hydroquinone, 2% Kojic Acid, 1% Vitamin K, and 1% Hydrocortisone in a aqueous base); acne treatment formulations (e.g., Salycilic Acid, alcohol

> base buffered by witch hazel, etc.).fine lines/wrinkle treatment formulations (e.g.,: Hyaluronic acid is an aqueous base); hydrating formulations (e.g., Calendula, vitamins A, D and/or E in a mineral oil base); antioxidant formulations/free radical; scavengers (e.g., vitamins A, E and K in a mineral oil base). Other examples of product categories that may be employed alone or in combination with other compounds include, antiseptics, astringents, cleansers, pore decongestants, balms, botanicals, collagen stimulators, herbs, microemulsifiers, oxygen delivery vehicles, proteins, serums, skin firming agents, toners, topical anesthetics, and tyrosinase inhibitors. Individually named products as may be used (with associated benefit indicated parenthetically) include: Aloe Vera (calming); alpha hydroxy acids (peel); alphalipoic acid (antioxidant); benzoil and other peroxides (acne); ceramide (hydrator); copper (toning); copper peptide (toning); CoQ-10 (coenzyme Q-10) and other enzymes (toning); cortisone (calming); glycolic acids (peel); hyaluronic acid (collagen stimulation); hydrolipids (hydrator); hydroquinones (bleaching); lactic acids (peel); magnesium ascorbic phosphate (free radical scavenger, collagen stimulator, bleaching); niacin (vascular dilation); phospholipids (moisturization); potassium (toning, psoriasis), and salycilic acids (acne). Of course, any combination of such elements may be provided--even in connection with abrasive particles.

EUNSUNG-1004, [0061].

126. Karasiuk further discloses the use of abrasive member 24 which predicts the use of an abrasive inner member 124 or abrasive pad 128 comprised within the handpiece of the '287 patent. Indeed, surface-based (as opposed to free particle-based) dermabrasion was known by the Critical Date of the '287 patent. EUNSUNG-1027 (Waldron), Figs. 4-14. Furthermore, Waldron indicates "delivery of a supplemental fluid" to the handpiece, such fluid described inclusively as "… liquids to reduce friction." EUNSUNG-1027, 3:3-4, 6:5-6. Thus both Karasiuk and

Waldron predict the use of surface-based dermabrasion with delivery of treatment fluids to the treatment area.

127. In the Karasiuk-Palmer combination, it would have been obvious to use Palmer's multiple containers (e.g., Palmer's reservoirs 12_1-12_6) to hold different treatment fluids as taught by Karasiuk and Palmer—for example, a first container may hold an antioxidant formulation (e.g., vitamin) for skin treatment and a second container may hold a hydrating formulation (e.g., lotion) for skin treatment. EUNSUNG-1004, [0061]; EUNSUNG-1005, 5:37-6:32 (explaining that the six containers may contain, respectively, an aqueous bacteriostatic rinse solution, a 1% zinc chloride solution, a 2% sodium fluoride solution, a 1.64% stannous fluoride gel, a 0.12% chlorhexidine gluconate, and a 1.7% hydrogen peroxide solution); EUNSUNG-1013, 86 ("The skin can then be rinsed with tepid water and a moisturizer with adequate sunscreen applied"); EUNSUNG-1016, Abstract ("The flux and skin deposition of vitamin C across microdermabrasion-treated skin was approximately 20-fold higher than that across intact skin.").

128. Thus, a POSITA would have recognized and found obvious that, in the resulting system, the first container contains a first treatment fluid, and the at least one additional container contains an additional treatment fluid.

[1.7] the handpiece is in fluid communication with the vacuum source and the waste container through the second conduit; and

129. It is my opinion that Karasiuk-Palmer renders obvious that the

handpiece (e.g., Karasiuk's device 10) is in fluid communication with the vacuum source (e.g., Karasiuk's vacuum source 40) and the waste container (e.g., Karasiuk's collection reservoir 50) through the second conduit (e.g., Karasiuk's vacuum line 42 or collectively, Karasiuk's vacuum line 42, input 52, elbow 54, collection reservoir 50, elbow 58, output 56, second vacuum line 44, and filter 60). As discussed in [1.5]-[1.6], in the Karasiuk-Palmer system, Karasiuk's handpiece defines "[v]acuum opening 18b" that is in fluid communication with the "vacuum source 40 [] by vacuum line 42" (***second conduit***). EUNSUNG-1004, [0056], FIG. 6. Further, Karasiuk's "collection reservoir 50" (including "reservoir 51") (***waste container***) is "connected in the vacuum line between [handpiece] 10 and vacuum source 40." *Id.*, [0021], [0056]-[0057], FIG. 6.

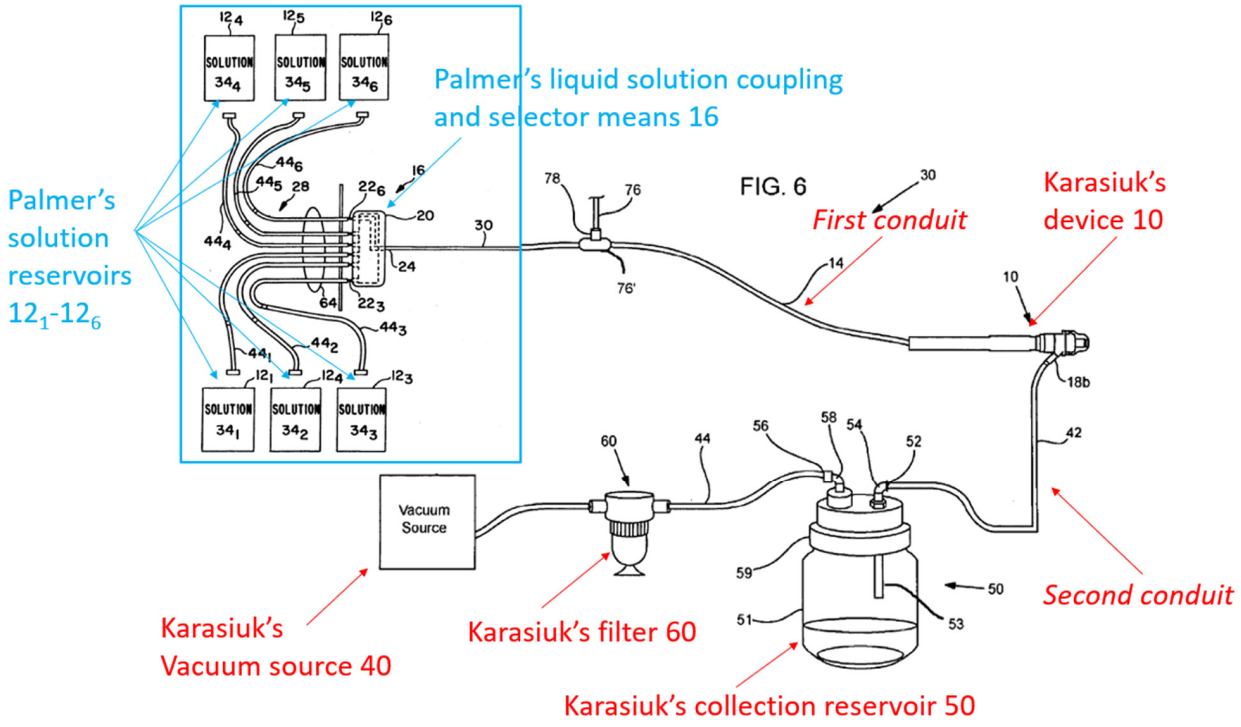

Modified FIG. 6 of Karasiuk (annotated)

130. Karasiuk discloses in relevant part:

> [0056] FIG. 6 shows an example of a microdermabrasion system 30 according to the present invention, which incorporates device 10 or 10' (though only device 10 is shown). Vacuum opening 18b is connected with a vacuum source 40 as described above, by vacuum line 42. **A collection reservoir 50 and, optionally, an inline filter 60 are connected in the vacuum line between device 10 and vacuum source 40**. Vacuum line 42 connects to an input 52 to collection reservoir 50 via elbow 54, for example, and output 56 connects with a second vacuum line 44 via elbow 58, for example. A manifold cover 59 sealably interfaces the input (52,54) and output (56,58) connections with a reservoir 51 which is typically a jar made of glass or plastic for example. **An extension tube 53 connects with input 52,54 and extends into the reservoir 51 to ensure effective delivery of waste materials (abraded skin particles and, optionally, fluids) to reservoir 51.**

EUNSUNG-1004, [0056].

131. Thus, the Karasiuk-Palmer combination renders it obvious that the handpiece is in fluid communication with the vacuum source (vacuum source 40) and the waste container (e.g., collection reservoir 50) through the second conduit (e.g., Karasiuk's vacuum line 42 or collectively, Karasiuk's vacuum line 42, input 52, elbow 54, collection reservoir 50, elbow 58, output 56, second vacuum line 44, and filter 60).

[1.8] the system is configured to deliver the first treatment fluid contained in the first container and the additional treatment fluid contained in the at least one additional container to the handpiece sequentially.

132. It is my opinion that Karasiuk-Palmer renders obvious that the system

(e.g., the combined system) is configured to deliver the first treatment fluid (e.g., vitamin) contained in the first container (e.g., Palmer's reservoir 12_1) and the additional treatment fluid (e.g., lotion) contained in the at least one additional container (e.g., Palmer's reservoir 12_6) to the handpiece (e.g., Karasiuk's device 10) sequentially. The Karasiuk-Palmer system includes "**a selector valve** for fluidly coupling the handpiece to a selected one of the liquid solutions" contained in "a plurality of solution reservoirs 12," as taught by Palmer. EUNSUNG-1005, Abstract, FIG. 1, FIGS. 5A-5C. As discussed in [1.6], the reservoirs in the combination (***first and at least one additional containers***) contain different liquid solutions (***first and additional treatment fluids***). EUNSUNG-1005, 4:50-63.

133. In addition, Palmer describes a "liquid solution coupling and selector means, generally designated 16, for coupling handpiece means 14 to a selected one of the liquid solutions in a respective solution reservoir 12…" EUNSUNG-1005, 4:50-63. Specifically, Palmer's selector valve means 20 selects which one of reservoirs 12_1-12_6 is connected to the handpiece. EUNSUNG-1005, 8:6-21 ("**selector valve means 20** comprises a main body 70 having a central cylinder core or stem 72 rotatably mounted therein."), FIG. 1. Palmer illustrates an exemplary selector valve means 20 in FIGS. 5A-5C.

134. Palmer further discloses that, "[w]hen treatment with the particular irrigating solution is completed, **the system can be either switched to another**

solution, or the selector knob may be turned to select the flush solution." Palmer 11:9-12. Palmer also discloses that "**a patient may be treated with two or more solutions during the same procedure, one after the other**." EUNSUNG-1005, 6:46-51. Karasiuk recognizes the desirability of using multiple types of skin treatment solutions during microdermabrasion. EUNSUNG-1004, [0024], [0047] ("application of lotions/vitamins or other fluids"), [0061] (listing various treatment solutions). In the Karasiuk-Palmer combination, it would have been obvious to use Palmer's multiple containers to sequentially deliver different skin treatment solutions—for example, a first container may hold an antioxidant formulation (e.g., vitamin) and a second container may hold a hydrating formulation (e.g., lotion). EUNSUNG-1004, [0061]; EUNSUNG-1005, 5:37-6:32 (explaining that the six containers may contain, respectively, an aqueous bacteriostatic rinse solution, a 1% zinc chloride solution, a 2% sodium fluoride solution, a 1.64% stannous fluoride gel, a 0.12% chlorhexidine gluconate, and a 1.7% hydrogen peroxide solution); EUNSUNG-1013, 86 ("The skin can then be rinsed with tepid water and a moisturizer with adequate sunscreen applied"); EUNSUNG-1016, Abstract ("The flux and skin deposition of vitamin C across microdermabrasion-treated skin was approximately 20-fold higher than that across intact skin.").

135. It is my opinion that a POSITA would have understood that the term "sequentially" only requires that a first treatment fluid and a second treatment fluid

be delivered one after another, as opposed to "simultaneously," and does not require automatic switching between treatment fluids. However, to the extent that this term is interpreted to require automatic switching between treatment fluids, this feature is obvious in view of knowledge of the POSITA. For example, Trueba discloses "[c]omputerized control of medication dosing, **which may be programmed by medical personnel for subsequent automated delivery**, can help avoid toxic drug interactions, overdoses, and deaths." EUNSUNG-1008, 6:6-9. As another example, Wunsch discloses that the user can program the sequencer timer 13 to automatically operate the valves 40 to achieve automatic switching between different solutions and sequential delivery of different solutions. EUNSUNG-1020, 9:36-10:64.

136. From this disclosure, the Karasiuk-Palmer combination renders it obvious that the system is configured to deliver the first treatment fluid contained in the first container (e.g., Palmer's reservoir 12_1) and the additional treatment fluid contained in the at least one additional container (e.g., Palmer's reservoir 12_2) to the handpiece sequentially.

3. Claim 2

[2] The system of claim 1, wherein the at least one additional container comprises a second container and a third container such that the console is configured to receive at least three containers.

137. It is my opinion that Karasiuk-Palmer renders obvious that the at least

one additional container comprises a second container (e.g., Palmer's reservoir 12_2) and a third container (e.g., Palmer's reservoir 12_3) such that the console is configured to receive at least three containers (e.g., Palmer's reservoirs 12_1-12_3). The Karasiuk-Palmer system would have included at least three containers received in the console, as taught by Palmer. In particular, Palmer discloses that "[a]n irrigation system…**comprises a plurality of solution reservoirs 12 (six shown)**," "handpiece means for delivering a selected one of the liquid solutions contained in one of the reservoirs 12 directly to a treatment site," and "liquid solution coupling and selector means…16 for coupling handpiece means to a selected one of the liquid solutions…" EUNSUNG-1005, 4:53-63.

138. Palmer discloses that "[t]he shelf 52 is long enough to accommodate three liquid solution reservoirs 12 in side-by-side fashion, so that an assembly of two storage racks 48 and 50…will accommodate six liquid solution reservoirs." EUNSUNG-1005, 6:66-7:2. Karasiuk recognizes the desirability of using multiple types of skin treatment solutions during microdermabrasion. EUNSUNG-1004, [0024], [0047] ("application of lotions/vitamins or other fluids"), [0061] (listing various treatment solutions). In the Karasiuk-Palmer combination, it would have been obvious to use Palmer's multiple containers to hold different treatment fluids as taught by Palmer and Karasiuk—for example, a first container may hold an antioxidant formulation (e.g., vitamin), a second container may hold a hydrating

formulation (e.g., lotion), and a third container may hold a sunscreen. EUNSUNG-1004, [0061]; EUNSUNG-1005, 5:37-6:32 (explaining that the six containers may contain, respectively, an aqueous bacteriostatic rinse solution, a 1% zinc chloride solution, a 2% sodium fluoride solution, a 1.64% stannous fluoride gel, a 0.12% chlorhexidine gluconate, and a 1.7% hydrogen peroxide solution); EUNSUNG-1013, 86 ("The skin can then be rinsed with tepid water and a moisturizer with adequate sunscreen applied"); EUNSUNG-1016, Abstract ("The flux and skin deposition of vitamin C across microdermabrasion-treated skin was approximately 20-fold higher than that across intact skin."); see element [1.8].

139. Thus, the Karasiuk-Palmer combination renders it obvious that the at least one additional container comprises a second container (e.g., Palmer's reservoir 12_2) and a third container (e.g., Palmer's reservoir 12_3) such that the console is configured to receive at least three containers (e.g., Palmer's reservoirs 12_1, 12_2, and 12_3).

4. Claim 3

[3] The system of claim 2, wherein when the handpiece is connected to the console and the first container, the second container and the third container each contains fluid and is connected to the console, the system is configured to deliver to the handpiece one at a time fluid contained in the first container, fluid contained in the second container, and fluid contained in the third container.

140. It is my opinion that Karasiuk-Palmer renders obvious that when the handpiece (Karasiuk's device 10) is connected to the console (Palmer's mobile cart

170) and the first container (Palmer's reservoir 12_1), the second container (Palmer's reservoir 12_2) and the third container (Palmer's reservoir 12_3) each contains fluid and is connected to the console, the system is configured to deliver to the handpiece one at a time fluid (e.g., vitamin) contained in the first container, fluid (e.g., lotion) contained in the second container, and fluid (e.g., another lotion) contained in the third container. As discussed in Section XI.1 (Karasiuk-Palmer combination) and with respect to [1.5], [1.6], [1.8] and [2] above, the Karasiuk-Palmer system includes at least three containers that respectively contain fluids and are connected to the console. Further, as Palmer describes, the resulting system operates to be switched between different solutions so that "a patient may be treated with two **or more** solutions during the same procedure, **one after the other**." EUNSUNG-1005, 11:9-12, 6:46-51;

141. Karasiuk recognizes the desirability of using multiple types of skin treatment solutions during microdermabrasion. EUNSUNG-1004, [0024], [0047] ("application of lotions/vitamins or other fluids"), [0061] (listing various treatment solutions). In the Karasiuk-Palmer combination, it would have been obvious to use Palmer's multiple containers to sequentially deliver different treatment solutions as taught by Palmer and Karasiuk—for example, a first container may hold an antioxidant formulation (e.g., vitamin), a second container may hold a hydrating formulation (e.g., lotion), a third container may hold a sunscreen. EUNSUNG-

1004, [0061]; EUNSUNG-1005, 5:37-6:32 (explaining that the six containers may contain, respectively, an aqueous bacteriostatic rinse solution, a 1% zinc chloride solution, a 2% sodium fluoride solution, a 1.64% stannous fluoride gel, a 0.12% chlorhexidine gluconate, and a 1.7% hydrogen peroxide solution); EUNSUNG-1013, 86 ("The skin can then be rinsed with tepid water and a moisturizer with adequate sunscreen applied"); EUNSUNG-1016, Abstract ("The flux and skin deposition of vitamin C across microdermabrasion-treated skin was approximately 20-fold higher than that across intact skin."); see element [1.8].

142. Thus, the Karasiuk-Palmer combination renders obvious a system configured to deliver to the handpiece one at a time fluid contained in the first container (e.g., Palmer's reservoir 121), fluid contained in the second container (e.g., Palmer's reservoir 122), and fluid contained in the third container (e.g., Palmer's reservoir 123).

5. Claim 8

[8] The system of claim 1, wherein the block is configured to control a flow of the first treatment fluid contained in the first container and the additional treatment fluid contained in the at least one additional container into the block with a valve when the first container and the at least one additional container are connected to the console.

143. It is my opinion that Karasiuk-Palmer renders obvious the block (e.g., Palmer's control unit enclosure 35) is configured to control a flow of the first treatment fluid (e.g., vitamin) contained in the first container (e.g., Palmer's

reservoir 12_1) and the additional treatment fluid (e.g., lotion) contained in the at least one additional container (e.g., Palmer's reservoir 12_2) into the block with a valve (e.g., Palmer's selector valve means 20) when the first container and the at least one additional container are connected to the console. As discussed in [1.3], a POSITA would have understood any one or more of (1) Palmer's selector valve 20, (2) Palmer's liquid solution coupling and selector means 16, and (3) Palmer's control unit enclosure 35 constitutes a "block." As discussed in [1.3], Palmer's selector valve means 20, Palmer's liquid solution coupling and selector means 16, and/or Palmer's control unit enclosure 35 constitutes the block in the resulting system.

144. As discussed in [1.8], the Karasiuk-Palmer renders obvious that the system is configured to deliver the first treatment fluid contained in the first container and the additional treatment fluid contained in the at least one additional container to the handpiece sequentially.

145. As discussed in Section XI.1, the Karasiuk-Palmer system includes a "selector valve" (as taught by Palmer) configured to control the flow of the fluid contained in the containers. Specifically, Palmer discloses the control unit enclosure 35 houses selector valve means 20, which is adapted to select which one of reservoirs 12_1-12_6 and is connected to the handpiece. EUNSUNG-1005, Abstract, 5:13-16, 8:6-21 ("**selector valve means 20** comprises a main body 70

having a central cylinder core or stem 72 rotatably mounted therein."), FIGS. 1, 4, 5A-5C.

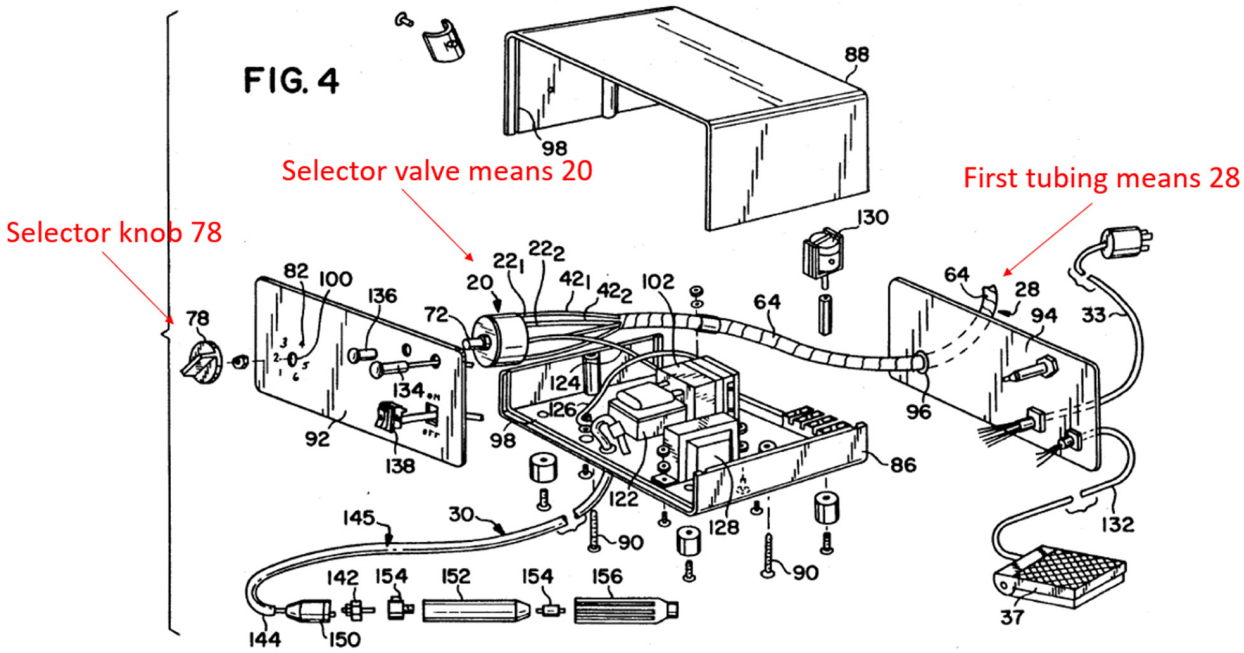

Palmer, FIG. 4 (annotated)

146. Palmer illustrates an exemplary selector valve means 20 in FIGS. 5A-5C.

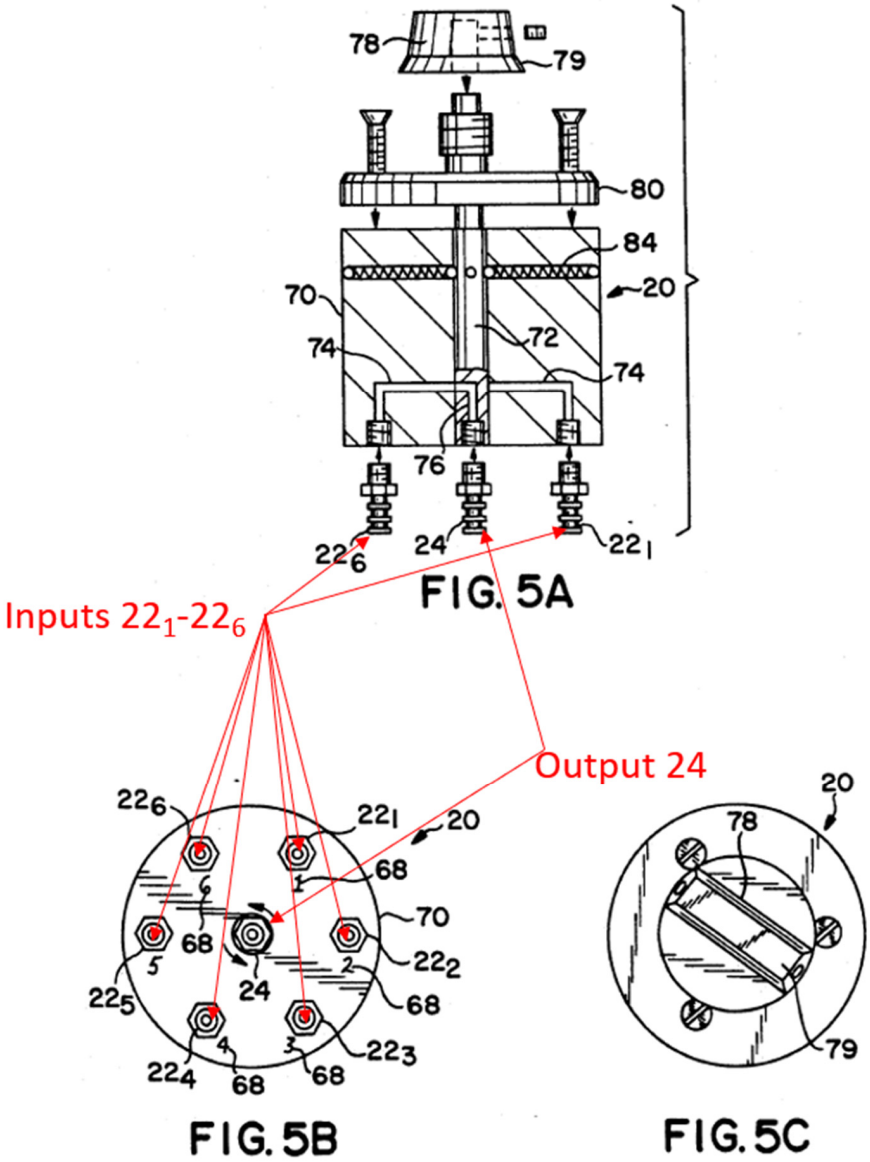

Palmer, FIGS. 5A-5C (annotated)

147. As illustrated in FIGS. 5A-5B, the selector valve means 20 includes a main body 70 that defines multiple "liquid inlet passages 74" with multiple "input port[s] 22" and a "liquid outlet passage 76" with a "selector valve output port 24." EUNSUNG-1005, 8:6-21. Further, the main body 70 defines a "bore which receives the rotatable core 72 in a plane common with the inner ends of the other

inlet passages 74." *Id.* The "liquid outlet passage 76 is formed in the rotatable core 72 having one end opening into the selector valve output port 24 and another end opening onto the cylindrical core surface in the plane of the inner ends of passages." *Id.*

148. In addition, Karasiuk describes that "[a] breather line 76 may be connected inline via T-joint 76′, for example, or other interconnection, and **includes an adjustable valve 78** or other means for varying an amount of air that is allowed into the tube 14." EUNSUNG-1004, [0059], FIG. 6. Karasiuk also discloses "a valve or other flow control mechanism may be provided in fluid delivery line 14 to control the amount of liquid passing through the line." *Id*. In the Karasiuk-Palmer combination, a POSITA would have been motivated to place the adjustable valve 78 in Palmer's control unit enclosure 35 for added portability and/or organization.

149. Thus, the Karasiuk-Palmer combination renders it obvious that the block (e.g., Palmer's selector valve 20, liquid solution coupling and selector means 16, and/or control unit enclosure 35) is configured to control a flow of the first treatment fluid contained in the first container (e.g., Palmer's reservoir 12_1) and the additional treatment fluid contained in the at least one additional container (e.g., Palmer's reservoir 12_2) into the block with a valve (e.g., Palmer's selector valve means 20 or Karasiuk's adjustable valve 78) when the first container and the at

least one additional container are connected to the console.

6. Claim 9

[9] The system of claim 1, wherein the system is configured to control a flow of the first treatment fluid contained in the first container to the handpiece through the block when each of the first container and the handpiece is connected to the console.

150. It is my opinion that Karasiuk-Palmer renders obvious that the system (e.g., the combined system) is configured to control a flow of the first treatment fluid (e.g., vitamin) contained in the first container (e.g., Palmer's reservoir 121) to the handpiece (e.g., Karasiuk's device 10) through the block (e.g., Palmer's control unit enclosure 35) when each of the first container and the handpiece is connected to the console (e.g., Palmer's mobile cart 170). As discussed above regarding element [8], the Karasiuk-Palmer combination renders it obvious that the system is configured to control a flow (e.g., using either Palmer's selector valve means 20 or Karasiuk's adjustable valve 78) of the first treatment fluid contained in the first container (e.g., Palmer's reservoir 12_1) to the handpiece (e.g., Karasiuk's device 10) through the block (e.g., Palmer's selector valve 20, liquid solution coupling and selector means 16, and/or control unit enclosure 35) when each of the first container and the handpiece is connected to the console.

151. Palmer discloses in relevant part:

> Irrigation system and method for delivering a selected one of multiple liquid solutions to a treatment site include a plurality of solution reservoirs, each including a quantity of a respective

> liquid solution, a handpiece, **a selector valve for fluidly coupling the handpiece to a selected one of the liquid solutions and a pump for causing a selected one of the liquid solutions to flow to the handpiece for delivery to the treatment site**. Each of the liquid solutions may have a color which is distinguishable from the color of the other liquid solutions and the tubing to the handpiece is transparent so that the color of a liquid solution flowing through the tube is visible during treatment thereby enabling the identity of the particular solution being used to be quickly verified during treatment. The irrigation system is preferably a closed system with the pump as well as a heater for heating the liquid solution being situated outside of the flow path of the liquid solution. A solution reservoir for use in such an irrigating system is also disclosed.

EUNSUNG-1005, Abstract.

152. Palmer also discloses in relevant part:

> Briefly, in accordance with the present invention, these and other objects are attained by providing an improvement in irrigating arrangements which include a plurality of reservoirs containing respective irrigating solutions, **handpiece means for delivering a selected one of the solutions directly to a treatment site, liquid solution coupling and selector means for coupling the handpiece means to the reservoir of a selected one of the liquid solutions**, and pump means for causing the selected one of the liquid solutions to flow from its reservoir to the handpiece means for delivery to the treatment site.

EUNSUNG-1005, 3:15-26.

153. Karasiuk discloses in relevant part:

> **Upon forming the vacuum loop as described above, the fluid contents in fluid reservoir 70 are drawn through tube 14 and into device 10 where they flow out of the cannula 16 through openings 16d and are applied to the skin**. A targeted area of the skin (which is defined by the perimeter of the opening 20a is drawn up into the tip 20 and a central portion of

> the targeted area of skin is drawn into contact with abrasive member 24, while portions of the targeted area surrounding the central portion are treated with the fluid contents. As the user or operator of the device 10 glides the tip 20 over the surface of the skin, the targeted area in contact with the abrasive surface 24 is scraped over the abrasive surface wherein microdermabrasion of that portion of the skin is performed. Continued movement of the tip over the skin likewise continues the microdermabrasion of the targeted area, which changes along with the movement of the tip.

EUNSUNG-1004, [0064].

154. Importantly, different from claim 8 (which recites "the **block** is configured to control"), claim 9 recites that the "**system** is configured to control," indicating that the control mechanism is not in the "block." Based on the disclosure of the '287 patent, such a control mechanism can be controller 60 in the handpiece, which adjusts a flow rate of the first treatment fluid when the first container is connected to the handpiece through the block. Karasiuk-Palmer renders such a control mechanism obvious because Karasiuk describes that "[a] breather line 76 may be connected inline via T-joint 76′, for example, or other interconnection, and **includes an adjustable valve 78** or other means for varying an amount of air that is allowed into the tube 14." EUNSUNG-1004, [0059], FIG. 6. Karasiuk also discloses "a valve or other flow control mechanism may be provided in fluid delivery line 14 to control the amount of liquid passing through the line." *Id*. In the Karasiuk-Palmer combination, a POSITA would have found it obvious that Karasiuk's adjustable valve 78 is configured to control a flow of the first treatment

fluid contained in the first container to the handpiece through the block when each of the first container and the handpiece is connected to the console.

7. Claim 10

[10] The system of claim 9, wherein the system is configured to separately control a flow of a second treatment fluid contained in the at least one additional container to the handpiece through the block when each of the first container, the at least one additional container, and the handpiece are connected to the console.

155. It is my opinion that Karasiuk-Palmer renders obvious that the system (e.g., the combined system) is configured to separately control a flow of a second treatment fluid (e.g., lotion) contained in the at least one additional container (e.g., Palmer's reservoir 12_2) to the handpiece (Karasiuk's device 10) through the block (e.g., Palmer's control unit enclosure 35) when each of the first container (e.g., Palmer's reservoir 12_1), the at least one additional container, and the handpiece are connected to the console (e.g., Palmer's mobile cart 170). As discussed above regarding element [8], the Karasiuk-Palmer combination renders it obvious that the system is configured to separately control a flow of a second treatment fluid contained in the at least one additional container (e.g., Palmer's reservoir 12_2) to the handpiece (e.g., Karasiuk's device 10) through the block (e.g., Palmer's selector valve 20, liquid solution coupling and selector means 16, and/or control unit enclosure 35) when each of the first container, the at least one additional container, and the handpiece are connected to the console. Thus, the Karasiuk-

Palmer combination renders this claim obvious based on Palmer's disclosure of separate control of different treatment fluids being delivered to the handpiece.

156. Importantly, different from claim 8 (which recites the "**block** is configured to control"), claim 10 recites that the "**system** is configured to control," indicating that the control mechanism is not in the "block." Based on the disclosure of the '287 patent, such a control mechanism can be controller 60 in the handpiece, which adjusts a flow rate of the first treatment fluid when the first container is connected to the handpiece through the block. Karasiuk-Palmer renders such a control mechanism obvious because Karasiuk describes that "[a] breather line 76 may be connected inline via T-joint 76′, for example, or other interconnection, and **includes an adjustable valve 78** or other means for varying an amount of air that is allowed into the tube 14." EUNSUNG-1004, [0059], FIG. 6. Karasiuk also discloses "a valve or other flow control mechanism may be provided in fluid delivery line 14 to control the amount of liquid passing through the line." *Id*. In the Karasiuk-Palmer combination, a POSITA would have found it obvious that Karasiuk's adjustable valve 78 is configured to separately control a flow of a second treatment fluid contained in the at least one additional container to the handpiece through the block when each of the first container, the at least one additional container, and the handpiece are connected to the console. When Palmer's selector valve 20 connects the handpiece to a first container (e.g.,

Palmer's reservoir 12_1), Karasiuk's adjustable valve 78 separately controls the flow of a first treatment solution in the first container, and when Palmer's selector valve 20 connects the handpiece to a second container (e.g., Palmer's reservoir 12_2), Karasiuk's adjustable valve 78 separately controls the flow of a second treatment solution in the second container.

157. Alternatively, a POSITA would have found it obvious to use a manifold to implement Palmer's switching treatment fluids, by using a separate control for each treatment fluid. Using a manifold for selecting between different treatment fluids by using a separate control for each treatment fluid was well-known and would have been within a POSITA's general knowledge. EUNSUNG-1020, Abstract, 6:18-26 ("reversible electric motors 48, FIG. 3, or solenoids 59, FIG. 4, for **individually controlling** the operation of the respective valves 40"), 7:39-56, 8:17-26, FIGS. 1-4; EUNSUNG-1009, Abstract, 4:14-52 ("A knob 45 is provided on the internally threaded valve stem 42 to permit the operation of the valve 40"), FIGS. 1-3; EUNSUNG-1021, Abstract, 1:52-53 ("Stopcocks 24, 28, each have a handle thereon which is rotated to direct the flow of pressure laden fluids through catheter manifold 14), 2:17-21, 4:57-65, FIG. 1; EUNSUNG-1023, Abstract, FIG. 1. Based on this general knowledge, a POSITA would have found it obvious to implement Palmer's functionality using a manifold for selecting between different treatment fluids by using a separate control for each treatment

fluid. Indeed, a POSITA would have viewed a manifold having a separate control for each treatment fluid as one of a finite number of options to achieve the functionality described by Palmer that would have been obvious to try. A POSITA would have had a reasonable expectation of success to implement Palmer's switching between different fluids and providing a single fluid output using such a manifold, as it would have merely involved a simple substitution of one well-known element for another to obtain predictable results.

158. For example, Wunsch discloses an apparatus (e.g., console 10) for sequentially dispensing a plurality of solutions through a manifold (e.g., manifold selector 17) that is connected to each of the solutions to be administered. EUNSUNG-1020, Abstract, 7:39-56, 8:17-26, FIGS. 1-4. As shown in FIG. 1, the manifold selector 17 includes a plurality of valves 40, which control the flow of solution from the plurality of bottles 15. EUNSUNG-1020, 6:18-48, 7:16-56. In operation, the user can program the sequencer timer 13 to automatically operate the valves 40 to achieve automatic switching between different solutions and sequential delivery of different solutions. EUNSUNG-1020, 9:36-10:64.

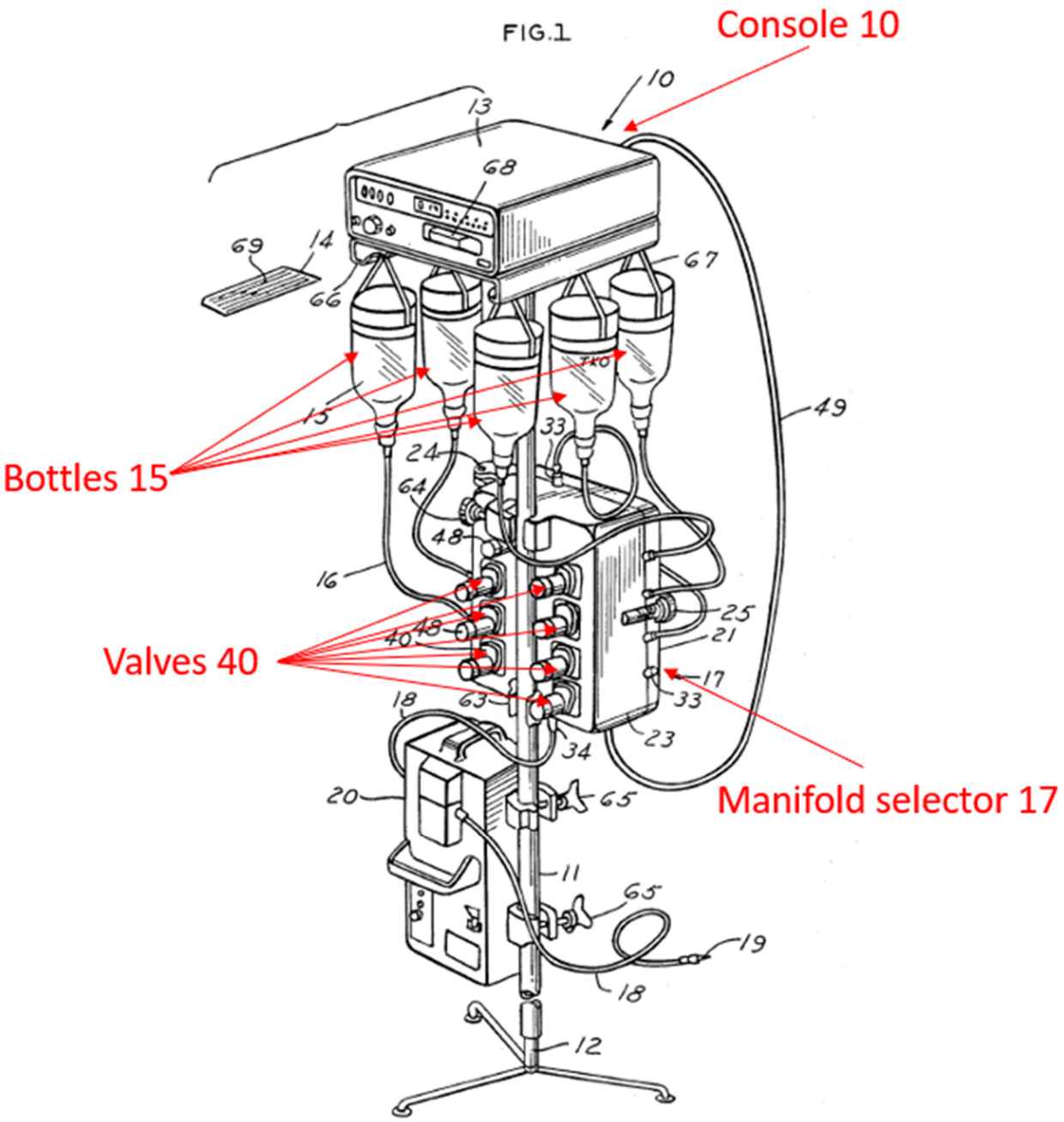

Wunsch, FIG. 1 (annotated)

8. Claim 11

[11.pre] A skin treatment apparatus comprising:

159. It is my opinion that Karasiuk-Palmer renders obvious a skin

treatment apparatus. See element [1.pre].

[11.1] a console that includes a fluid control member that is configured to be in fluid communication with at least a first container and a second container when the first container and the second container are connected to the fluid control member;

160. It is my opinion that Karasiuk-Palmer renders obvious a console (e.g., Palmer's mobile cart 170) that includes a fluid control member (e.g., Palmer's control unit enclosure 35) that is configured to be in fluid communication with at least a first container (e.g., Palmer's reservoir 12_1) and a second container (e.g., Palmer's reservoir 12_2) when the first container and the second container are connected to the fluid control member. See element [1.3]As discussed above regarding element [1.1], the Karasiuk-Palmer combination renders obvious a console (e.g., mobile cart 170) configured to receive a first container (e.g., solution reservoir 12_1) and at least one additional container (e.g., solution reservoir 12_2), as taught by Palmer. EUNSUNG-1005, FIGS. 2, 4, 11B.

161. As discussed above regarding element [1.3], the Karasiuk-Palmer combination renders obvious a block (e.g., Palmer's selector valve 20, liquid solution coupling and selector means 16, and/or control unit enclosure 35) in the console, wherein the block is: configured to selectively receive fluid from the first container (e.g., solution reservoir 12_1) when the first container is connected to the console; configured to selectively receive fluid from the at least one additional container (e.g., solution reservoir 12_2) when the at least one additional container is

connected to the console; and configured to selectively be in fluid communication with the handpiece through a first conduit (e.g., Karasiuk's tube 14 or collectively Palmer's second tubing means 30, Karasiuk's T joint 76' and Karasiuk's tube 14) when the handpiece is connected to the console.

162. In the Karasiuk-Palmer combination, a POSITA would have appreciated that any one of (1) Palmer's selector valve means 20, (2) Palmer's liquid solution coupling and selector means 16, and (3) Palmer's control unit enclosure 35 aligns with the '287 patent's disclosure of "fluid control member." The '287 patent's specification is silent as to the term "fluid control member" while it allegedly describes a "manifold" or "manifold system" as performing similar functionalities. EUNSUNG-1001, 5:28-30 ("manifold system 24 can control the flow of treatment material from containers 26 into and through the line 20."), Abstract ("the manifold is configured to hold releasably a plurality of fluid sources and deliver fluid from at least one of the plurality of fluid sources to the handpiece assembly"). In fact, other patents of the '287 patent's family expressly recites the term "manifold" for similar limitations in the claims. *See* EUNSUNG-1017, claim 1; EUNSUNG-1018, claim 1. In the '287 patent, Patent Owner used the term "fluid control member" in an apparent attempt to broaden the scope of protection. EUNSUNG-1001, claim 1.

163. Alternatively, to the extent Patent Owner argues that the claimed

"fluid control member" requires the use of a manifold and that Palmer's structure does not comprise a manifold, a POSITA would have found it obvious to use a manifold to implement the functionality of switching treatment fluids described by Palmer. Manifolds were well-known devices for selecting between different fluids and would have been within a POSITA's general knowledge. EUNSUNG-1010, FIGS. 2A-2G, 7A-7D, [0086] ("Manifold 26 contains a valve which controls the routing of fluid connections between patient port 84 and either syringe bottom port 80 or transducer/saline port 82."), [0088]; EUNSUNG-1019, Abstract, 6:43-45 ("The ports, valves and conduits of the manifold may be configured in any manner that permits the desired flow of fluid through the manifold"), 10:30-44, FIGS. 7-10; EUNSUNG-1020, Abstract ("Apparatus for sequentially dispensing a plurality of solutions through an intravenous supply catheter includes a disposable tubing manifold…"), 7:39-56, 8:17-26, FIGS. 1-4; EUNSUNG-1021, Abstract, 4:57-65, FIG. 1; EUNSUNG-1022, Abstract, FIGS. 1-4. Based on this general knowledge, a POSITA would have found it obvious to implement Palmer's functionality using a manifold because manifolds were known to provide the switching between different fluids and providing a single fluid output, as described by Palmer. *Id*. Indeed, a POSITA would have viewed a manifold as one of a finite number of options to achieve the functionality described by Palmer that would have been obvious to try. *Id*. A POSITA would have had a reasonable expectation of success

to implement Palmer's switching between different fluids and providing a single fluid output using a manifold, as it would have merely involved a simple substitution of one well-known element for another to obtain predictable results. *Id*.

164. As discussed above regarding [1.1], Palmer's control unit enclosure 35 is included in the "mobile cart 170" (***console***). EUNSUNG-1005, 9:58-10:16, FIG. 11B. Palmer's "control unit enclosure 35 houses the pump and selector valve means," which includes Palmer's "liquid solution coupling and selector means." EUNSUNG-1005, 5:13-14, 4:53-68, 8:22-9:16.

165. Thus, the Karasiuk-Palmer combination renders obvious a console (e.g., Palmer's wheeled cart 170) that includes a fluid control member (e.g., Palmer's selector valve means 20) that is configured to be in fluid communication with at least a first container (e.g., Palmer's reservoir 12_1) and a second container (e.g., Palmer's reservoir 12_2) when the first container and the second container are connected to the fluid control member.

[11.2] a handpiece assembly configured to contact a skin surface of a subject;

166. It is my opinion that Karasiuk-Palmer renders obvious a handpiece assembly (e.g., Karasiuk's device 10) configured to contact a skin surface of a subject. See element [1.2].

[11.3] a waste conduit configured to be in fluid communication with the handpiece assembly and a vacuum source to move waste away from the

handpiece assembly when the waste conduit and the handpiece assembly are each connected to the console; and

167. It is my opinion that Karasiuk-Palmer renders obvious a waste conduit (e.g., the vacuum line between device 10 and vacuum source 40, or collectively Karasiuk's vacuum line 42, second vacuum line 44, vacuum line 46) configured to be in fluid communication with the handpiece assembly (Karasiuk's device 10) and a vacuum source (Karasiuk's vacuum source 40) to move waste away from the handpiece assembly when the waste conduit and the handpiece assembly are each connected to the console (Palmer's mobile cart 170). See elements [1.1], [1.4], [1.5], and [1.6]. As I noted in [1.4] and [1.5], Karasiuk describes "vacuum source 40" and "collection reservoir 50" (***waste conduit***) for removing "waste materials (abraded skin particles, and optionally, fluids)." EUNSUNG-1004, [0056], [0064]-[0066], FIG. 6. As shown in Modified FIG. 6, Karasiuk's collection reservoir 50 (***waste conduit***) is in fluid communication with device 10 (***handpiece assembly***) and vacuum source 40 (***vacuum source***). In addition, the ***vacuum source*** 40 and the device 10 (***handpiece assembly***) are in fluid communication with the collection reservoir 50 via "the vacuum line between device 10 and vacuum source 40" (***waste conduit***).

168. As discussed above in Section XI.1, the Karasiuk-Palmer system replaces Karasiuk's reservoir 70 with Palmer's multiple reservoirs and "liquid solution coupling and selector means 16" to thereby allow selection of different

treatment solutions. As discussed in [1.1], Karasiuk's device 10 (***handpiece assembly***) is connected to Palmer's "liquid solution coupling and selector means 16" (part of the ***console***) via "tube 14." EUNSUNG-1004, [0056], [0059], [0064]. Similarly, Karasiuk's collection reservoir 50 and the vacuum line (e.g., collectively vacuum line 42, second vacuum line 44, vacuum line 46) (***waste conduit***) are also connected to the ***console***. See Section XI.1.

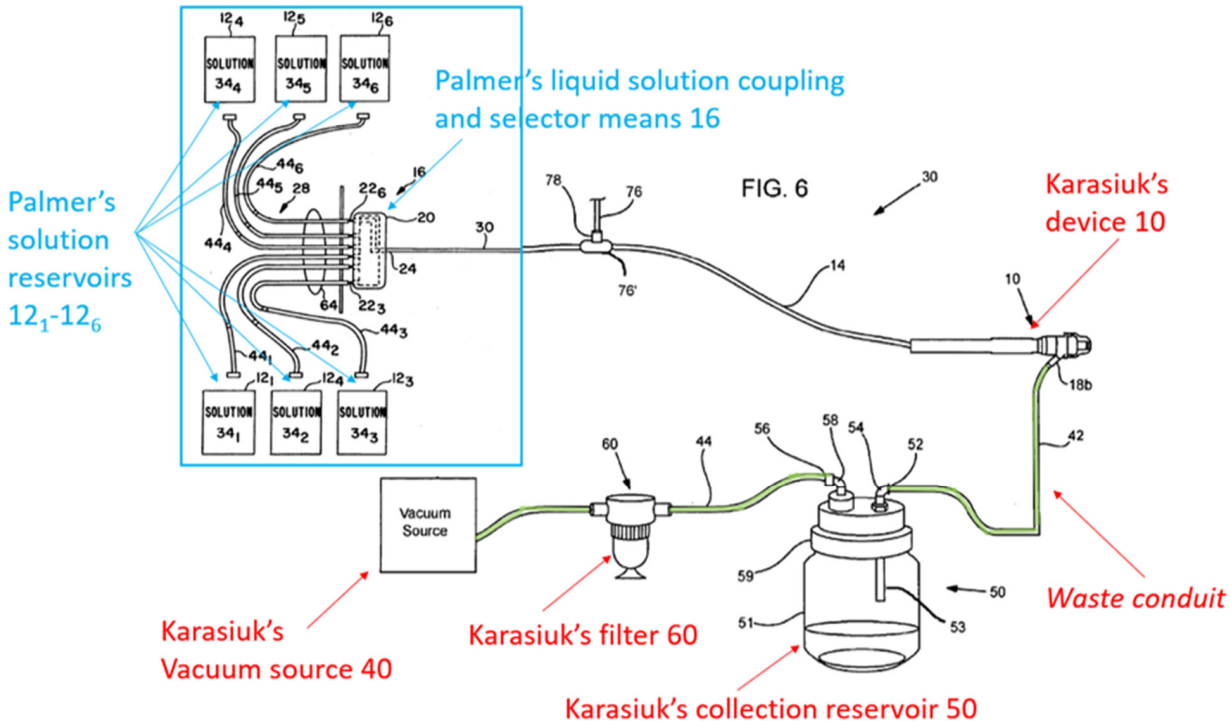

Modified FIG. 6 of Karasiuk (annotated)

169. Karasiuk describes "collection reservoir 50" (including "reservoir 51") (***waste conduit***) for receiving "waste materials (abraded skin particles, and optionally, fluids)" that is "removed through the microdermabrasion process." EUNSUNG-1004, [0056], [0064]-[0066]. As shown in modified FIG. 6 of

Karasiuk (above), the "reservoir 51" is connected to the "opening or port 18b" of the device 10 (***handpiece***) via the "the vacuum line between device 10 and vacuum source 40" (***waste conduit***) and device 10 is connected to Palmer's "liquid solution coupling and selector means 16" (part of the ***console***; *see* element [1.1]) via the "tube 14." EUNSUNG-1004, [0056], [0059], [0064]. As such, Karasiuk's ***handpiece*** is connected to the ***console*** in the Karasiuk-Palmer system.

170. Further, Karasiuk's handheld device 10 defines "opening or port 18b" for "connection of a vacuum source … via a vacuum line" and to ***move*** "the exfoliated skin particles and any other waste that is removed through the microdermabrasion process" ***away from*** the handheld device. EUNSUNG-1004, [0054], [0066]. As discussed in Section XI.1, a POSITA would have been motivated and found it obvious to include the vacuum source in the console (e.g., Palmer's mobile cart 170). Thus, the Karasiuk-Palmer combination renders obvious a waste conduit (e.g., the vacuum line between device 10 and vacuum source 40 or collectively Karasiuk's vacuum line 42, second vacuum line 44, vacuum line 46) configured to be in fluid communication with the handpiece assembly (e.g., Karasiuk's device 10) and a vacuum source (e.g., Karasiuk's vacuum source 40) to move waste away from the handpiece assembly when the waste conduit and the handpiece assembly are each connected to the console.

[11.4] wherein when each of the first container and the second container are connected to the console, the fluid control member is configured to be in fluid

communication with each of the first container and the second container;

171. It is my opinion that Karasiuk-Palmer renders obvious that when each of the first container (e.g., Palmer's reservoir 12_1) and the second container (e.g., Palmer's reservoir 12_2) are connected to the console (e.g., Palmer's mobile cart 170), the fluid control member (e.g., Palmer's control unit enclosure 35) is configured to be in fluid communication with each of the first container and the second container. See elements [1.1], [1.3], [1.6], [1.8], and [11.1].

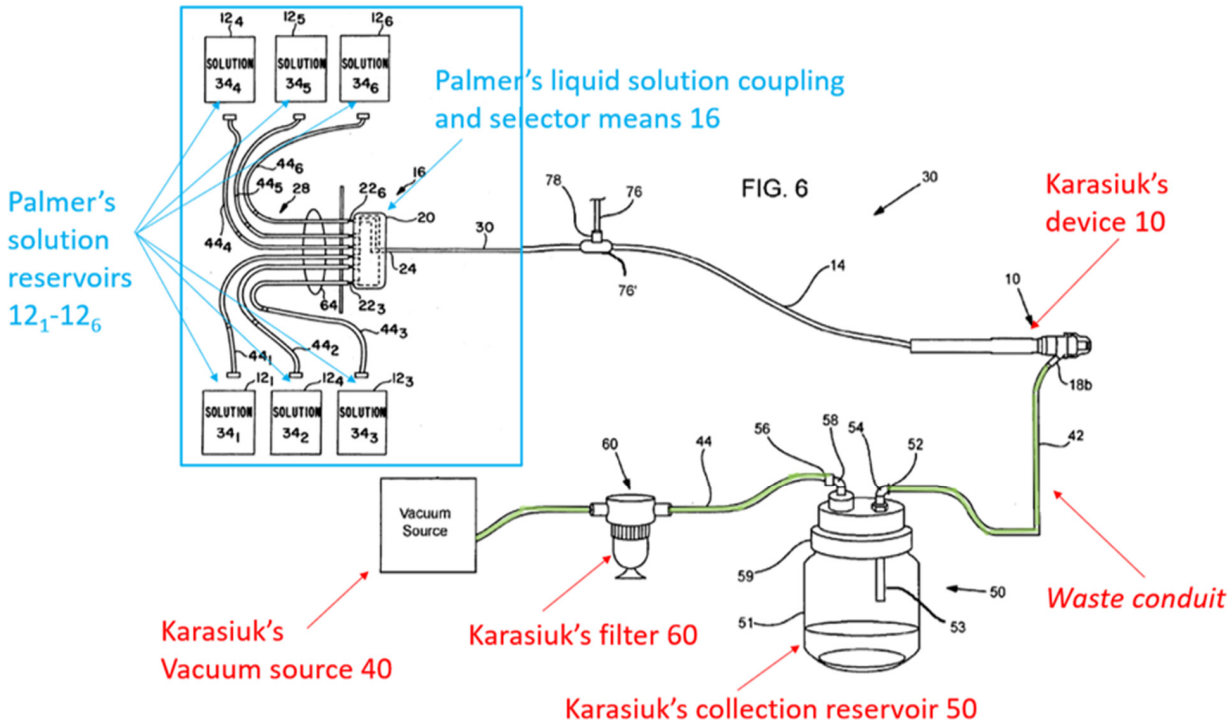

Modified FIG. 6 of Karasiuk (annotated)

172. As discussed above regarding element [11.1], the Karasiuk-Palmer combination renders it obvious that when each of the first container (e.g., Palmer's reservoir 12_1) and the second container (e.g., Palmer's reservoir 12_2) are connected

to the console (e.g., Palmer's wheeled cart 170), the fluid control member (e.g., Palmer's selector valve means 20) is configured to be in fluid communication with each of the first container and the second container.

[11.5] wherein when the handpiece assembly is connected to the console, the fluid control member is configured to be in fluid communication with the handpiece assembly;

173. It is my opinion that Karasiuk-Palmer renders obvious that when the handpiece assembly (e.g., Karasiuk's device 10) is connected to the console (e.g., Palmer's mobile cart 170), the fluid control member (Palmer's control unit enclosure 35) is configured to be in fluid communication with the handpiece assembly. See elements [1.1], [1.3], [1.5]-[1.6], [1.8], and [11.1].

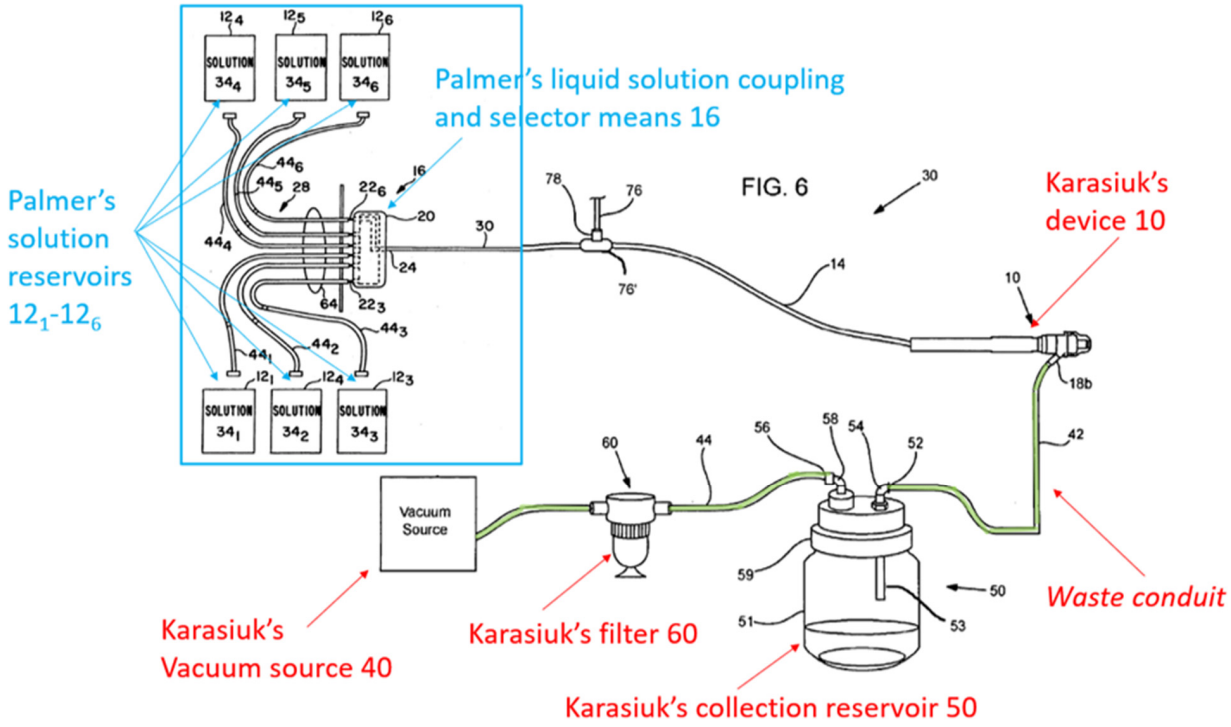

Modified FIG. 6 of Karasiuk (annotated)

174. Palmer discloses "a selector valve for fluidly coupling the handpiece to a selected one of the liquid solutions." EUNSUNG-1005, Abstract, FIG. 1, FIGS. 5A-5C. Specifically, Palmer discloses using selector valve means 20 to select which one of reservoirs 12_1-12_6 is connected to the handpiece. EUNSUNG-1005, 8:6-21.

175. As discussed above regarding element [11.1], the Karasiuk-Palmer combination renders it obvious that when the handpiece assembly is connected to the console, the fluid control member (e.g., Palmer's selector valve means 20) is configured to be in fluid communication with the handpiece assembly.

[11.6] wherein when (i) each of the first container and the second container contains treatment material, (ii) the first container and the second container are connected to the console, and (iii) the handpiece assembly is connected to the console, the skin treatment apparatus is configured to selectively draw treatment material from the first container or the second container to the handpiece assembly using, at least in part, a vacuum created along a distal end of the handpiece assembly by the vacuum source.

176. It is my opinion that Karasiuk-Palmer renders obvious that when (i) each of the first container (e.g., Palmer's reservoir 12_1) and the second container (e.g., Palmer's reservoir 12_2) contains treatment material, (ii) the first container and the second container are connected to the console (e.g., Palmer's mobile cart 170), and (iii) the handpiece assembly (e.g., Karasiuk's device 10) is connected to the console, the skin treatment apparatus is configured to selectively draw treatment material from the first container or the second container to the handpiece assembly

using, at least in part, a vacuum created along a distal end of the handpiece assembly by the vacuum source (e.g., Karasiuk's vacuum source 40). See element [1.1], [1.3], [1.6], [1.8] and [11.1].

177. As discussed above in Section XI.1 and regarding claim 1, the Karasiuk-Palmer system replaces Karasiuk's reservoir 70 with Palmer's multiple reservoirs and "liquid solution coupling and selector means 16" to thereby allow selection of different treatment solutions. Karasiuk discloses that upon forming a vacuum loop, the fluid contents in the fluid reservoir are "drawn through tube 14 and into device 10…and are applied to the skin." EUNSUNG-1004, [0064].

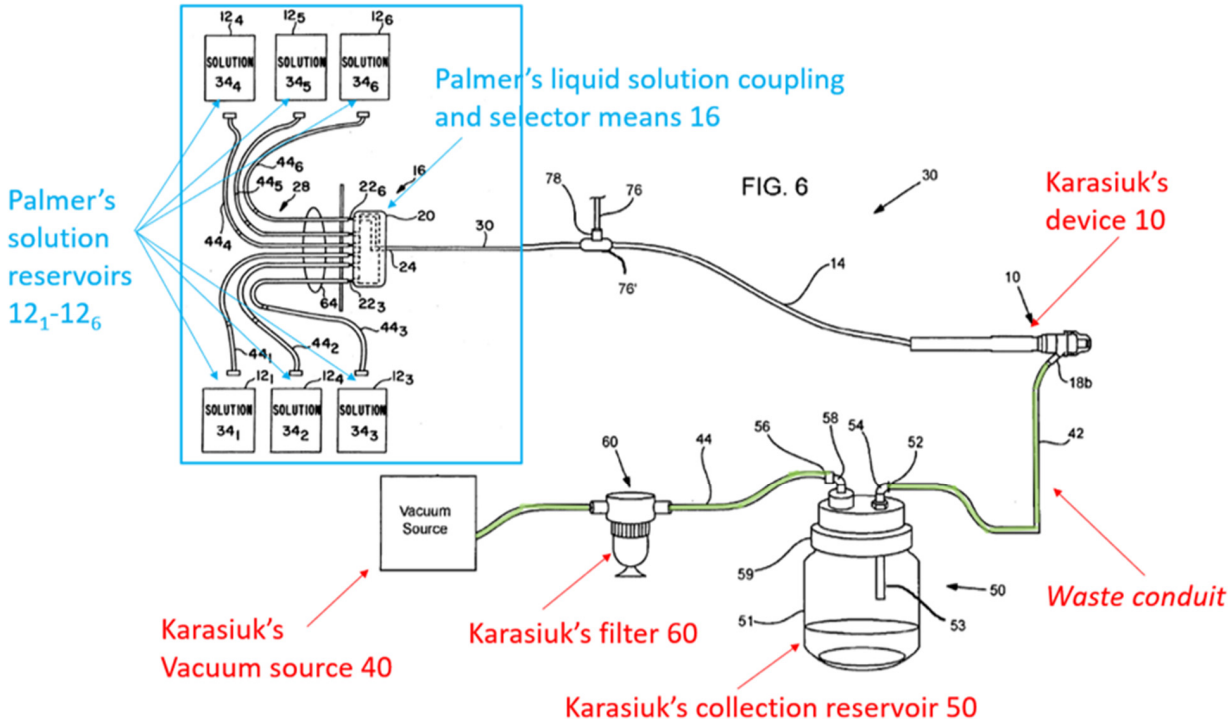

Modified FIG. 6 of Karasiuk (annotated)

178. As discussed above in Section XI.1, in the Karasiuk-Palmer combination, a POSITA would have been motivated to keep Karasiuk's vacuum source to pump the treatment solutions from Palmer's fluid containers because Karasiuk's vacuum source serves two functions simultaneously: (1) pumping the treatment fluids and (2) removing waste/debris. Specifically, Karasiuk discloses: "A fluid reservoir adapted to hold treatment liquids may be connected to the conduit, wherein, upon application of vacuum through the vacuum access opening, **the treatment liquids are drawn through the conduit and delivered to the at least one opening in the tip**." EUNSUNG-1004, [0020], FIG. 6. Thus, it would have been obvious that when the handpiece assembly is connected to the console (e.g., Palmer's mobile cart 170), the skin treatment apparatus is configured to selectively draw treatment material from the first container or the second container to the handpiece assembly using, at least in part, a vacuum created along a distal end (e.g., one opening in the tip) of the handpiece assembly by the vacuum source (e.g., Karasiuk's vacuum source 40). Karasiuk discloses in relevant part:

> Upon forming the vacuum loop as described above, the fluid contents in fluid reservoir 70 are drawn through tube 14 and into device 10 where they flow out of the cannula 16 through openings 16d and are applied to the skin. A targeted area of the skin (which is defined by the perimeter of the opening 20a is drawn up into the tip 20 and a central portion of the targeted area of skin is drawn into contact with abrasive member 24, while portions of the targeted area surrounding the central portion are treated with the fluid contents. As the user or operator of the device 10 glides the tip 20 over the surface of the skin, the

> targeted area in contact with the abrasive surface 24 is scraped over the abrasive surface wherein microdermabrasion of that portion of the skin is performed. Continued movement of the tip over the skin likewise continues the microdermabrasion of the targeted area, which changes along with the movement of the tip.

EUNSUNG-1004, [0064].

179. Palmer discloses "**a selector valve** for fluidly coupling the handpiece to a selected one of the liquid solutions." EUNSUNG-1005, Abstract, FIG. 1, FIGS. 5A-5C. Specifically, Palmer discloses using selector valve means 20 to select which one of reservoirs 12_1-12_6 is connected to the handpiece. EUNSUNG-1005, 8:6-21 ("**selector valve means 20** comprises a main body 70 having a central cylinder core or stem 72 rotatably mounted therein."). Palmer illustrates an exemplary selector valve means 20 in FIGS. 5A-5C.

180. Palmer discloses each of reservoirs 12_1-12_6 can contain a different treatment material: "For example,… the solution 34_1 comprises an aqueous bacteriostatic solution for use as a flush…, solution 34_2 comprises a 1% zinc chloride irrigating solution…, solution 34_3 comprises a 2% sodium fluoride irrigating solution…, solution 34_4 comprises a 1.64% stannous fluoride gel…, solution 34_5 comprises a 0.12% chlorhexidine gluconate irrigating solution…, and solution 34_6 comprises a 1.7% hydrogen peroxide solution." EUNSUNG-1005, 5:52-64.

181. As I noted with respect to [11.3] above, Karasiuk's handheld device

10 defines "opening or port 18b" for "connection of a vacuum source … via a vacuum line" and to remove "the exfoliated skin particles and any other waste that is removed through the microdermabrasion process" from the handheld device when its "treatment tip 20" "glide[s] over the skin surface for application of lotions/vitamins or other fluids thereto during processing." EUNSUNG-1004, [0054], [0066], [0047], FIG. 1A. Thus, the Karasiuk-Palmer combination renders it obvious that when (i) each of the first container (e.g., Palmer's reservoir 12_1) and the second container (e.g., Palmer's reservoir 12_2) contains treatment material (e.g., hydrogen peroxide), (ii) the first container and the second container are connected to the console, and (iii) the handpiece assembly is connected to the console, the skin treatment apparatus is configured to selectively draw treatment material from the first container or the second container to the handpiece assembly using, at least in part, a vacuum created along a distal end of the handpiece assembly by the vacuum source (e.g., Karasiuk's vacuum source 40).

9. Claim 12

[12] The skin treatment apparatus of claim 11, wherein treatment material from the first container and the second container are configured to be drawn to the handpiece assembly sequentially.

182. The limitations of claim 12 are substantially the same as [1.8]. Therefore, the analysis of [1.8] similarly applies for claim 12. In particular, it is my opinion that Karasiuk-Palmer renders obvious that treatment material (e.g., vitamin

or lotion) from the first container (e.g., Palmer's reservoir 12_1) and the second container (e.g., Palmer's reservoir 12_2) are configured to be drawn to the handpiece assembly (e.g., Karasiuk's device 10) sequentially. Palmer discloses: "When treatment with the particular irrigating solution is completed, **the system can be either switched to another solution**, or the selector knob may be turned to select the flush solution." EUNSUNG-1005, 11:9-12. Palmer discloses: "**a patient may be treated with two or more solutions during the same procedure, one after the other**." EUNSUNG-1005, 6:46-51.

183. It is my opinion that a POSITA would have understood that the term "sequentially" only requires that a first treatment fluid and a second treatment fluid be delivered one after another, as opposed to "simultaneously," and does not require automatic switching between treatment fluids. However, to the extent that this term is interpreted to require automatic switching between treatment fluids, this feature is obvious in view of knowledge of the POSITA. For example, Trueba discloses "[c]omputerized control of medication dosing, **which may be programmed by medical personnel for subsequent automated delivery**, can help avoid toxic drug interactions, overdoses, and deaths." EUNSUNG-1008, 6:6-9. As another example, Wunsch discloses that the user can program the sequencer timer 13 to automatically operate the valves 40 to achieve automatic switching between different solutions and sequential delivery of different solutions.

EUNSUNG-1020, 9:36-10:64.

184. Thus, the Karasiuk-Palmer combination renders it obvious that the treatment material from the first container and the second container are configured to be drawn to the handpiece assembly sequentially.

10. Claim 14

[14] The skin treatment apparatus of claim 11, wherein the console comprises the vacuum source.

185. It is my opinion that Karasiuk-Palmer renders obvious that the console (e.g., Palmer's mobile cart 170) comprises the vacuum source (e.g., Karasiuk's vacuum source 40). See element [1.4].

11. Claim 15

[15] The skin treatment apparatus of claim 11, wherein the skin treatment apparatus is configured to deliver a single treatment material from the first container to a patient's skin.

186. It is my opinion that Karasiuk-Palmer renders obvious that the skin treatment apparatus is configured to deliver a single treatment material from the first container to a patient's skin. As discussed above in Section XI.1, the Karasiuk-Palmer system replaces Karasiuk's reservoir 70 with Palmer's multiple reservoirs and "liquid solution coupling and selector means 16" to thereby allow selection of different treatment solutions. As discussed in [1.3], in the resulting system, Karasiuk's handpiece and Palmer's reservoirs (first and at least one additional containers) are each connected to Palmer's "liquid solution coupling and

selector means 16" arranged at the "mobile cart 170" (collectively console; see element [1.1]). A POSITA would have recognized that when Palmer's liquid solution coupling and selector means 16 connects the handpiece to a first container (e.g., Palmer's solution reservoir 12_1), the system is configured to deliver a single treatment material from the first container to a patient's skin.

187. Karasiuk recognizes the desirability of using multiple types of skin treatment solutions during microdermabrasion. EUNSUNG-1004, [0024], [0047], [0061]. In the Karasiuk-Palmer combination, it would have been obvious to use Palmer's multiple containers to hold different treatment fluids as taught by Palmer and Karasiuk—for example, a first container may hold an antioxidant formulation (e.g., vitamin) for skin treatment and a second container may hold a hydrating formulation (e.g., lotion) for skin treatment. EUNSUNG-1004, [0061]; EUNSUNG-1005, 5:37-6:32 (explaining that the six containers may contain, respectively, an aqueous bacteriostatic rinse solution, a 1% zinc chloride solution, a 2% sodium fluoride solution, a 1.64% stannous fluoride gel, a 0.12% chlorhexidine gluconate, and a 1.7% hydrogen peroxide solution); EUNSUNG-1013, 86 ("The skin can then be rinsed with tepid water and a moisturizer with adequate sunscreen applied"); EUNSUNG-1016, Abstract ("The flux and skin deposition of vit-amin C across microdermabrasion-treated skin was approximately 20-fold higher than that across intact skin."). When only one treatment solution

(e.g., vitamin) is needed, a POSITA would have used Palmer's liquid solution coupling and selector means 16 to connect the handpiece to a first container, so that the system is configured to deliver a single treatment material from the first container to a patient's skin.

188. Thus, the Karasiuk-Palmer combination renders obvious that the skin treatment apparatus is configured to deliver a single treatment material from the first container to a patient's skin.

12. Claim 16

[16] The skin treatment apparatus of claim 11, wherein the treatment material in the first container is a skin treatment fluid.

189. It is my opinion that Karasiuk-Palmer renders obvious that the treatment material (e.g., vitamin) in the first container (e.g., Palmer's reservoir 12_1) is a skin treatment fluid. Karasiuk "pertains to pertains to dermatology, more particularly to ***skin*** treatment and conditioning." EUNSUNG-1004, [0002]; *see also* [0047] ("application of lotions/vitamins or other fluids"), [0059] ("reservoir 71 …contains lotions, vitamins and/or other skin treatment fluids to be applied to the skin through tip opening 20a."). It would have been obvious that the treatment material in the Karasiuk-Palmer system is a skin treatment fluid.

13. Claim 22

[22.pre] A system for treating skin, the system comprising:

190. It is my opinion that Karasiuk-Palmer renders obvious a system for

treating skin. See element [1.pre].

[22.1] a console configured to receive a first container and at least one additional container;

191. It is my opinion that Karasiuk-Palmer renders obvious a console (e.g., Palmer's mobile cart 170) configured to receive a first container (e.g., Palmer's reservoir 12_1) and at least one additional container (e.g., Palmer's reservoir 12_2). See elements [1.1] and [1.6].

[22.2] a collection lumen configured to be in fluid communication with the first container and the at least one additional container when the first container and the at least one additional container are connected to the console; and

192. It is my opinion that Karasiuk-Palmer renders obvious a collection lumen (e.g., Palmer's outlet passage 76 or Karasiuk's cannula 16) configured to be in fluid communication with the first container (e.g., Palmer's reservoir 12_1) and the at least one additional container (e.g., Palmer's reservoir 12_2) when the first container and the at least one additional container are connected to the console (e.g., Palmer's mobile cart 170). See elements [1.1], [1.3], and [1.6].

193. As discussed above regarding [1.3], Karasiuk-Palmer renders obvious a block (e.g., Palmer's selector valve 20, liquid solution coupling and selector means 16, and/or control unit enclosure 35) that is configured to selectively be in fluid communication with the first container and the additional container when the first container and the at least one additional container are connected to the console. A POSITA would have found it obvious that this block has a "collection

lumen" (e.g., Palmer's outlet passage 76) that is configured to selectively be in fluid communication with the first container and the additional container.

EUNSUNG-1005, Abstract, 5:1-9, 8:6-53, FIGS. 1 and 5A-5C.

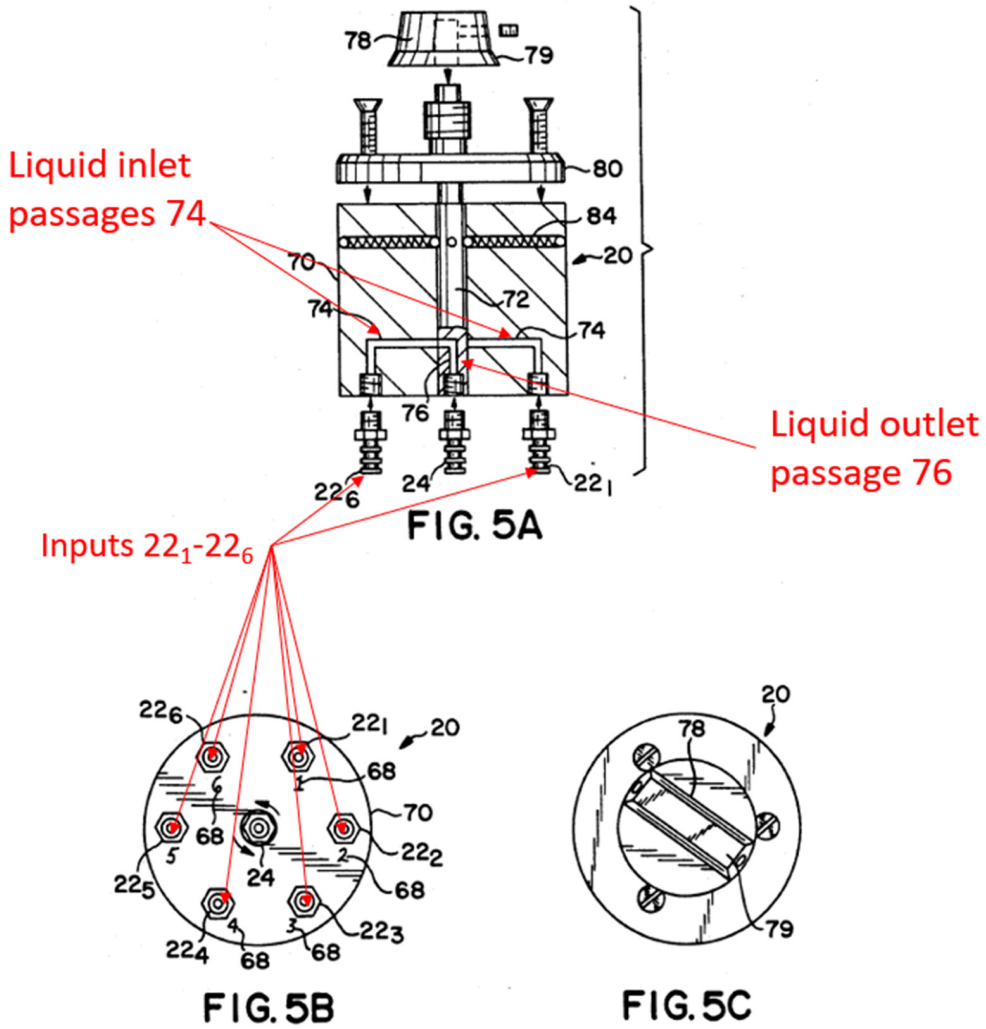

Palmer, FIGS. 5A-5C (annotated)

194. Palmer also discloses "selector valve means 20 comprises a main body 70 having a central cylinder core or stem 72 rotatably mounted therein. Six liquid inlet passages 74 are formed through the body 70, each inlet passage

opening into a respective input port 22 at its outer end, and at its inner end, into the bore which receives the rotatable core 72 in a plane common with the inner ends of the other inlet passages 74. A liquid outlet passage 76 is formed in the rotatable core 72". EUNSUNG-1005, 8:6-14. Liquid outlet passage 76, which switchable connects to each of the fluid containers through liquid inlet passages 74, is therefore directly analogous to the '287 patent's collection lumen.

195. Alternatively or in addition, a POSITA would have understood and found obvious that other fluid passages and spaces defined in Karasiuk-Palmer's system would constitute the collection ***lumen***. For example, a space within one or more of (1) Palmer's output 24, (2) Palmer's second tubing means 30, (3) Karasiuk's tube 14, and (4) Karasiuk's device 10 (e.g., Karasiuk's cannula 16) would constitute a "collection lumen." EUNSUNG-1004, [0044]-[0045], [0048], [0054], [0059], [0064], FIGS. 1A-1B and 6; EUNSUNG-1005, 5:1-9, 9:1-6, FIGS. 1 and 4. This also align with the '287 patent's disclosure of the "lumen" 90, 92 in the handpiece assembly 18. EUNSUNG-1001, 7:65-8:12.

196. Alternatively, a POSITA would have found it obvious to use a manifold containing a collection lumen to implement Palmer's switching treatment fluids, by using a separate control for each treatment fluid. Indeed, using a manifold containing a collection lumen for selecting between different treatment fluids by using a separate control for each treatment fluid was well-known and

would have been within a POSITA's general knowledge. EUNSUNG-1020, Abstract, 6:18-26, 7:39-56, 8:17-26, FIGS. 1-4 (showing trunk tube 32); EUNSUNG-1009, Abstract, 4:14-52, FIGS. 1-3 (showing trunk tube 32); EUNSUNG-1021, Abstract, 1:52-53, 2:17-21, 4:57-65, FIG. 1 (showing manifold fluid tube 16); EUNSUNG-1023, Abstract, FIGS. 1-2 (showing in-line flow channel 22). Based on this general knowledge, a POSITA would have found it obvious to implement Palmer's functionality using a manifold containing a collection lumen for selecting between different treatment fluids by using a separate control for each treatment fluid.

197. Karasiuk discloses: "Upon forming the vacuum loop as described above, the fluid contents in fluid reservoir 70 are drawn through tube 14 and into device 10 where they flow out of **the cannula 16** through openings 16d and are applied to the skin." EUNSUNG-1004, [0064], FIGS. 1A-1B. Specifically, Karasiuk discloses:

> Upon forming the vacuum loop as described above, the fluid contents in fluid reservoir 70 are drawn through tube 14 and into device 10 **where they flow out of the cannula 16 through openings 16d and are applied to the skin**. A targeted area of the skin (which is defined by the perimeter of the opening 20a is drawn up into the tip 20 and a central portion of the targeted area of skin is drawn into contact with abrasive member 24, while portions of the targeted area surrounding the central portion are treated with the fluid contents. As the user or operator of the device 10 glides the tip 20 over the surface of the skin, the targeted area in contact with the abrasive surface 24 is scraped over the abrasive surface wherein microdermabrasion of that

> portion of the skin is performed. Continued movement of the tip over the skin likewise continues the microdermabrasion of the targeted area, which changes along with the movement of the tip.

EUNSUNG-1004, [0064].

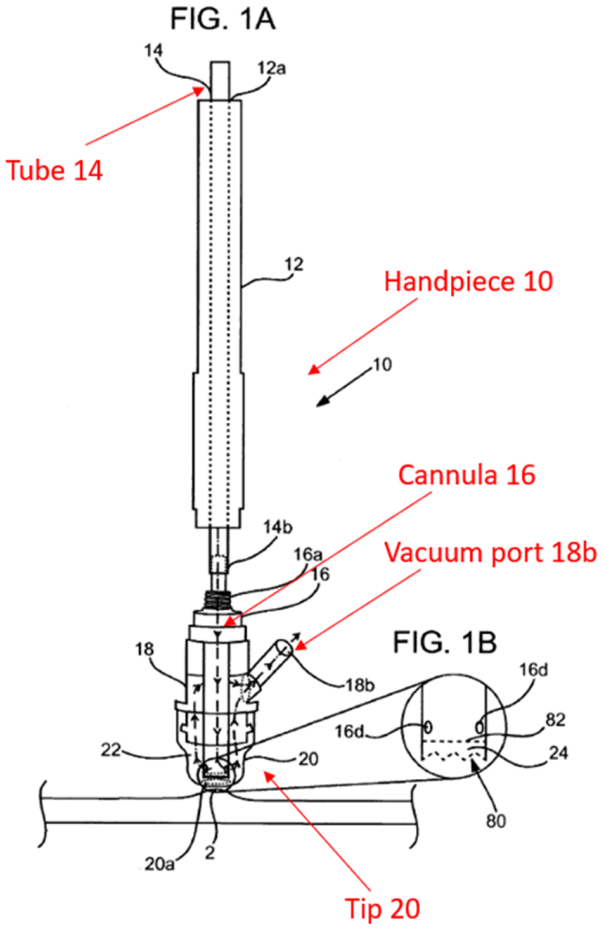

Karasiuk, FIGS. 1A-1B (annotated)

198. As shown in FIGS. 1A-1B, the distal end 14b of tube 14 is connected to cannula 16, which is adapted to be fixed to handle 12 and runs through the center of the handpiece. EUNSUNG-1004, [0045]. A treatment tip 20 (fitted over the end of vacuum head based 18) is smooth surfaced and adapted to glide over the skin surface for application of lotions/vitamins or other fluids thereto through an

opening 20a. EUNSUNG-1004, [0047]. Cannula 16 mate with vacuum head base 18 to form an annulus 22 therebetween. EUNSUNG-1004, [0048]. A passageway 16c runs the full length of cannula 15 and forms a continuation of the flow path defined by tube 14, ending in the distal end at an abrasive member 24. EUNSUNG-1004, [0048]. One or more openings 16d are provided through the wall of the distal tubular structure of cannula 16 to establish one or more flow pathways between passageway 16c and annulus 22. EUNSUNG-1004, [0053].

199. A vacuum port 18b is provided in vacuum head base 18 for connection of a vacuum source, which applies vacuum when opening 20a is sealed off by placing it up against the skin, forming a closed loop vacuum flow path. EUNSUNG-1004, [0054]. This flow path is shown in FIG. 1A. *Id*. As shown, the vacuum draws the treatment material to sequentially flow through tube 14, passageway 16c, opening(s) 16d, annulus 22, and vacuum opening 18b. *Id*.; FIG. 1A. Upon forming this vacuum loop, the fluid contents in fluid reservoir 70 are drawn through tube 14 and into device 10 where they flow out of the cannula 16 through openings 16d and are applied to the skin. EUNSUNG-1004, [0064]. As the flow of the fluids continues out of the vacuum head base and into vacuum line 42, it carries with it the exfoliated skin particles and any other waste that is removed through the microdermabrasion process. EUNSUNG-1004, [0066].

200. Thus, the Karasiuk-Palmer combination renders it obvious that the

combined device has a collection lumen (e.g., Palmer's outlet passage 76 or Karasiuk's cannula 16) configured to be in fluid communication with the first container (e.g., Palmer's reservoir 12_1) and the at least one additional container (e.g., Palmer's reservoir 12_2) when the first container and the at least one additional container are connected to the console.

[22.3] a handpiece having a working end, the working end of the handpiece being configured to contact skin tissue of a subject during use;

201. It is my opinion that Karasiuk-Palmer renders obvious a handpiece (e.g., Karasiuk's device 10) having a working end (e.g., Karasiuk's treatment tip 20), the working end of the handpiece being configured to contact skin tissue of a subject during use. Karasiuk discloses: "Device 10 is designed to be **handheld by a user** for its application to the skin of a patient in the performance of microdermabrasion or other vacuum therapy application." EUNSUNG-1004, [0044]. Karasiuk also discloses: "**A treatment tip 20 is fitted over the end of vacuum head** base 18…is smooth surfaced and adapted to glide over the skin surface for application of lotions/vitamins or other fluids thereto during processing." EUNSUNG-1004, [0047]. Karasiuk discloses: "device 10 is positioned so as to place tip 20 in contact with the skin surface." EUNSUNG-1004, [0063], FIGS. 1A-1B.

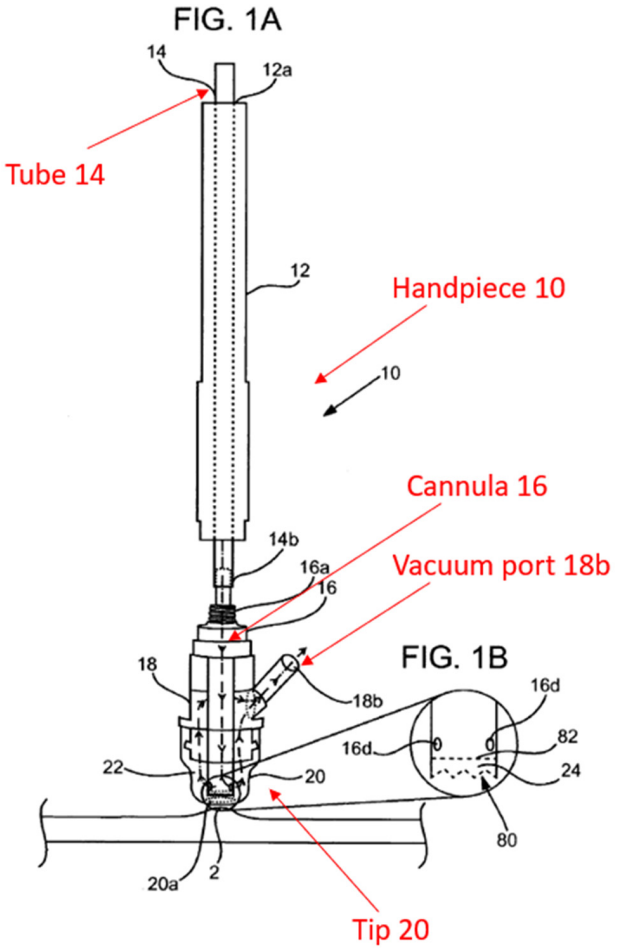

Karasiuk, FIGS. 1A-1B (annotated)

202. As shown in FIGS. 1A-1B, the distal end 14b of tube 14 is connected to cannula 16, which is adapted to be fixed to handle 12 and runs through the center of the handpiece. EUNSUNG-1004, [0045]. A treatment tip 20 (fitted over the end of vacuum head based 18) is smooth surfaced and adapted to glide over the skin surface for application of lotions/vitamins or other fluids thereto through an opening 20a. EUNSUNG-1004, [0047]. Cannula 16 mate with vacuum head base 18 to form an annulus 22 therebetween. EUNSUNG-1004, [0048]. A passageway

16c runs the full length of cannula 15 and forms a continuation of the flow path defined by tube 14, ending in the distal end at an abrasive member 24. EUNSUNG-1004, [0048]. One or more openings 16d are provided through the wall of the distal tubular structure of cannula 16 to establish one or more flow pathways between passageway 16c and annulus 22. EUNSUNG-1004, [0053].

203. A vacuum port 18b is provided in vacuum head base 18 for connection of a vacuum source, which applies vacuum when opening 20a is sealed off by placing it up against the skin, forming a closed loop vacuum flow path. EUNSUNG-1004, [0054]. This flow path is shown in FIG. 1A. *Id*. As shown, the vacuum draws the treatment material to sequentially flow through tube 14, passageway 16c, opening(s) 16d, annulus 22, and vacuum opening 18b. *Id*.; FIG. 1A. Upon forming this vacuum loop, the fluid contents in fluid reservoir 70 are drawn through tube 14 and into device 10 where they flow out of the cannula 16 through openings 16d and are applied to the skin. EUNSUNG-1004, [0064]. As the flow of the fluids continues out of the vacuum head base and into vacuum line 42, it carries with it the exfoliated skin particles and any other waste that is removed through the microdermabrasion process. EUNSUNG-1004, [0066].

204. Thus, the Karasiuk-Palmer combination renders obvious a handpiece (e.g., Karasiuk's device 10) having a working end (e.g., Karasiuk's treatment tip 20), the working end of the handpiece being configured to contact skin tissue of a

subject during use.

[22.4] wherein the working end of the handpiece is configured to be placed in fluid communication with a vacuum source to create a suction force along a distal end of the handpiece when the vacuum source is activated and the handpiece is connected to the console and wherein the working end of the handpiece is configured to be placed in fluid communication with the first container or the at least one additional container through the collection lumen; and

205. It is my opinion that Karasiuk-Palmer renders obvious that the working end (e.g., Karasiuk's treatment tip 20) of the handpiece (e.g., Karasiuk's device 10) is configured to be placed in fluid communication with a vacuum source (e.g., Karasiuk's vacuum source 40) to create a suction force along a distal end of the handpiece when the vacuum source is activated and the handpiece is connected to the console (e.g., Palmer's mobile cart 170) and wherein the working end of the handpiece is configured to be placed in fluid communication with the first container (e.g., Palmer's reservoir 12_1) or the at least one additional container (e.g., Palmer's reservoir 12_2) through the collection lumen (e.g., Palmer's outlet passage 76 or Karasiuk's cannula 16). See elements [1.1], [1.4]-[1.7], and [22.2]-[22.3]. Further, as I noted in [11.6], Karasiuk-Palmer's ***vacuum source*** 40 is connected to the handheld device 10 (***handpiece***) to pump treatment solutions and remove waste/debris by creating a vacuum (***suction force***) along the device's tip 20 (***distal end of the handpiece***). EUNSUNG-1004, [0054], [0066], [0047], FIG. 1A. Further, Karasiuk discloses: "device 10 is positioned so as to place tip 20 in contact

with the skin surface to be microabraded and the vacuum source is turned on to establish a vacuum within the system 30." EUNSUNG-1004, [0063], FIG. 6. Karasiuk discloses: "Upon forming the vacuum loop as described above, the fluid contents in fluid reservoir 70 are drawn through tube 14 and into device 10 where they flow out of the cannula 16 through openings 16d and are applied to the skin." EUNSUNG-1004, [0064], FIG. 6. FIGS. 1A-1B also show that cannula 16 is connected to vacuum source 40 via vacuum port 18b. EUNSUNG-1004, FIGS.1A-1B and [0054].

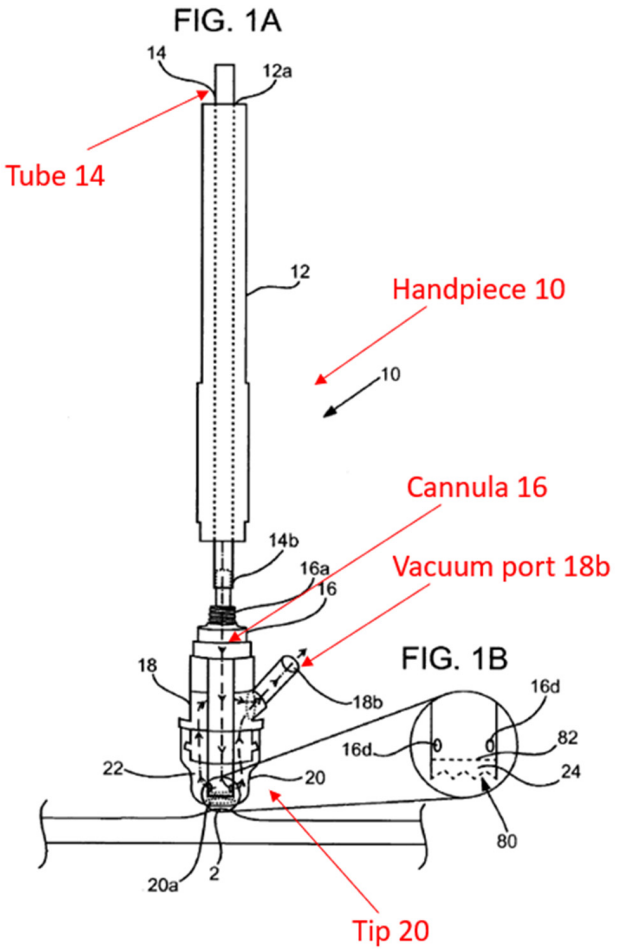

Karasiuk, FIGS. 1A-1B (annotated)

206. As shown in FIGS. 1A-1B, the distal end 14b of tube 14 is connected to cannula 16, which is adapted to be fixed to handle 12 and runs through the center of the handpiece. EUNSUNG-1004, [0045]. A treatment tip 20 (fitted over the end of vacuum head based 18) is smooth surfaced and adapted to glide over the skin surface for application of lotions/vitamins or other fluids thereto through an opening 20a. EUNSUNG-1004, [0047]. Cannula 16 mate with vacuum head base 18 to form an annulus 22 therebetween. EUNSUNG-1004, [0048]. A passageway 16c runs the full length of cannula 15 and forms a continuation of the flow path defined by tube 14, ending in the distal end at an abrasive member 24. EUNSUNG-1004, [0048]. One or more openings 16d are provided through the wall of the distal tubular structure of cannula 16 to establish one or more flow pathways between passageway 16c and annulus 22. EUNSUNG-1004, [0053].

207. A vacuum port 18b is provided in vacuum head base 18 for connection of a vacuum source, which applies vacuum when opening 20a is sealed off by placing it up against the skin, forming a closed loop vacuum flow path. EUNSUNG-1004, [0054]. This flow path is shown in FIG. 1A. *Id*. As shown, the vacuum draws the treatment material to sequentially flow through tube 14, passageway 16c, opening(s) 16d, annulus 22, and vacuum opening 18b. *Id*.; FIG. 1A. Upon forming this vacuum loop, the fluid contents in fluid reservoir 70 are

drawn through tube 14 and into device 10 where they flow out of the cannula 16 through openings 16d and are applied to the skin. EUNSUNG-1004, [0064]. As the flow of the fluids continues out of the vacuum head base and into vacuum line 42, it carries with it the exfoliated skin particles and any other waste that is removed through the microdermabrasion process. EUNSUNG-1004, [0066].

208. Palmer also discloses that a space within selector valve means 20 (e.g., outlet passage 76) connects the handpiece to the selected container (e.g., one of reservoirs 12_1-12_6). EUNSUNG-1005, Abstract ("**a selector valve** for fluidly coupling the handpiece to a selected one of the liquid solutions"), 5:1-9 ("second tubing means 30 for fluidly coupling the output 24 of the selector valve means to the handpiece means 14"), 8:6-53 ("outlet passage 76 is formed in the rotatable core 72 having one end opening into the selector valve output port 24"), FIG. 1, FIGS. 5A-5C.

209. Thus, the Karasiuk-Palmer combination renders it obvious that the working end (e.g., Karasiuk's tip 20) of the handpiece is configured to be placed in fluid communication with a vacuum source (e.g., Karasiuk's vacuum source 40) to create a suction force along a distal end of the handpiece when the vacuum source is activated and the handpiece is connected to the console and wherein the working end of the handpiece is configured to be placed in fluid communication with the first container (e.g., Palmer's reservoir 12_1) or the at least one additional container

(e.g., Palmer's reservoir 12_2) through the collection lumen (e.g., Palmer's outlet passage 76 or Karasiuk's cannula 16).

[22.5] a supply conduit that places the collection lumen in fluid communication with the working end of the handpiece when the handpiece is connected to the console;

210. It is my opinion that Karasiuk-Palmer renders obvious a supply conduit (e.g., Karasiuk's tube 16, passageway 16c and/or opening 16d) that places the collection lumen (e.g., Palmer's outlet passage 76 or Karasiuk's cannula 16) in fluid communication with the working end (e.g., Karasiuk's tip 20) of the handpiece when the handpiece is connected to the console (e.g., Palmer's mobile cart 170). See elements [22.2] and [22.4]. Karasiuk discloses: "Upon forming the vacuum loop as described above, the fluid contents in fluid reservoir 70 are drawn through tube 14 and into device 10 where they flow out of the cannula 16 through openings 16d and are applied to the skin." EUNSUNG-1004, [0064], FIG. 6. FIGS. 1A-1B also show that cannula 16 is in fluid communication with tip 20 through passageway 16c and opening 16d. EUNSUNG-1004, FIGS.1A-1B, [0048], [0053], [0054], [0064].

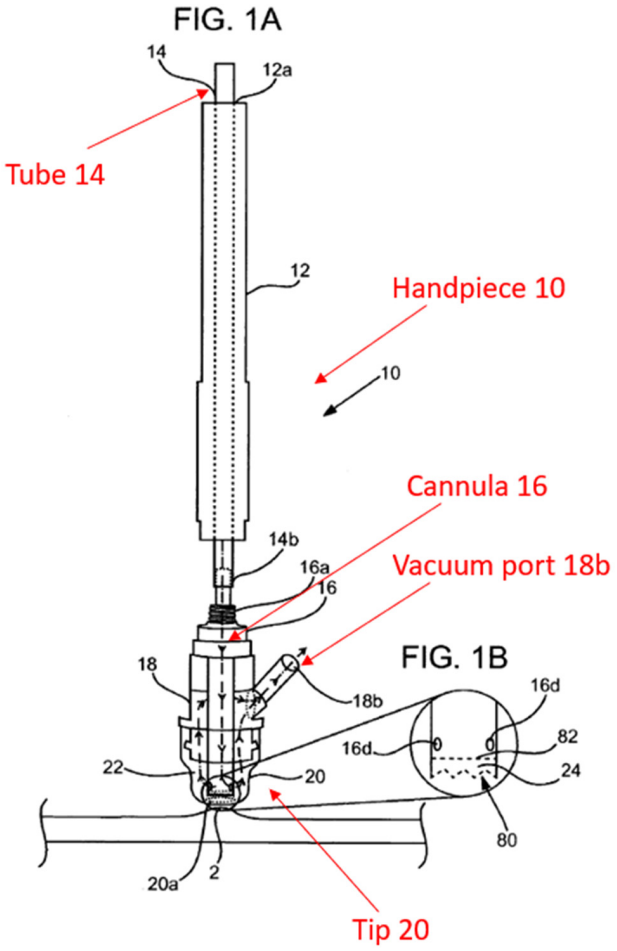

Karasiuk, FIGS. 1A-1B (annotated)

211. As shown in FIGS. 1A-1B, the distal end 14b of tube 14 is connected to cannula 16, which is adapted to be fixed to handle 12 and runs through the center of the handpiece. EUNSUNG-1004, [0045]. A treatment tip 20 (fitted over the end of vacuum head based 18) is smooth surfaced and adapted to glide over the skin surface for application of lotions/vitamins or other fluids thereto through an opening 20a. EUNSUNG-1004, [0047]. Cannula 16 mate with vacuum head base 18 to form an annulus 22 therebetween. EUNSUNG-1004, [0048]. A passageway

16c runs the full length of cannula 15 and forms a continuation of the flow path defined by tube 14, ending in the distal end at an abrasive member 24. EUNSUNG-1004, [0048]. One or more openings 16d are provided through the wall of the distal tubular structure of cannula 16 to establish one or more flow pathways between passageway 16c and annulus 22. EUNSUNG-1004, [0053].

212. A vacuum port 18b is provided in vacuum head base 18 for connection of a vacuum source, which applies vacuum when opening 20a is sealed off by placing it up against the skin, forming a closed loop vacuum flow path. EUNSUNG-1004, [0054]. This flow path is shown in FIG. 1A. *Id*. As shown, the vacuum draws the treatment material to sequentially flow through tube 14, passageway 16c, opening(s) 16d, annulus 22, and vacuum opening 18b. *Id*.; FIG. 1A. Upon forming this vacuum loop, the fluid contents in fluid reservoir 70 are drawn through tube 14 and into device 10 where they flow out of the cannula 16 through openings 16d and are applied to the skin. EUNSUNG-1004, [0064]. As the flow of the fluids continues out of the vacuum head base and into vacuum line 42, it carries with it the exfoliated skin particles and any other waste that is removed through the microdermabrasion process. EUNSUNG-1004, [0066].

213. Palmer also discloses that a space within selector valve means 20 (e.g., outlet passage 76) connects the handpiece to the selected container (e.g., one of reservoirs 12_1-12_6). EUNSUNG-1005, Abstract ("**a selector valve** for fluidly

coupling the handpiece to a selected one of the liquid solutions"), 5:1-9 ("second tubing means 30 for fluidly coupling the output 24 of the selector valve means to the handpiece means 14"), 8:6-53 ("outlet passage 76 is formed in the rotatable core 72 having one end opening into the selector valve output port 24"), FIG. 1, FIGS. 5A-5C.

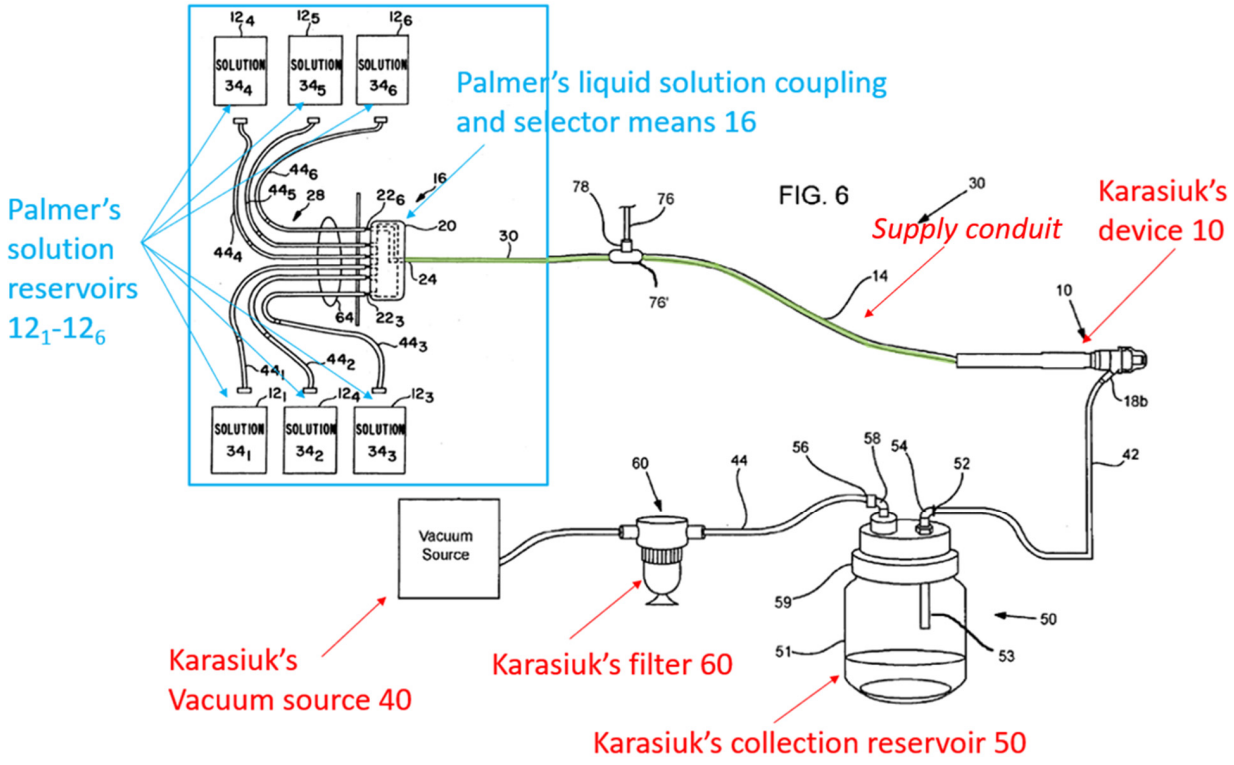

Modified FIG. 6 of Karasiuk (annotated)

214. Thus, the Karasiuk-Palmer combination renders obvious a supply conduit (e.g., Karasiuk's tube 16, passageway 16c and/or opening 16d) that places the collection lumen (e.g., Palmer's outlet passage 76 or Karasiuk's cannula 16) in fluid communication with the working end (e.g., Karasiuk's tip 20) of the handpiece when the handpiece is connected to the console.

[22.6] wherein each of the first container and the at least one additional container includes treatment materials, and wherein treatment materials from the first container and the at least one additional container are configured to be delivered to the supply conduit sequentially when the first container and the at least one additional container are connected to the console.

215. It is my opinion that Karasiuk-Palmer renders obvious that each of the first container (e.g., Palmer's reservoir 12_1) and the at least one additional container (e.g., Palmer's reservoir 12_2) includes treatment materials, and wherein treatment materials from the first container and the at least one additional container are configured to be delivered to the supply conduit (e.g., Karasiuk's passageway 16c and/or opening 16d) sequentially when the first container and the at least one additional container are connected to the console. See elements [1.1], [1.6], and [1.8].

216. It is my opinion that a POSITA would have understood that the term "sequentially" only requires that a first treatment fluid and a second treatment fluid be delivered one after another, as opposed to "simultaneously," and does not require automatic switching between treatment fluids. However, to the extent that this term is interpreted to require automatic switching between treatment fluids, this feature is obvious in view of knowledge of the POSITA. For example, Trueba discloses "[c]omputerized control of medication dosing, **which may be programmed by medical personnel for subsequent automated delivery**, can help avoid toxic drug interactions, overdoses, and deaths." EUNSUNG-1008, 6:6-

9. As another example, Wunsch discloses that the user can program the sequencer timer 13 to automatically operate the valves 40 to achieve automatic switching between different solutions and sequential delivery of different solutions. EUNSUNG-1020, 9:36-10:64.

14. Claim 23

[23.1] The system of claim 22, wherein the console comprises the vacuum source;

217. It is my opinion that Karasiuk-Palmer renders obvious that the console (e.g., Palmer's mobile cart 170) comprises the vacuum source (Karasiuk's vacuum source 40). See element [1.4].

[23.2] wherein the handpiece is in fluid communication with the vacuum source and a waste container through a waste conduit when the handpiece and the waste container are connected to the console; and

218. It is my opinion that Karasiuk-Palmer renders obvious that the handpiece (e.g., Karasiuk's device 10) is in fluid communication with the vacuum source (Karasiuk's vacuum source 40) and a waste container (Karasiuk's collection reservoir 50) through a waste conduit (e.g., Karasiuk's vacuum line 42 or collectively, Karasiuk's vacuum line 42, input 52, elbow 54, collection reservoir 50, elbow 58, output 56, second vacuum line 44, and filter 60) when the handpiece and the waste container are connected to the console. See elements [1.1], [1.7], and [11.3].

219. As shown in Karasiuk's FIG. 6, handpiece 10 is connected to

collection reservoir 50 and vacuum source 40 by vacuum line 42. EUNSUNG-1004, [0056]. Karasiuk discloses: "As the flow of the fluids continues out of the vacuum head base and into vacuum line 42, it carries with it the exfoliated skin particles and any other waste that is removed through the microdermabrasion process." EUNSUNG-1004, [0066].

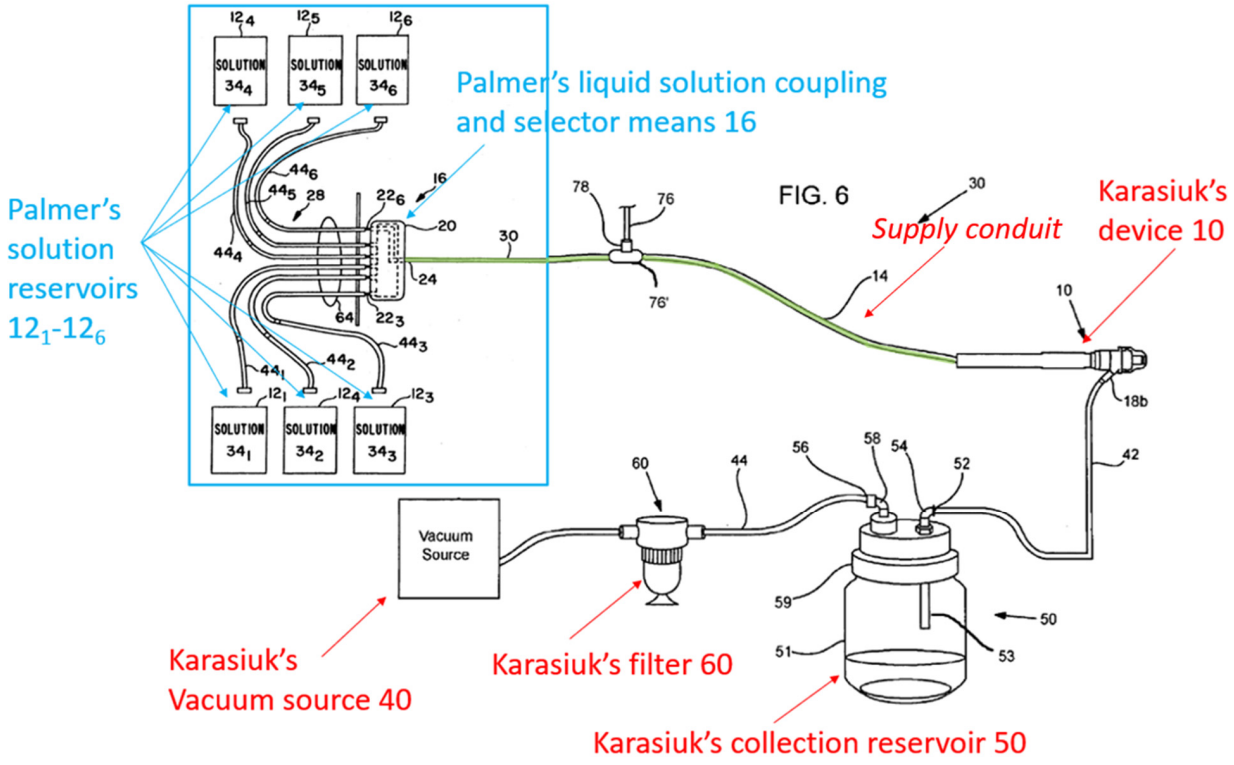

Modified FIG. 6 of Karasiuk (annotated)

220. Thus, the Karasiuk-Palmer combination renders it obvious that the handpiece (e.g., Karasiuk's device 10) is in fluid communication with the vacuum source (Karasiuk's vacuum source 40) and a waste container (e.g., Karasiuk's collection reservoir 50) through a waste conduit (e.g., Karasiuk's vacuum line 42 or collectively, Karasiuk's vacuum line 42, input 52, elbow 54, collection reservoir

50, elbow 58, output 56, second vacuum line 44, and filter 60) when the handpiece and the waste container are connected to the console.

[23.3] wherein the system is configured to deliver a first treatment fluid contained in the first container and an additional treatment fluid contained in the at least one additional container to the handpiece sequentially or simultaneously when the first container and the at least one additional container are connected to the console.

221. It is my opinion that Karasiuk-Palmer renders obvious that the system is configured to deliver a first treatment fluid (e.g., vitamin) contained in the first container (e.g., Palmer's reservoir 12_1) and an additional treatment fluid (e.g., lotion) contained in the at least one additional container (e.g., Palmer's reservoir 12_1) to the handpiece (Karasiuk's device 10) sequentially or simultaneously when the first container and the at least one additional container are connected to the console. See elements [1.1] [1.3], [1.6], and [1.8].

222. Alternatively, a POSITA would have found it obvious to configure Karasiuk-Palmer to achieve sequential or simultaneous delivery of treatment fluids from the first container and at least one additional container. For example, Trueba discloses: "… one or more of the bioactive agents from the reservoirs 54, 56 can be delivered from dispenser 30. The multiple bioactive agents may be administered sequentially or simultaneously." Trueba 11:21-24.

15. Claim 26

[26.pre] A system for treating skin, the system comprising:

223. It is my opinion that Karasiuk-Palmer renders obvious a system for

treating skin. See element [1.pre].

[26.1] a console configured to receive a first container and at least one additional container;

224. It is my opinion that Karasiuk-Palmer renders obvious a console (e.g., Palmer's mobile cart 170) configured to receive a first container (e.g., Palmer's reservoir 12_1) and at least one additional container (e.g., Palmer's reservoir 12_2). See elements [1.1] and [1.6].

[26.2] a handpiece configured to contact skin tissue of a subject; and

225. It is my opinion that Karasiuk-Palmer renders obvious a handpiece (e.g., Karasiuk's device 10) configured to contact skin tissue of a subject. See element [1.2].

[26.3] a block in the console, wherein the block is: configured to selectively receive fluid from the first container when the first container is connected to the console; configured to selectively receive fluid from the at least one additional container when the at least one additional container is connected to the console; and, configured to selectively be in fluid communication with the handpiece through a first conduit when the handpiece is connected to the console; and

226. It is my opinion that Karasiuk-Palmer renders obvious a block (e.g., Palmer's control unit enclosure 35) in the console (e.g., Palmer's mobile cart 170), wherein the block is: configured to selectively receive fluid from the first container (e.g., Palmer's reservoir 12_1) when the first container is connected to the console; configured to selectively receive fluid from the at least one additional container (e.g., Palmer's reservoir 12_2) when the at least one additional container is connected to the console; and, configured to selectively be in fluid communication

with the handpiece through a first conduit (e.g., Karasiuk's tube 14 or collectively Palmer's second tubing means 30, Karasiuk's T joint 76' and Karasiuk's tube 14) when the handpiece is connected to the console. See elements [1.1], [1.3], and [1.6].

[26.4] a vacuum source;

227. It is my opinion that Karasiuk-Palmer renders obvious a vacuum source (e.g., Karasiuk's vacuum source 40). See element [1.4].

[26.5] wherein the handpiece is configured to be in fluid communication with the vacuum source through a second conduit when the handpiece is connected to the console;

228. It is my opinion that Karasiuk-Palmer renders obvious that the handpiece (e.g., Karasiuk's device 10) is configured to be in fluid communication with the vacuum source (e.g., Karasiuk's vacuum source 40) through a second conduit (e.g., Karasiuk's vacuum line 42 or collectively, Karasiuk's vacuum line 42, input 52, elbow 54, collection reservoir 50, elbow 58, output 56, second vacuum line 44, and filter 60) when the handpiece is connected to the console. See element [1.5].

[26.6] wherein the at least one additional container comprises a second container and a third container such that the console is configured to receive at least three containers; and

229. It is my opinion that Karasiuk-Palmer renders obvious that the at least one additional container comprises a second container (e.g., Palmer's reservoir 12_2) and a third container (e.g., Palmer's reservoir 12_3) such that the console (e.g.,

Palmer's mobile cart 170) is configured to receive at least three containers (e.g., Palmer's reservoirs 12_1-12_3). See element [2].

[26.7] wherein when the handpiece is connected to the console and the first container, the second container and the third container each contains fluid and is connected to the console, the system is configured to deliver to the handpiece one at a time fluid contained in the first container, fluid contained in the second container, and fluid contained in the third container.

230. It is my opinion that Karasiuk-Palmer renders obvious that when the handpiece (e.g., Karasiuk's device 10) is connected to the console (e.g., Palmer's mobile cart 170) and the first container (e.g., Palmer's reservoir 12_1), the second container (e.g., Palmer's reservoir 12_2) and the third container (e.g., Palmer's reservoir 12_3) each contains fluid and is connected to the console, the system is configured to deliver to the handpiece one at a time fluid contained in the first container, fluid contained in the second container, and fluid contained in the third container. See elements [1.1], [1.8], and [3].

231. As discussed above regarding element [1.8], the Karasiuk-Palmer combination renders it obvious that the system is configured to deliver the first treatment fluid contained in the first container (e.g., Palmer's reservoir 12_1) and the additional treatment fluid contained in the at least one additional container (e.g., Palmer's reservoir 12_2) to the handpiece sequentially.

232. Palmer discloses: "When treatment with the particular irrigating solution is completed, **the system can be either switched to another solution**, or

the selector knob may be turned to select the flush solution." Palmer 11:9-12. Palmer also discloses: "**a patient may be treated with two or more solutions during the same procedure, one after the other**." EUNSUNG-1005, 6:46-51.

233. Thus, in the event that treatment solution from a third container (e.g., Palmer's solution reservoir 12_3) is desirable, it would have been obvious that the system is configured to deliver to the handpiece one at a time fluid contained in the first container (e.g., Palmer's solution reservoir 12_1), fluid contained in the second container (e.g., Palmer's solution reservoir 12_2), and fluid contained in the third container.

16. Claim 28

[28.1] The system of claim 26, wherein the console comprises the vacuum source; and

234. It is my opinion that Karasiuk-Palmer renders obvious that the console (e.g., Palmer's mobile cart 170) comprises the vacuum source (e.g., Karasiuk's vacuum source 40). See element [1.4].

[28.2] wherein the handpiece is in fluid communication with the vacuum source and a waste container through the second conduit when the handpiece is connected to the console.

235. It is my opinion that Karasiuk-Palmer renders obvious that the handpiece (e.g., Karasiuk's device 10) is in fluid communication with the vacuum source (e.g., Karasiuk's vacuum source 40) and a waste container (e.g., Karasiuk's collection reservoir 50) through the second conduit (e.g., Karasiuk's vacuum line

42 or collectively, Karasiuk's vacuum line 42, input 52, elbow 54, collection reservoir 50, elbow 58, output 56, second vacuum line 44, and filter 60) when the handpiece is connected to the console. See elements [1.1] and [1.5]-[1.7].

17. Claim 29

[29] The system of claim 26, wherein the system is configured to deliver a first treatment fluid contained in the first container and an additional treatment fluid contained in the at least one additional container to the handpiece sequentially when the handpiece is connected to the console.

236. It is my opinion that Karasiuk-Palmer renders obvious that the system is configured to deliver a first treatment fluid (e.g., vitamin) contained in the first container (e.g., Palmer's solution reservoir 12_1) and an additional treatment fluid (e.g., lotion) contained in the at least one additional container (e.g., Palmer's solution reservoir 12_2) to the handpiece (e.g., Karasiuk's device 10) sequentially when the handpiece is connected to the console. See elements [1.1], [1.3], [1.5]-[1.6], [1.8], and [8].

18. Claim 34

[34] The system of claim 26, wherein the block is configured to control a flow of a first treatment fluid contained in the first container and an additional treatment fluid contained in the at least one additional container into the block with a valve when the first container and the at least one additional container are connected to the console.

237. It is my opinion that Karasiuk-Palmer renders obvious that the block (e.g., Palmer's control unit enclosure 35) is configured to control a flow of a first treatment fluid (e.g., vitamin) contained in the first container (e.g., Palmer's

solution reservoir 12_1) and an additional treatment fluid (e.g., lotion) contained in the at least one additional container (e.g., Palmer's solution reservoir 12_1) into the block with a valve (e.g., Palmer's selector valve means 20) when the first container and the at least one additional container are connected to the console. See elements [1.1], [1.3], [1.6], [1.8], and [8].

19. Claim 35

[35] The system of claim 26, wherein the system is configured to control a flow of a first treatment fluid contained in the first container to the handpiece through the block when each of the first container and the handpiece is connected to the console.

238. It is my opinion that Karasiuk-Palmer renders obvious that the system is configured to control a flow of a first treatment fluid (e.g., vitamin) contained in the first container (e.g., Palmer's solution reservoir 12_1) to the handpiece (e.g., Karasiuk's device 10) through the block (e.g., Palmer's control unit enclosure 35) when each of the first container and the handpiece is connected to the console. See element [9].

20. Claim 36

[36] The system of claim 35, wherein the system is configured to separately control a flow of a second treatment fluid contained in the at least one additional container to the handpiece through the block when each of the first container, the at least one additional container, and the handpiece are connected to the console.

239. It is my opinion that Karasiuk-Palmer renders obvious that the system is configured to separately control a flow of a second treatment fluid (e.g., lotion)

contained in the at least one additional container (e.g., Palmer's solution reservoir 12_2) to the handpiece (e.g., Karasiuk's device 10) through the block (e.g., Palmer's control unit enclosure 35) when each of the first container, the at least one additional container, and the handpiece are connected to the console. See element [10].

21. Claim 37

[37.pre] A system for treating skin, the system comprising:

240. It is my opinion that Karasiuk-Palmer renders obvious a system for treating skin. See element [1.pre].

[37.1] a console configured to receive a first container and at least one additional container;

241. It is my opinion that Karasiuk-Palmer renders obvious a console (e.g., Palmer's mobile cart 170) configured to receive a first container (e.g., Palmer's reservoir 12_1) and at least one additional container (e.g., Palmer's reservoir 12_2). See elements [1.1] and [1.6].

[37.2] a handpiece configured to contact skin tissue of a subject; and

242. It is my opinion that Karasiuk-Palmer renders obvious a handpiece (e.g., Karasiuk's device 10) configured to contact skin tissue of a subject. See element [1.2].

[37.3] a block in the console, wherein the block is: configured to selectively receive fluid from the first container when the first container is connected to the console; configured to selectively receive fluid from the at least one additional container when the at least one additional container is connected to the console;

and, configured to selectively be in fluid communication with the handpiece through a first conduit when the handpiece is connected to the console; and

243. It is my opinion that Karasiuk-Palmer renders obvious a block (e.g., Palmer's control unit enclosure 35) in the console (e.g., Palmer's mobile cart 170), wherein the block is: configured to selectively receive fluid from the first container (e.g., Palmer's reservoir 12_1) when the first container is connected to the console; configured to selectively receive fluid from the at least one additional container (e.g., Palmer's reservoir 12_2) when the at least one additional container is connected to the console; and, configured to selectively be in fluid communication with the handpiece (e.g., Karasiuk's device 10) through a first conduit (e.g., Karasiuk's tube 14 or collectively Palmer's second tubing means 30, Karasiuk's T joint 76' and Karasiuk's tube 14) when the handpiece is connected to the console. See elements [1.3] and [1.6].

244. Palmer also discloses "selector valve means 20 comprises a main body 70 having a central cylinder core or stem 72 rotatably mounted therein. Six liquid inlet passages 74 are formed through the body 70, each inlet passage opening into a respective input port 22 at its outer end, and at its inner end, into the bore which receives the rotatable core 72 in a plane common with the inner ends of the other inlet passages 74. A liquid outlet passage 76 is formed in the rotatable core 72". EUNSUNG-1005, 8:6-14. Selector valve means 20 is directly analogous to the block of the '287 patent, having fluidic input, output, valving, switching, and

manifolding functionalities.

[37.4] a vacuum source;

245. It is my opinion that Karasiuk-Palmer renders obvious a vacuum source (e.g., Karasiuk's vacuum source 40). See element [1.4].

[37.5] wherein the handpiece is configured to be in fluid communication with the vacuum source through a second conduit when the handpiece is connected to the console;

246. It is my opinion that Karasiuk-Palmer renders obvious that the handpiece (e.g., Karasiuk's device 10) is configured to be in fluid communication with the vacuum source (e.g., Karasiuk's vacuum source 40) through a second conduit (e.g., Karasiuk's vacuum line 42 or collectively, Karasiuk's vacuum line 42, input 52, elbow 54, collection reservoir 50, elbow 58, output 56, second vacuum line 44, and filter 60) when the handpiece is connected to the console. See element [1.5].

[37.6] wherein the system is configured to control a flow of a first treatment fluid contained in the first container to the handpiece through the block when each of the first container and the handpiece is connected to the console; and

247. It is my opinion that Karasiuk-Palmer renders obvious that the system is configured to control a flow of a first treatment fluid (e.g., vitamin) contained in the first container (e.g., Palmer's reservoir 12_1) to the handpiece (e.g., Karasiuk's device 10) through the block when each of the first container and the handpiece is connected to the console. See element [9].

[37.7] wherein the system is configured to separately control a flow of a second

treatment fluid contained in the at least one additional container to the handpiece through the block when each of the first container, the at least one additional container, and the handpiece are connected to the console.

248. It is my opinion that Karasiuk-Palmer renders obvious that the system is configured to separately control a flow of a second treatment fluid (e.g., lotion) contained in the at least one additional container (e.g., Palmer's reservoir 12_2) to the handpiece (e.g., Karasiuk's device 10) through the block (e.g., Palmer's control unit enclosure 35) when each of the first container, the at least one additional container, and the handpiece are connected to the console. *See* element [10].

22. Claim 39

[39.1] The system of claim 37, wherein the console comprises the vacuum source; and

249. It is my opinion that Karasiuk-Palmer renders obvious that the console (e.g., Palmer's mobile cart 170) comprises the vacuum source (e.g., Karasiuk's vacuum source 40). See element [1.4].

[39.2] wherein the handpiece is in fluid communication with the vacuum source and a waste container through the second conduit when the handpiece is connected to the console.

250. It is my opinion that Karasiuk-Palmer renders obvious that the handpiece (e.g., Karasiuk's device 10) is in fluid communication with the vacuum source (e.g., Karasiuk's vacuum source 40) and a waste container (e.g., Karasiuk's collection reservoir 50) through the second conduit (e.g., Karasiuk's vacuum line 42 or collectively, Karasiuk's vacuum line 42, input 52, elbow 54, collection

reservoir 50, elbow 58, output 56, second vacuum line 44, and filter 60) when the handpiece is connected to the console. See element [1.5]-[1.7], [28.2].

23. Claim 40

[40] The system of claim 37, wherein the system is configured to deliver the first treatment fluid contained in the first container and the second treatment fluid contained in the at least one additional container to the handpiece sequentially when the handpiece is connected to the console.

251. It is my opinion that Karasiuk-Palmer renders obvious that the system is configured to deliver the first treatment fluid (e.g., vitamin) contained in the first container (e.g., Palmer's reservoir 12_1) and the second treatment fluid (e.g., lotion) contained in the at least one additional container (e.g., Palmer's reservoir 12_2) to the handpiece (e.g., Karasiuk's device 10) sequentially when the handpiece is connected to the console. See elements [1.1], [1.3], [1.5]-[1.6], [1.8], [8], and [29].

24. Claim 45

[45] The system of claim 37, wherein the block is configured to control the flow of the first treatment fluid contained in the first container and the second treatment fluid contained in the at least one additional container into the block with a valve when the first container and the at least one additional container are connected to the console.

252. It is my opinion that Karasiuk-Palmer renders obvious that the block (e.g., Palmer's control unit enclosure 35) is configured to control the flow of the first treatment fluid (e.g., vitamin) contained in the first container (e.g., Palmer's reservoir 12_1) and the second treatment fluid (e.g., lotion) contained in the at least one additional container (e.g., Palmer's reservoir 12_1) into the block with a valve

(e.g., Palmer's selector valve means 20) when the first container and the at least one additional container are connected to the console. See elements [1.1], [1.3], [1.6], [1.8], [8], [23.3], and [34].

XII. [GROUND 1B] – Karasiuk, Palmer, And Trueba

1. The Karasiuk-Palmer-Trueba Combination

253. In the Karasiuk-Palmer-Trueba combination, Karasiuk-Palmer's system would have been modified based on Trueba's teachings of computer control and display. For example, in the resulting system, Karasiuk-Palmer's selector means (e.g. Palmer's selector valve 20) would be further controlled by a computer (e.g., Trueba's controller 100), which is controlled by a user input (e.g., Trueba's touch screen 105), to control the flow of treatment solutions from containers (e.g., Palmer's reservoirs 12_1-12_6), so that a user can use the user input device to select a flow of fluids from the containers. The combined device also includes a display (e.g., Trueba's touch screen 105) that indicates which solution is being delivered.

254. A POSITA would have been motivated to modify Karasiuk-Palmer's system by including Trueba's computer control and display for several benefits, such as added precision (reduced human error), automation, and clarity. For example, by using Trueba's controller to control the order of different treatment materials (and displaying on the touch screen the material being administered),

Karasiuk-Palmer-Trueba reduces the chance to apply things in a wrong order.

255. As a first example, in the combination, Trueba would allow programming the resulting system to deliver different treatment materials at different times and thus allow automated delivery following complex administration protocols. EUNSUNG-1008, 3:34-38, 4:65-5:17, 6:1-9, 6:27-7:9, 10:52-11:49, FIG. 1.

256. As a second example, Trueba's techniques offer additional benefits in that "[c]omputerized control of medication dosing, which may be programmed by medical personnel for subsequent automated delivery, can help avoid toxic drug interactions, overdoses, and death." EUNSUNG-1008, 6:1-9. For example, Trueba's system can be "programmed to prevent unauthorized alteration of dosages, for example an increase in a dosage of a controlled substance above that authorized by the prescribing physician." EUNSUNG-1008, 12:2-5.

257. As a third example, the combination would further benefit from Trueba's touch screen that shows "a series of images that, when touched with a finger or stylus, program the controller 100" and that "indicate[s] which selections have been made" and displays "information such as desired dosages, frequency, and potential side effects." EUNSUNG-1008, 11:42-12:8, FIG. 3.

258. A POSITA would have had a reasonable expectation of success in implementing the combination given the technical similarities between Karasiuk,

Palmer, and Trueba. For example, Trueba discloses a system similar to Karasiuk's, which is "for topical application of a bioactive composition to the surface of the subject, such as a patch of skin." EUNSUNG-1008, 3:22-27. Trueba also discloses a system similar to Palmer's, which selects from different treatment materials from different containers. EUNSUNG-1008, 3:4-8, 5:14-26, 11:4-34, FIG. 3.

259. It is my opinion that a POSITA would have been motivated to combine Karasiuk, Palmer and Trueba with a reasonable expectation of success. In the Karasiuk-Palmer-Trueba combination ("Karasiuk-Palmer-Trueba"), the selector means (e.g., Palmer's selector valve 20) is further controlled by a computer (e.g., Trueba's controller 100), which is controlled by a user input (e.g., Trueba's touch screen 105), to control the flow of treatment solutions from containers (e.g., Palmer's reservoirs 12_1-12_6). The combined device also includes a display (e.g., Trueba's touch screen 105) that indicates which solution is being delivered.

260. Similar to Karasiuk, Trueba discloses a system "for topical application of a bioactive composition to the surface of the subject, such as a patch of skin." EUNSUNG-1008, 3:22-27. Similar to Palmer, Trueba also discloses a system that can select from different treatment materials from different containers. EUNSUNG-1008, 3:4-8, 5:14-26, 11:4-34, FIG. 3.

261. In addition, Trueba allows programming its system to deliver different

treatment materials at different times to allow automated delivery following complex administration protocols. EUNSUNG-1008, 3:34-38, 4:65-5:17, 6:1-9, 6:27-7:9, 10:52-11:49, FIG. 1. In addition to added automation and precision, Trueba's techniques also are beneficial because "[c]omputerized control of medication dosing, which may be programmed by medical personnel for subsequent automated delivery, can help avoid toxic drug interactions, overdoses, and death." EUNSUNG-1008, 6:1-9. For example, Trueba's system can be "programmed to prevent unauthorized alteration of dosages, for example an increase in a dosage of a controlled substance above that authorized by the prescribing physician." EUNSUNG-1008, 12:2-5.

262. In addition, Trueba discloses sequential or simultaneous delivery of treatment fluids from the first container and at least one additional container: "… one or more of the bioactive agents from the reservoirs 54, 56 can be delivered from dispenser 30. The multiple bioactive agents may be administered sequentially or simultaneously." Trueba 11:21-24.

263. Using Trueba's computer control, multiple compositions can be automatically dispensed simultaneously or sequentially. EUNSUNG-1008, 3:4-8, 5:18-6:9, 6:10-16 ("may be used to apply the agent to an area of skin for topical application of a bioactive composition"), 11:4-34 ("Multiple compositions can be dispensed simultaneously or sequentially"). Further, the device can be programmed

to respond to changing clinical circumstances. EUNSUNG-1008, 11:15-20 ("For example, only the corticosteroid from reservoir 52 would be administered to a subject having stable reactive airway disease. However, if symptoms persist, then the β-agonist from reservoir 50 also can be delivered."). Further, the device can be programmed to "prevent unauthorized alteration of dosages" and "permit certain ranges of dosages to be administered." EUNSUNG-1008, 12:2-9.

264. By the Critical Date, computer (e.g., PLC) controlled fluid delivery systems were well-known. EUNSUNG-1007, FIG. 3; EUNSUNG-1008, FIG. 3; EUNSUNG-1015, Abstract. Compared to manually controlled systems, computer controlled systems provide added precision and automation (e.g., automated delivery of a first treatment for a fixed time followed by a second treatment for a fixed time). EUNSUNG-1008, 11:4-34. Touch screen 105 "may include a series of images that, when touched with a finger or stylus, program the controller 100," (EUNSUNG-1008, 11:50-59, FIG. 3) and can be used to "indicate which selections have been made" and to display "information such as desired dosages, frequency, and potential side effects." EUNSUNG-1008, 11:42-49, FIG. 3; EUNSUNG-1014, Abstract, 1. Further, the touch screen can be operated to select a particular drug or dosage, or to program the controller. EUNSUNG-1008, 11:60-12:8.

265. A POSITA would have been motivated to modify the Karasiuk-Palmer combination by including Trueba's computer control and display to

provide added precision (reduce human error), automation, and clarity. A POSITA would have implemented the display and computer control with a reasonable expectation of success because this would constitute the use of a known technique to improve similar devices in the same way. In fact, the modification requires nothing more than automating the manual process in Karasiuk-Palmer with well-known automation techniques. For example, Duchon discloses: "computer 100 controls valve motor 130 through motor driver 132, and monitors position through a Position Monitor feedback signal from potentiometer 134." EUNSUNG-1010, [0098]. As another example, Greenberg discloses: "Switch 30 controls a solenoid that switches the vacuum pump from operatively being connected either to the first or second assembly." EUNSUNG-1006, [0050], FIG. 2. As another example, Armstrong discloses "the rotary selector valve 74 can be provided with a pulse activated solenoid driven stepping mechanism (not shown) such that the activation of a selector switch (not shown) on the handpiece advances the valve in a step-by-step manner to valve the desired fluid on a one step per pulse basis." EUNSUNG-1011, 7:15-20.

266. As another example, Wunsch discloses an apparatus (e.g., console 10) for sequentially dispensing a plurality of solutions through a manifold (e.g., manifold selector 17) that is connected to each of the solutions to be administered. EUNSUNG-1020, Abstract, 7:39-56, 8:17-26, FIGS. 1-4. As shown in FIG. 1, the

manifold selector 17 includes a plurality of valves 40, which control the flow of solution from the plurality of bottles 15. EUNSUNG-1020, 6:18-48, 7:16-56. In operation, the user can program the sequencer timer 13 to automatically operate the valves 40 to achieve automatic switching between different solutions and sequential delivery of different solutions. EUNSUNG-1020, 9:36-10:64. The valves 40 can be individually controlled by either reversible electric motors 48 or solenoids 59. EUNSUNG-1020, 6:18-26.

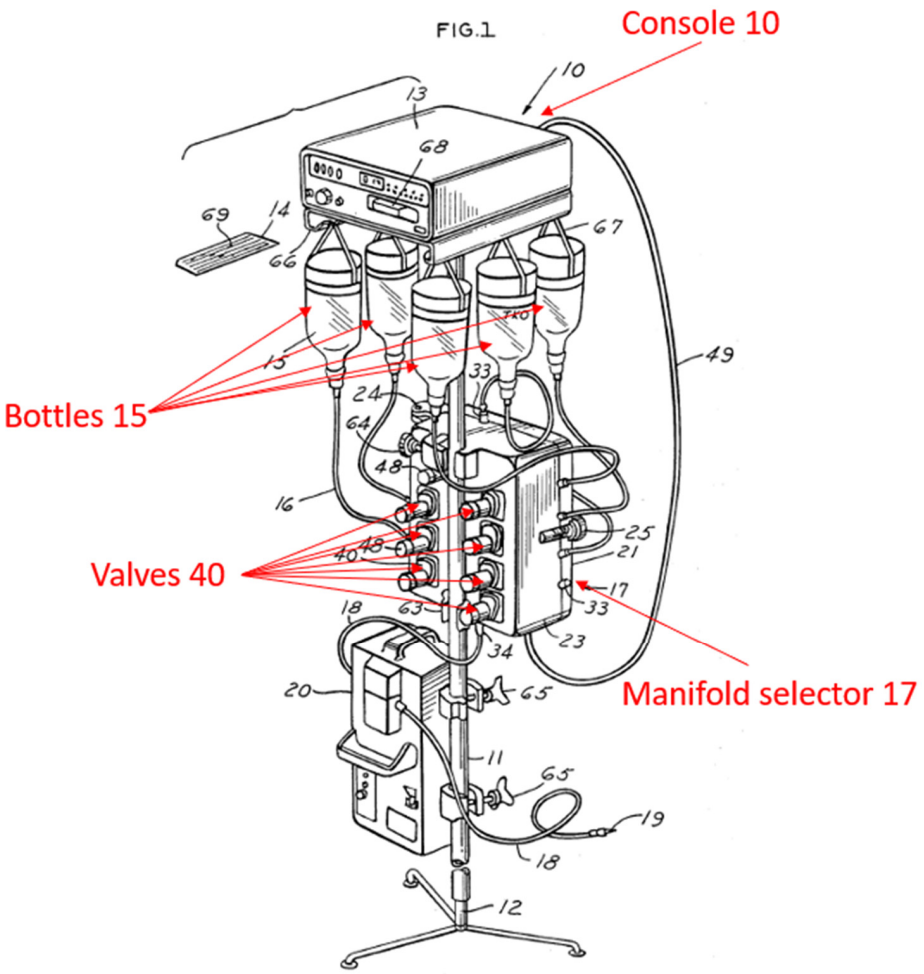

Wunsch, FIG. 1 (annotated)

267. Thus, in the Karasiuk-Palmer-Trueba combination, a POSITA would have been motivated to implement Trueba's computer control in various ways including by controlling Palmer's selector valve 20 using a stepper motor or a solenoid.

268. In the Karasiuk-Palmer-Trueba combination, the selector means (e.g., Palmer's selector valve 20) is further controlled by a computer (e.g., Trueba's controller 100), which is controlled by a user input (e.g., Trueba's touch screen 105), to control the flow of treatment solutions from containers (e.g., Palmer's reservoirs 12_1-12_6). The combined device also includes a display (e.g., Trueba's touch screen 105) that indicates which solution is being delivered.

2. Claim 1 and its Dependent Claims

269. As discussed in Section XI, Karasiuk-Palmer-Trueba renders obvious claim 1 for the same reasons discussed regarding Karasiuk-Palmer.

270. Karasiuk-Palmer-Trueba further renders obvious [1.8] based on Trueba's teachings. In particular, to the extent that the term "sequentially" is interpreted to require automatic switching between first and second treatment fluids, Karasiuk-Palmer-Trueba renders this limitation obvious. EUNSUNG-1008, 3:4-8, 5:18-6:9, 6:10-16, 11:4-34, 12:2-9.

271. It is my opinion that a POSITA would have understood that the term "sequentially" only requires that a first treatment fluid and a second treatment fluid

be delivered one after another, as opposed to "simultaneously," and does not require automatic switching between treatment fluids. However, to the extent that this term is interpreted to require automatic switching between treatment fluids, this feature is obvious in view of knowledge of the POSITA. For example, Trueba discloses "[c]omputerized control of medication dosing, **which may be programmed by medical personnel for subsequent automated delivery**, can help avoid toxic drug interactions, overdoses, and deaths." EUNSUNG-1008, 6:6-9. If the '287 patent requires the device to be capable of delivering treatment fluids from two or more fluid containers either sequentially or simultaneously, Trueba allows this functionality: "… one or more of the bioactive agents from the reservoirs 54, 56 can be delivered from dispenser 30. The multiple bioactive agents may be administered sequentially or simultaneously." Trueba 11:21-24. As another example, Wunsch discloses that the user can program the sequencer timer 13 to automatically operate the valves 40 to achieve automatic switching between different solutions and sequential delivery of different solutions. EUNSUNG-1020, 9:36-10:64.

272. To the extent that the term "sequentially" is interpreted to require automatic switching from a first treatment fluid to a second treatment fluid, the Karasiuk-Palmer-Trueba combination renders this limitation obvious.

273. Trueba discloses: "Multiple compositions can be dispensed

simultaneously or sequentially." EUNSUNG-1008, 11:4-5. For example, corticosteroid from reservoir 52 would be administered to a subject having stable reactive airway disease, but if symptoms persist, then the β-agonist from reservoir 50 also can be delivered (for example, in response to pressing an activation button or programming the applicator)." EUNSUNG-1008, 11:15-20. Trueba explains "[c]omputerized control of medication dosing, **which may be programmed by medical personnel for subsequent automated delivery**, can help avoid toxic drug interactions, overdoses, and deaths." EUNSUNG-1008, 6:6-9.

274. Using Trueba's computer control, multiple compositions can be automatically dispensed simultaneously or sequentially. EUNSUNG-1008, 3:4-8, 5:18-6:9 ("Several modules may contain the same or different bioactive compositions"), 6:10-16 ("may be used to apply the agent to an area of skin for topical application of a bioactive composition"), 11:4-34 ("Multiple compositions can be dispensed simultaneously or sequentially"). Further, the device can be programmed to respond to changing clinical circumstances. EUNSUNG-1008, 11:15-20 ("For example, only the corticosteroid from reservoir 52 would be administered to a subject having stable reactive airway disease. However, if symptoms persist, then the β-agonist from reservoir 50 also can be delivered."). Further, the device can be programmed to "prevent unauthorized alteration of dosages" and "permit certain ranges of dosages to be administered." EUNSUNG-

1008, 12:2-9.

275. As discussed above in Section XII.1, Karasiuk-Palmer-Trueba's system employs "[c]omputerized control of medication dosing, which may be programmed by medical personnel for subsequent automated delivery," as taught by Trueba. EUNSUNG-1008, 6:6-9. A POSITA would have found it obvious to employ Trueba's automation in the system of Karasiuk-Palmer provide added precision (avoiding human error), automation, and clarity, resulting in automatic switching and delivery of treatment fluids in a sequential manner.

276. As discussed above in Section XII.1, in the Karasiuk-Palmer-Trueba combination, Trueba's controller 100 is configured to control the delivery of fluids to provide added precision, automation, and clarity. Thus, the Karasiuk-Palmer-Trueba combination renders this limitation obvious. Similarly, dependent claims 2-10 that inherit the same subject matter are rendered obvious by Karasiuk-Palmer-Trueba.

3. Claims 12, 22, 23, 29, 40 and their Dependent Claims

277. As discussed in XI (Ground 1A), Karasiuk-Palmer-Trueba renders obvious claims 12, 22, 23, 29, and 40 for the same reasons as discussed regarding Karasiuk-Palmer. Karasiuk-Palmer-Trueba further renders obvious [12], [22.6], [23.3], [29] and [40] based on Trueba's teachings. In particular, as discussed above regarding [1.8], to the extent that the term "sequentially" is interpreted to require

automatic switching between first and second treatment fluids, Karasiuk-Palmer-Trueba renders such a limitation obvious. EUNSUNG-1008, 3:4-8, 5:18-6:9, 6:10-16, 11:4-34, 12:2-9. Similarly, dependent claims 24-25 that inherit the same subject matter are rendered obvious by Karasiuk-Palmer-Trueba.

4. Claims 3, 26 and their Dependent Claims

278. As discussed in XI (Ground 1A), Karasiuk-Palmer-Trueba renders obvious claims 3 and 26 for the same reasons as discussed regarding Karasiuk-Palmer. Karasiuk-Palmer-Trueba further renders obvious [3] and [26.7] based on Trueba's teachings. In particular, as discussed above regarding [1.8], to the extent that the term "one at a time" is interpreted to require automatic switching between first and second treatment fluids, Karasiuk-Palmer-Trueba renders such a limitation obvious. EUNSUNG-1008, 3:4-8, 5:18-6:9, 6:10-16, 11:4-34, 12:2-9. Similarly, dependent claims 28-36 that inherit the same subject matter are rendered obvious by Karasiuk-Palmer-Trueba.

5. Claim 4

[4] The system of claim 1, further comprising a computing device configured to control at least one function of the system.

279. It is my opinion that Karasiuk-Palmer-Trueba renders obvious a computing device (e.g., Trueba's controller 100) configured to control at least one function (e.g., delivery of fluids) of the system. As discussed above in Section XII.1, in the Karasiuk-Palmer-Trueba combination, the system comprises a

computing device (e.g., Trueba controller 100) configured to control at least one function (e.g., delivery of fluids) of the system. EUNSUNG-1008, 3:34-38, 4:65-5:17, 6:1-9, 6:27-7:9, 10:52-11:49, 12:2-5, FIG. 1.

6. Claim 5

[5] The system of claim 4, further comprising a user input device to select a flow of fluids from the first container and the at least one additional container to the handpiece.

280. It is my opinion that Karasiuk-Palmer-Trueba renders obvious a user input device (e.g., Trueba's touch screen 105) to select a flow of fluids from the first container (e.g., Palmer's reservoir 12_1) and the at least one additional container (e.g., Palmer's reservoir 12_1) to the handpiece (e.g., Karasiuk's device 10). As discussed above in Section XII.1, in the Karasiuk-Palmer-Trueba combination, the system comprises a user input device (e.g., Trueba's touch screen 105) to select a flow of fluids from the first container and the at least one additional container to the handpiece. EUNSUNG-1008, 11:42-12:8, FIG. 3.

7. Claim 6

[6] The system of claim 5, wherein the user input device comprises a touch screen.

281. It is my opinion that Karasiuk-Palmer-Trueba renders obvious that the user input device (e.g., Trueba's touch screen 105) comprises a touch screen. As discussed above in Section XII.1, in the Karasiuk-Palmer-Trueba combination, the system comprises a touch screen (e.g., Trueba's touch screen 105) to select a flow

of fluids from the first container and the at least one additional container to the handpiece.

8. Claim 7

[7] The system of claim 6, further comprising a display.

282. It is my opinion that Karasiuk-Palmer-Trueba renders obvious a display (e.g., Trueba's touch screen 105). As discussed above in Section XII.1, in the Karasiuk-Palmer-Trueba combination, the system comprises a display (e.g., Trueba's touch screen 105) that indicates which solution is being delivered.

283. In the event claim 7 is construed to require an additional display separate from the touch screen, Trueba also discloses coupling an external computer 115 to controller 100. EUNSUNG-1008, 12:9-36, FIG. 3. A POSITA would have found it obvious that this external computer 115 would include an additional display separate from Trueba's touch screen 105.

9. Claim 17

[17] The skin treatment apparatus of claim 11, further comprising a computing device configured to control at least one function of the skin treatment apparatus.

284. It is my opinion that Karasiuk-Palmer-Trueba renders obvious a computing device (e.g., Trueba's controller 100) configured to control at least one function (e.g., delivery of fluids) of the skin treatment apparatus. See element [4].

10. Claim 18

[18] The skin treatment apparatus of claim 17, further comprising a user input

device to facilitate control of a flow of treatment materials from at least one of the first container and the second container to the handpiece assembly.

285. It is my opinion that Karasiuk-Palmer-Trueba renders obvious a user input device (e.g., Trueba's touch screen 105) to facilitate control of a flow of treatment materials from at least one of the first container (e.g., Palmer's reservoir 12_1) and the second container (e.g., Palmer's reservoir 12_2) to the handpiece assembly (e.g., Karasiuk's device 10). See element [5].

11. Claim 19

[19] The skin treatment apparatus of claim 18, wherein the user input device comprises a touch screen.

286. It is my opinion that Karasiuk-Palmer-Trueba renders obvious that the user input device (e.g., Trueba's touch screen 105) comprises a touch screen. See element [6].

12. Claim 20

[20] The skin treatment apparatus of claim 19, further comprising a display.

287. It is my opinion that Karasiuk-Palmer-Trueba renders obvious a display (e.g., Trueba's touch screen 105). See element [7].

13. Claim 24

[24] The system of claim 22, further comprising a computing device configured to control at least one function of the system.

288. It is my opinion that Karasiuk-Palmer-Trueba renders obvious a computing device (e.g., Trueba's controller 100) configured to control at least one function (e.g., delivery of fluids) of the system. See element [4].

14. Claim 25

[25] The system of claim 24, further comprising a user input device to facilitate control of a flow of fluids from the first container and the at least one additional container to the handpiece.

289. It is my opinion that Karasiuk-Palmer-Trueba renders obvious a user input device (e.g., Trueba's touch screen 105) to facilitate control of a flow of fluids from the first container and the at least one additional container to the handpiece. See element [5].

15. Claim 30

[30] The system of claim 26, further comprising a computing device configured to control at least one function of the system.

290. It is my opinion that Karasiuk-Palmer-Trueba renders obvious a computing device (e.g., Trueba's controller 100) configured to control at least one function (e.g., delivery of fluids) of the system. See element [4].

16. Claim 31

[31] The system of claim 30, further comprising a user input device to select a flow of fluids from the first container and the at least one additional container to the handpiece.

291. It is my opinion that Karasiuk-Palmer-Trueba renders obvious a user input device (e.g., Trueba's touch screen 105) to select a flow of fluids from the first container and the at least one additional container to the handpiece. See element [5].

17. Claim 32

[32] The system of claim 31, wherein the user input device comprises a touch

screen.

292. It is my opinion that Karasiuk-Palmer-Trueba renders obvious that the user input device (e.g., Trueba's touch screen 105) comprises a touch screen. See element [6].

18. Claim 33

[33] The system of claim 32, further comprising a display.

293. It is my opinion that Karasiuk-Palmer-Trueba renders obvious a display (e.g., Trueba's touch screen 105). See element [7].

19. Claim 41

[41] The system of claim 37, further comprising a computing device configured to control at least one function of the system.

294. It is my opinion that Karasiuk-Palmer-Trueba renders obvious a computing device (e.g., Trueba's controller 100) configured to control at least one function (e.g., delivery of fluids) of the system. See element [4].

20. Claim 42

[42] The system of claim 41, further comprising a user input device to select a flow of fluids from the first container and the at least one additional container to the handpiece.

295. It is my opinion that Karasiuk-Palmer-Trueba renders obvious a user input device (e.g., Trueba's touch screen 105) to select a flow of fluids from the first container and the at least one additional container to the handpiece. See element [5].

21. Claim 43

[43] The system of claim 42, wherein the user input device comprises a touch screen.

296. It is my opinion that Karasiuk-Palmer-Trueba renders obvious that the user input device (e.g., Trueba's touch screen 105) comprises a touch screen. See element [6].

22. Claim 44

[44] The system of claim 43, further comprising a display.

297. It is my opinion that Karasiuk-Palmer-Trueba renders obvious a display (e.g., Trueba's touch screen 105). See element [7].

XIII. [GROUND 2A] – Greenberg

1. Claim 1

[1.pre] A system for treating skin, the system comprising:

298. To the extent the preamble is limiting, Greenberg renders it obvious. Greenberg, tilted "Apparatus for variable micro abrasion of human tissue and/or hides using different size and types of abrasive particles," discloses: "A microabrasion apparatus for providing treatment of skin or other surfaces." EUNSUNG-1006, Title, Abstract, FIG. 1, FIG. 3.

[1.1] a console configured to receive a first container and at least one additional container;

299. It is my opinion that Greenberg renders obvious a console (e.g., Greenberg's apparatus 10) configured to receive a first container (e.g., Greenberg's container 90) and at least one additional container (e.g., Greenberg's container 94).

As shown in FIG. 1, Greenberg discloses "an **apparatus 10** for making abrasions including a vacuum pump 12 operatively connected in series to either a first assembly including a **recovery container 14**, **a handle 16** and a **supply container 18** by tubes 20, or operatively connected to a second assembly including a recovery container 22, a handle 24 and a supply container 26 by tubes 28." EUNSUNG-1006, [0049], FIG. 1. As shown in FIG. 1, Greenberg's apparatus 10 is designed to receive and connect the containers and the handle, and enclose various components within the apparatus, allowing the user to control fluid flow via switches (e.g., switch 30). EUNSUNG-1006, [0049]-[0064]; Thus, a POSITA would have recognized that Greenberg's apparatus corresponds to a ***console*** that receives multiple containers. This aligns with the disclosure of console 12 in the '287 patent, which receives/connects multiple containers (EUNSUNG-1001, 14:38-48), a valve system (EUNSUNG-1001, 9:18-20, 18:38-42), a handpiece (EUNSUNG-1001, 18:46-55), a vacuum pump (EUNSUNG-1001, 11:5-6, 18:38-45), a filter 28 (EUNSUNG-1001, 6: 6-8), and a waste container (EUNSUNG-1001, 7:47-48, FIG. 1).

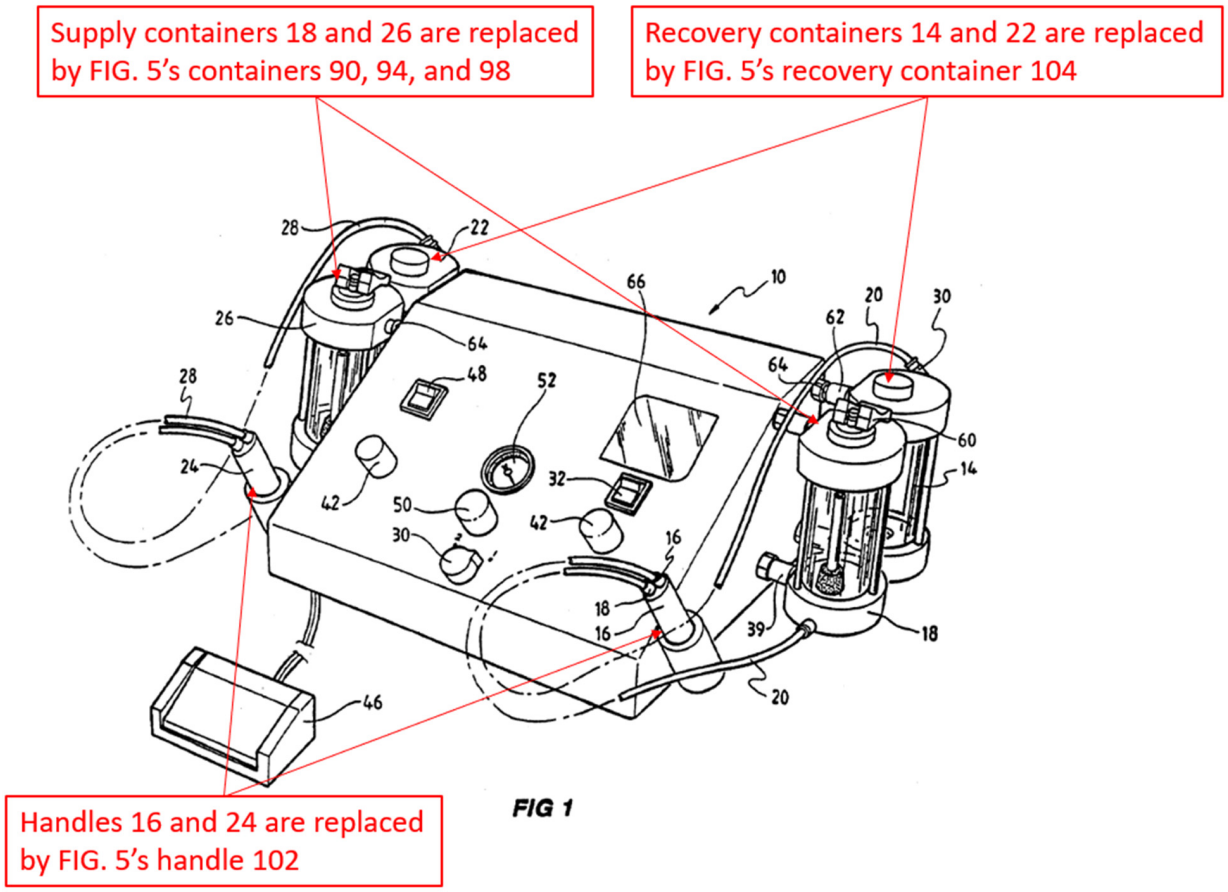

Greenberg, FIG. 1 (annotated)

300. To the extent Patent Owner argues that Greenberg's apparatus does not include a console, a POSITA would have been motivated and found it obvious to place Greenberg's apparatus in a console for increased portability and/or organization. EUNSUNG-1005, 9:58-10:2, FIGS. 11A-11C. Using a console to house similar medical devices were well-known and would have been within a POSITA's general knowledge. EUNSUNG-1010, FIGS. 2A-2G, 7A-7D, [0063] ("Console 12 houses the electrical controls for system 10, together with the motors which drive piston 20 and peristaltic pump 44."), [0088], [0154] ("The console and

power supply are mounted to a cart, generally indicated at 402 which includes wheels for easy movement and which is preferably designed to provide stability and deter tipping when used in its intended method"); EUNSUNG-1005, 9:58-10:2, FIGS. 11A-11C; EUNSUNG-1011, FIG. 2, 4:57-60, 5:55-61. Indeed, a POSITA would have viewed a console as one of a finite number of options to achieve increased portability and/or organization that would have been obvious to try. *Id*. A POSITA would have had a reasonable expectation of success to place Greenberg's apparatus in a console, as it would constitute the use of a known technique to improve similar devices in the same way. *Id*.

301. For example, Duchon discloses a medical fluid delivery system where the user can choose the desired fluid (e.g., contrast material or saline) from multiple fluid containers (e.g., reservoir 22 or bag 50). EUNSUNG-1010, Abstract, FIG. 1, [0006]. Duchon discloses in relevant part:

> [0063] **Console 12** houses the electrical controls for system 10, together with the motors which drive piston 20 and peristaltic pump 44. On the front surface of **console 12**, user interface 55 provides control switches 56 and display 58 through which the user may enter control settings and monitor the operational state of system 10. The console can be free-standing, preferably configured for mounting on a transport cart assembly.

EUNSUNG-1010, [0063].

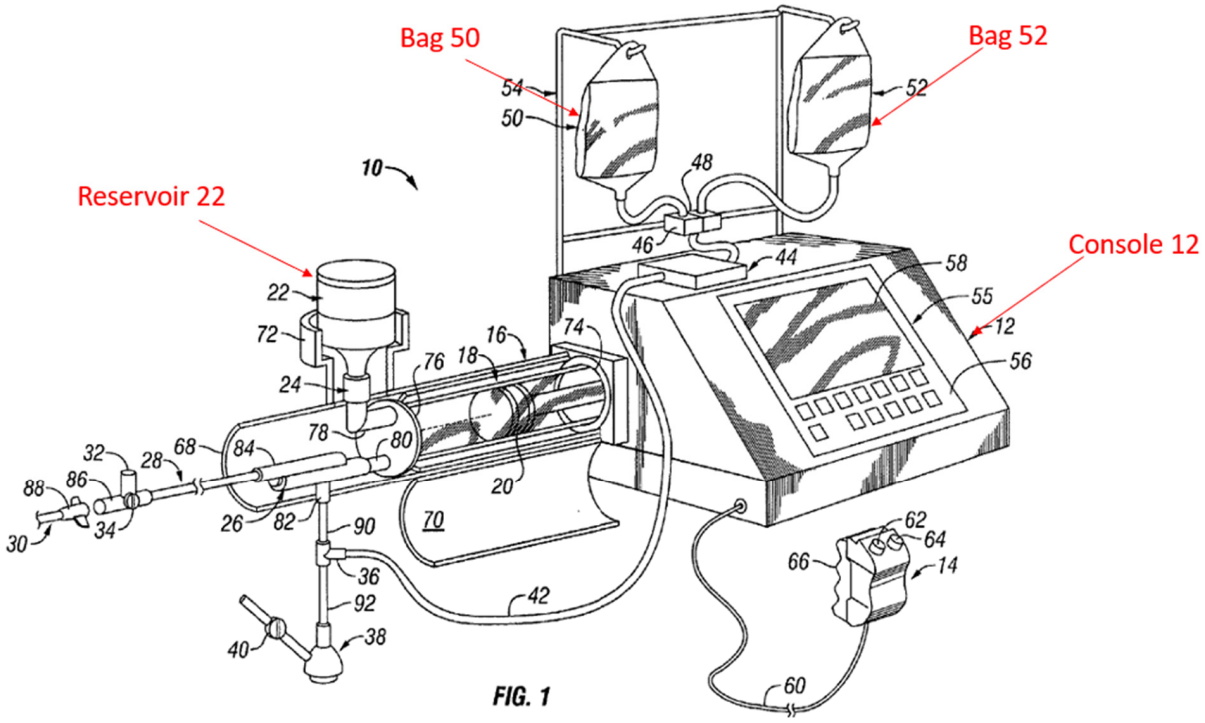

Duchon, FIG. 1 (annotated)

302. As another example, Armstrong discloses a medical fluid delivery system where the user can choose a desired fluid from several fluid containers (e.g., reservoirs 46). EUNSUNG-1011, Abstract, FIG. 1, FIG. 2.

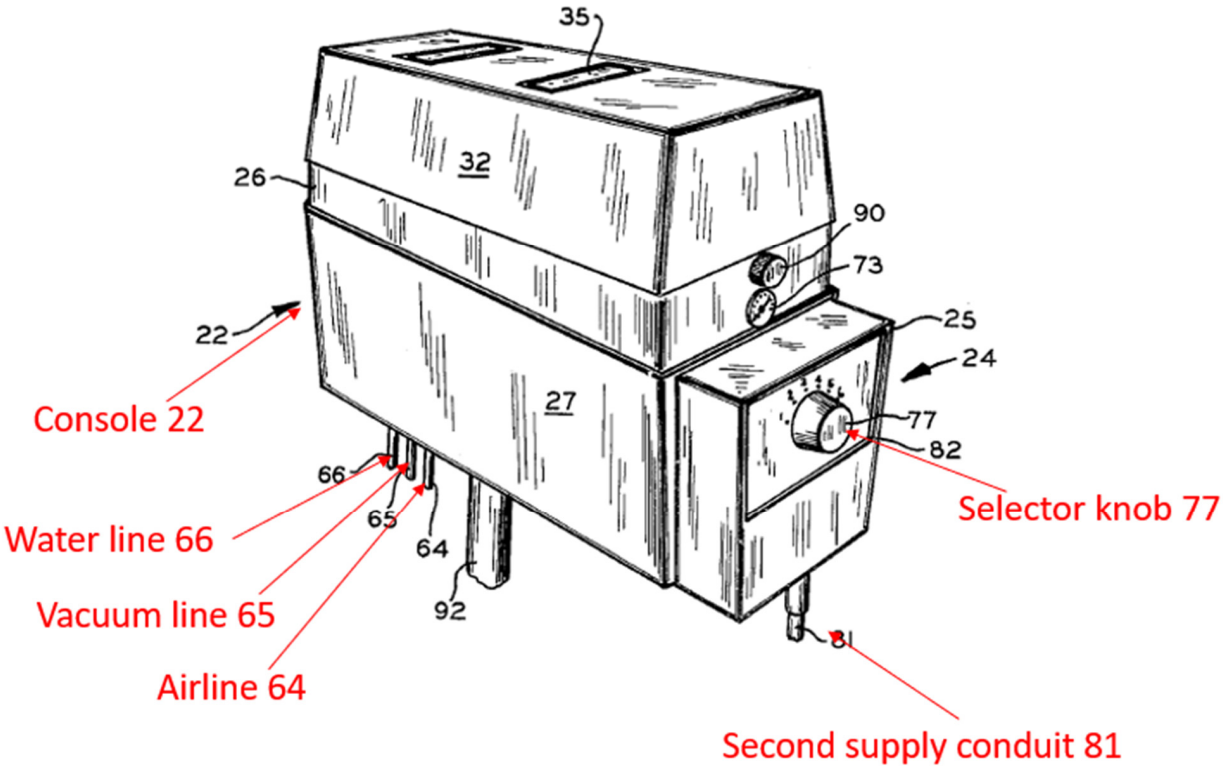

Armstrong, FIG. 2 (annotated)

303. Armstrong discloses in relevant part:

> FIG. 2 shows the system 21 of FIG. 1 with the control box 82 secured to the supply station 22. In this embodiment the supply station 22 is supported by a pedestal 92 so that, if desired, the entire system 21 may be placed next to the patient treatment area. This embodiment is typically used in a dental care center as opposed to a surgical theater usage.

EUNSUNG-1011, 5:55-61.

304. As another example, Wunsch discloses an apparatus (e.g., console 10) for sequentially dispensing a plurality of solutions through a manifold that is connected to each of the solutions to be administered. EUNSUNG-1020, Abstract, 7:39-56, 8:17-26, FIGS. 1-4. As shown in FIG. 1, the manifold selector 17 includes

a plurality of valves 40, which control the flow of solution from the plurality of bottles 15. EUNSUNG-1020, 6:18-48, 7:16-56. In operation, the user can program the sequencer timer 13 to automatically operate the valves 40 to achieve automatic switching between different solutions and sequential delivery of different solutions. EUNSUNG-1020, 9:36-10:64.

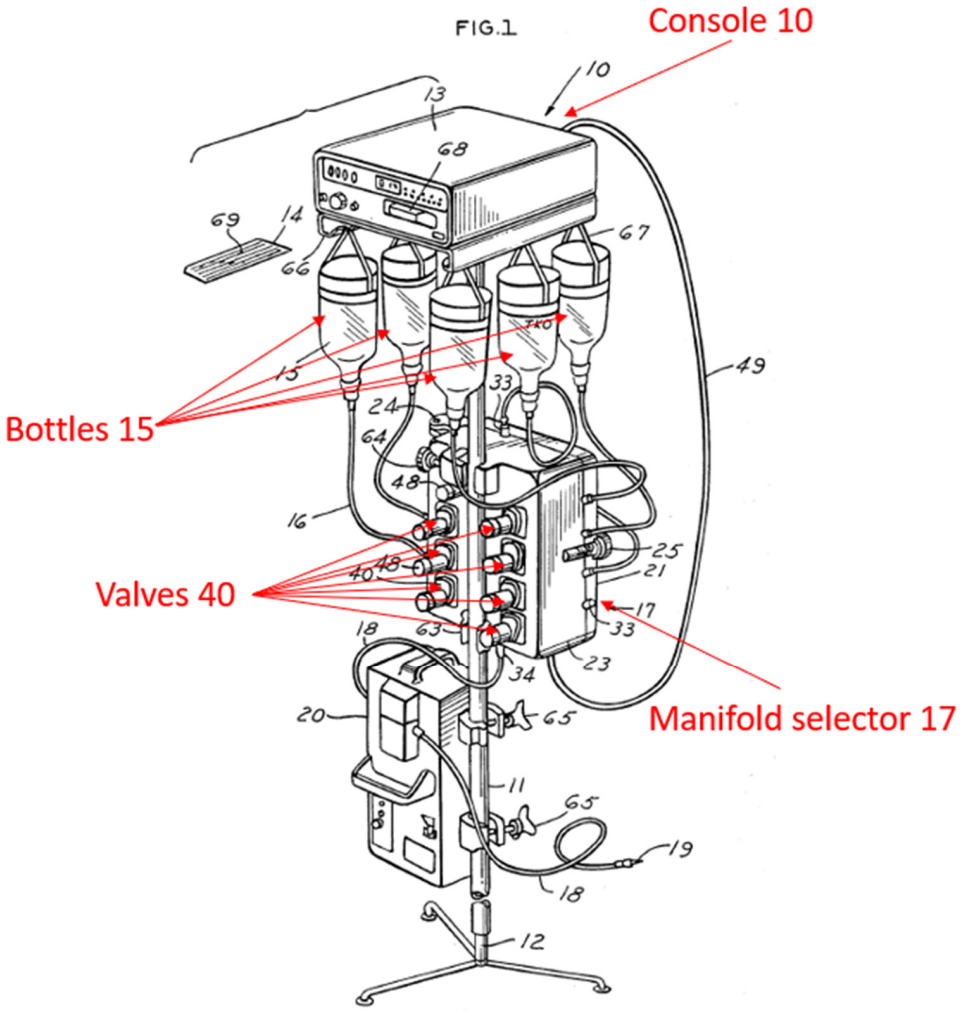

EUNSUNG-1020, FIG. 1 (annotated)

305. As discussed in Section X.4 above, Greenberg describes providing at least three different supply containers in the apparatus 10. A POSITA would have

understood two of these three containers correspond to the ***first container*** and the ***at least one additional container*** received at the console. EUNSUNG-1006, [0077], modified FIG. 1 (as modified by FIG. 5). Specifically, Greenberg discloses:

> [0077] This can be achieved in the present apparatus by having an apparatus with a plurality of supply containers housing different particles. As shown in FIG. 5 for example, there may be three different supply containers. Container 90 may house standard aluminium oxide particles 92, supply container 94 may house organically coated aluminium oxide particles 96 whist supply container 98 may house organic particles 100. A supply container can be chosen to be in communication with handle 102 and recovery container 104 by the use of valve 106 that controls air flow into the respective supply container and valve 108 that than connects that supply container to the handle 102 and recovery container 104.

EUNSUNG-1006, [0077].

306. Thus, Greenberg renders obvious a console (e.g., apparatus 10) configured to receive a first container (e.g., container 90) and at least one additional container (e.g., container 94), as taught by Greenberg. EUNSUNG-1006, FIGS. 1 and 5.

[1.2] a handpiece configured to contact skin tissue of a subject; and

307. It is my opinion that Greenberg renders obvious a handpiece (e.g., Greenberg's handle 102) configured to contact skin tissue of a subject. Greenberg describes "handle 16" (FIG. 1) and "handle 102" (FIG. 5) that are configured to contact skin tissue of a subject. Greenberg discloses: "the vacuum pump 12 is

either connected so as to provide a pneumatic source to recovery container 14, **handle 16** and supply container 18 or alternatively to supply recovery container 22, **handle 24** and supply container 26." EUNSUNG-1006, [0066]. As shown in FIG. 3, handle 16 is configured to contact skin tissue of a subject. EUNSUNG-1006, FIG. 3. Further, Greenberg describes a single handle 102 being used for multiple containers. EUNSUNG-1006, [0077];

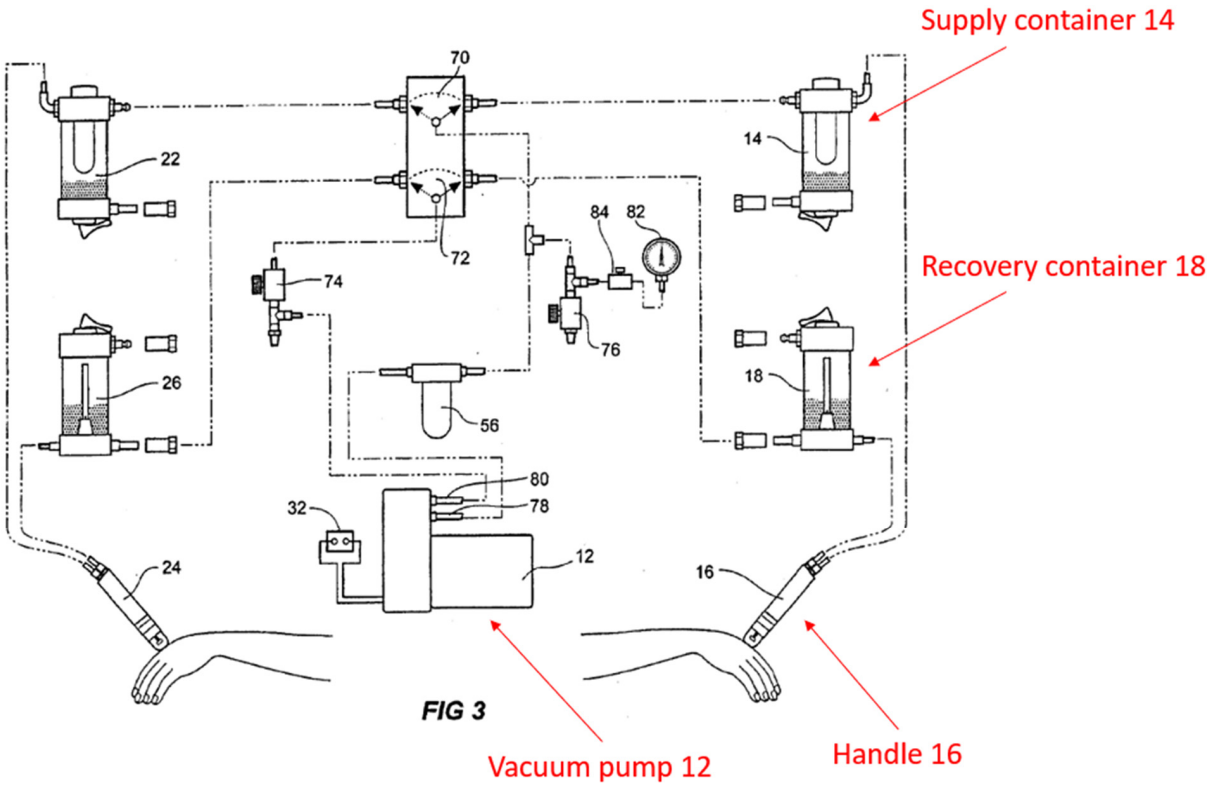

Greenberg, FIG. 3 (annotated)

308. Thus, Greenberg discloses a handpiece (e.g., handle 16) configured to contact skin tissue of a subject.

[1.3] a block in the console, wherein the block is: configured to selectively receive fluid from the first container when the first container is connected to the

console; configured to selectively receive fluid from the at least one additional container when the at least one additional container is connected to the console; and, configured to selectively be in fluid communication with the handpiece through a first conduit when the handpiece is connected to the console;

309. It is my opinion that Greenberg renders obvious a block (e.g., Greenberg's valve 108 or a subpart of apparatus 10 that houses valve 108) in the console (e.g., Greenberg's apparatus 10), wherein the block is: configured to selectively receive fluid from the first container (e.g., Greenberg's container 90) when the first container is connected to the console; configured to selectively receive fluid from the at least one additional container (e.g., Greenberg's container 94, 98) when the at least one additional container is connected to the console; and, configured to selectively be in fluid communication with the handpiece (e.g., Greenberg's handle 102) through a first conduit (e.g., tube 20) when the handpiece is connected to the console. See element [1.1].

310. As discussed above regarding element [1.1], Greenberg discloses a ***console*** (e.g., apparatus 10) configured to receive the first container (e.g., supply container 90) and at least one additional container (e.g., supply container 94). As shown in FIG. 1, Greenberg's supply containers 90, 94, 98 (***first*** and ***at least one additional containers***; *see* element [1.1]) are connected to apparatus 10 (***console***). EUNSUNG-1006, [0053], [0062]. Greenberg's containers are fluidly connected to various components (e.g., vacuum pump 12, switch 30, valve 54) enclosed in apparatus 10, as shown in FIGS. 2-4. EUNSUNG-1006, [0049]-[0057]. As shown

in FIG. 1, Greenberg's containers 90, 94, 98 (***first*** and ***at least one additional containers***) are connected to the apparatus 10 (***console***). EUNSUNG-1006, [0053], [0062] (describing the container's "projections 62 adapted to engage holding bores 64 on the apparatus"), FIG. 1; In addition, Greenberg describes that the containers are fluidly connected to various components (e.g., vacuum pump 12, switch 30, valve 54) enclosed in the apparatus 10, as shown in FIGS. 2-4. EUNSUNG-1006, [0049]-[0057].

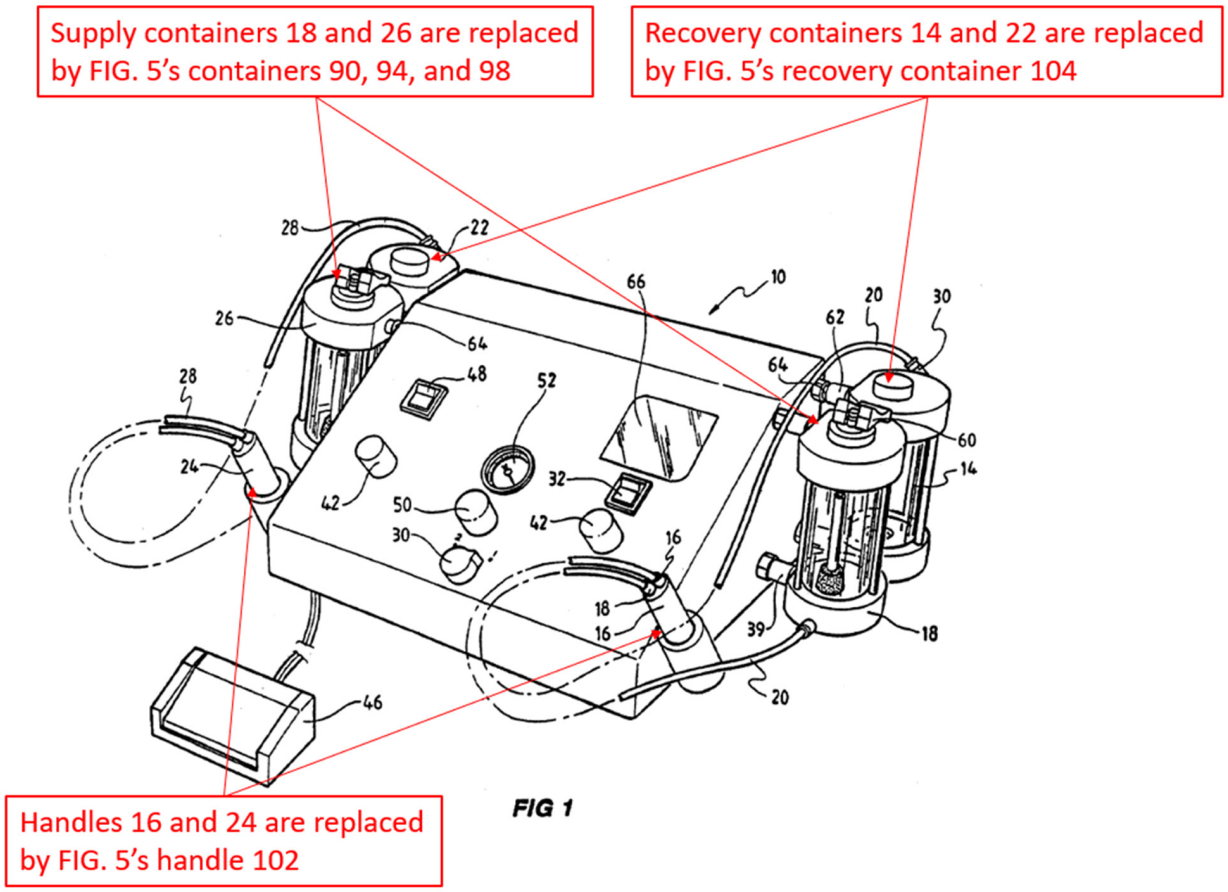

Greenberg, FIG. 1 (annotated)

311. Further, as shown in FIG. 1, Greenberg describes that the handles 16,

24 (or handle 102 in FIG. 5) (***handpiece***) are connected to the apparatus 10 (***console***). EUNSUNG-1004, [0004], [0049], FIG. 1; In addition, Greenberg's handles 16, 24 (or handle 102 in FIG. 5) are fluidly connected to various components (e.g., vacuum pump 12, switch 30, valve 54) enclosed in the apparatus 10, as shown in FIGS. 2-4. EUNSUNG-1006, [0049]-[0059].

312. Greenberg discloses or renders obvious the ***block*** in [1.3]. As discussed in Section X.4, FIG. 5's implementation would have been readily incorporated into FIG. 1's apparatus. For example, as shown in FIG. 5, Greenberg describes a system of "valve 108" configured to selectively connect one of the supply containers 90, 94, 98 to the handle 102 depending on which container is selected among the supply containers via valve 106. EUNSUNG-1004, [0077]. Therefore, Greenberg's valve 108 selectively receives fluid from the respective supply containers 90, 94, 98 when these containers are respectively selected to receive air flow thereinto (e.g., blue, red, and green paths in annotated FIG. 5 below).

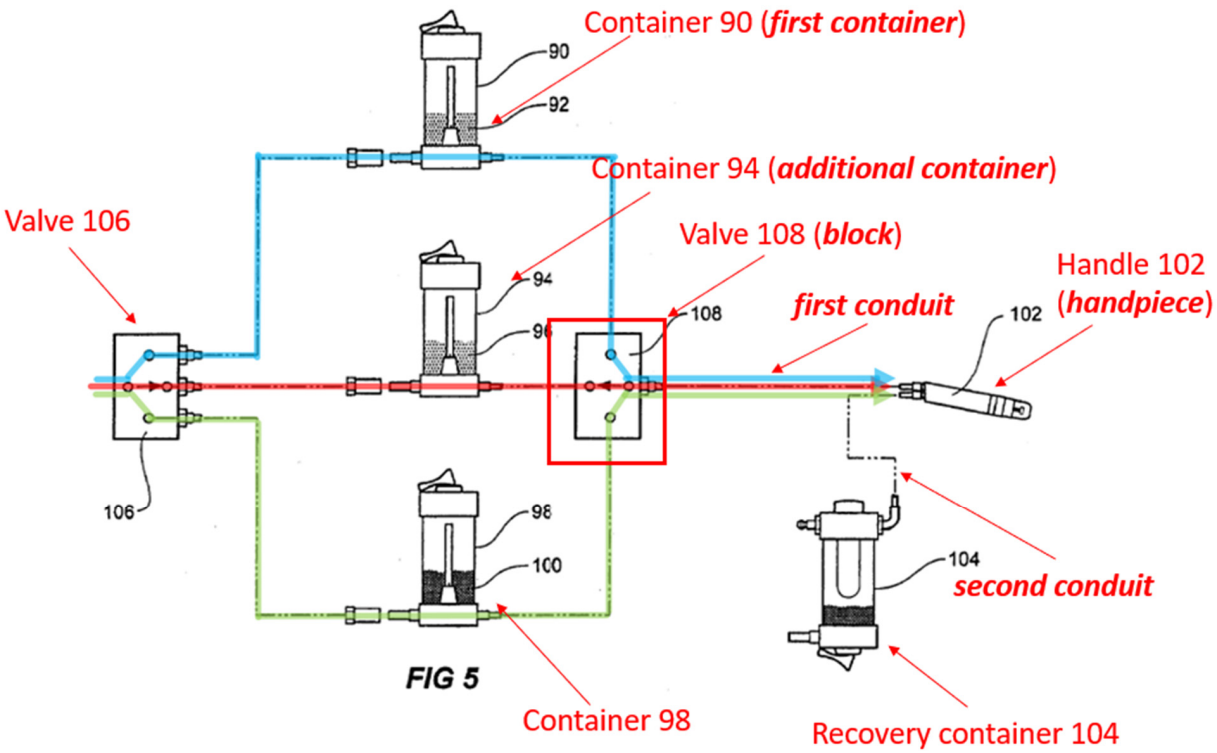

Greenberg, FIG. 5 (annotated)

313. Greenberg's valve system (including valve 108) (***block***) is also selectively in fluid communication with the handle 102. EUNSUNG-1006, [0077] ("[a] supply container can be **chosen** to be in communication with handle 102 and recovery container 104 by …valve 108"), FIG. 5. Although FIG. 5 does not label the path (dotted line) between the valve 108 and the handle 102, it would have been obvious that it is defined by a tube, such as the tube 20 illustrated in FIG. 1, and this tube forms a "first conduit" within the meaning of element [1.3]. EUNSUNG-1004, [0049], FIG. 1. Specifically, Greenberg discloses:

> [0049] Turning now to the figures in detail, and specifically FIGS. 1 and 2, there is shown an apparatus 10 for making abrasions including **a vacuum pump 12 operatively connected**

> **in series to either a first assembly including a recovery container 14, a handle 16 and a supply container 18 by tubes 20,** or operatively connected to a second assembly including a recovery container 22, a handle 24 and a supply container 26 by tubes 28.

EUNSUNG-1006, [0049].

314. Greenberg also discloses in relevant part:

> [0077] This can be achieved in the present apparatus by having an apparatus with a plurality of supply containers housing different particles. As shown in FIG. 5 for example, there may be three different supply containers. Container 90 may house standard aluminium oxide particles 92, supply container 94 may house organically coated aluminium oxide particles 96 whist supply container 98 may house organic particles 100. **A supply container can be chosen to be in communication with handle 102 and recovery container 104 by the use of valve 106 that controls air flow into the respective supply container and valve 108 that than connects that supply container to the handle 102 and recovery container 104.**

EUNSUNG-1006, [0077].

315. A POSITA would have understood that one or more of (1) Greenberg's valve 108 and (2) a subpart of Greenberg's apparatus 10 that houses valve 108 constitute a "block." Interestingly, the '287 patent's specification is silent as to the term "block" while it allegedly describes a "manifold" as performing similar functionalities. EUNSUNG-1001, 5:28-30 ("manifold system 24 can control the flow of treatment material from containers 26 into and through the line 20."), Abstract ("the manifold is configured to hold releasably a plurality

of fluid sources and deliver fluid from at least one of the plurality of fluid sources to the handpiece assembly"). While the specification of the '287 patent does not mention the term "block," other patents in the same family (including the '052 patent and the '477 patent) claimed similar functionality using the term "manifold." EUNSUNG-1017, claim 1; EUNSUNG-1018, claim 1; EUNSUNG-1001, 5:28-30 ("manifold system 24 can control the flow of treatment material from containers 26 into and through the line 20."), Abstract ("the manifold is configured to hold releasably a plurality of fluid sources and deliver fluid from at least one of the plurality of fluid sources to the handpiece assembly"); In the '287 patent, Patent Owner used the term "block" in an apparent attempt to broaden the scope of protection. EUNSUNG-1001, claim 1. As discussed below, the Karasiuk-Palmer combination renders obvious the claimed functionality using a block or manifold.

316. Similar to the '287 patent's manifold (or at least the portion of the manifold that performs the functions claimed in [1.3]), Greenberg's valve 108 or a subpart of the apparatus housing the valve is (1) configured to selectively receive fluid from the first container (e.g., container 90) when the first container is connected to the console (e.g., apparatus 10), (2) configured to selectively receive fluid from the at least one additional container (e.g., container 94) when the at least one additional container is connected to the console, and (3) configured to

selectively be in fluid communication with the handpiece (e.g., handle 102) through a first conduit (e.g., tube 20) when the handpiece is connected to the console.

317. Alternatively, to the extent Patent Owner argues that the claimed "block" requires the use of a manifold and that Greenberg's structure does not comprise a manifold, a POSITA would have found it obvious to use a manifold to implement the functionality of switching treatment fluids described by Greenberg. Manifolds and their variants are foundational constructs within the art of fluidics and were well-known devices for selecting between or differentially combining different fluids and would have been within a POSITA's general knowledge. Manifolded rotational and linear valve/switch components were common before the Critical Date. EUNSUNG-1010, FIGS. 2A-2G, 7A-7D, [0086] ("Manifold 26 contains a valve which controls the routing of fluid connections between patient port 84 and either syringe bottom port 80 or transducer/saline port 82."), [0088]; EUNSUNG-1019, Abstract, 6:43-45 ("The ports, valves and conduits of the manifold may be configured in any manner that permits the desired flow of fluid through the manifold"), 10:30-44, FIGS. 7-10; EUNSUNG-1020, Abstract ("Apparatus for sequentially dispensing a plurality of solutions through an intravenous supply catheter includes a disposable tubing manifold…"), 7:39-56, 8:17-26, FIGS. 1-4; EUNSUNG-1021, Abstract, 4:57-65, FIG. 1; EUNSUNG-

1022, Abstract, FIGS. 1-4. Based on this general knowledge, a POSITA would have found it obvious to implement Greenberg functionality using a manifold because manifolds were known to provide the combining function required, wherein multiple supply lines are combined (and may be valved) and connected to a single fluid output, as described by Greenberg. *Id*. Indeed, a POSITA would have viewed a manifold as one of a finite number of options to achieve the functionality described by Greenberg that would have been obvious to try. *Id*. The ’287 patent did not invent a manifold (nor did it invent the analogous block or more commonly known as a fluidic block) and, based on a POSITA’s general knowledge, a POSITA would have found it obvious to implement Palmer’s functionality using a manifold, as it would have merely involved a simple substitution of one well-known element for another to obtain predictable results. A POSITA would have had a reasonable expectation of success to implement Greenberg’s switching between different fluids and providing a single fluid output using a manifold, as it would have merely involved a simple substitution of one well-known element for another to obtain predictable results. *Id*.

318. For example, Wunsch discloses an apparatus (e.g., console 10) for sequentially dispensing a plurality of solutions through a manifold (e.g., manifold selector 17) that is connected to each of the solutions to be administered. EUNSUNG-1020, Abstract, 7:39-56, 8:17-26, FIGS. 1-4. As shown in FIG. 1, the

manifold selector 17 includes a plurality of valves 40, which control the flow of solution from the plurality of bottles 15. EUNSUNG-1020, 6:18-48, 7:16-56. In operation, the user can program the sequencer timer 13 to automatically operate the valves 40 to achieve automatic switching between different solutions and sequential delivery of different solutions. EUNSUNG-1020, 9:36-10:64.

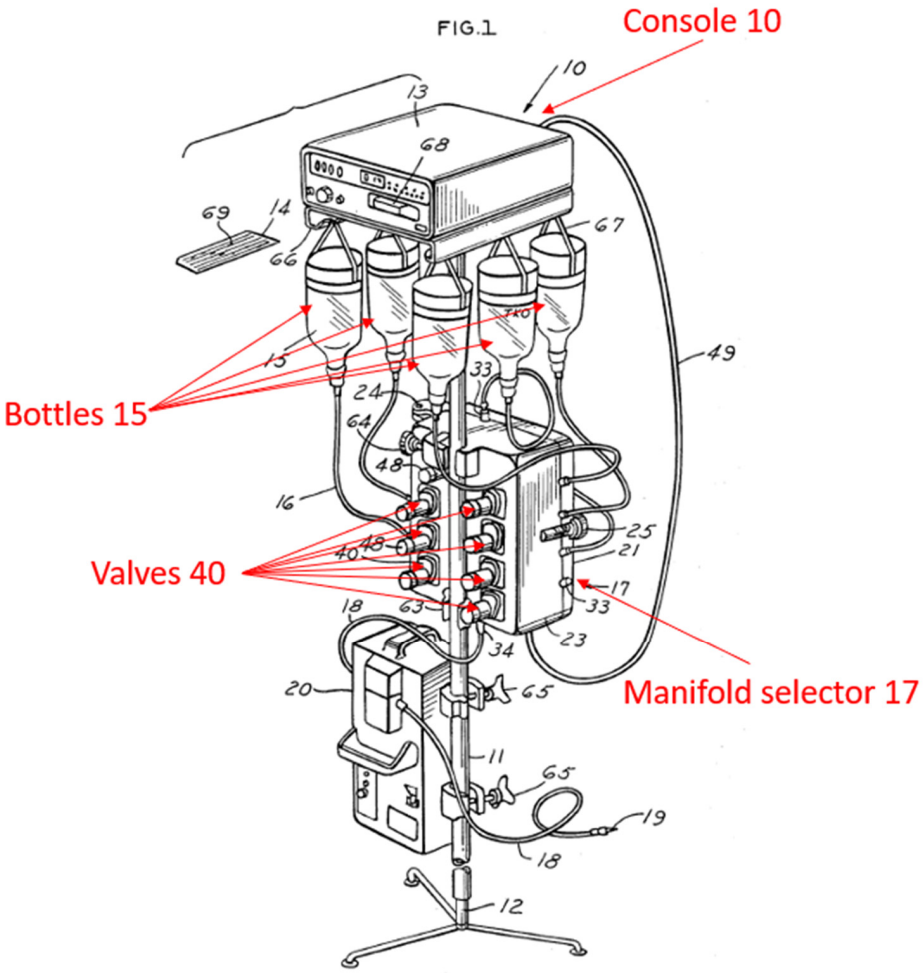

Wunsch, FIG. 1 (annotated)

319. To the extent that Patent Owner alleges that the term "block" requires

a certain structure such as a rectangular shaped enclosure or a fluidic block, it is my opinion that a POSITA would have understood the claim language do not require such a structure. As discussed above, the specification of the ’287 patent never used the term “block” and instead only describes a “manifold” (e.g., manifold system 24) that controls the flow of treatment material from the containers to the handpiece. EUNSUNG-1001, 5:28-31 (“A manifold system 24 can control the flow of treatment material from containers 26 into and through the line 20”), 6:21-37, 17:17-18:18. The ’287 patent does not specify that this “manifold” has any particular structure and does not ascribe any benefits to a particular structure (e.g., a rectangular shaped enclosure). Even if the term “block” is interpreted to require a particular structure (e.g., a rectangular shaped enclosure), it is my opinion that such a structure is an obvious design choice in view of the knowledge of POSITA. A POSITA would have known that many similar prior art fluid delivery systems have a manifold with a similar structure (e.g., a rectangular shaped enclosure). EUNSUNG-1020, FIG. 1 (showing a rectangular manifold selector 17); EUNSUNG-1011, FIG. 1 and FIG. 2 (showing a rectangular control station 25); EUNSUNG-1005, FIG. 11B and FIG. 4 (showing a rectangular control unit enclosure 35); EUNSUNG-1006, FIG. 5 (showing a rectangular valve 108). Thus, it is my opinion that Karasiuk-Palmer renders this limitation obvious.

320. Based on FIG. 1 and FIG. 5, a POSITA would have understood that

Greenberg's valve 108 (at least part of ***block***) is located inside the apparatus 10 (***console***). Alternatively, a POSITA would have found it obvious to place "valve 108" (***block***) inside apparatus 10 (***console***) for increased portability and/or organization. EUNSUNG-1006, FIGS. 1 and 5.

321. To the extent that Greenberg does not expressly describe "fluid" for its treatment solutions, a POSITA would have understood or found obvious that Greenberg's "particles" comprises "fluid" as described in the '287 patent. In particular, the '287 patent describes that "[t]he general term 'fluid' is used throughout synonymously with the term 'treatment material' and is to be given the same broad definition," and defines the term "treatment material" as "a broad term and includ[ing], ... medicament, a substance tending to flow or conform to the outline of its container such as fluid, gas, liquid, gel, fluidized material, additives, and/or **a plurality of fine solids**." EUNSUNG-1001, 5:47-52. Thus, a POSITA would have readily recognized Greenberg's particles to be examples of the "fine solids" of the '287 patent.

322. Notably, Greenberg's system "us[es] an air flow to carry particles through a hand tool." EUNSUNG-1006, [0040]; *see also* [0017] ("in operation said pneumatic source provides for an air flow through the recovery container, hand tool and the selected supply container in communication with same, drawing said[] particles from the supply container through the hand tool and into the recovery

container"). A POSITA would have understood that the air flow carrying particles is considered to be "fluid" as used in the '287 patent.

323. Thus, Greenberg discloses or renders obvious a block (e.g., valve 108 and/or a subpart of Greenberg's apparatus that houses valve 108) in the console (e.g., apparatus 10), wherein the block is: configured to selectively receive fluid from the first container (e.g., container 90) when the first container is connected to the console; configured to selectively receive fluid from the at least one additional container (e.g., container 94) when the at least one additional container is connected to the console; and configured to selectively be in fluid communication with the handpiece (e.g., handpiece 102) through a first conduit (e.g., tube 20) when the handpiece is connected to the console.

[1.4] a vacuum source, wherein the console comprises the vacuum source; and

324. It is my opinion that Greenberg renders obvious a vacuum source (e.g., Greenberg's vacuum pump 12), wherein the console (e.g., Greenberg's apparatus 10) comprises the vacuum source. See element [1.1].

325. Greenberg discloses that "the pneumatic source is a vacuum pump" (EUNSUNG-1006, [0026], [0004], [0049]-[0059], [0066]) and "said pneumatic source provides for an air flow through the recovery container, hand tool and the selected supply container in communication with same, drawing said particles from the supply container through the hand tool and into the recovery container."

EUNSUNG-1006, [0017], FIG. 3, [0052]. Thus, it would have been obvious that in FIG. 5, a vacuum source (e.g., vacuum pump 12) is connected to recovery container 104.

326. Based on FIG. 1 and FIG. 2, a POSITA would have understood that Greenberg's vacuum pump 12 is located inside the console (e.g., apparatus 10). element [1.1]. Alternatively, it would have been obvious to place vacuum pump 12 inside the console for increased portability and/or organization.

327. Thus, Greenberg discloses or renders obvious a vacuum source (e.g., vacuum pump 12), wherein the console comprises the vacuum source.

[1.5] wherein the handpiece is configured to be in fluid communication with the vacuum source through a second conduit when the handpiece is connected to the console;

328. It is my opinion that Greenberg renders obvious that the handpiece (e.g., Greenberg's handle 102) is configured to be in fluid communication with the vacuum source (e.g., Greenberg's vacuum pump 12) through a second conduit when the handpiece is connected to the console. See element [1.1]. In particular, as noted above in [1.3], Greenberg's ***handpiece*** is connected to the ***console*** ([1.1]). Further, as discussed in [1.4] above, Greenberg's vacuum pump 12 "provides for an air flow through the recovery container, hand tool and the selected supply container in communication with same, drawing said particles from the supply container through the hand tool and into the recovery container." EUNSUNG-

1006, [0017], [0052]. Thus, as shown in FIG. 5 below, a POSITA would have understood and found obvious that Greenberg's vacuum pump 12 is fluidly connected to the recovery container 104. Therefore, Greenberg's handle 102 (***handpiece***) is ***in fluid communication with*** vacuum pump 12 (***vacuum source***; [1.4]) via the recovery container 104. EUNSUNG-1006, [0017], [0052], FIG. 5. Greenberg discloses that "the pneumatic source is a vacuum pump" (EUNSUNG-1006, [0026], [0004], [0049]-[0059], [0066]) and "said pneumatic source provides for an air flow through the recovery container, hand tool and the selected supply container in communication with same, drawing said particles from the supply container through the hand tool and into the recovery container." EUNSUNG-1006, [0017], FIG. 3, [0052]. Thus, it would have been obvious that in FIG. 5, a vacuum source (e.g., vacuum pump 12) is connected to recovery container 104.

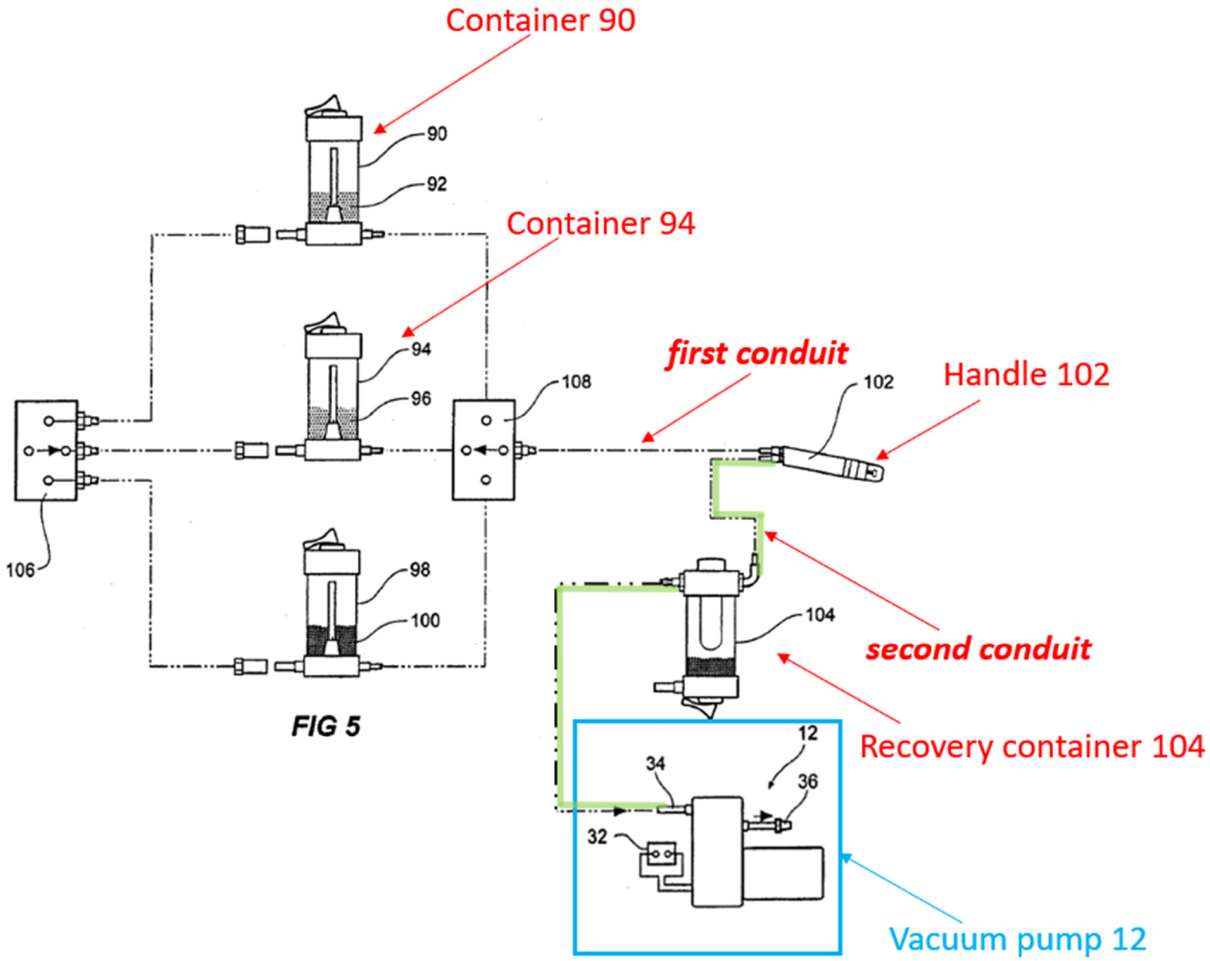

Modified FIG. 5 of Greenberg (annotated)

329. As shown in modified FIG. 5, "[a] supply container can be **chosen** to be in communication with handle 102 and recovery container 104 by …valve 108." EUNSUNG-1006, [0077], FIG. 5. While modified FIG. 5 does not label the path (dotted line) between valve 108 and handle 102, it would have been obvious that it is defined by a tube, such as FIG. 1's tube 20, and this tube forms a "first conduit" within the meaning of element [1.5]. Similarly, while modified FIG. 5 does not label the path (dotted line) between handle 102 and recovery container 104 and

similarly between recovery container 104 and the vacuum pump, it would have been obvious that the path (annotated in green) is defined by a tube, such as FIG. 1's tube 20, and this tube forms a "second conduit" within the meaning of element [1.5].

330. Thus, Greenberg discloses or renders it obvious that the handpiece (e.g., handle 102) is configured to be in fluid communication with the vacuum source (e.g., vacuum pump 12) through a second conduit (and through recovery container 104) when the handpiece is connected to the console.

[1.6] wherein when the handpiece, the first container, the at least one additional container and a waste container are each connected to the console, the first container contains a first treatment fluid, and the at least one additional container contains an additional treatment fluid,

331. It is my opinion that Greenberg renders obvious that when the handpiece (e.g., Greenberg's handle 102), the first container (e.g., container 90), the at least one additional container (e.g., container 94) and a waste container (e.g., recovery container 104) are each connected to the console (e.g., apparatus 10), the first container contains a first treatment fluid, and the at least one additional container contains an additional treatment fluid. See element [1.1].

332. As discussed above regarding element [1.3], a POSITA would have understood or found obvious that Greenberg's particles constitute "fluid."

333. For more discussion, see element [1.3] as to the handpiece, the first container, and the at least one additional container are each connected to the

console. Further, as discussed in [1.5] above, Greenberg describes recovery container 104 (***waste container***) to "draw[] [] particles from the supply container through the hand tool and into the recovery container." EUNSUNG-1006, [0017], [0052]. As discussed in [1.1], a POSITA would have found it obvious that the recovery container is connected to the console via the handpiece. *See* element [1.1].

334. Greenberg discloses: "the user can select from different supply containers and thus different particles each of which performs different types of treatment such as abrasion." EUNSUNG-1006, Abstract, [0077], FIG. 5. As shown in FIG. 5, Greenberg's device can comprise three supply containers (e.g., containers 90, 94, and 98). EUNSUNG-1006, [0077], FIG. 5. Greenberg discloses: "Preferably at least one said supply container includes organic type particles" (EUNSUNG-1006, [0023]) and "[t]he organic particles may not only contain essential oils but they may also contain fragrances that on impact with the skin impart some of those properties." EUNSUNG-1006, [0082]. Greenberg also discloses that "other additions to the synthetic or organic materials may be used… such as tea tree oils and essences, colourings and so on." EUNSUNG-1006, [0087], [0011]-[0012]. Greenberg discloses an example where the system can choose from three different treatment materials, including (1) purely organic materials, (b) a mixture of abrasive particles such as aluminum oxide mixed with

organic materials, and (c) abrasive particles that are coated with organic materials. EUNSUNG-1006, [0072]-[0077].

335. As discussed above regarding element [1.5], a waste container is connected to the console to receive particles and removed debris. EUNSUNG-1006, [0017], FIG. 3, [0052]. As discussed in [1.3], Greenberg's particles would have been understood as ***fluid***.

336. Thus, Greenberg discloses or renders it obvious that when the handpiece, the first container (e.g., container 90), the at least one additional container (e.g., container 94) and a waste container (e.g., recovery container 104) are each connected to the console (e.g., apparatus 10), the first container contains a first treatment fluid (e.g., first organic particles), and the at least one additional container contains an additional treatment fluid (e.g., second organic particles).

[1.7] the handpiece is in fluid communication with the vacuum source and the waste container through the second conduit; and

337. It is my opinion that Greenberg renders obvious that the handpiece (e.g., handle 102) is in fluid communication with the vacuum source (e.g., vacuum pump 12) and the waste container (e.g., recovery container 104) through the second conduit. See element [1.5] above.

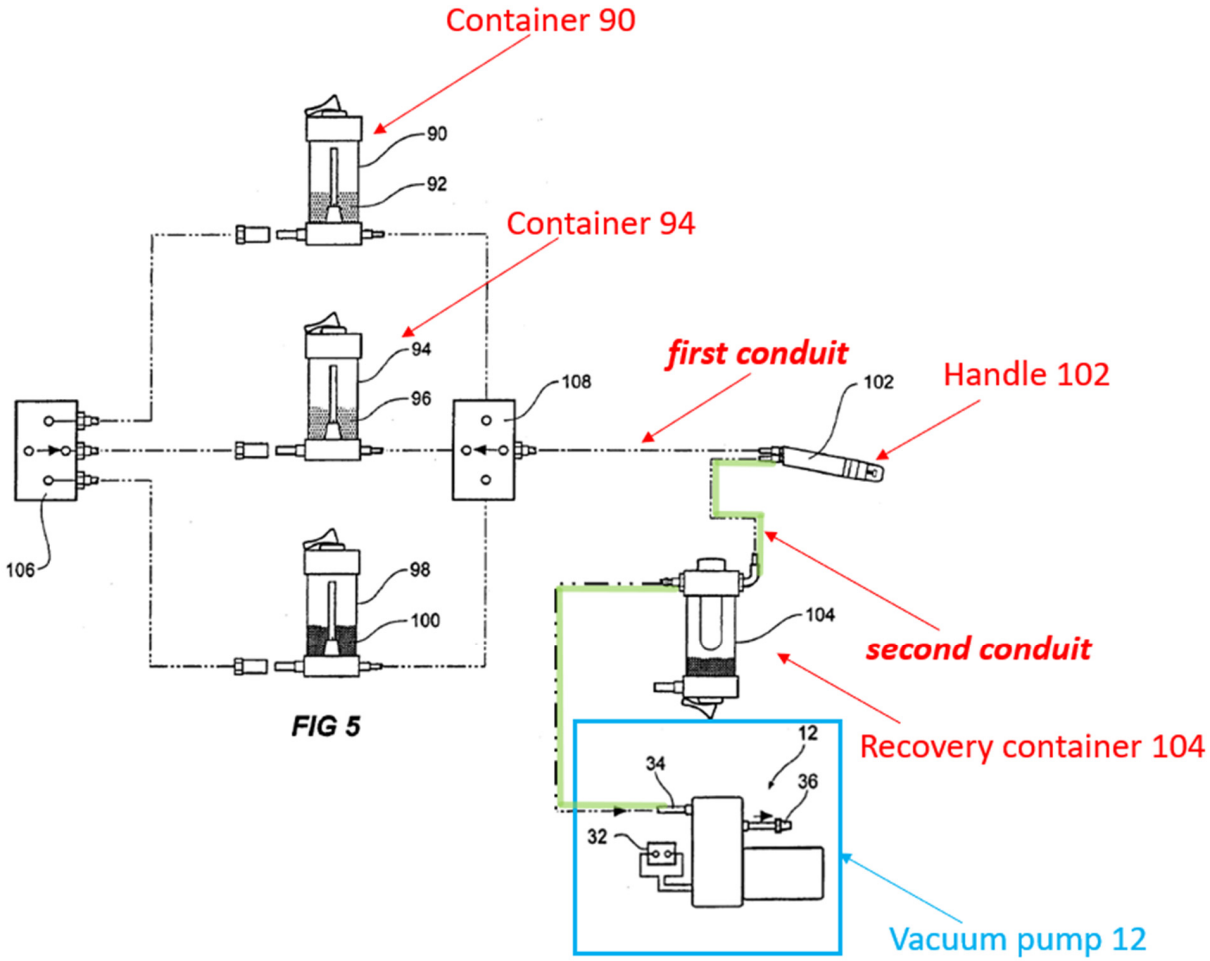

Modified FIG. 5 of Greenberg (annotated)

338. As shown in FIG. 5, Greenberg discloses that the handpiece (e.g., handle 102) is in fluid communication with the vacuum source (e.g., vacuum pump 12) and the waste container (e.g., recovery container 104) through the second conduit.

[1.8] the system is configured to deliver the first treatment fluid contained in the first container and the additional treatment fluid contained in the at least one additional container to the handpiece sequentially.

339. It is my opinion that Greenberg renders obvious that the system is

configured to deliver the first treatment fluid contained in the first container (e.g., container 90) and the additional treatment fluid contained in the at least one additional container (e.g., container 94) to the handpiece (e.g., handle 102) sequentially. See element [1.6].

340. Greenberg describes that "the apparatus contains separate abrasive and fragrant particles and that a user is firstly treated with the highly abrasive particles and **subsequently** with the organic ones that assist in leaving a residual layer on the skin." EUNSUNG-1006, [0084]. "For example, one may first wish to be treated with a harsh particle to remove quickly and efficiently top surface skin layers," and "**[s]ubsequently** one may wish to use the gentler but still slightly abrasive organic particles that compensate for any serious abrasion whilst imparting to the skin substances that help protect and nourish it." EUNSUNG-1006, [0089]. Greenberg discloses an example where the system can choose from three different treatment materials, including (a) purely organic materials, (b) a mixture of abrasive particles such as aluminum oxide mixed with organic materials, and (c) abrasive particles that are coated with organic materials. EUNSUNG-1006, [0072]-[0077].

341. It is my opinion that a POSITA would have understood that the term "sequentially" only requires that a first treatment fluid and a second treatment fluid be delivered one after another, as opposed to "simultaneously," and does not

require automatic switching between treatment fluids. However, to the extent that this term is interpreted to require automatic switching between treatment fluids, this feature is obvious in view of knowledge of the POSITA. For example, Trueba discloses "[c]omputerized control of medication dosing, **which may be programmed by medical personnel for subsequent automated delivery**, can help avoid toxic drug interactions, overdoses, and deaths." EUNSUNG-1008, 6:6-9. Furthermore, Trueba states: "… one or more of the bioactive agents from the reservoirs 54, 56 can be delivered from dispenser 30. **The multiple bioactive agents may be administered sequentially or simultaneously**." Trueba 11:21-24.

342. As another example, Wunsch discloses that the user can program the sequencer timer 13 to automatically operate the valves 40 to achieve automatic switching between different solutions and sequential delivery of different solutions. EUNSUNG-1020, 9:36-10:64.

343. Thus, Greenberg discloses or renders it obvious that the system is configured to deliver the first treatment fluid (e.g., "highly abrasive particles") contained in the first container (e.g., container 90) and the additional treatment fluid (e.g., "organic ones") contained in the at least one additional container (e.g., container 94) to the handpiece sequentially ("subsequently").

2. Claim 2

[2] The system of claim 1, wherein the at least one additional container comprises a second container and a third container such that the console is

configured to receive at least three containers.

344. It is my opinion that Greenberg renders obvious that the at least one additional container comprises a second container (e.g., container 94) and a third container (e.g., container 98) such that the console is configured to receive at least three containers (e.g., containers 90, 94, and 98). See element [1.1]. Again, as discussed in [1.1], Greenberg describes at least three supply containers in the apparatus, which would have been understood as a ***first container*** (e.g., container 90) and ***at least one additional container*** (e.g., containers 94, 98) received at the console. EUNSUNG-1006, [0077], FIG. 1. Further, as discussed in [1.6], Greenberg's three supply containers that contain "different particles each of which performs different types of treatment such as abrasion." EUNSUNG-1006, Abstract, [0072]-[0077]

345. Greenberg discloses an example where the system can choose from three different treatment materials, including (1) purely organic materials, (b) a mixture of abrasive particles such as aluminum oxide mixed with organic materials, and (c) abrasive particles that are coated with organic materials. EUNSUNG-1006, [0072]-[0077]. "FIG. 5 is a schematic representation" of "three supply containers having different particles with only one recovery container." EUNSUNG-1006, [0046], [0077], FIG. 5.

346. As shown in FIG. 5, Greenberg discloses that the at least one

additional container comprises a second container (e.g., container 94) and a third container (e.g., container 98) such that the console (e.g., apparatus 10) is configured to receive at least three containers (e.g., containers 90, 94, and 98).

3. Claim 3

[3] The system of claim 2, wherein when the handpiece is connected to the console and the first container, the second container and the third container each contains fluid and is connected to the console, the system is configured to deliver to the handpiece one at a time fluid contained in the first container, fluid contained in the second container, and fluid contained in the third container.

347. It is my opinion that Greenberg renders obvious that when the handpiece (e.g., handle 102) is connected to the console (e.g., apparatus 10) and the first container (e.g., container 90), the second container (e.g., container 94) and the third container (e.g., container 98) each contains fluid and is connected to the console, the system is configured to deliver to the handpiece one at a time fluid contained in the first container, fluid contained in the second container, and fluid contained in the third container. See elements [1.1] and [1.8]. Again, as discussed in [1.1], [1.3], and [1.8], the handpiece, the first container, and the second and third containers (i.e., the at least one additional container) are each connected to the console, and the first, second, and third containers each contain fluid. As shown in FIG. 5, Greenberg's device comprises three supply containers (e.g., containers 90, 94, and 98). EUNSUNG-1006, [0077], FIG. 5.

348. As noted with respect to [1.8], Greenberg discloses: "the apparatus

contains separate abrasive and fragrant particles and that a user is firstly treated with the highly abrasive particles and **subsequently** with the organic ones that assist in leaving a residual layer on the skin." EUNSUNG-1006, [0084]. "For example, one may first wish to be treated with a harsh particle to remove quickly and efficiently top surface skin layers. Subsequently one may wish to use the gentler but still slightly abrasive organic particles that compensate for any serious abrasion whilst imparting to the skin substances that help protect and nourish it." EUNSUNG-1006, [0089]. Greenberg discloses an example where the system can choose from three different treatment materials, including (a) purely organic materials, (b) a mixture of abrasive particles such as aluminum oxide mixed with organic materials, and (c) abrasive particles that are coated with organic materials. EUNSUNG-1006, [0072]-[0077]. Thus, a POSITA would have understood and found obvious that Greenberg's system is configured to deliver to the handpiece one at a time ("subsequently") fluid contained in the first, second, and third containers (e.g., containers 90, 94, 98). Alternatively or in addition, a POSITA would have found it obvious to use Greenberg's containers 90, 94, and 98 to sequentially apply three different treatment materials. For example, it would have been obvious to apply harsh particles (to "remove quickly and efficiently top surface skin layers"), followed by gentler particles (to "compensate for any serious abrasion"), followed by organic particles (to impart "to the skin substances that

help protect and nourish it"). EUNSUNG-1006, [0084], [0089], [0072]-[0077].

349. Thus, Greenberg discloses or renders it obvious that the system is configured to deliver to the handpiece one at a time fluid contained in the first container (e.g., container 90), fluid contained in the second container (e.g., container 94), and fluid contained in the third container (e.g., container 98).

4. Claim 8

[8] The system of claim 1, wherein the block is configured to control a flow of the first treatment fluid contained in the first container and the additional treatment fluid contained in the at least one additional container into the block with a valve when the first container and the at least one additional container are connected to the console.

350. It is my opinion that Greenberg renders obvious that the block (e.g., valve 108 or a subpart of apparatus 10 that houses valve 108) is configured to control a flow of the first treatment fluid contained in the first container (e.g., container 90) and the additional treatment fluid contained in the at least one additional container (e.g., container 94) into the block with a valve (e.g., valve 108) when the first container and the at least one additional container are connected to the console. See elements [1.1], [1.3], and [1.8]. Again, see elements [1.1], [1.3], and [1.8] as to the first container and the at least one additional container being connected to the console. See element [1.6] as to the first and at least one additional containers containing the first and additional treatment fluids.

351. As discussed for element [1.3], a POSITA would have understood that

one or more of (1) Greenberg's valve 108 and (2) a subpart of Greenberg's apparatus 10 that houses valve 108 constitute a "block" within the meaning of element [1.3]. Further, as shown in FIG. 5, Greenberg's valve system (***block***) is configured to selectively connect one of the supply containers 90, 94, 98 to the handle 102 depending on which container is selected among the supply containers via valve 106, such that Greenberg's valve system (***block***), which includes "valve 108," selectively receives fluid from the respective supply containers 90, 94, 98 (e.g., blue, red, and green paths in annotated FIG. 5 below).

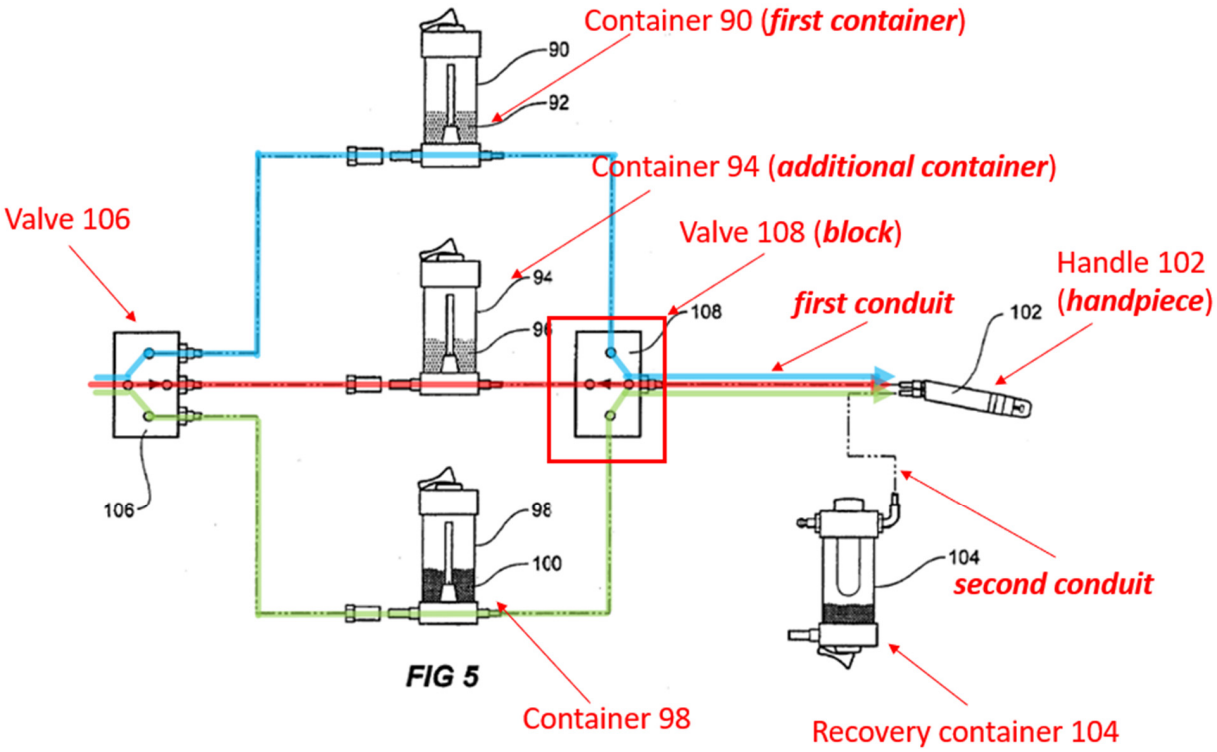

Greenberg, FIG. 5 (annotated)

352. As discussed in [1.8], Greenberg renders obvious that the system is configured to deliver the first treatment fluid contained in the first container and

the additional treatment fluid contained in the at least one additional container to the handpiece sequentially.

353. As shown in FIG. 5, Greenberg discloses: "A supply container can be **chosen** to be in communication with handle 102 and recovery container 104 by … valve 108 that than connects that supply container to the handle 102 and recovery container 104." EUNSUNG-1006, [0077], FIG. 5. Greenberg discloses an example where the system can choose from three different treatment materials, including (1) purely organic materials, (b) a mixture of abrasive particles such as aluminum oxide mixed with organic materials, and (c) abrasive particles that are coated with organic materials. EUNSUNG-1006, [0072]-[0077].

354. Thus, Greenberg discloses or renders it obvious that the block (e.g., valve 108 and/or a subpart of Greenberg's apparatus that houses valve 108) is configured to control a flow of the first treatment fluid contained in the first container (e.g., container 90) and the additional treatment fluid contained in the at least one additional container (e.g., container 94) into the block with a valve (e.g., valve 108) when the first container and the at least one additional container are connected to the console.

5. Claim 9

[9] The system of claim 1, wherein the system is configured to control a flow of the first treatment fluid contained in the first container to the handpiece through the block when each of the first container and the handpiece is connected to the console.

355. It is my opinion that Greenberg renders obvious that the system is configured to control a flow of the first treatment fluid contained in the first container (e.g., container 90) to the handpiece (e.g., handle 102) through the block (e.g., valve 108 or a subpart of apparatus 10 that houses valve 108) when each of the first container and the handpiece is connected to the console. See elements [1.1], [1.3], [1.8], and [8] above. Again, see elements [1.1], [1.3], [1.8], and [8] as to each of the first container and the handpiece is connected to the console. Further, as discussed in [1.3] and [8], Greenberg's system is configured to selectively make fluid communication between the containers and the handle to thereby control the flow of particles in each of the containers (e.g., particles in container 90 as ***first treatment fluid contained in the first container***) to handle 102 (***handpiece***) through the valve system (which uses valves 106/108) (***block***).

356. Importantly, different from claim 8 (which recites the "**block** is configured to control"), claim 9 recites that the "**system** is configured to control," indicating that the control mechanism is not in the "block." Based on the disclosure of the '287 patent, such a control mechanism can be controller 60 in the handpiece, which adjusts a flow rate of the first treatment fluid when the first container is connected to the handpiece through the block. Greenberg renders such a control mechanism obvious because as discussed above in Section X.4, each of FIG. 5's multiple containers (e.g., containers 90, 94, and 98) can be connected to FIG. 1's

console (e.g., apparatus 10) in the same manner as FIG. 1's supply container 18—for example, each of FIG. 5's multiple containers can "include projections 62 adapted to engage holding bores 64 on the apparatus" (EUNSUNG-1006, [0062]) and each of FIG. 5's multiple containers include "an inlet 39 connected to a regulator 42 having an inlet 44" with "the regulator controlling the amount of air entering the supply container." EUNSUNG-1006, [0053]. Thus, the flow from the first container (e.g., container 90) can also be controlled by regulator 42. *Id.* A POSITA would have found it obvious that Greenberg's regulator 42 is configured to control a flow of the first treatment fluid contained in the first container to the handpiece through the block when each of the first container and the handpiece is connected to the console.

357. Thus, Greenberg discloses that the system is configured to control a flow (e.g., using valves 106 and 108, and/or regulator 42) of the first treatment fluid contained in the first container (e.g., container 90) to the handpiece (e.g., handle 102) through the block (e.g., valve 108 and/or a subpart of Greenberg's apparatus that houses valve 108) when each of the first container and the handpiece is connected to the console.

6. Claim 10

[10] The system of claim 9, wherein the system is configured to separately control a flow of a second treatment fluid contained in the at least one additional container to the handpiece through the block when each of the first container, the at least one additional container, and the handpiece are connected to the

console.

358. It is my opinion that Greenberg renders obvious that the system is configured to separately control a flow of a second treatment fluid contained in the at least one additional container (e.g., container 94) to the handpiece (e.g., handle 102) through the block (e.g., valve 108 or a subpart of apparatus 10 that houses valve 108) when each of the first container, the at least one additional container, and the handpiece are connected to the console. See elements [1.1], [1.3], [1.8], and [8] above. Again, see elements [1.1], [1.3], [1.8], and [8] as to each of the first container, the at least one additional container, and the handpiece being connected to the console. Further, as discussed in [1.3], [8], and [9], Greenberg's system is configured to selectively (and thus ***separately***) make fluid communication between the containers and the handle to thereby control the flow of particles in each of the containers (e.g., particles in container 94/98 as ***second treatment fluid contained in the at least one additional container***) to handle 102 (***handpiece***) through the valve system (which uses valves 106/108) (***block***).

359. To the extent that the term "separately" is interpreted to require a separate control mechanism for the second treatment solution with respect to the first treatment solution (claim 9), it would have been obvious that Greenberg's regulator 42 acts as a separate control mechanism. For example, when the handpiece is connected to the additional container (e.g., container 94), regulator 42

is configured to control the flow of a second treatment solution in the additional container, ***separately*** from the flow of the first treatment solution in the first container (claim 9).

360. Importantly, different from claim 8 (which recites the "**block** is configured to control"), claim 10 recites that the "**system** is configured to control," indicating that the control mechanism is not in the "block." Based on the disclosure of the '287 patent, such a control mechanism can be controller 60 in the handpiece, which adjusts a flow rate of the first treatment fluid when the first container is connected to the handpiece through the block. Greenberg renders such a control mechanism obvious because as discussed above in Section X.4, each of FIG. 5's multiple containers (e.g., containers 90, 94, and 98) can be connected to FIG. 1's console (e.g., apparatus 10) in the same manner as FIG. 1's supply container 18—for example, each of FIG. 5's multiple containers can "include projections 62 adapted to engage holding bores 64 on the apparatus" (EUNSUNG-1006, [0062]) and each of FIG. 5's multiple containers include "an inlet 39 connected to a **regulator 42** having an inlet 44" with "the regulator controlling the amount of air entering the supply container." EUNSUNG-1006, [0053]. Thus, the flow from the first container (e.g., container 90) can also be controlled by regulator 42. *Id.* A POSITA would have found it obvious that Greenberg's regulator 42 is configured to separately control a flow of a second treatment fluid contained in the at least one

additional container to the handpiece through the block when each of the first container, the at least one additional container, and the handpiece are connected to the console.

361. Alternatively, a POSITA would have found it obvious to use a manifold to implement Greenberg's switching treatment fluids, by using a separate control for each treatment fluid. Using a manifold for selecting between different treatment fluids by using a separate control for each treatment fluid was well-known and would have been within a POSITA's general knowledge. EUNSUNG-1020, Abstract, 6:18-26 ("reversible electric motors 48, FIG. 3, or solenoids 59, FIG. 4, for **individually controlling** the operation of the respective valves 40"), 7:39-56, 8:17-26, FIGS. 1-4; EUNSUNG-1009, Abstract, 4:14-52 ("A knob 45 is provided on the internally threaded valve stem 42 to permit the operation of the valve 40"), FIGS. 1-3; EUNSUNG-1021, Abstract, 1:52-53 ("Stopcocks 24, 28, each have a handle thereon which is rotated to direct the flow of pressure laden fluids through catheter manifold 14), 2:17-21, 4:57-65, FIG. 1; EUNSUNG-1023, Abstract, FIG. 1. Based on this general knowledge, a POSITA would have found it obvious to implement Greenberg's functionality using a manifold for selecting between different treatment fluids by using a separate control for each treatment fluid. *Id*. Indeed, a POSITA would have viewed a manifold having a separate control for each treatment fluid as one of a finite number of options to achieve the

functionality described by Greenberg that would have been obvious to try. *Id*. A POSITA would have had a reasonable expectation of success to implement Greenberg's switching between different fluids and providing a single fluid output using such a manifold, as it would have merely involved a simple substitution of one well-known element for another to obtain predictable results. *Id*.

362. Thus, Greenberg discloses or renders it obvious that the system is configured to separately control a flow of a second treatment fluid contained in the at least one additional container (e.g., container 94) to the handpiece (e.g., handle 102) through the block (e.g., valve 108 and/or a subpart of Greenberg's apparatus that houses valve 108) when each of the first container, the at least one additional container, and the handpiece are connected to the console.

7. Claim 11

[11.pre] A skin treatment apparatus comprising:

363. It is my opinion that Greenberg renders obvious a skin treatment apparatus. See element [1.pre].

[11.1] a console that includes a fluid control member that is configured to be in fluid communication with at least a first container and a second container when the first container and the second container are connected to the fluid control member;

364. It is my opinion that Greenberg renders obvious a console (e.g., apparatus 10) that includes a fluid control member (e.g., valve 108 or a subpart of apparatus 10 that houses valve 108) that is configured to be in fluid communication

with at least a first container (e.g., container 90) and a second container when the first container and the second container (e.g., container 94) are connected to the fluid control member. See element [1.1].

365. Further, Greenberg discloses or renders obvious the ***fluid control member***. For example, as shown in FIG. 5, Greenberg describes a system of "valve 108" ***connected to*** respective supply containers 90, 94, 98 (***first*** and ***second containers***) and ***configured to be in fluid communication with*** the containers. EUNSUNG-1006, [0077]; *see* element [1.3].

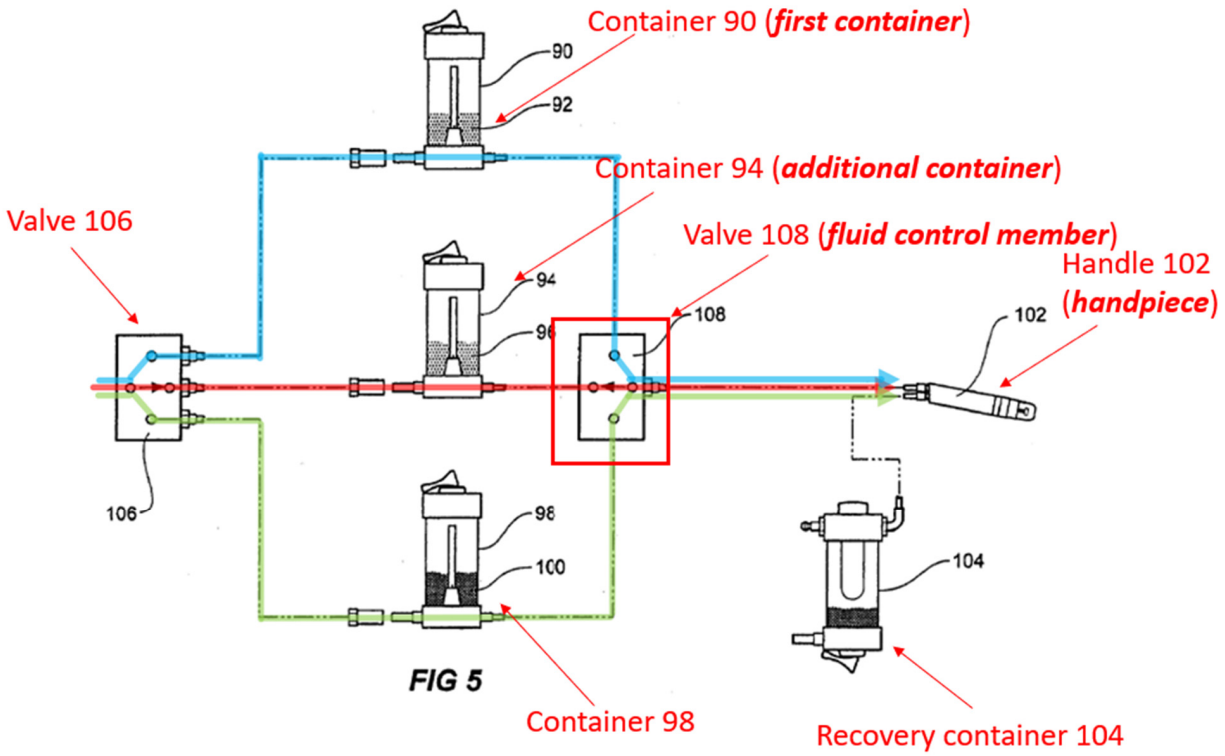

Greenberg, FIG. 5 (annotated)

366. Therefore, a POSITA would have understood and found obvious that

one or more of (1) Greenberg's valve 108 and (2) a subpart of Greenberg's apparatus 10 that houses valve 108 correspond to, and perform the operations of, the ***fluid control member*** recited in [1.3]. Indeed, this aligns with the '287 patent's limited disclosure, which is silent as to the term "fluid control member" while allegedly describing a "manifold" as having similar structure and functionality—a structure for interconnecting a plurality of pipes or fluid elements to control a flow of treatment material from containers, having multiple inlets and one outlet or multiple outlets and one inlet. EUNSUNG-1001, Abstract. As discussed in [1.3] above, using manifolds was nothing new and would have been within a POSITA's general knowledge.

367. The specification of the '287 patent does not mention the term "fluid control member," and this term appears to be referring to the "manifold" described in the specification, which is a structure for interconnecting a plurality of pipes or fluid elements, i.e., a structure configured to control a flow of treatment material from containers, as having multiple inlets and one outlet or multiple outlets and one inlet. EUNSUNG-1001, Abstract ("the manifold is configured to hold releasably a plurality of fluid sources and deliver fluid from at least one of the plurality of fluid sources to the handpiece assembly").

368. As shown in FIG. 5, multiple containers (e.g., containers 90, 94, and 98) feed into the handpiece (e.g., handle 102) via valve 108. EUNSUNG-1006,

[0077], FIG. 5. Further, Greenberg discloses: "A supply container can be **chosen** to be in communication with handle 102 and recovery container 104 by the use of valve 106 that controls air flow into the respective supply container and valve 108 that th[e]n connects that supply container to the handle 102 and recovery container 104." EUNSUNG-1006, [0077], FIG. 5. Thus, a POSITA would have understood that valve 108 or a subpart of Greenberg's apparatus 10 that houses valve 108 constitutes a "fluid control member."

369. Alternatively, to the extent Patent Owner argues that the claimed "fluid control member" requires the use of a manifold and that Greenberg's structure does not comprise a manifold, a POSITA would have found it obvious to use a manifold to implement the functionality of switching treatment fluids described by Greenberg. Manifolds were well-known devices for selecting between different fluids and would have been within a POSITA's general knowledge. EUNSUNG-1010, FIGS. 2A-2G, 7A-7D, [0086] ("Manifold 26 contains a valve which controls the routing of fluid connections between patient port 84 and either syringe bottom port 80 or transducer/saline port 82."), [0088]; EUNSUNG-1019, Abstract, 6:43-45 ("The ports, valves and conduits of the manifold may be configured in any manner that permits the desired flow of fluid through the manifold"), 10:30-44, FIGS. 7-10; EUNSUNG-1020, Abstract ("Apparatus for sequentially dispensing a plurality of solutions through an

intravenous supply catheter includes a disposable tubing manifold…"), 7:39-56, 8:17-26, FIGS. 1-4; EUNSUNG-1021, Abstract, 4:57-65, FIG. 1; EUNSUNG-1022, Abstract, FIGS. 1-4. Based on this general knowledge, a POSITA would have found it obvious to implement Greenberg's functionality using a manifold because manifolds were known to provide the switching between different fluids and providing a single fluid output, as described by Greenberg. *Id*. Indeed, a POSITA would have viewed a manifold as one of a finite number of options to achieve the functionality described by Greenberg that would have been obvious to try. *Id*. A POSITA would have had a reasonable expectation of success to implement Greenberg's switching between different fluids and providing a single fluid output using a manifold, as it would have merely involved a simple substitution of one well-known element for another to obtain predictable results. *Id*.

370. Thus, Greenberg discloses or renders obvious a console (e.g., apparatus 10) that includes a fluid control member (e.g., valve 108) that is configured to be in fluid communication with at least a first container (e.g., container 90) and a second container (e.g., container 94) when the first container and the second container are connected to the fluid control member.

[11.2] a handpiece assembly configured to contact a skin surface of a subject;

371. It is my opinion that Greenberg renders obvious a handpiece assembly

(e.g., handle 102) configured to contact a skin surface of a subject. See element [1.2].

[11.3] a waste conduit configured to be in fluid communication with the handpiece assembly and a vacuum source to move waste away from the handpiece assembly when the waste conduit and the handpiece assembly are each connected to the console; and

372. It is my opinion that Greenberg renders obvious a waste conduit configured to be in fluid communication with the handpiece assembly (e.g., handle 102) and a vacuum source (e.g., vacuum pump 12) to move waste away from the handpiece assembly when the waste conduit and the handpiece assembly are each connected to the console. See element [1.1].

373. Further, as discussed in [1.4]-[1.5], Greenberg's system includes "recovery container" and "vacuum pump" (***vacuum source***) to "provide[] for an air flow through the recovery container, hand tool and the selected supply container in communication with same, drawing said particles from the supply container through the hand tool and into the recovery container." EUNSUNG-1006, [0017], [0052], FIG. 3. As discussed in [1.5] and shown in FIG. 5 (below), a POSITA would have understood and found obvious that Greenberg's vacuum pump 12 is fluidly connected to the recovery container 104. While FIG. 5 does not label the tube connecting handle 102 to recovery container 104 and similarly between recovery container 104 and the vacuum pump in FIG. 5 (below), it would have been obvious that this tube forms the ***waste conduit*** as required in [11.3]. As

discussed above regarding [1.4], the vacuum source is located in the console. As shown in FIG. 1 and FIG. 5, this waste conduit is connected to the ***console*** ([11.1]). Further, as discussed in [1.5]-[1.6], Greenberg's handle (***handpiece assembly***) is connected to the ***console*** ([11.1]).

374. Greenberg discloses: "the pneumatic source is a vacuum pump" (EUNSUNG-1006, [0026], [0004], [0049]-[0059], [0066]) and "said pneumatic source provides for an air flow through the recovery container, hand tool and the selected supply container in communication with same, drawing said particles from the supply container through the hand tool and **into the recovery container**." EUNSUNG-1006, [0017], FIG. 3, [0052]. Thus, it would have been obvious that, in FIG. 5, a vacuum source (e.g., vacuum pump 12) is connected to recovery container 104. "The stream of particles then impinges on the surface against which the aperture is positioned causing micro-abrasions and is subsequently drawn into the recovery container together with any abraded surface debris." EUNSUNG-1006, [0052]. While modified FIG. 5 does not label the tube connecting handle 102 to recovery container 104 and similarly between recovery container 104 and the vacuum pump, it would have been obvious that this tube forms a "waste conduit" within the meaning of element [11.3].

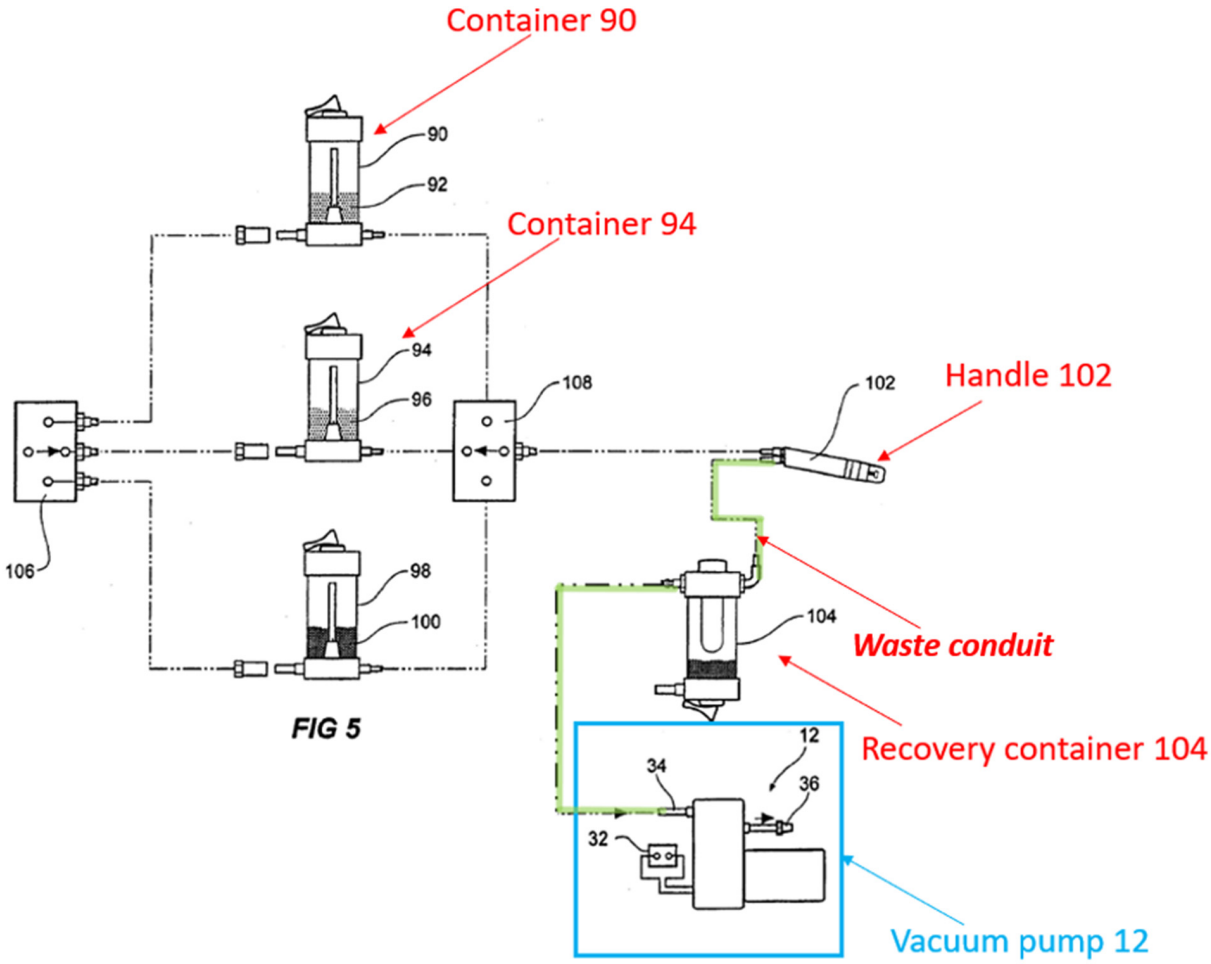

Modified FIG. 5 of Greenberg (annotated)

375. Thus, Greenberg discloses or renders obvious a waste conduit (annotated in green) configured to be in fluid communication with the handpiece assembly (e.g., handle 102) and a vacuum source (e.g., vacuum pump 12) to move waste away from the handpiece assembly when the waste conduit and the handpiece assembly are each connected to the console.

[11.4] wherein when each of the first container and the second container are connected to the console, the fluid control member is configured to be in fluid communication with each of the first container and the second container;

376. As discussed above regarding element [11.1], Greenberg discloses that, when each of the first container (e.g., container 90) and the second container (e.g., container 94) are connected to the console (e.g., apparatus 10), the fluid control member (e.g., valve 108) is configured to be in fluid communication with each of the first container and the second container. It is my opinion that Greenberg renders obvious that when each of the first container (e.g., container 90) and the second container (e.g., container 94) are connected to the console (e.g., apparatus 10), the fluid control member (e.g., valve 108 or a subpart of apparatus 10 that houses valve 108) is configured to be in fluid communication with each of the first container and the second container. See elements [1.1], [1.3], [1.6], [1.8], and [11.1].

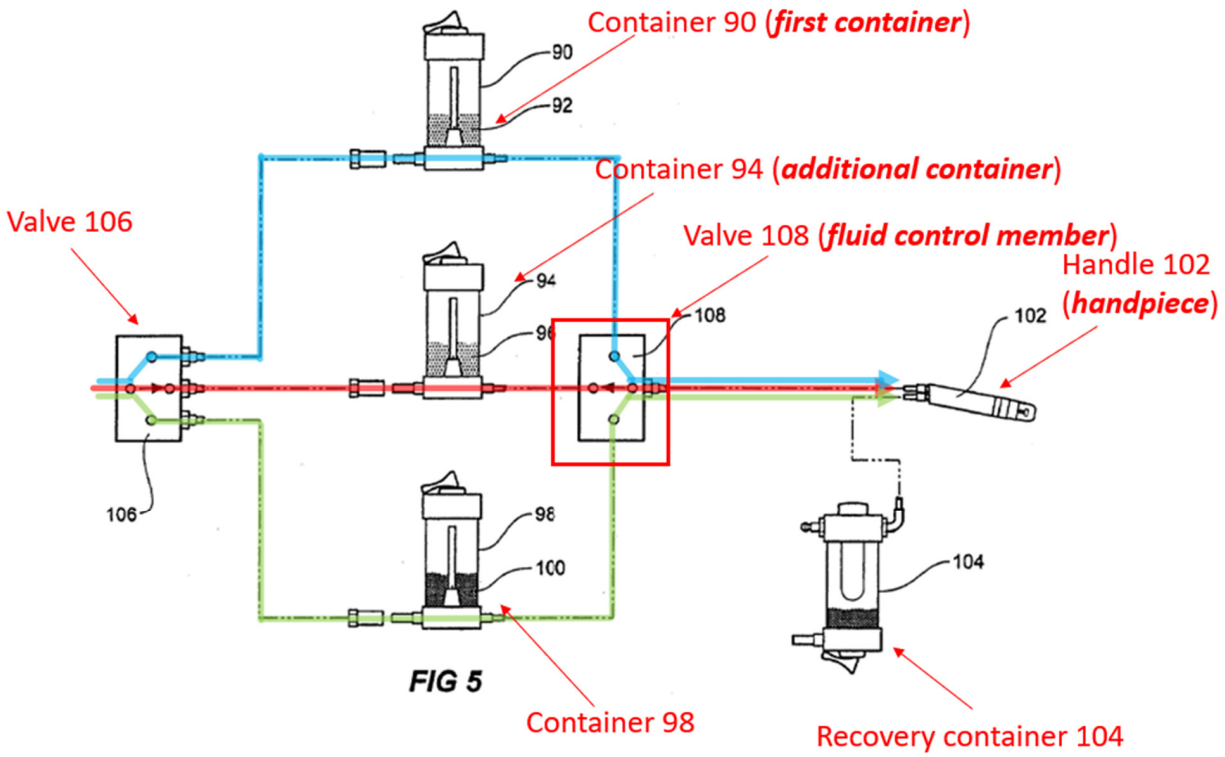

Greenberg, FIG. 5 (annotated)

[11.5] wherein when the handpiece assembly is connected to the console, the fluid control member is configured to be in fluid communication with the handpiece assembly;

377. It is my opinion that Greenberg renders obvious that when the handpiece assembly (e.g., handle 102) is connected to the console (e.g., apparatus 10), the fluid control member (e.g., valve 108 or a subpart of apparatus 10 that houses valve 108) is configured to be in fluid communication with the handpiece assembly. See elements [1.1], [1.3], [1.6], [1.8], and [11.1]. For example, as discussed in [11.3] and [1.5]-[1.6], Greenberg's handle (***handpiece assembly***) is connected to the ***console*** ([11.1]). As discussed in [11.1] and shown in FIG. 5,

Greenberg's ***fluid control member*** is ***configured to be in fluid communication with*** its handle.

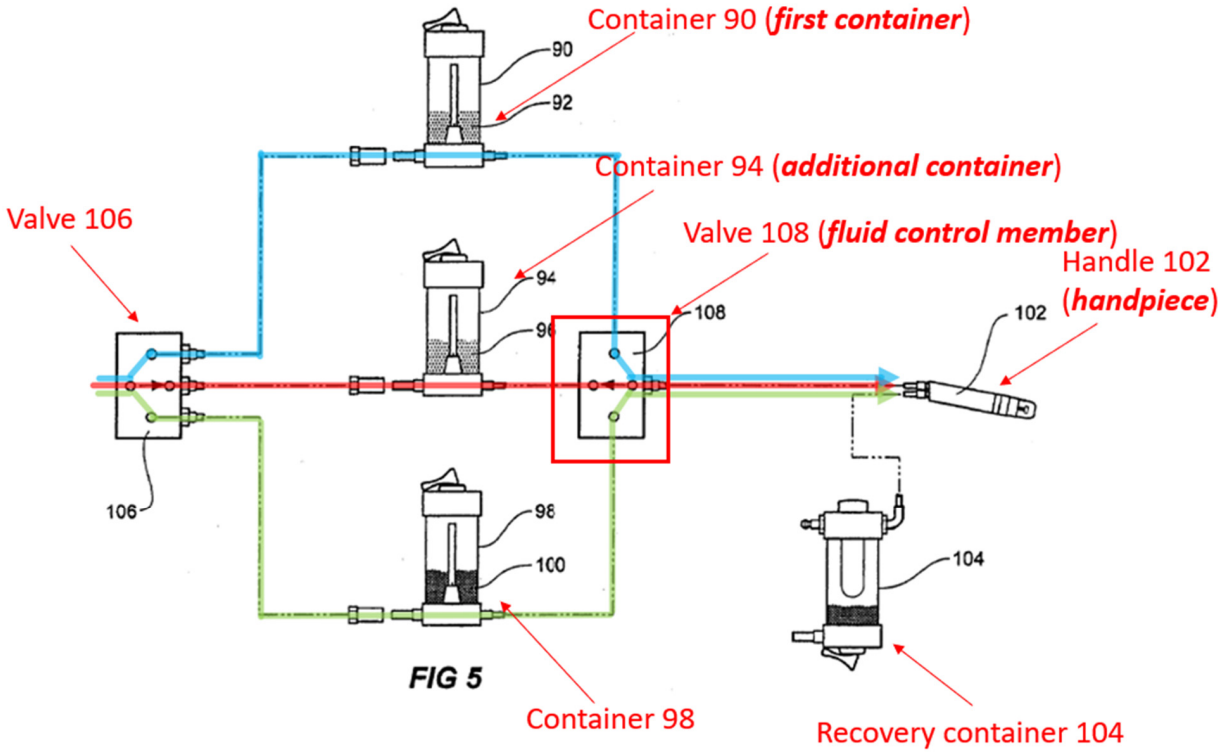

Greenberg, FIG. 5 (annotated)

378. As shown in FIG. 5, multiple containers (e.g., containers 90, 94, and 98) feed into the handpiece (e.g., handle 102) via valve 108. EUNSUNG-1006, [0077], FIG. 5. Further, Greenberg discloses: "A supply container can be **chosen** to be in communication with handle 102 and recovery container 104 by the use of valve 106 that controls air flow into the respective supply container and valve 108 that th[e]n connects that supply container to the handle 102 and recovery container 104." EUNSUNG-1006, [0077], FIG. 5.

379. Thus, Greenberg discloses or renders it obvious that when the handpiece assembly (e.g., handle 102) is connected to the console (e.g., apparatus 10), the fluid control member (e.g., valve 108) is configured to be in fluid communication with the handpiece assembly.

[11.6] wherein when (i) each of the first container and the second container contains treatment material, (ii) the first container and the second container are connected to the console, and (iii) the handpiece assembly is connected to the console, the skin treatment apparatus is configured to selectively draw treatment material from the first container or the second container to the handpiece assembly using, at least in part, a vacuum created along a distal end of the handpiece assembly by the vacuum source.

380. It is my opinion that Greenberg renders obvious that when (i) each of the first container (e.g., container 90) and the second container (e.g., container 94) contains treatment material, (ii) the first container and the second container are connected to the console (e.g., apparatus 10), and (iii) the handpiece assembly is connected to the console, the skin treatment apparatus is configured to selectively draw treatment material from the first container or the second container to the handpiece assembly (e.g., handle 102) using, at least in part, a vacuum created along a distal end of the handpiece assembly by the vacuum source (e.g., vacuum pump 12). See elements [1.1], [1.3], [1.6], [1.8], [11.1], and [11.3]-[11.5].

381. As I discussed in [1.6] above, Greenberg discloses: "the user can select from different supply containers and thus different particles each of which performs different types of treatment such as abrasion." EUNSUNG-1006,

Abstract, [0077], FIG. 5. As shown in FIG. 5, Greenberg's device can comprise three supply containers (e.g., containers 90, 94, and 98). EUNSUNG-1006, [0077], FIG. 5. Greenberg discloses: "Preferably at least one said supply container includes organic type particles" (EUNSUNG-1006, [0023]) and "[t]he organic particles may not only contain essential oils but they may also contain fragrances that on impact with the skin impart some of those properties." EUNSUNG-1006, [0082]. Greenberg also discloses that "other additions to the synthetic or organic materials may be used… such as tea tree oils and essences, colourings and so on." EUNSUNG-1006, [0087], [0011]-[0012]. Greenberg discloses an example where the system can choose from three different treatment materials, including (1) purely organic materials, (b) a mixture of abrasive particles such as aluminum oxide mixed with organic materials, and (c) abrasive particles that are coated with organic materials. EUNSUNG-1006, [0072]-[0077].

382. As discussed above in Section X.4 and regarding claim 1, it would have been obvious that in FIG. 5, a vacuum source (e.g., vacuum pump 12) is connected to recovery container 104. Greenberg also discloses that "said pneumatic source provides for an air flow through the recovery container, hand tool and the selected supply container in communication with same, drawing said particles from the supply container through the hand tool and into the recovery container, said hand tool positioned on a surface to be treated **and including an**

aperture so located that particles passing through said hand tool are caused to impinge on the surface thereby treating it." EUNSUNG-1006, [0017], FIG. 3. Greenberg explains: "The handle includes an **aperture 40, which is positioned against the surface to be treated**, and which then causes air and thus particles to be drawn…" EUNSUNG-1006, [0052]. "[A]fter the vacuum pump 12 has been activated… [t]he appropriate hand tool is then used **with its aperture 40 positioned against a surface to be treated**." EUNSUNG-1006, [0059]. Thus, a POSITA would have understood or found obvious that Greenberg discloses creating a vacuum along a distal end (e.g., at aperture 40) of the handpiece assembly by pressing aperture 40 against the surface to be treated, causing the particles to be drawn from the supply container.

383. Thus, Greenberg discloses or renders it obvious that when (i) each of the first container (e.g., container 90) and the second container (e.g., container 94) contains treatment material (e.g., tea tree oils), (ii) the first container and the second container are connected to the console (e.g., apparatus 10), and (iii) the handpiece assembly (e.g., handle 102) is connected to the console, the skin treatment apparatus is configured to selectively draw treatment material from the first container or the second container to the handpiece assembly using, at least in part, a vacuum created along a distal end (e.g., at aperture 40) of the handpiece assembly by the vacuum source (e.g., vacuum pump 12).

8. Claim 12

[12] The skin treatment apparatus of claim 11, wherein treatment material from the first container and the second container are configured to be drawn to the handpiece assembly sequentially.

384. It is my opinion that Greenberg renders obvious that treatment material from the first container (e.g., container 90) and the second container (e.g., container 94) are configured to be drawn to the handpiece assembly (e.g., handle 102) sequentially. See element [1.8]. In fact, the limitations of claim 12 are substantially the same as [1.8], and the analysis of [1.8] similarly applies here.

385. Greenberg discloses: "the apparatus contains separate abrasive and fragrant particles and that a user is firstly treated with the highly abrasive particles and **subsequently** with the organic ones that assist in leaving a residual layer on the skin." EUNSUNG-1006, [0084]. "For example, one may first wish to be treated with a harsh particle to remove quickly and efficiently top surface skin layers," and "**[s]ubsequently** one may wish to use the gentler but still slightly abrasive organic particles that compensate for any serious abrasion whilst imparting to the skin substances that help protect and nourish it." EUNSUNG-1006, [0089]. Greenberg discloses an example where the system can choose from three different treatment materials, including (1) purely organic materials, (b) a mixture of abrasive particles such as aluminum oxide mixed with organic materials, and (c) abrasive particles that are coated with organic materials.

EUNSUNG-1006, [0072]-[0077].

386. Thus, Greenberg discloses or renders it obvious that the treatment material from the first container and the second container are configured to be drawn to the handpiece assembly sequentially.

9. Claim 14

[14] The skin treatment apparatus of claim 11, wherein the console comprises the vacuum source.

387. It is my opinion that Greenberg renders obvious that the console (e.g., apparatus 10) comprises the vacuum source (e.g., vacuum pump 12). See element [1.4].

10. Claim 15

[15] The skin treatment apparatus of claim 11, wherein the skin treatment apparatus is configured to deliver a single treatment material from the first container to a patient's skin.

388. It is my opinion that Greenberg renders obvious that the skin treatment apparatus (e.g., apparatus 10) is configured to deliver a single treatment material from the first container (e.g., container 90) to a patient's skin. See elements [1.1], [1.3], [1.6], [1.7], [1.8]. As discussed in [1.8], for example, Greenberg's apparatus is configured to deliver different treatment fluids contained in respective containers to the handpiece ***sequentially***.

389. Greenberg discloses: "the apparatus contains separate abrasive and fragrant particles and that a user is firstly treated with the highly abrasive particles

and **subsequently** with the organic ones that assist in leaving a residual layer on the skin." EUNSUNG-1006, [0084]. "For example, one may first wish to be treated with a harsh particle to remove quickly and efficiently top surface skin layers," and "**[s]ubsequently** one may wish to use the gentler but still slightly abrasive organic particles that compensate for any serious abrasion whilst imparting to the skin substances that help protect and nourish it." EUNSUNG-1006, [0089]. A POSITA would have recognized that when Greenberg's valve 108 connects the handpiece to a first container (e.g., container 90), the system is configured to deliver a single treatment material from the first container to a patient's skin.

390. Also, in the event that the user only needs to be treated with a first material from a first container (e.g., container 90), a POSITA would have used Greenberg's valve 108 to connect the handpiece to a first container (e.g., container 90), so that the system is configured to deliver a single treatment material from the first container to a patient's skin.

11. Claim 16

[16] The skin treatment apparatus of claim 11, wherein the treatment material in the first container is a skin treatment fluid.

391. It is my opinion that Greenberg renders obvious that the treatment material in the first container (e.g., container 90) is a skin treatment fluid. As discussed above regarding element [1.3], a POSITA would have understood

Greenberg's particles constitute "fluid" for skin treatment (***skin treatment fluid***) within the meaning of element [1.3]. EUNSUNG-1001, 5:47-52; EUNSUNG-1006, [0017], [0040].

392. Thus, Greenberg discloses this limitation or renders this limitation obvious.

12. Claim 22

[22.pre] A system for treating skin, the system comprising:

393. It is my opinion that Greenberg renders obvious a system for treating skin. See element [1.pre].

[22.1] a console configured to receive a first container and at least one additional container;

394. It is my opinion that Greenberg renders obvious a console (e.g., apparatus 10) configured to receive a first container (e.g., container 90) and at least one additional container (e.g., container 94). See elements [1.1] and [1.6].

[22.2] a collection lumen configured to be in fluid communication with the first container and the at least one additional container when the first container and the at least one additional container are connected to the console; and

395. It is my opinion that Greenberg renders obvious a collection lumen (e.g., a space within valve 108 or handle 102) configured to be in fluid communication with the first container (e.g., container 90) and the at least one additional container (e.g., container 94) when the first container and the at least one additional container are connected to the console. See elements [1.1], [1.3],

and [1.6]. As discussed above regarding [1.3], Greenberg renders obvious a block (e.g., valve 108 or a subpart of apparatus 10 that houses valve 108) that is configured to selectively be in fluid communication with the first container and the additional container. A POSITA would have found it obvious that this block has a "collection lumen" (e.g., a passage or space within valve 108) that is configured to selectively be in fluid communication with the first container and the additional container. EUNSUNG-1006, [0077], FIG. 5.

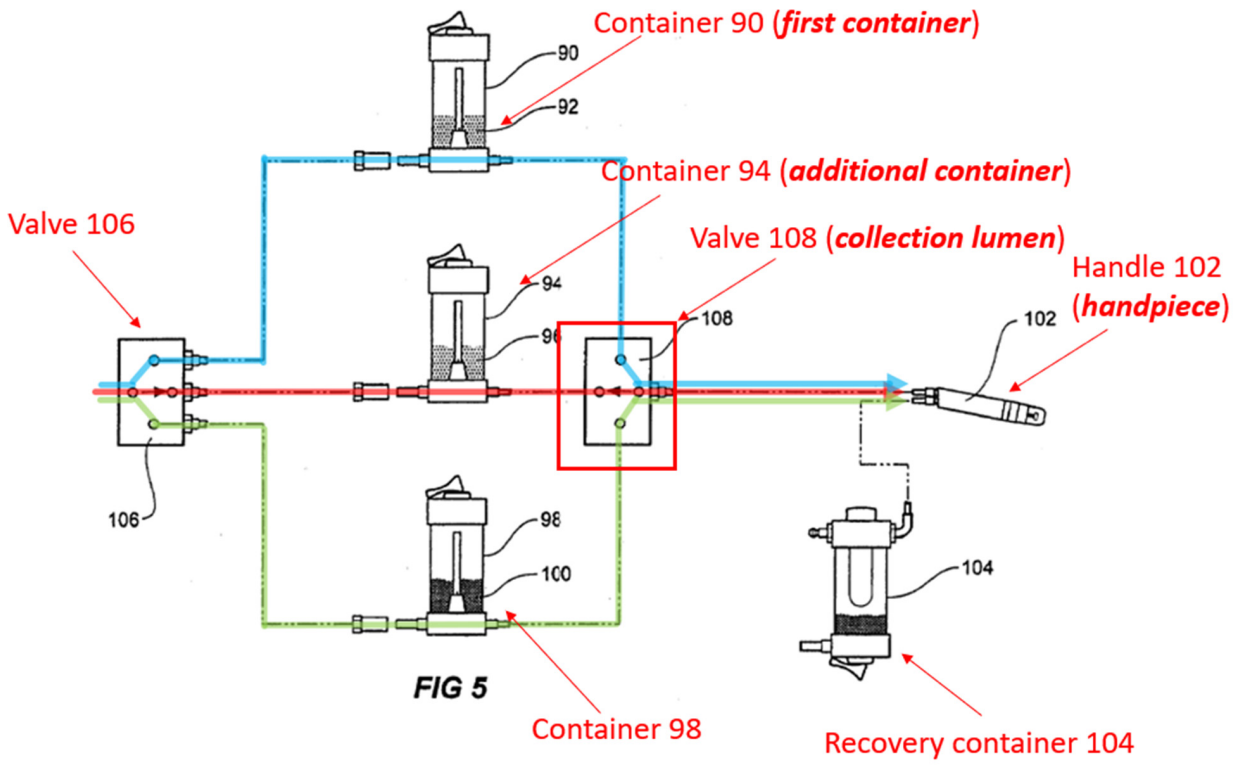

Greenberg, FIG. 5 (annotated)

396. As discussed above in Section X.4, it would have been obvious that in FIG. 5, a vacuum source (e.g., vacuum pump 12) is connected to recovery

container 104. Greenberg also discloses that "said pneumatic source provides for an air flow through the recovery container, hand tool and the selected supply container in communication with same, drawing said particles from the supply container through the hand tool and into the recovery container, said hand tool positioned on a surface to be treated **and including an aperture so located that particles passing through said hand tool are caused to impinge on the surface thereby treating it**." EUNSUNG-1006, [0017], FIG. 3. Greenberg explains: "The handle includes an **aperture 40, which is positioned against the surface to be treated**, and which then causes air and thus particles to be drawn…" EUNSUNG-1006, [0052]. Greenberg explains "after the vacuum pump 12 has been activated… [t]he appropriate hand tool is then used **with its aperture 40 positioned against a surface to be treated**." EUNSUNG-1006, [0059]. Thus, a POSITA would have understood that Greenberg's hand tool (e.g., handle 102) includes a collection lumen (e.g., a space within handle 102) configured to be in fluid communication with the first container (e.g., container 90) and the at least one additional container (e.g., container 94) when the first container and the at least one additional container are connected to the console (e.g., apparatus 10).

397. Alternatively or in addition, a POSITA would have understood and found obvious that other fluid passages and spaces defined in Greenberg's system would constitute the ***collection lumen***. For example, a POSITA would have found

a passage/space within one or more of (1) handle 102 and (2) tubing connecting handle 102 to valve 108 to constitute a "collection lumen." EUNSUNG-1006, [0017], [0052], [0059], FIG. 5. This also align with the '287 patent's disclosure of the "lumen" 90, 92 in the handpiece assembly 18. EUNSUNG-1001, 7:65-8:12.

398. Further, as discussed in [1.3], even assuming that a manifold is required for claim 22, a POSITA would have found it obvious to use a manifold having a collection lumen to implement Greenberg's switching treatment fluids. Indeed, a manifold was well-known for including a tube or channel (***collection lumen***) for selectively flowing different treatment fluids. EUNSUNG-1021, Abstract, 1:52-53, 2:17-21, 4:57-65, FIG. 1 (showing manifold fluid tube 16); EUNSUNG-1023, Abstract, FIGS. 1-2 (showing in-line flow channel 22). Alternatively, a POSITA would have found it obvious to use a manifold containing a collection lumen to implement Greenberg's switching treatment fluids, by using a separate control for each treatment fluid. Indeed, using a manifold containing a collection lumen for selecting between different treatment fluids by using a separate control for each treatment fluid was well-known and would have been within a POSITA's general knowledge. EUNSUNG-1020, Abstract, 6:18-26, 7:39-56, 8:17-26, FIGS. 1-4 (showing trunk tube 32); EUNSUNG-1009, Abstract, 4:14-52, FIGS. 1-3 (showing trunk tube 32); EUNSUNG-1021, Abstract, 1:52-53, 2:17-21, 4:57-65, FIG. 1 (showing manifold fluid tube 16); EUNSUNG-1023,

Abstract, FIGS. 1-2 (showing in-line flow channel 22). Based on this general knowledge, a POSITA would have found it obvious to implement Palmer's functionality using a manifold containing a collection lumen for selecting between different treatment fluids by using a separate control for each treatment fluid. *Id*

399. Alternatively or in addition, a POSITA would have found it obvious to use a collection lumen to direct the flow of the treatment materials to the aperture 40 in Greenberg's handpiece (e.g., handle 102). EUNSUNG-1006, [0052] ("The stream of particles then impinges on the surface against which the aperture is positioned causing micro-abrasions"), [0059]. Using a collection lumen connected with the supply containers to direct the treatment material to a handpiece's aperture was well-known and would have been within a POSITA's general knowledge. EUNSUNG-1024, Abstract ("The supply lumen directs a flow of abrasive particulate in a first direction"), 5:22-40 (nozzle 101 is positioned to direct the flow of crystals from the lumen 67 into the window 94), FIG. 5; EUNSUNG-1004, [0064] ("where they flow out of the cannula 16 through openings 16b and are applied to the skin"), FIGS. 1A-1B, EUNSUNG-1020, Abstract, 6:18-48, 7:16-56, 8:17-26, FIGS. 1-4. Based on this general knowledge, a POSITA would have found it obvious to use a collection lumen connected to the supply containers to direct the treatment materials to Greenberg's aperture 40. *Id*. Indeed, a POSITA would have viewed a collection lumen as one of a finite number of options to

achieve the functionality described by Greenberg that would have been obvious to try. *Id*. A POSITA would have had a reasonable expectation of success to use a collection lumen, as it would constitute the use of a known technique to improve similar devices in the same way. *Id*.

400. Thus, Greenberg discloses or renders obvious a collection lumen (e.g., a space within valve 108 or handle 102) configured to be in fluid communication with the first container (e.g., container 90) and the at least one additional container (e.g., container 94) when the first container and the at least one additional container are connected to the console.

[22.3] a handpiece having a working end, the working end of the handpiece being configured to contact skin tissue of a subject during use;

401. It is my opinion that Greenberg renders obvious a handpiece (e.g., handle 102) having a working end (e.g., the end comprising aperture 40), the working end of the handpiece being configured to contact skin tissue of a subject during use. Greenberg discloses that "said hand tool positioned on a surface to be treated **and including an aperture so located that particles passing through said hand tool are caused to impinge on the surface thereby treating it**." EUNSUNG-1006, [0017], FIG. 3, [0052]. Greenberg explains, "after the vacuum pump 12 has been activated… [t]he appropriate hand tool is then used **with its aperture 40 positioned against a surface to be treated**." EUNSUNG-1006, [0059]. Thus, Greenberg discloses or renders obvious a handpiece (e.g., handle

102) having a working end (e.g., the end comprising aperture 40), the working end of the handpiece being configured to contact skin tissue of a subject during use.

[22.4] wherein the working end of the handpiece is configured to be placed in fluid communication with a vacuum source to create a suction force along a distal end of the handpiece when the vacuum source is activated and the handpiece is connected to the console and wherein the working end of the handpiece is configured to be placed in fluid communication with the first container or the at least one additional container through the collection lumen; and

402. It is my opinion that Greenberg renders obvious that the working end of the handpiece (e.g., handle 102) is configured to be placed in fluid communication with a vacuum source (e.g., vacuum pump 12) to create a suction force along a distal end of the handpiece when the vacuum source is activated and the handpiece is connected to the console and wherein the working end of the handpiece is configured to be placed in fluid communication with the first container or the at least one additional container (e.g., container 94) through the collection lumen (e.g., a space within valve 108 or handle 102). See elements [1.1], [1.6], and [22.2]. Further, see elements [1.4]-[1.5], [22.3] as to the working end of the handpiece being in fluid communication with a vacuum source, and the handpiece being connected to the console.

403. As discussed for element [22.2], Greenberg discloses or renders obvious a collection lumen (e.g., a space within valve 108 or handle 102) configured to be in fluid communication with the first container (e.g., container 90)

and the at least one additional container (e.g., container 94) when the first container and the at least one additional container are connected to the console. Further, as discussed further in [11.3] and [11.6], it would have been obvious that Greenberg's vacuum pump 12 (***vacuum source***) is connected to recovery container 104 and, when activated, draws the treatment material from the supply container to the handpiece by creating a vacuum (***suction force***) along a distal end (e.g., where aperture 40 is defined) of the handpiece. EUNSUNG-1006, [0017], [0052], [0059], FIGS. 3 and 5. As discussed above in Section X.4, it would have been obvious that in FIG. 5, a vacuum source (e.g., vacuum pump 12) is connected to recovery container 104. In operation, Greenberg discloses that this vacuum source draws the treatment material from the supply container to a distal end of the handpiece (e.g., the end comprising aperture 40) for application to the skin, and then into the recovery container. EUNSUNG-1006, [0017] ("said pneumatic source provides for an air flow through the recovery container, hand tool and the selected supply container in communication with same, **drawing said particles from the supply container through the hand tool and into the recovery container**, said hand tool positioned on a surface to be treated and including an aperture so located that particles passing through said hand tool are caused to impinge on the surface thereby treating it."), [0052] ("The handle includes an **aperture 40, which is positioned against the surface to be treated**, and which then causes air and thus

particles to be drawn…"), [0059] ("after the vacuum pump 12 has been activated… [t]he appropriate hand tool is then used **with its aperture 40 positioned against a surface to be treated**."), FIGS. 3 and 5.

404. Moreover, Greenberg's ***collection lumen*** (e.g., a passage/space within valve 108 or handle 102; [22.2]) is fluidly connected to the working end of the handle 102, as illustrated in FIG. 5. As discussed for [22.2], Greenberg's ***collection lumen*** is in fluid communication with the first and additional containers (e.g., containers 90, 94, 98). Thus, it would have been understood and obvious that, in Greenberg, the working end of the handpiece is in fluid communication with the first or additional container through the collection lumen. Accordingly, Greenberg discloses or renders it obvious that the working end (e.g., the end comprising aperture 40) of the handpiece (e.g., handle 102) is configured to be placed in fluid communication with a vacuum source (e.g., vacuum pump 12) to create a suction force along a distal end (e.g., the end comprising aperture 40) of the handpiece when the vacuum source is activated and the handpiece is connected to the console and wherein the working end of the handpiece is configured to be placed in fluid communication with the first container (e.g., container 90) or the at least one additional container (e.g., container 94) through the collection lumen (e.g., a space within valve 108 or handle 102).

[22.5] a supply conduit that places the collection lumen in fluid communication with the working end of the handpiece when the handpiece is connected to the

console;

405. It is my opinion that Greenberg renders obvious a supply conduit that places the collection lumen (e.g., a space within valve 108 or handle 102) in fluid communication with the working end of the handpiece (e.g., the end comprising aperture 40) when the handpiece is connected to the console. See elements [22.2] and [22.4] above. Again, as discussed for [22.2] and [22.4] above, Greenberg's ***collection lumen*** (e.g., a passage/space within valve 108 or handle 102; [22.2]) is fluidly connected to the working end of the handle 102, as illustrated in FIG. 5 (below).

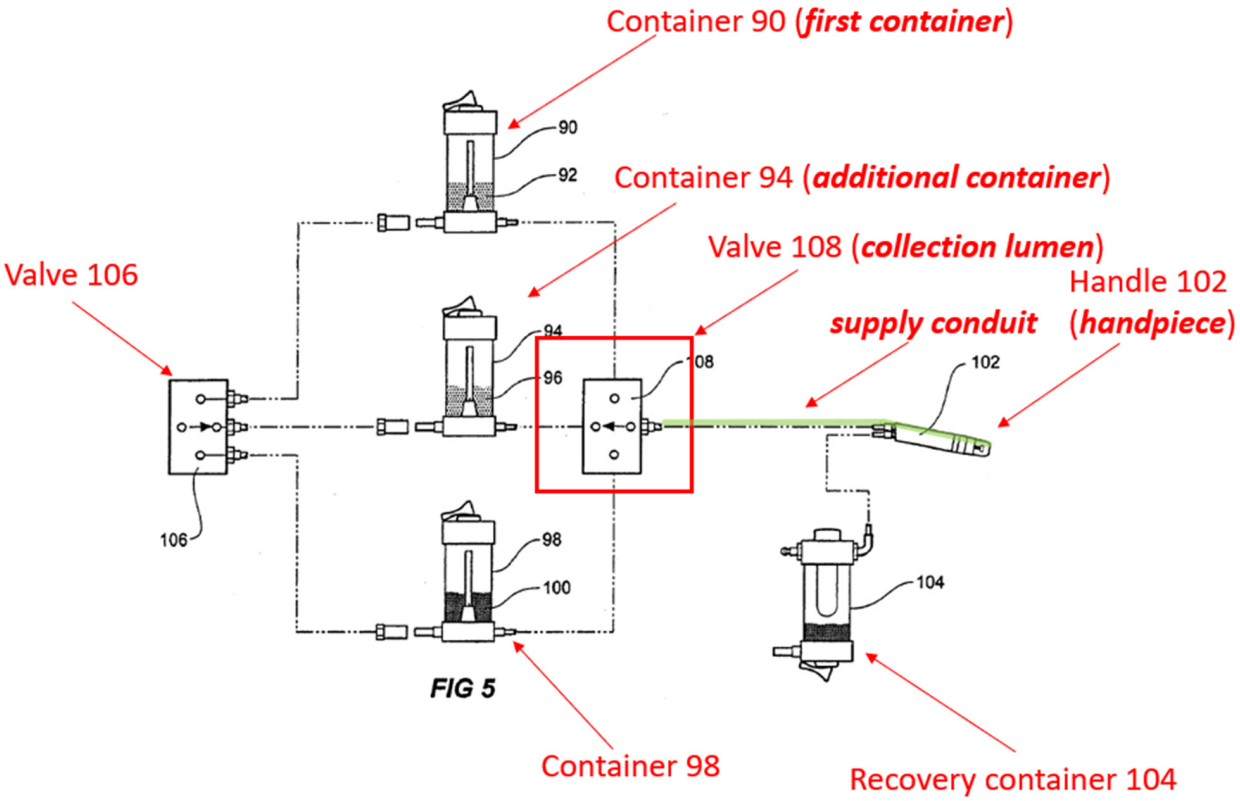

Greenberg, FIG. 5 (annotated)

406. As illustrated above, Greenberg's ***collection lumen*** is in fluid communication with the working end (e.g., the end comprising aperture 40) of the handle via a ***supply conduit*** (annotated in green). Further, as discussed above in Section X.4, it would have been obvious that in FIG. 5, a vacuum source (e.g., vacuum pump 12) is connected to recovery container 104. In operation, Greenberg discloses that this vacuum source draws the treatment material from the supply container to a distal end of the handpiece (e.g., the end comprising aperture 40) for application to the skin, and then into the recovery container. EUNSUNG-1006, [0017], [0052], [0059], FIGS. 3 and 5. As shown in FIG. 5, a tubing connects valve 108 to handle 102. EUNSUNG-1006, FIG. 5.

407. A POSITA would have found it obvious that the handpiece (e.g., handle 102) has a supply conduit (e.g., a space within the tubing between valve 108 and handle 102 or a space within handle 102) that places the collection lumen (e.g., a space within valve 108 or handle 102) in fluid communication with the working end (e.g., the end comprising aperture 40) of the handpiece when the handpiece is connected to the console.

[22.6] wherein each of the first container and the at least one additional container includes treatment materials, and wherein treatment materials from the first container and the at least one additional container are configured to be delivered to the supply conduit sequentially when the first container and the at least one additional container are connected to the console.

408. It is my opinion that Greenberg renders obvious that each of the first

container (e.g., container 90) and the at least one additional container (e.g., container 94) includes treatment materials, and wherein treatment materials from the first container and the at least one additional container are configured to be delivered to the supply conduit sequentially when the first container and the at least one additional container are connected to the console. See elements [1.1], [1.6], and [1.8].

13. Claim 23

[23.1] The system of claim 22, wherein the console comprises the vacuum source;

409. It is my opinion that Greenberg renders obvious that the console (e.g., apparatus 10) comprises the vacuum source (e.g., vacuum pump 12). See element [1.4].

[23.2] wherein the handpiece is in fluid communication with the vacuum source and a waste container through a waste conduit when the handpiece and the waste container are connected to the console; and

410. Overall, see element [1.6] as to the handpiece and the waste container being connected to the console. Also see elements [1.7] and [11.3] as to the handpiece being in fluid communication with the vacuum source and a waste container through a waste conduit (i.e., "second conduit" in [1.7]).

411. Trueba states: "… one or more of the bioactive agents from the reservoirs 54, 56 can be delivered from dispenser 30. **The multiple bioactive agents may be administered sequentially or simultaneously**." Trueba 11:21-24.

412. It is my opinion that Greenberg renders obvious that the handpiece (e.g., handle 102) is in fluid communication with the vacuum source (e.g., vacuum pump 12) and a waste container (e.g., recovery container 104) through a waste conduit when the handpiece and the waste container are connected to the console. See element [1.1].

413. Greenberg discloses: "the pneumatic source is a vacuum pump" (EUNSUNG-1006, [0026], [0004], [0049]-[0059], [0066]) and "said pneumatic source provides for an air flow through the recovery container, hand tool and the selected supply container in communication with same, drawing said particles from the supply container through the hand tool and **into the recovery container**." EUNSUNG-1006, [0017], FIG. 3, [0052]. Thus, it would have been obvious that, in FIG. 5, a vacuum source (e.g., vacuum pump 12) is connected to recovery container 104. "The stream of particles then impinges on the surface against which the aperture is positioned causing micro-abrasions **and is subsequently drawn into the recovery container** together with any abraded surface debris." EUNSUNG-1006, [0052]. While FIG. 5 does not label the tube connecting handle 102 to recovery container 104, it would have been obvious that this tube forms a "waste conduit" within the meaning of this claim.

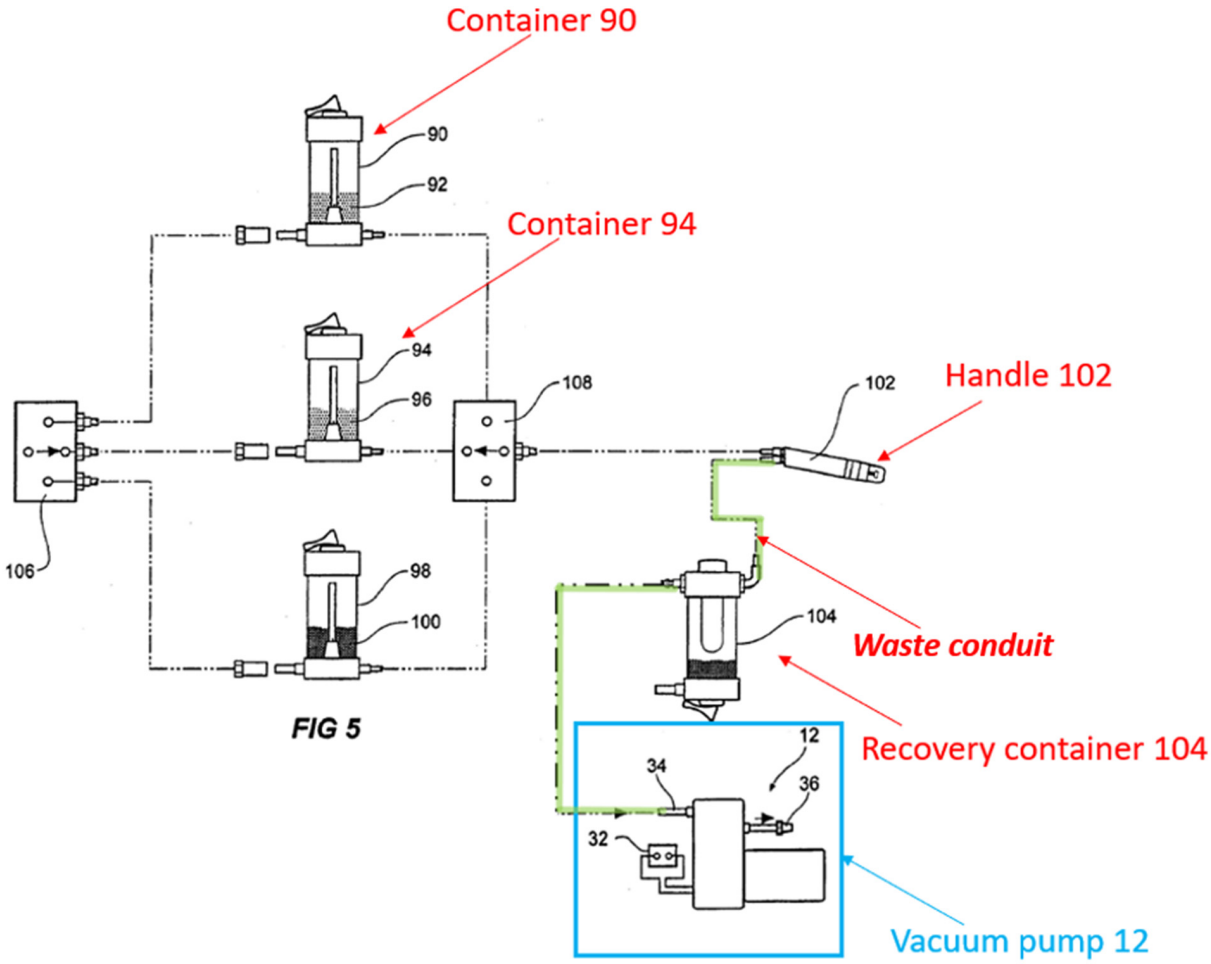

Modified FIG. 5 of Greenberg (annotated)

414. Thus, Greenberg discloses or renders it obvious that the handpiece (e.g., handle 102) is in fluid communication with the vacuum source (e.g., vacuum pump 12) and a waste container (e.g., recovery container 104) through a waste conduit when the handpiece and the waste container are connected to the console.

[23.3] wherein the system is configured to deliver a first treatment fluid contained in the first container and an additional treatment fluid contained in the at least one additional container to the handpiece sequentially or simultaneously when the first container and the at least one additional container are connected to the console.

415. It is my opinion that Greenberg renders obvious that the system is configured to deliver a first treatment fluid contained in the first container (e.g., container 90) and an additional treatment fluid contained in the at least one additional container (e.g., container 94) to the handpiece (e.g., handle 102) sequentially or simultaneously when the first container and the at least one additional container are connected to the console. See elements [1.1], [1.3], [1.6], and [1.8].

416. Alternatively, a POSITA would have found it obvious to configure Greenberg to achieve sequential or simultaneous delivery of treatment fluids from the first container and at least one additional container. For example, Trueba discloses: "… one or more of the bioactive agents from the reservoirs 54, 56 can be delivered from dispenser 30. The multiple bioactive agents may be administered sequentially or simultaneously." Trueba 11:21-24.

14. Claim 26

[26.pre] A system for treating skin, the system comprising:

417. It is my opinion that Greenberg renders obvious a system for treating skin. See element [1.pre].

[26.1] a console configured to receive a first container and at least one additional container;

418. It is my opinion that Greenberg renders obvious a console (e.g., apparatus 10) configured to receive a first container (e.g., container 90) and at least

one additional container (e.g., container 94). See elements [1.1] and [1.6].

[26.2] a handpiece configured to contact skin tissue of a subject; and

419. It is my opinion that Greenberg renders obvious a handpiece (e.g., handle 102) configured to contact skin tissue of a subject. See element [1.2].

[26.3] a block in the console, wherein the block is: configured to selectively receive fluid from the first container when the first container is connected to the console; configured to selectively receive fluid from the at least one additional container when the at least one additional container is connected to the console; and, configured to selectively be in fluid communication with the handpiece through a first conduit when the handpiece is connected to the console; and

420. It is my opinion that Greenberg renders obvious a block (e.g., valve 108 or a subpart of apparatus 10 that houses valve 108) in the console (e.g., apparatus 10), wherein the block is: configured to selectively receive fluid from the first container (e.g., container 90) when the first container is connected to the console; configured to selectively receive fluid from the at least one additional container (e.g., container 94) when the at least one additional container is connected to the console; and, configured to selectively be in fluid communication with the handpiece (e.g., handle 102) through a first conduit when the handpiece is connected to the console. See elements [1.1], [1.3], and [1.6].

[26.4] a vacuum source;

421. It is my opinion that Greenberg renders obvious a vacuum source (e.g., vacuum pump 12). See element [1.4].

[26.5] wherein the handpiece is configured to be in fluid communication with the vacuum source through a second conduit when the handpiece is connected to the

console;

422. It is my opinion that Greenberg renders obvious that the handpiece (e.g., handle 102) is configured to be in fluid communication with the vacuum source (e.g., vacuum pump 12) through a second conduit when the handpiece is connected to the console. See elements [1.1] and [1.5].

[26.6] wherein the at least one additional container comprises a second container and a third container such that the console is configured to receive at least three containers; and

423. It is my opinion that Greenberg renders obvious that the at least one additional container comprises a second container (e.g., container 94) and a third container (e.g., container 98) such that the console is configured to receive at least three containers (e.g., containers 90, 94, and 98). See element [2].

[26.7] wherein when the handpiece is connected to the console and the first container, the second container and the third container each contains fluid and is connected to the console, the system is configured to deliver to the handpiece one at a time fluid contained in the first container, fluid contained in the second container, and fluid contained in the third container.

424. It is my opinion that Greenberg renders obvious that when the handpiece (e.g., handle 102) is connected to the console (e.g., apparatus 10) and the first container (e.g., container 90), the second container (e.g., container 94) and the third container (e.g., container 98) each contains fluid and is connected to the console, the system is configured to deliver to the handpiece one at a time fluid contained in the first container, fluid contained in the second container, and fluid contained in the third container. See element [3].

15. Claim 28

[28.1] The system of claim 26, wherein the console comprises the vacuum source; and

425. It is my opinion that Greenberg renders obvious that the console (e.g., apparatus 10) comprises the vacuum source (e.g., vacuum pump 12). See element [1.4].

[28.2] wherein the handpiece is in fluid communication with the vacuum source and a waste container through the second conduit when the handpiece is connected to the console.

426. It is my opinion that Greenberg renders obvious that the handpiece (e.g., handle 102) is in fluid communication with the vacuum source (e.g., vacuum pump 12) and a waste container (e.g., recovery container 104) through the second conduit when the handpiece is connected to the console. See element [1.7].

16. Claim 29

[29] The system of claim 26, wherein the system is configured to deliver a first treatment fluid contained in the first container and an additional treatment fluid contained in the at least one additional container to the handpiece sequentially when the handpiece is connected to the console.

427. It is my opinion that Greenberg renders obvious that the system is configured to deliver a first treatment fluid contained in the first container (e.g., container 90) and an additional treatment fluid contained in the at least one additional container (e.g., container 94) to the handpiece sequentially when the handpiece (e.g., handle 102) is connected to the console (e.g., apparatus 10). See elements [1.1], [1.3], [1.6], [1.8], and [8].

17. Claim 34

[34] The system of claim 26, wherein the block is configured to control a flow of a first treatment fluid contained in the first container and an additional treatment fluid contained in the at least one additional container into the block with a valve when the first container and the at least one additional container are connected to the console.

428. It is my opinion that Greenberg renders obvious that the block (e.g., valve 108 or a subpart of apparatus 10 that houses valve 108) is configured to control a flow of a first treatment fluid contained in the first container (e.g., container 90) and an additional treatment fluid contained in the at least one additional container (e.g., container 94) into the block with a valve (e.g., valve 108) when the first container and the at least one additional container are connected to the console. See elements [1.1], [1.3], [1.6], [1.8], and [8].

18. Claim 35

[35] The system of claim 26, wherein the system is configured to control a flow of a first treatment fluid contained in the first container to the handpiece through the block when each of the first container and the handpiece is connected to the console.

429. It is my opinion that Greenberg renders obvious that the system is configured to control a flow of a first treatment fluid contained in the first container (e.g., container 90) to the handpiece (e.g., handle 102) through the block (e.g., valve 108 or a subpart of apparatus 10 that houses valve 108) when each of the first container and the handpiece is connected to the console. See element [9].

19. Claim 36

[36] The system of claim 35, wherein the system is configured to separately control a flow of a second treatment fluid contained in the at least one additional container to the handpiece through the block when each of the first container, the at least one additional container, and the handpiece are connected to the console.

430. It is my opinion that Greenberg renders obvious that the system is configured to separately control a flow of a second treatment fluid contained in the at least one additional container (e.g., container 94) to the handpiece (e.g., handle 102) through the block (e.g., valve 108 or a subpart of apparatus 10 that houses valve 108) when each of the first container, the at least one additional container, and the handpiece are connected to the console. See element [10].

20. Claim 37

[37.pre] A system for treating skin, the system comprising:

431. It is my opinion that Greenberg renders obvious that a system for treating skin. See element [1.pre].

[37.1] a console configured to receive a first container and at least one additional container;

432. It is my opinion that Greenberg renders obvious a console (e.g., apparatus 10) configured to receive a first container (e.g., container 90) and at least one additional container (e.g., container 94). See elements [1.1] and [1.6].

[37.2] a handpiece configured to contact skin tissue of a subject; and

433. It is my opinion that Greenberg renders obvious a handpiece (e.g., handle 102) configured to contact skin tissue of a subject. See element [1.2].

[37.3] a block in the console, wherein the block is: configured to selectively receive fluid from the first container when the first container is connected to the console; configured to selectively receive fluid from the at least one additional container when the at least one additional container is connected to the console; and, configured to selectively be in fluid communication with the handpiece through a first conduit when the handpiece is connected to the console; and

434. It is my opinion that Greenberg renders obvious a block (e.g., valve 108 or a subpart of apparatus 10 that houses valve 108) in the console (e.g., apparatus 10), wherein the block is: configured to selectively receive fluid from the first container (e.g., container 90) when the first container is connected to the console; configured to selectively receive fluid from the at least one additional container (e.g., container 94) when the at least one additional container is connected to the console; and, configured to selectively be in fluid communication with the handpiece (e.g., handle 102) through a first conduit when the handpiece is connected to the console. See elements [1.3] and [1.6].

[37.4] a vacuum source;

435. It is my opinion that Greenberg renders obvious a vacuum source (e.g., vacuum pump 12). See element [1.4].

[37.5] wherein the handpiece is configured to be in fluid communication with the vacuum source through a second conduit when the handpiece is connected to the console;

436. It is my opinion that Greenberg renders obvious that the handpiece (e.g., handle 102) is configured to be in fluid communication with the vacuum source (e.g., vacuum pump 12) through a second conduit when the handpiece is

connected to the console. See element [1.5].

[37.6] wherein the system is configured to control a flow of a first treatment fluid contained in the first container to the handpiece through the block when each of the first container and the handpiece is connected to the console; and

437. It is my opinion that Greenberg renders obvious that the system is configured to control a flow of a first treatment fluid contained in the first container (e.g., container 90) to the handpiece (e.g., handle 102) through the block (e.g., valve 108 or a subpart of apparatus 10 that houses valve 108) when each of the first container and the handpiece is connected to the console. See element [9].

[37.7] wherein the system is configured to separately control a flow of a second treatment fluid contained in the at least one additional container to the handpiece through the block when each of the first container, the at least one additional container, and the handpiece are connected to the console.

438. It is my opinion that Greenberg renders obvious that the system is configured to separately control a flow of a second treatment fluid contained in the at least one additional container (e.g., container 94) to the handpiece (e.g., handle 102) through the block (e.g., valve 108 or a subpart of apparatus 10 that houses valve 108) when each of the first container, the at least one additional container, and the handpiece are connected to the console. See element [10].

21. Claim 39

[39.1] The system of claim 37, wherein the console comprises the vacuum source; and

439. It is my opinion that Greenberg renders obvious that the console (e.g., apparatus 10) comprises the vacuum source (e.g., vacuum pump 12). See element

[1.4].

[39.2] wherein the handpiece is in fluid communication with the vacuum source and a waste container through the second conduit when the handpiece is connected to the console.

440. It is my opinion that Greenberg renders obvious that the handpiece (e.g., handle 102) is in fluid communication with the vacuum source (e.g., vacuum pump 12) and a waste container (e.g., recovery container 104) through the second conduit when the handpiece is connected to the console. See elements [1.5]-[1.7], [28.2].

22. Claim 40

[40] The system of claim 37, wherein the system is configured to deliver the first treatment fluid contained in the first container and the second treatment fluid contained in the at least one additional container to the handpiece sequentially when the handpiece is connected to the console.

441. It is my opinion that Greenberg renders obvious that the system is configured to deliver the first treatment fluid contained in the first container (e.g., container 90) and the second treatment fluid contained in the at least one additional container (e.g., container 94) to the handpiece sequentially when the handpiece (e.g., handle 102) is connected to the console. See elements [1.1], [1.3], [1.5]-[1.6], [1.8], and [8].

23. Claim 45

[45] The system of claim 37, wherein the block is configured to control the flow of the first treatment fluid contained in the first container and the second treatment fluid contained in the at least one additional container into the block with a valve when the first container and the at least one additional container

are connected to the console.

442. It is my opinion that Greenberg renders obvious that the block (e.g., valve 108 or a subpart of apparatus 10 that houses valve 108) is configured to control the flow of the first treatment fluid contained in the first container (e.g., container 90) and the second treatment fluid contained in the at least one additional container (e.g., container 94) into the block with a valve (e.g., valve 108) when the first container and the at least one additional container are connected to the console. See elements [1.1], [1.3], [1.6], [1.8], [8], [23.3], and [34].

XIV. [GROUND 2B] – Greenberg And Trueba

1. The Greenberg-Trueba Combination

443. In the Greenberg-Trueba combination, Greenberg's system would have been modified based on Trueba's teachings of computer control and display. For example, in the resulting system, Greenberg's valve 106 and/or valve 108 are further controlled by a computer (e.g., Trueba's controller 100), which is controlled by an user input (e.g., Trueba's touch screen 105), to control the flow of treatment solutions from containers (e.g., Greenberg's containers 90, 94, and 98), so that a user can use the user input device to select a flow of fluids from the containers. The combined device also includes a display (e.g., Trueba's touch screen 105) that indicates which solution is being delivered.

444. A POSITA would have been motivated to modify Greenberg's device by including Trueba's computer control and display for various benefits, such as

added precision, automation, and clarity. For example, by using Trueba's controller to control the order of different treatment materials (and displaying on the touch screen the material being administered), Karasiuk-Palmer-Trueba reduces the chance to apply things in a wrong order. In fact, the same reasons that would have motivated the Karasiuk-Palmer-Trueba combination (Ground 1B) would similarly apply for the Greenberg-Trueba combination.

445. A POSITA would have had a reasonable expectation of success in implementing the combination given the technical similarities between Greenberg and Trueba. For example, similar to Greenberg, Trueba also discloses a system "for topical application of a bioactive composition to the surface of the subject, such as a patch of skin" EUNSUNG-1008, 3:22-27. Similar to Greenberg, Trueba also discloses a system that can select from different treatment materials from different containers. EUNSUNG-1008, 3:4-8, 5:14-26, 11:4-34, FIG. 3.

446. In addition, Trueba allows programming its system to deliver different treatment materials at different times to allow automated delivery following complex administration protocols. EUNSUNG-1008, 3:34-38, 4:65-5:17, 6:1-9, 6:27-7:9, 10:52-11:49, FIG. 1. In addition to added automation and precision, Trueba's techniques also are beneficial because "[c]omputerized control of medication dosing, which may be programmed by medical personnel for subsequent automated delivery, can help avoid toxic drug interactions, overdoses,

and death." EUNSUNG-1008, 6:1-9. For example, Trueba's system can be "programmed to prevent unauthorized alteration of dosages, for example an increase in a dosage of a controlled substance above that authorized by the prescribing physician." EUNSUNG-1008, 12:2-5.

447. In addition, Trueba discloses sequential or simultaneous delivery of treatment fluids from the first container and at least one additional container: "… one or more of the bioactive agents from the reservoirs 54, 56 can be delivered from dispenser 30. The multiple bioactive agents may be administered sequentially or simultaneously." Trueba 11:21-24

448. By the Critical Date, computer (e.g., PLC) controlled fluid delivery systems were well-known. EUNSUNG-1007, FIG. 3; EUNSUNG-1008, FIG. 3; EUNSUNG-1015, Abstract. Comparing to manually controlled systems, computer controlled systems provide added precision and automation (e.g., automated delivery of a first treatment for a fixed time followed by a second treatment for a fixed time). EUNSUNG-1008, 11:4-34. Touch screen 105 "may include a series of images that, when touched with a finger or stylus, program the controller 100," (EUNSUNG-1008, 11:50-59, FIG. 3) and can be used to "indicate which selections have been made" and to display "information such as desired dosages, frequency, and potential side effects." EUNSUNG-1008, 11:42-49, FIG. 3; EUNSUNG-1014, Abstract, 1. Further, the touch screen can be operated to select a particular drug or

dosage, or to program the controller. EUNSUNG-1008, 11:60-12:8.

449. A POSITA would have been motivated to modify the Greenberg's device by including Trueba's computer control and display to provide added precision, automation, and clarity. A POSITA would have implemented the display and computer control with a reasonable expectation of success because this would constitute the use of a known technique to improve similar devices in the same way. In fact, the modification requires nothing more than automating the manual process in Greenberg with well-known automation techniques. For example, Duchon discloses: "computer 100 controls valve motor 130 through motor driver 132, and monitors position through a Position Monitor feedback signal from potentiometer 134." EUNSUNG-1010, [0098]. As another example, Greenberg discloses: "Switch 30 controls a solenoid that switches the vacuum pump from operatively being connected either to the first or second assembly." EUNSUNG-1006, [0050]. As another example, Armstrong discloses "the rotary selector valve 74 can be provided with a pulse activated solenoid driven stepping mechanism (not shown) such that the activation of a selector switch (not shown) on the handpiece advances the valve in a step-by-step manner to valve the desired fluid on a one step per pulse basis." EUNSUNG-1011, 7:15-20. Thus, in the Greenberg-Trueba combination, a POSITA would have been motivated to implement Trueba's computer control in various ways including by controlling

Greenberg's valve 106 and valve 108 using a stepper motor or a solenoid.

450. As another example, Wunsch discloses an apparatus (e.g., console 10) for sequentially dispensing a plurality of solutions through a manifold (e.g., manifold selector 17) that is connected to each of the solutions to be administered. EUNSUNG-1020, Abstract, 7:39-56, 8:17-26, FIGS. 1-4. As shown in FIG. 1, the manifold selector 17 includes a plurality of valves 40, which control the flow of solution from the plurality of bottles 15. EUNSUNG-1020, 6:18-48, 7:16-56. In operation, the user can program the sequencer timer 13 to automatically operate the valves 40 to achieve automatic switching between different solutions and sequential delivery of different solutions. EUNSUNG-1020, 9:36-10:64. The valves 40 can be individually controlled by either reversible electric motors 48 or solenoids 59. EUNSUNG-1020, 6:18-26.

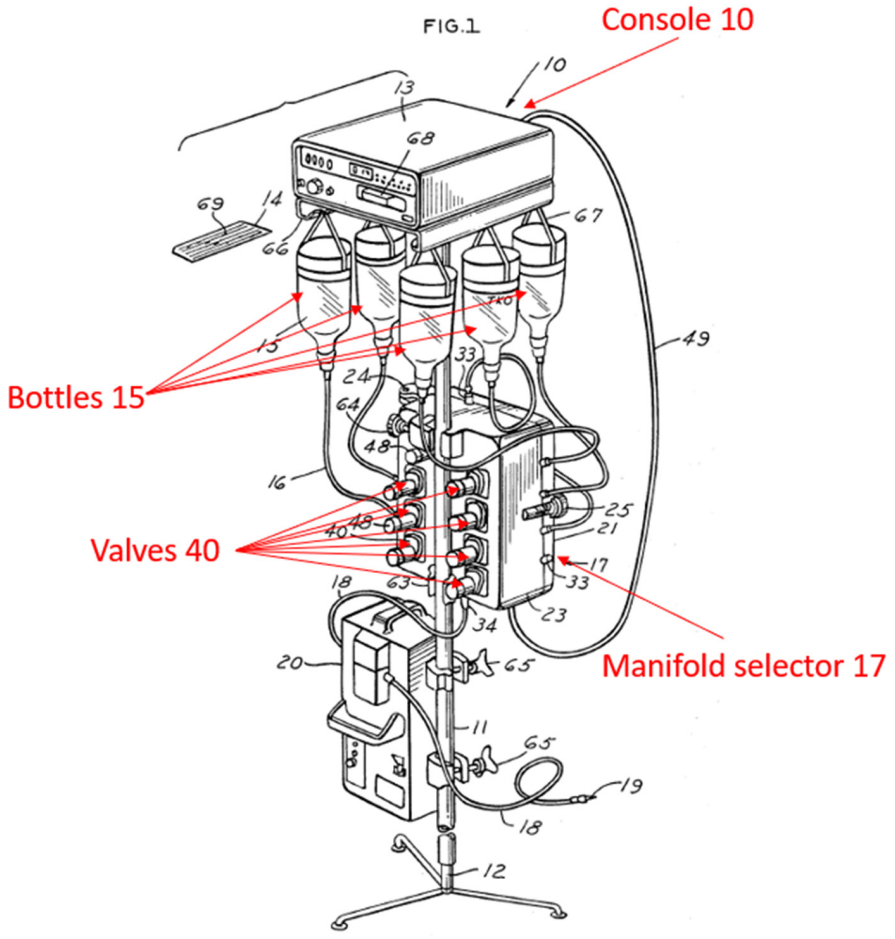

Wunsch, FIG. 1 (annotated)

451. In the Greenberg-Trueba combination, valve 106 and valve 108 are further controlled by a computer (e.g., Trueba's controller 100), which is controlled by an user input (e.g., Trueba's touch screen 105), to control the flow of treatment solutions from containers (e.g., containers 90, 94, and 98). The combined device also includes a display (e.g., Trueba's touch screen 105) that indicates which solution is being delivered.

1. Claim 1 and its Dependent Claims

[1.8] the system is configured to deliver the first treatment fluid contained in the first container and the additional treatment fluid contained in the at least one additional container to the handpiece sequentially.

452. As discussed in Section XIII, Greenberg-Trueba renders obvious claim 1 for the same reasons discussed regarding Greenberg.

453. Greenberg-Trueba further renders obvious [1.8] based on Trueba's teachings. In particular, to the extent that the term "sequentially" is interpreted to require automatic switching between first and second treatment fluids, Karasiuk-Palmer-Trueba renders this limitation obvious. EUNSUNG-1008, 3:4-8, 5:18-6:9, 6:10-16, 11:4-34, 12:2-9.

454. It is my opinion that a POSITA would have understood that the term "sequentially" only requires that a first treatment fluid and a second treatment fluid be delivered one after another, as opposed to "simultaneously," and does not require automatic switching between treatment fluids. However, to the extent that this term is interpreted to require automatic switching between treatment fluids, this feature is obvious in view of knowledge of the POSITA. For example, Trueba discloses "[c]omputerized control of medication dosing, **which may be programmed by medical personnel for subsequent automated delivery**, can help avoid toxic drug interactions, overdoses, and deaths." EUNSUNG-1008, 6:6-9. Trueba discloses: "Multiple compositions can be dispensed simultaneously or sequentially." EUNSUNG-1008, 11:4-5. For example, corticosteroid from

reservoir 52 would be administered to a subject having stable reactive airway disease, but if symptoms persist, then the β-agonist from reservoir 50 also can be delivered (for example, in response to pressing an activation button **or programming the applicator**)." EUNSUNG-1008, 11:15-20. Trueba explains "[c]omputerized control of medication dosing, **which may be programmed by medical personnel for subsequent automated delivery**, can help avoid toxic drug interactions, overdoses, and deaths." EUNSUNG-1008, 6:6-9. If the '287 patent requires the device to be capable of delivering treatment fluids from two or more fluid containers either sequentially or simultaneously, Trueba allows this functionality: "… one or more of the bioactive agents from the reservoirs 54, 56 can be delivered from dispenser 30. The multiple bioactive agents may be **administered sequentially or simultaneously**." Trueba 11:21-24. As another example, Wunsch discloses that the user can program the sequencer timer 13 to automatically operate the valves 40 to achieve automatic switching between different solutions and sequential delivery of different solutions. EUNSUNG-1020, 9:36-10:64.

455. Using Trueba's computer control, multiple compositions can be automatically dispensed simultaneously or sequentially. EUNSUNG-1008, 3:4-8, 5:18-6:9 ("Several modules may contain the same or different bioactive compositions"), 6:10-16 ("may be used to apply the agent to an area of skin for

topical application of a bioactive composition"), 11:4-34 ("Multiple compositions can be dispensed simultaneously or sequentially"). Further, the device can be programmed to respond to changing clinical circumstances. EUNSUNG-1008, 11:15-20 ("For example, only the corticosteroid from reservoir 52 would be administered to a subject having stable reactive airway disease. However, if symptoms persist, then the β-agonist from reservoir 50 also can be delivered."). Further, the device can be programmed to "prevent unauthorized alteration of dosages" and "permit certain ranges of dosages to be administered." EUNSUNG-1008, 12:2-9.

456. As discussed above in Section XIV.1, Greenberg-Trueba's system employs "[c]omputerized control of medication dosing, which may be programmed by medical personnel for subsequent automated delivery," as taught by Trueba. EUNSUNG-1008, 6:6-9. A POSITA would have found it obvious to employ Trueba's automation in the system of Greenberg provide added precision (avoiding human error), automation, and clarity, resulting in automatic switching and delivery of treatment fluids in a sequential manner.

457. As discussed above in Section XIV.1, in the Greenberg-Trueba combination, Trueba's controller 100 is configured to control the delivery of fluids to provide added precision, automation, and clarity. Thus, the Greenberg-Trueba combination renders this limitation obvious. Similarly, dependent claims 2-10 that

inherit the same subject matter are rendered obvious by Karasiuk-Palmer-Trueba.

2. Claims 12, 22, 23, 29, 40 and their Dependent Claims

458. As discussed in XIII (Ground 2A), Greenberg-Trueba renders obvious claims 12, 22, 23, 29, and 40 for the same reasons as discussed regarding Greenberg. Greenberg-Trueba further renders obvious [12], [22.6], [23.3], [29] and [40] based on Trueba's teachings. In particular, as discussed above regarding [1.8], to the extent that the term "sequentially" is interpreted to require automatic switching between first and second treatment fluids, Karasiuk-Palmer-Trueba renders such a limitation obvious. EUNSUNG-1008, 3:4-8, 5:18-6:9, 6:10-16, 11:4-34, 12:2-9. Similarly, dependent claims 24-25 that inherit the same subject matter are rendered obvious by Karasiuk-Palmer-Trueba.

3. Claims 3, 26 and their Dependent Claims

459. As discussed in XIII (Ground 2A), Greenberg-Trueba renders obvious claims 3 and 26 for the same reasons as discussed regarding Greenberg. Greenberg-Trueba further renders obvious [3] and [26.7] based on Trueba's teachings. In particular, as discussed above regarding [1.8], to the extent that the term "one at a time" is interpreted to require automatic switching between first and second treatment fluids, Greenberg-Trueba renders such a limitation obvious. EUNSUNG-1008, 3:4-8, 5:18-6:9, 6:10-16, 11:4-34, 12:2-9. Similarly, dependent claims 28-36 that inherit the same subject matter are rendered obvious by

Karasiuk-Palmer-Trueba.

4. Claim 4

[4] The system of claim 1, further comprising a computing device configured to control at least one function of the system.

460. It is my opinion that Greenberg renders obvious a computing device (e.g., Trueba's controller 100) configured to control at least one function (e.g., delivery of fluids) of the system. As discussed above in Section XIV.1, in the Greenberg-Trueba combination, the system comprises a computing device (e.g., Trueba controller 100) configured to control at least one function (e.g., delivery of fluids) of the system. EUNSUNG-1008, 3:34-38, 4:65-5:17, 6:1-9, 6:27-7:9, 10:52-11:49, 12:2-5, FIG. 1.

5. Claim 5

[5] The system of claim 4, further comprising a user input device to select a flow of fluids from the first container and the at least one additional container to the handpiece.

461. It is my opinion that Greenberg renders obvious a user input device (e.g., Trueba's touch screen 105) to select a flow of fluids from the first container (e.g., Greenberg's container 90) and the at least one additional container (e.g., Greenberg's container 94) to the handpiece (e.g., Greenberg's handle 102). As discussed above in Section XIV.1, in the Greenberg-Trueba combination, the system comprises a user input device (e.g., Trueba's touch screen 105) to select a flow of fluids from the first container and the at least one additional container to

the handpiece. EUNSUNG-1008, 11:42-12:8, FIG. 3.

6. Claim 6

[6] The system of claim 5, wherein the user input device comprises a touch screen.

462. It is my opinion that Greenberg renders obvious that the user input device (e.g., Trueba's touch screen 105) comprises a touch screen. As discussed above in Section XIV.1, in the Greenberg-Trueba combination, the system comprises a touch screen (e.g., Trueba's touch screen 105) to select a flow of fluids from the first container and the at least one additional container to the handpiece.

7. Claim 7

[7] The system of claim 6, further comprising a display.

463. It is my opinion that Greenberg renders obvious a display (e.g., Trueba's touch screen 105). As discussed above in Section XIV.1, in the Greenberg-Trueba combination, the system comprises a display (e.g., Trueba's display screen or touch screen 105) that indicates which solution is being delivered. EUNSUNG-1008, 11:40-12:8, FIG. 3.

464. In the event claim 7 is construed to require an additional display separate from the touch screen, Trueba also discloses coupling an external computer 115 to controller 100. EUNSUNG-1008, 12:9-36, FIG. 3. A POSITA would have found it obvious that this external computer 115 would include an additional display separate from Trueba's touch screen 105.

8. Claim 17

[17] The skin treatment apparatus of claim 11, further comprising a computing device configured to control at least one function of the skin treatment apparatus.

465. It is my opinion that Greenberg renders obvious a computing device (e.g., Trueba's controller 100) configured to control at least one function (e.g., delivery of fluids) of the skin treatment apparatus. See element [4].

9. Claim 18

[18] The skin treatment apparatus of claim 17, further comprising a user input device to facilitate control of a flow of treatment materials from at least one of the first container and the second container to the handpiece assembly.

466. It is my opinion that Greenberg renders obvious a user input device (e.g., Trueba's touch screen 105) to facilitate control of a flow of treatment materials from at least one of the first container (e.g., Greenberg's container 90) and the second container (e.g., Greenberg's container 94) to the handpiece assembly (e.g., Greenberg's handle 102). See element [5].

10. Claim 19

[19] The skin treatment apparatus of claim 18, wherein the user input device comprises a touch screen.

467. It is my opinion that Greenberg renders obvious that the user input device (e.g., Trueba's touch screen 105) comprises a touch screen. See element [6].

11. Claim 20

[20] The skin treatment apparatus of claim 19, further comprising a display.

468. It is my opinion that Greenberg renders obvious a display (e.g.,

Trueba's touch screen 105). See element [7].

12. Claim 24

[24] The system of claim 22, further comprising a computing device configured to control at least one function of the system.

469. It is my opinion that Greenberg renders obvious a computing device (e.g., Trueba's controller 100) configured to control at least one function (e.g., delivery of fluids) of the system. See element [4].

13. Claim 25

[25] The system of claim 24, further comprising a user input device to facilitate control of a flow of fluids from the first container and the at least one additional container to the handpiece.

470. It is my opinion that Greenberg renders obvious a user input device (e.g., Trueba's touch screen 105) to facilitate control of a flow of fluids from the first container (e.g., Greenberg's container 90) and the at least one additional container (e.g., Greenberg's container 94) to the handpiece (e.g., Greenberg's handle 102). See element [5].

14. Claim 30

[30] The system of claim 26, further comprising a computing device configured to control at least one function of the system.

471. It is my opinion that Greenberg renders obvious a computing device (e.g., Trueba's controller 100) configured to control at least one function (e.g., delivery of fluids) of the system. See element [4].

15. Claim 31

[31] The system of claim 30, further comprising a user input device to select a flow of fluids from the first container and the at least one additional container to the handpiece.

472. It is my opinion that Greenberg renders obvious a user input device (e.g., Trueba's touch screen 105) to select a flow of fluids from the first container (e.g., Greenberg's container 90) and the at least one additional container (e.g., Greenberg's container 94) to the handpiece (e.g., Greenberg's handle 102). See element [5].

16. Claim 32

[32] The system of claim 31, wherein the user input device comprises a touch screen.

473. It is my opinion that Greenberg renders obvious that the user input device (e.g., Trueba's touch screen 105) comprises a touch screen. See element [6].

17. Claim 33

[33] The system of claim 32, further comprising a display.

474. It is my opinion that Greenberg renders obvious a display (e.g., Trueba's touch screen 105). See element [7].

18. Claim 41

[41] The system of claim 37, further comprising a computing device configured to control at least one function of the system.

475. It is my opinion that Greenberg renders obvious a computing device (e.g., Trueba's controller 100) configured to control at least one function (e.g., delivery of fluids) of the system. See element [4].

19. Claim 42

[42] The system of claim 41, further comprising a user input device to select a flow of fluids from the first container and the at least one additional container to the handpiece.

476. It is my opinion that Greenberg renders obvious a user input device (e.g., Trueba's touch screen 105) to select a flow of fluids from the first container (e.g., Greenberg's container 90) and the at least one additional container (e.g., Greenberg's container 94) to the handpiece (e.g., Greenberg's handle 102). See element [5].

20. Claim 43

[43] The system of claim 42, wherein the user input device comprises a touch screen.

477. It is my opinion that Greenberg renders obvious that the user input device (e.g., Trueba's touch screen 105) comprises a touch screen. See element [6].

21. Claim 44

[44] The system of claim 43, further comprising a display.

478. It is my opinion that Greenberg renders obvious a display (e.g., Trueba's touch screen 105). See element [7].

XV. CONCLUSION

479. In conclusion, I find the claims of the '287 patent addressed herein to be rendered obvious in their entirety, based upon the prior art combinations of Karasiuk-Palmer; Karasiuk-Palmer-Trueba; Greenberg; and Greenberg-Trueba, and the supporting prior art of these combinations.

480. The findings and opinions set forth in this declaration are based on my work and examinations to date.

481. I may continue my examinations. I may also receive additional documentation and other factual evidence over the course of this IPR that will allow me to supplement and/or refine my opinions. I reserve the right to add to, alter, or delete my opinions and my declaration upon discovery of any additional information. I reserve the right to make such changes as may be deemed necessary.

482. In signing this declaration, I recognize that the declaration will be filed as evidence in an IPR before the PTAB. I also recognize that I may be subject to cross-examination in the case and that cross-examination will take place within the United States. If cross-examination is required of me, I will appear for cross-examination within the United States during the time allotted for cross-examination.

483. I hereby declare that all statements made herein of my own knowledge are true and that all statements made on information and belief are believed to be true; and further that these statements were made with the knowledge that willful false statements and the like are punishable by fine or imprisonment, or both, under Section 1001 of Title 18 of the United States Code.

Dated: September 30, 2024

By:
Eric Simon
Salt Lake City, Utah

Appendix A

Curriculum Vitae of

ERIC MICHAEL SIMON

6629 E Emigration Canyon Road
Salt Lake City, Utah 84108 - 1788 USA
cell / office 801.541.9000 - email info@dexteritydesign.com
linkedin.com/in/ericmsimon1 | researchgate.net/profile/Eric_Simon
facebook.com/dexterityproductdesign
website esimonconsulting.com

Career Highlights

- Founder and Principal – President / Design Engineer – Dexterity Design: Product design and engineering services, prototyping, testing, pre-production services
- Founder and Chief Technologist – Acme Biosystems; R&D, production, and marketing of systems for 3-dimensional, high density, long-term culture of mammalian cells
- SwiftKey™ fastener – successfully conceived, prototyped, patented, marketed, and licensed product, currently licensed to MicroPlastics Inc.
- Co-Manager—Miniature Implantable Drug Delivery Systems Project (funded by Merck): Two patents issued; responsible for technical development, personnel management, budgeting, scheduling, reporting
- National Institute of Health SBIR Grant Principle Investigator—Fibrous Substrates for Cell Culture: First known use of polymeric electro-spun cell substrates and prelude to 3D scaffold culture
- Twenty-two patents issued & pending, including 4 pro se utility patents
- Numerous products designed, produced, and marketed

Experience

DESIGN ENGINEER / CONSULTANT — 1995 to Present

Dexterity Design, Salt Lake City, Utah

- Product design and prototyping, engineering, testing and failure analysis, bridge to manufacturing
- Project management, market and patent research, expert witness services
- Focus on medical device, biotechnical, consumer, and recreational product sectors
- Recent and Current Projects:
  - Portable hand-held ventilator
  - Automated cell processing instrument with magnetic bead separation
  - DVT ultrasonic ablation system
  - Syringe aspiration accessory

- Prior Work: **Biosensors**: Nanopore proteomics, SPR proteomics, PCR rapid pathogen, TIRF Fluorescence; **Orthopedics**: Targetable needle-over-needle stem cell delivery (vertebral disc), ALIF Cage (vertebral fixation),Ti6 toe fixation implant and driver; **Dermatology**: Forced-air headlice treatment, LED- and Laser-based phototherapy, Micro-dermabrasion, Cellulite reduction; **Opthalmic**: Topographic surface measurement for LASIK, Ophthalmic iontophoretic drug delivery; **Vascular**: Subclavian catheter sealing system; Bevel-tip cardiac catheter; Cardiac catheter incision closure, Venous blood pressure transducer; **Misc Med & Biotech**: Portable handheld ventilator, PCR hybridization automated wash, Ultrasonic probe, misc device enclosures, misc dental devices; **Non-Medical**: Ruggedized portable data-clock, Snowflake metrical instrument, Modular event canopy, Biometric time clock, Sport bottle, Modular crowd-control barrier, Drug-delivery port fluidic connector, Tool-less irrigation couplings, Modular climbing wall, Water-filled barriers, Pet toys, Sunglasses & ski goggles, Sport gloves.

Experience (continued)

SR. SYSTEMS ENGINEER / MICROFLUIDICS SPECIALIST — 2018 to 2020
Carterra, Inc., Salt Lake City, Utah

- Systems engineering, project management, constraint and risk analysis
- Design and implementation of milli- and micro-fluidic systems
- Design and implementation of proteomic biosensor instruments

FOUNDER / PRESIDENT / CHIEF TECHNOLOGIST — 2005 to Present
Acme Biosystems, Salt Lake City, Utah

- Invention and development of advanced gas-permeable cell culture systems
- Project management, market research, patent prosecution
- Management and strategic planning

Prior Experience

PROJECT ENGINEER / BIOMATERIALS SPECIALIST
Center for Engineering Design, Salt Lake City, Utah | Drug Delivery Devices, Cell Culture Systems, Micro Electromechanical Systems (MEMS), Abdominal Implants, Material and Design Consultation, Robotics, Technical and Grant Writing, Project Management

BIOMATERIALS / DEVELOPMENT ENGINEER
SynCardia Systems / Symbion Inc., Salt Lake City, Utah | Artificial Heart Devices and Instrumentation

ZAMBONI OPERATOR
Sun Valley Ice Center, Sun Valley, Idaho | Ice Sheet Maintenance and Refrigeration Systems

MANUFACTURING ENGINEER
American Medical Optics, Irvine, California | Intraocular and Contact Lenses

Education

Master of Engineering, Bioengineering, Biomaterials & Product Design, University of Utah
Bachelor of Science, Materials Science & Engineering, Biomaterials/Fabrication University of Utah
Mechanical Engineering / Premedicine, University of Michigan

Legal Experience

(detailed history available upon request)

Expert Witness - 13 cases total
Patent Infringement / Invalidation / Breach of Confidentiality - 4 cases
Personal Injury / Medical Malpractice - 9 cases

- Invalidation of phototherapy device patent via IPR
- Infringement of gas-permeable cell culture device patents (litigation and IPR)
- Invalidation of blood separation device patent
- Infringement of specialty toothbrush and invalidation of patent
- Failure of eyeglass frame resulting in permanent eye damage to consumer
- Failure of embolic microspheres resulting in patient blindness and brain damage
- Failure of heparin infusion pump resulting in patient death
- Failure of implantable penile prosthesis (unrelated to prior case)
- Failure of conventional hip implant
- Failure of night light and subsequent hand injury
- Failure of custom implantable hip prosthesis
- Entanglement of hand in rotor assembly of vacuum blower
- Failure of implantable penile prosthesis

Professional Skills

Project Management	Mechanical & Product Design	Surface Characterization
Systems Engineering	Prototyping / 3D Printing	Materials Selection
Budgeting & Scheduling	CAD/CAE - SolidWorks	Surface Modification
Patent Review & Analysis	Design Review	Molding & Fabrication
Proposal Preparation	Product Styling & Ergonomics	Manufacturing Analysis
Legal Expert Witness	New Product Analysis	Failure Modes Analysis
Market Review & Analysis	KOL Interaction	Risk Analysis

Product Scope	Drug Delivery Systems	Cardiovascular Devices	Ophthalmic Devices
	Fluidics and Microfluidics	Biosensors	Stem Cell Devices
	Cell Culture Products	Disposable Medical Products	Performance Apparel
	Percutaneous Access Devices	Dental Products	Micro Mechanisms/Sensors
	In Vitro Diagnostic Systems	Soft Goods	Device Enclosures/Housings
	Laboratory Products & Instruments	Sport Optics	Catheter-Based Devices
	Needle-based devices	Mounting Systems/Platforms	Instrument Subsystems
	Biomaterials Selection/Analysis	Recreational Products	Consumer Healthcare Products

Patents

Syringe Aspiration Accessory Device and Methods of Use (patent pending, US & EU Nat'l Phase)
Cell Culture Apparatus and Associated Methods (8,486,692; pro se prosecution)
Airflow Applicators and Related Treatment Methods (8,475,510)
Container and Lid (US design patent pending)
Airflow Attachment (D62687)
Time Clock (D622168)
Interlocking Barriers (7,275,888)
Interlocking Barrier (D552,250)
Detachable Clasping Fastener (6,243,922; pro se prosecution)
Control Barrier with Rotatable Legs (6,676,113)
Reusable Fluid Pressure Transducer Monitoring Apparatus (6,635,020)
Method and System for Performing Microdermabrasion and Suction Massage (6,926,681)
Method and System for Performing Microdermabrasion (6,582,442)
Dermabrasion Handpiece (D451,196); Dermabrasion System (D450,842)
Lens and Associatable Flow Cell (6,108,463 & 6,356,676 & 6,611,634; EP0928416;)
Interlocking Control Barrier Systems (6,086,285)
Waveguide Lens (D426,783)
Teeth Cleaning Implement with Integrated Fluid Dispenser (5,642,994)
Implantable Drug Delivery System with Piston Actuation (5,196,002 & 5,059,175)
Multiple Vesicle Implantable Drug Delivery System (5,167,625)
Disposable Toothbrush Cover (5,139,142; pro se prosecution)

Technical Reports

History of Aspiration Devices and Centrifugation Vessels
History and Physics of Gas-Permeable Cell Cultureware
Technical Brief: CELLUXE Gas-Permeable Cell Culture System
Analysis of Metal Sintering System for Ti Toe Fixation Impants
Thermal Block Production Methods for the Olympia PCR Instrument
Site-Rite Clinical Evaluation Report
Product Design Assessment: Defective Reading Glasses
Findings: Pingle v. BioSphere Medical, Inc.
Effects of a Magnetic Fluid Mixture on Cells Cultured in ACCS
Ergonomic Analysis of Site-Rite Ultrasound Probe
Failure of Implantable Penile Prosthesis
Sealing System for a Long-Term Dialysis Catheter
Tipping Analysis of Water-Filled Barrier
Ophthalmic Electrode Materials Search
Search Report: Tube and Pipe Fittings
Manufacturing Feasibility for Production of Orlock™ Tubing
Design Specification: Passive Cartridge v1.1
Apollo™ Flashtube Chassis Design Verification

Tech Reports (continued)

Prophyeze™ DDPA Pros & Cons
Optimization of Waveguide Signal-To-Noise Ratio
Implant Testing of Butyrate Sheet Subjects to Static Cling Vinyl Labels
Incompatibility of Static Cling Vinyl Labels with Ski Goggle Lenses
Brittle Failure of Cellulose Propionate Sheet
Surgical Microscope Shield—Concept Design & Materials
Plastics Recommendations for Modular Cellular Telephone
Discussion of Goggle Spacer-Foam Adhesion Failure
L.L. Bean Lens Abrasion—Results of Optical and Physical Analysis
Sunglass Frame Materials—Comparison of Properties
Alternative Plastic Materials for High Performance Sunglass Frames
Analysis and Performance Testing of the Snap Fit Assembly of a Night Light
Materials Recommendations for Adjustable Ski Pole Clamp
Sunglass Frame Redesign—Fortified Lens Groove
Sunglass Lens Failure—Hardcoat Delamination
Goggle Face-Foam Adhesion—Interim Report
Coating Durability of Plastic Sunglass Lenses—QA Specification
Rutherford Backscattering Analysis of Mirror Lens Coatings
Summary of Findings—Baxter v. Cincinnati Fan
Injection Molding, Embrittlement, and ESC of Sunglass Frames
Materials for Encapsulation of Transcutaneous Energy Transmission System
Polycarbonate Thermal Lens Fogging
Process Control for Thermoformed Lens Production
Crazing of L.L. Bean Sunglass Lenses
Environmental Stress Crack Failure of Ventilator Cartridge Tubing Connector
Redesign of Ventilator Cartridge and Coupline
Miniature Implantable Drug Delivery System—Phase II Final Report
Historical and Technical Review of Drug Delivery Systems
NIH SBIR Phase I Final Report: Fibrous Substrates for Cell Culture
A Review of the FLEX Series Displacement Sensors
Electret Materials: Preparation By Corona Discharge and Electron Bombardment
Preparation of Teflon Fibers for Electret Materials
Electrostatic Spinning of Solution Polymers: Design and Surface Characterization
Surface and Bulk analysis of Biomer® Polyurethane in Explanted Artificial Hearts
Review of Surface Passivation Technologies for Blood-Contact Materials
Polish Formulation and Finishing Methodology for IOL and Contact Lens Production
Review of IOL Haptic Design

Proposals

Development of a Novel Bone Marrow Fractionation and Isolation Device
Development and Testing of High Performance Plate-Based Cultureware, NIH SBIR
Reliable Central-Nervous-System Interfaces, DARPA
Medical Diagnosis Platform for Category A and B Toxins and Inhalation Bacteria
Rapid Diagnostics Platform for Category A and B Toxins and Inhalation Bacteria
Investigation of the Effects of a Magnetic Fluid Mixture on Mammalian Cells
Advanced System for Routine Primary Hepatocyte Culture, NSF SBIR
Proposal for Design and Dev't of an Anesthesia Rebreathing Absorber Module
Ophthalmic Electrode Materials
Development and IP Review of a Micro-Dermabrasion System

Proposals (continued)

Intermediate Waveguide: Overview and Development Budget
Design and Prototype of a Custom Photo Station for AMS
Design and Prototype of an Aesthetic Massage System
RFQ: Multibarrier 1B Finite Element Analysis
Test Fixtures for Fluorescence Immuno-Diagnostic System
Plastic Enclosure for the Genesis-2000 Dental Laser System
Disposable Dental Articulator
Electrical Connection System for pH Enteral Feeding Catheter
Dental Implant Surgical Guide
Double-Blade Biopsy Knife
Thermoformed Enclosure for Vibrotactile Tester
Plastic Enclosure for the AccuCure 3000 Dental Laser System
Materials & Analysis of Overmolded Ski Pole Grip
Determination of Lens Surface Temperature
Medical Device Introducer—Materials & Fabrication
Porcelain Dispensing System for Dental Fabrication
Heated Matched-Mold for Thermal Lens Production
A Pet Collar Drug Delivery System
MIDDS—University of Utah Biomedical Research Support Grant
Thermal Energy Generation from Palladium Hydrolytic Cells
MIDDS: A Miniature Implantable Drug Delivery System
Fibrous Substrates for Cell Culture, NSF SBIR
Fibrous Substrates for Cell Culture, NIH SBIR
Subcutaneous Peritoneal Access Device: Review of Potential Development Projects

Specifications

ABE Field Ventilator: Mechanical and Housing Specification
Gemini Protein Binding Biosensor
CURIOSITY G2 Wireless Earbuds: Assembly and QC Specification
Optical Module and Assembly for Crawling Robot
Stem Cell Delivery Device: Design and Product Specification
AcmeBio Test Plate: Rack + Lid Mold Specification
Thermaflux Product Development Specification
Design Specification: Site-Rite Ultrasound Probe Handle
Head Lice Treatment Device
Therapeutic Laser Handpiece Product Specification
TIRF Diagnostic Device Cartridge and Instrument
Portable Photo Booth Product Specification
Cellulite Reduction System Design Specification

Business Documents

Syrasist™ Syringe Aspiration Accessory—Licensing Plan and Financial Analysis, in preparation
Celluxe™ Advanced Cell Culture Products—Business Plan and Financial Analysis, 2015
Quikey™ Rapid Key Link—Business and Licensing Plan and Financial Analysis, 1999
Calapso™ Drinkware Products—Business Plan and Financial Analysis, 1994
SportStax™ Production Financial Analysis, 1993
VersaGlove™ High-performance Gloves—Business Plan and Financial Analysis, 1991

Publications Gergely M, Shkurko K, Simon E. A Novel Technique for Automated Mass Measurements of Individual Snowflakes (AGU A23A-0177). Poster presented at: the American Geophysical Union Fall Meeting; 12-16 December 2016; San Francisco, CA.

Herron JN, Wang H-K, Tan L, Brown SZ, Terry AH, Durtschi JD, Simon EM, Astill ME, Smith RS, Christensen DA. Planar Waveguide Biosensors for Point-Of-Care Clinical and Molecular Diagnostics. In: Fluorescence Sensors and Biosensors (R. B. Thompson, Ed.). Marcel Dekker, New York, 2006. pp. 283-332.

Simon E. "Be Careful with the 'Custom' Device Exclusion," SCOPE, 2(1), February 1995, p. 6.

Citations Petrik, S, et al., Chapter: Functional Nanofibers for Sensors, In book: Electrospinning – Material Technology of the Future, 2022, IntechOpen: https://www.intechopen.com/books/11127.

Anstey A, et al., Nanofibrillated polymer systems: Design, application, and current state of the art. Prog. Polymer Sci, 113 (2020), Elsevier, New York, p. 2.

Chapter 10 - Electrospun Nanofibrous Filtration Membranes for Heavy Metals and Dye Removal, in Nanoscale Materials in Water Purification - Micro and Nano Technologies, 2019, Elsevier, New York, p. 5.

Marzioch, J, Microsensor System for the Metabolic Monitoring in Cancer Cell Culture, Doctoral Thesis, Albert-Ludwigs-Universität Freiburg im Breisgau, 2019, Ch. 3.1 Cell Culturing, p. 40.

Presentations Rapid IVD testing using Planar Waveguide Biosensors. Presented at Biodot Inc. St. Paul Workshop "Emerging Technologies to Enable Quantitative Rapid Tests". 23-25 June 2008. St. Paul Hotel, St. Paul, Minnesota.

Growing Better Cells for Science. Presented at the Wayne Brown Institute Deal Forum. 15 November 2006. Salt Lake City, Utah.

ACCS – Advanced Cell Culture System. Presented at HyClone Laboratories Inc. 29 March 2005. Logan, Utah.

Multiple Vessicle Implantable Drug Delivery Device. Presented to Merck Sharp & Dohme. March 2020. Center for Engineering Design, Salt Lake City, Utah.

Fluoropolymer-based Electret Materials. Presented to DARPA. July 1988. Center for Engineering Design, Salt Lake City, Utah.

Awards & Affiliations Intermountain Society of Inventors and Designers | Society of Plastics Engineers
Intermountain Biomedical Association | Utah Soc for Biomaterials Research (President, 1985)
College of Engineering Scholarship, U of Utah | Regent's Scholarship, U of Michigan
Tau Beta Pi, Engineering Honor Society | Phi Kappa Phi, National Honor Society

After Hours Inventing | Cooking | Road & Mountain Biking | Alpine & Nordic Skiing | Whitewater Kayaking