UNITED STATES PATENT AND TRADEMARK OFFICE

UNITED STATES DEPARTMENT OF COMMERCE
United States Patent and Trademark Office
Address: COMMISSIONER FOR PATENTS
P.O. Box 1450
Alexandria, Virginia 22313-1450
www.uspto.gov

APPLICATION NO.	FILING DATE	FIRST NAMED INVENTOR	ATTORNEY DOCKET NO.	CONFIRMATION NO.
10/646,246	08/22/2003	Stuart Stephen Papworth Parkin	ARC920030057US1	9407

30355 7590 12/02/2004

DANIEL E. JOHNSON
IBM CORPORATION, ALMADEN RESEARCH CENTER
INTELLECTUAL PROPERTY LAW DEPT. C4TA/J2B
650 HARRY ROAD
SAN JOSE, CA 95120-6099

EXAMINER
NGUYEN, HOA T

ART UNIT	PAPER NUMBER
2652	

DATE MAILED: 12/02/2004

Please find below and/or attached an Office communication concerning this application or proceeding.

PTO-90C (Rev. 10/03)

IP Bridge Exhibit 2081
Western Digital v. IP Bridge
IPR2024-01493

Notice of Abandonment	Application No.	Applicant(s)
	10/646,246	PARKIN, STUART STEPHEN PAPWORTH
	Examiner	Art Unit
	Nguyen, Hoa T	2652

-- The MAILING DATE of this communication appears on the cover sheet with the correspondence address--

This application is abandoned in view of:

1. ☐ Applicant's failure to timely file a proper reply to the Office letter mailed on _____.
   (a) ☐ A reply was received on _____ (with a Certificate of Mailing or Transmission dated _____), which is after the expiration of the period for reply (including a total extension of time of _____ month(s)) which expired on _____.
   (b) ☐ A proposed reply was received on _____, but it does not constitute a proper reply under 37 CFR 1.113 (a) to the final rejection.
   (A proper reply under 37 CFR 1.113 to a final rejection consists only of: (1) a timely filed amendment which places the application in condition for allowance; (2) a timely filed Notice of Appeal (with appeal fee); or (3) a timely filed Request for Continued Examination (RCE) in compliance with 37 CFR 1.114).
   (c) ☐ A reply was received on _____ but it does not constitute a proper reply, or a bona fide attempt at a proper reply, to the non-final rejection. See 37 CFR 1.85(a) and 1.111. (See explanation in box 7 below).
   (d) ☐ No reply has been received.

2. ☐ Applicant's failure to timely pay the required issue fee and publication fee, if applicable, within the statutory period of three months from the mailing date of the Notice of Allowance (PTOL-85).
   (a) ☐ The issue fee and publication fee, if applicable, was received on _____ (with a Certificate of Mailing or Transmission dated _____), which is after the expiration of the statutory period for payment of the issue fee (and publication fee) set in the Notice of Allowance (PTOL-85).
   (b) ☐ The submitted fee of $_____ is insufficient. A balance of $_____ is due.
   The issue fee required by 37 CFR 1.18 is $_____. The publication fee, if required by 37 CFR 1.18(d), is $_____.
   (c) ☐ The issue fee and publication fee, if applicable, has not been received.

3. ☐ Applicant's failure to timely file corrected drawings as required by, and within the three-month period set in, the Notice of Allowability (PTO-37).
   (a) ☐ Proposed corrected drawings were received on _____ (with a Certificate of Mailing or Transmission dated _____), which is after the expiration of the period for reply.
   (b) ☐ No corrected drawings have been received.

4. ■ The letter of express abandonment which is signed by the attorney or agent of record, the assignee of the entire interest, or all of the applicants.

5. ☐ The letter of express abandonment which is signed by an attorney or agent (acting in a representative capacity under 37 CFR 1.34(a)) upon the filing of a continuing application.

6. ☐ The decision by the Board of Patent Appeals and Interference rendered on _____ and because the period for seeking court review of the decision has expired and there are no allowed claims.

7. ☐ The reason(s) below:

Barbara J Debnam
Barbara J Debnam
Management & Program Analyst
Art Unit: 3900

Petitions to revive under 37 CFR 1.137(a) or (b), or requests to withdraw the holding of abandonment under 37 CFR 1.181, should be promptly filed to minimize any negative effects on patent term.

UNITED STATES PATENT AND TRADEMARK OFFICE

COMMISSIONER FOR PATENTS
UNITED STATES PATENT AND TRADEMARK OFFICE
WASHINGTON, D.C. 20231
www.uspto.gov

APPLICATION NUMBER	FILING RECEIPT DATE	FIRST NAMED APPLICANT	ATTORNEY DOCKET NUMBER
10/646,246	08/22/2003	Stuart Stephen Papworth Parkin	ARC920030057US1

CONFIRMATION NO.
9407

DANIEL E. JOHNSON
IBM CORPORATION, ALMADEN RESEARCH CENTER
INTELLECTUAL PROPERTY LAW DEPT. C4TA/J2B
650 HARRY ROAD
SAN JOSE CA 95120-6099

Date Mailed: December 2, 2004

Decision Granting Petition under 37 CFR 1.138(c)

The declaration of express abandonment is recognized

This is in response to the petition under 37 CFR 1.138(c), for express abandonment to avoid publication of the above-identified application.

The petition is granted.

The express abandonment is recognized and the application has been withdrawn from publication.

A notice of abandonment is attached/will be mailed in due course.

Telephone inquiries should be directed to the Office of Patent Publication, the Pre-Grant Publication Division, at 703-605-4283.

Barbara J. Albrecht

Pre-Grant Publication Division
Office of Patent Publication

Rev. 10/01

PTO/SB/24A (09-04)
Approved for use through 07/31/2006. OMB 0651-0031
U.S. Patent and Trademark Office; U.S. DEPARTMENT OF COMMERCE
Under the Paperwork Reduction Act of 1995, no persons are required to respond to a collection of information unless it displays a valid OMB control number.

PETITION FOR EXPRESS ABANDONMENT TO AVOID PUBLICATION UNDER 37 CFR 1.138(c)

Fax the petition directly to the Pre-Grant Publication Division at (703) 305-8568
Or Mail the petition to:
Mail Stop Express Abandonment
Commissioner for Patents
P.O. Box 1450, Alexandria, VA 22313-1450

Application Number	10/646,246
Filing Date	August 22, 2003
First Named Inventor	Stuart Stephen Papworth Parkin
Art Unit	2652
Examiner Name	Nguyen, Hoa T.
Attorney Docket Number	ARC920030057US1

Petition for Express Abandonment to Avoid Publication under 37 CFR 1.138(c)
I hereby petition to expressly abandon the above-identified application to avoid publication.

Petition Fee – must be filed with petition to avoid delays in recognizing the petition.

a. ☑ The Director is hereby authorized to charge the petition fee under 37 CFR 1.17(h) to Deposit Account No. 09-0441. I have enclosed a duplicate copy of this sheet.

OK FOR ABANDONMENT

b. ☐ Check in the amount of $ _____ is enclosed.

c. ☐ Payment by credit card (Form PTO-2038 is enclosed).

NOV 2 4 2004

PG PUB DIVISION
INITIALS BKD

NOTE: A paper requesting express abandonment of an application is not effective unless and until an appropriate USPTO official recognizes and acts on the paper. See the Manual of Patent Examining Procedure (MPEP), section 711.01. In addition, the paper will not stop publication of the application unless a petition under 37 CFR 1.138(c) is recognized and acted on by the Pre-Grant Publication Division in sufficient time to avoid publication (e.g., more than four (4) weeks prior to the projected publication date).

I am the: ☐ applicant.

☐ assignee of record of the entire interest. See 37 CFR 3.71.
Statement under 37 CFR 3.73(b) is enclosed. (Form PTO/SB/96)

☑ attorney or agent of record. Registration Number 37,033

Daniel E. Johnson
Signature

November 23, 2004
Date

Daniel E. Johnson
Typed or printed name

408-927-3367
Telephone Number

Note: Signatures of all the inventors or assignees of record of the entire interest or their representative(s) are required. Submit multiple forms if more than one signature is required, see below.

☑ Total of 1 forms are submitted.

This collection of information is required by 37 CFR 1.138(c). The information is required to obtain or retain a benefit by the public which is to file (and by the USPTO to process) an application. Confidentiality is governed by 35 U.S.C. 122 and 37 CFR 1.11 and 1.14. This collection is estimated to take 12 minutes to complete, including gathering, preparing, and submitting the completed application form to the USPTO. Time will vary depending upon the individual case. Any comments on the amount of time you require to complete this form and/or suggestions for reducing this burden, should be sent to the Chief Information Officer, U.S. Patent and Trademark Office, U.S. Department of Commerce, P.O. Box 1450, Alexandria, VA 22313-1450. DO NOT SEND FEES OR COMPLETED FORMS TO THIS ADDRESS. **SEND TO: Mail Stop Express Abandonment, Commissioner for Patents, P.O. Box 1450, Alexandria, VA 22313-1450.**

If you need assistance in completing the form, call 1-800-PTO 9199 and select option 2.

11/24/2004 KKING1 00000007 090441 10646246
01 FC:1464 130.00 DA

RECEIVED
USPTO-PG PUBS
NOV 2 3 2004

PTO/SB/97 (08-00)
Approved for use through 10/31/2002. OMB 0651-0031
U.S. Patent and Trademark Office; U.S. DEPARTMENT OF COMMERCE
Under the Paperwork Reduction Act of 1995, no persons are required to respond to a collection of information unless it contains a valid OMB control number.

ATTN: PRE-GRANT PUBLICATION DIVISION FAX NUMBER: (703) 305-8568

Certificate of Transmission under 37 CFR 1.8

I hereby certify that this correspondence is being facsimile transmitted to the United States Patent and Trademark Office

on November 23, 2004
Date

Signature

Cheryl G. Ruby
Typed or printed name of person signing Certificate

Note: Each paper must have its own certificate of transmission, or this certificate must identify each submitted paper.

PETITION FOR EXPRESS ABANDONMENT TO AVOID PUBL. UNDER 37 CFR 1.138(c)

TOTAL NUMBER OF PAGES SUBMITTED INCLUDING COVER PAGE: 2

SERIAL NUMBER: 10/646,246 FILED: August 22, 2003

INVENTOR: Stuart S. P. Parkin DOCKET NUMBER: ARC920030057US1

Burden Hour Statement: This form is estimated to take 0.03 hours to complete. Time will vary depending upon the needs of the individual case. Any comments on the amount of time required to complete this form should be sent to the Chief Information Officer, U.S. Patent and Trademark Office, Washington, DC 20231. DO NOT SEND FEES OR COMPLETED FORMS TO THIS ADDRESS. SEND TO: Assistant Commissioner for Patents, Washington, DC 20231.

OIPE JC148 APR 19 2004 PATENT & TRADEMARK OFFICE

PTO/SB/21 (08-00)
Approved for use through 10/31/2002. OMB 0651-0031
U.S. Patent and Trademark Office: U.S. DEPARTMENT OF COMMERCE
Under the Paperwork Reduction Act of 1995, no persons are required to respond to a collection of information unless it displays a valid OMB control number.

TRANSMITTAL FORM

(to be used for all correspondence after initial filing)

Application Number	10/646,246
Filing Date	08/22/2003
First Named Inventor	S. S. P. Parkin
Group Art Unit	1762
Examiner Name	to be assigned
Total Number of Pages in This Submission	
Attorney Docket Number	ARC920030057US1

ENCLOSURES *(check all that apply)*

- [x] Fee Transmittal Form
  - [ ] Fee Attached
- [ ] Amendment / Reply
  - [ ] After Final
  - [ ] Affidavits/declaration(s)
- [ ] Extension of Time Request
- [ ] Express Abandonment Request
- [x] Information Disclosure Statement
- [ ] Certified Copy of Priority Document(s)
- [ ] Response to Missing Parts/ Incomplete Application
  - [ ] Response to Missing Parts under 37 CFR 1.52 or 1.53
- [ ] Assignment Papers *(for an Application)*
- [ ] Drawing(s)
- [ ] Licensing-related Papers
- [ ] Petition
- [ ] Petition to Convert to a Provisional Application
- [ ] Power of Attorney, Revocation Change of Correspondence Address
- [ ] Terminal Disclaimer
- [ ] Request for Refund
- [ ] CD, Number of CD(s) _____
- [ ] After Allowance Communication to Group
- [ ] Appeal Communication to Board of Appeals and Interferences
- [ ] Appeal Communication to Group *(Appeal Notice, Brief, Reply Brief)*
- [ ] Proprietary Information
- [ ] Status Letter
- [ ] Other Enclosure(s) *(please identify below)*:

Remarks

SIGNATURE OF APPLICANT, ATTORNEY, OR AGENT

Firm or Individual name	Daniel E. Johnson
Signature	Daniel E Johnson
Date	04/14/2004

CERTIFICATE OF MAILING

I hereby certify that this correspondence is being deposited with the United States Postal Service with sufficient postage as first class mail in an envelope addressed to: Commissioner for Patents, P.O.Box 1450, Alexandria, VA 22313-1450 on this date: 04/14/2004

Typed or printed name	Cheryl G. Ruby		
Signature	Cheryl G Ruby	Date	4/14/04

Burden Hour Statement: This form is estimated to take 0.2 hours to complete. Time will vary depending upon the needs of the individual case. Any comments on the amount of time you are required to complete this form should be sent to the Chief Information Officer, U.S. Patent and Trademark Office, Washington, DC 20231. DO NOT SEND FEES OR COMPLETED FORMS TO THIS ADDRESS. SEND TO: Assistant Commissioner for Patents, Washington, DC 20231.

APR 1 9 2004
JC148
PATENT & TRADEMARK OFFICE

PTO/SB/17 (10-01)
Approved for use through 10/31/2002. OMB 0651-0032
U.S. Patent and Trademark Office; U.S. DEPARTMENT OF COMMERCE

Under the Paperwork Reduction Act of 1995, no persons are required to respond to a collection of information unless it displays a valid OMB control number.

FEE TRANSMITTAL for FY 2002

Patent fees are subject to annual revision.

TOTAL AMOUNT OF PAYMENT ($) 0.00

Complete if Known	
Application Number	10/646,246
Filing Date	08/22/2003
First Named Inventor	S. S. P. Parkin
Examiner Name	to be assigned
Group Art Unit	1762
Attorney Docket No.	ARC920030057US1

METHOD OF PAYMENT

1. ☑ The Commissioner is hereby authorized to charge indicated fees and credit any overpayments to:

Deposit Account Number: 09-0441

Deposit Account Name: IBM CORPORATION

☑ Charge Any Additional Fee Required Under 37 CFR 1.16 and 1.17

☐ Applicant claims small entity status. See 37 CFR 1.27

2. ☐ Payment Enclosed:

☐ Check ☐ Credit card ☐ Money Order ☐ Other

FEE CALCULATION

1. BASIC FILING FEE

Large Entity Fee Code	Large Entity Fee ($)	Small Entity Fee Code	Small Entity Fee ($)	Fee Description	Fee Paid
101	740	201	370	Utility filing fee	
106	330	206	165	Design filing fee	
107	510	207	255	Plant filing fee	
108	740	208	370	Reissue filing fee	
114	160	214	80	Provisional filing fee	

SUBTOTAL (1) ($) 0.00

2. EXTRA CLAIM FEES

	Extra Claims		Fee from below	Fee Paid
Total Claims		-20** =	x 18.00	= 0.00
Independent Claims		- 3** =	x 84.00	= 0.00
Multiple Dependent				=

Large Entity Fee Code	Large Entity Fee ($)	Small Entity Fee Code	Small Entity Fee ($)	Fee Description
103	18	203	9	Claims in excess of 20
102	84	202	42	Independent claims in excess of 3
104	280	204	140	Multiple dependent claim, if not paid
109	84	209	42	** Reissue independent claims over original patent
110	18	210	9	** Reissue claims in excess of 20 and over original patent

SUBTOTAL (2) ($) 0.00

**or number previously paid, if greater; For Reissues, see above

FEE CALCULATION (continued)

3. ADDITIONAL FEES

Large Entity Fee Code	Large Entity Fee ($)	Small Entity Fee Code	Small Entity Fee ($)	Fee Description	Fee Paid
105	130	205	65	Surcharge - late filing fee or oath	
127	50	227	25	Surcharge - late provisional filing fee or cover sheet	
139	130	139	130	Non-English specification	
147	2,520	147	2,520	For filing a request for *ex parte* reexamination	
112	920*	112	920*	Requesting publication of SIR prior to Examiner action	
113	1,840*	113	1,840*	Requesting publication of SIR after Examiner action	
115	110	215	55	Extension for reply within first month	
116	400	216	200	Extension for reply within second month	
117	920	217	460	Extension for reply within third month	
118	1,440	218	720	Extension for reply within fourth month	
128	1,960	228	980	Extension for reply within fifth month	
119	320	219	160	Notice of Appeal	
120	320	220	160	Filing a brief in support of an appeal	
121	280	221	140	Request for oral hearing	
138	1,510	138	1,510	Petition to institute a public use proceeding	
140	110	240	55	Petition to revive - unavoidable	
141	1,280	241	640	Petition to revive - unintentional	
142	1,280	242	640	Utility issue fee (or reissue)	
143	460	243	230	Design issue fee	
144	620	244	310	Plant issue fee	
122	130	122	130	Petitions to the Commissioner	
123	50	123	50	Processing fee under 37 CFR 1.17(q)	
126	180	126	180	Submission of Information Disclosure Stmt	
581	40	581	40	Recording each patent assignment per property (times number of properties)	
146	740	246	370	Filing a submission after final rejection (37 CFR § 1.129(a))	
149	740	249	370	For each additional invention to be examined (37 CFR § 1.129(b))	
179	740	279	370	Request for Continued Examination (RCE)	
169	900	169	900	Request for expedited examination of a design application	

Other fee (specify) _____

*Reduced by Basic Filing Fee Paid

SUBTOTAL (3) ($) 0.00

SUBMITTED BY				Complete (if applicable)	
Name (Print/Type)	Daniel E. Johnson	Registration No. (Attorney/Agent)	37,033	Telephone	408-927-3367
Signature	Daniel E. Johnson			Date	04/14/2004

WARNING: Information on this form may become public. Credit card information should not be included on this form. Provide credit card information and authorization on PTO-2038.

Burden Hour Statement: This form is estimated to take 0.2 hours to complete. Time will vary depending upon the needs of the individual case. Any comments on the amount of time you are required to complete this form should be sent to the Chief Information Officer, U.S. Patent and Trademark Office, Washington, DC 20231. DO NOT SEND FEES OR COMPLETED FORMS TO THIS ADDRESS. SEND TO: Assistant Commissioner for Patents, Washington, DC 20231.

OIPE JC148
APR 1 9 2004
PATENT & TRADEMARK OFFICE

PATENT

IN THE UNITED STATES PATENT AND TRADEMARK OFFICE

In re application of	:	April 14, 2004
S Parkin	:	Group Art Unit: 1762
Serial No.: 10/646,246	:	Examiner: Unknown
Filed: August 22, 2003	:	San Jose, California

Title: MgO tunnel barriers and method of formation

INFORMATION DISCLOSURE STATEMENT

Commissioner for Patents
U.S. Patent and Trademark Office
P. O. Box 1450
Alexandria, VA 22313-1450

Dear Sir:

Under the provisions of 37 CFR § 1.97 through §1.99 and pursuant to Applicant's duty of disclosure under 37 CFR §1.56, Applicant respectfully brings the following document(s) listed on the attached form PTO-1449 to the attention of the Examiner in charge of the above-identified application. Copies of the listed document(s) are provided herewith.

This Information Disclosure Statement is being submitted before receiving a first Office Action on the merits for the above-identified patent application. (No fee is due.)

This submission does not constitute an admission that the cited reference(s) are relevant or material to the claims. The reference(s) are only cited as constituting related art of which Applicant is aware.

It is respectfully requested that the listed references be considered by the Examiner and formally made of record in this application.

The Director is hereby authorized to charge payment of any deficiency in the above fee(s) or to charge any additional fees required under 37 CFR § 1.16 or 1.17 or credit any overpayment to Deposit Account No. 09-0441. A duplicate copy of this authorization is attached for the Finance Branch.

Respectfully submitted,

S. Parkin

By Daniel E Johnson
Daniel E. Johnson (#37,033)
Agent for Applicant
Phone (408) 927-3367

DEJ:cgr

Attachments

OIPE JC148
APR 1 9 2004
PATENT & TRADEMARK OFFICE

PTO/SB/08A (10-01)
Approved for use through 10/31/2002. OMB 0651-0031
U.S. Patent and Trademark Office: U.S. DEPARTMENT OF COMMERCE
Under the Paperwork Reduction Act of 1995, no persons are required to respond to a collection of information unless it contains a valid OMB control number.

Substitute for form 1449A/PTO

INFORMATION DISCLOSURE STATEMENT BY APPLICANT

(use as many sheets as necessary)

Sheet	1	of	5

Complete if Known	
Application Number	10/646,246
Filing Date	August 22, 2003
First Named Inventor	S. Parkin
Art Unit	1762
Examiner Name	Unassigned
Attorney Docket Number	ARC920030057US1

U.S. PATENT DOCUMENTS

Examiner Initials*	Cite No.[1]	Document Number Number - Kind Code[2] (if known)	Publication Date MM-DD-YYYY	Name of Patentee or Applicant of Cited Document	Pages, Columns, Lines, Where Relevant Passages or Relevant Figures Appear
		US- 5,390,061	02-14-1995	Nakatani et al.	
		US- 5,465,185	11-07-1995	Heim et al.	
		US- 5,640,343	06-17-1997	Gallagher et al.	
		US- 5,650,958	07-22-1997	Gallagher et al.	
		US- 5,729,410	03-17-1998	Fontana Jr. et al.	
		US- 5,764,567	06-09-1998	Parkin	
		US- 5,841,692	11-24-1998	Gallagher et al.	
		US- 5,936,293	08-10-1999	Parkin	
		US- 6,153,320	11-28-2000	Parkin	
		US- 6,226,160	05-01-2001	Gallagher et al.	
		US- 6,347,049	02-12-2002	Childress et al.	
		US- 6,359,289	03-19-2002	Parkin	
		US- 6,388,268	05-14-2002	Kim et al.	
		US- 6,392,281	05-21-2002	Tsuge	
		US- 6,429,497	08-06-2002	Nickel	
		US- 6,535,365	03-18-2003	Lukaszew et al.	
		US- 2002/0076940 A1	06-20-2002	Hibino	
		US- 2002/0097534 A1	07-25-2002	Sun et al.	
		US- 2002/0097535 A1	07-25-2002	Ito et al.	
		US- 2002/0097537 A1	07-25-2002	Shimazawa	

FOREIGN PATENT DOCUMENTS

Examiner Initials*	Cite No.[1]	Foreign Patent Document Country Code[3] -Number[4] - Kind Code[5] (if known)	Publication Date MM-DD-YYYY	Name of Patentee or Applicant of Cited Document	Pages, Columns, Lines, Where Relevant Passages or Relevant Figures Appear	T[6]

Examiner Signature		Date Considered	

*EXAMINER: Initial if reference considered, whether or not citation is in conformance with MPEP 609. Draw line through citation if not in conformance and not considered. Include copy of this form with next communication to applicant.

[1] Applicant's unique citation designation number (optional). [2] See Kinds Codes of USPTO Patent Documents at www.uspto.gov or MPEP 901.04. [3] Enter Office that issued the document, by the two-letter code (WIPO Standard ST.3). [4] For Japanese patent documents, the indication of the year of the reign of the Emperor must precede the serial number of the patent document. [5] Kind of document by the appropriate symbols as indicated on the document under WIPO Standard ST. 16 if possible. [6] Applicant is to place a check mark here if English language Translation is attached.

Burden Hour Statement: This form is estimated to take 2.0 hours to complete. Time will vary depending upon the needs of the individual case. Any comments on the amount of time you are required to complete this form should be sent to the Chief Information Officer, U.S. Patent and Trademark Office, Washington, DC 20231. DO NOT SEND FEES OR COMPLETED FORMS TO THIS ADDRESS. SEND TO: Assistant Commissioner for Patents, Washington, DC 20231.

OIPE JC148
APR 1 9 2004
PATENT & TRADEMARK OFFICE

PTO/SB/08A (10-01)
Approved for use through 10/31/2002. OMB 0651-0031
U.S. Patent and Trademark Office: U.S. DEPARTMENT OF COMMERCE
Under the Paperwork Reduction Act of 1995, no persons are required to respond to a collection of information unless it contains a valid OMB control number.

Substitute for form 1449A/PTO

INFORMATION DISCLOSURE STATEMENT BY APPLICANT

(use as many sheets as necessary)

Sheet 2 of 5

Complete if Known	
Application Number	10/646,246
Filing Date	August 22, 2003
First Named Inventor	S. Parkin
Art Unit	1762
Examiner Name	Unassigned
Attorney Docket Number	ARC920030057US1

U.S. PATENT DOCUMENTS

Examiner Initials*	Cite No.[1]	Document Number Number - Kind Code[2] (if known)	Publication Date MM-DD-YYYY	Name of Patentee or Applicant of Cited Document	Pages, Columns, Lines, Where Relevant Passages or Relevant Figures Appear
		US- 2002/0114112 A1	08-22-2002	Nakashio et al.	
		US- 2002/0159203 A1	10-31-2002	Saito et al.	
		US- 2002-0163764 A1	11-07-2002	Nakazawa et al.	
		US- 2002/0164828 A1	11-07-2002	Ishiwata et al.	
		US- 2002/0191355 A1	12-19-2002	Hiramoto et al.	
		US- 2003/0035249 A1	02-20-2003	Ho et al.	
		US- 2003/0058685 A1	03-27-2003	Tran et al.	
		US-			
		US-			
		US-			
		US-			
		US-			
		US-			
		US-			
		US-			
		US-			
		US-			
		US-			
		US-			
		US-			

FOREIGN PATENT DOCUMENTS

Examiner Initials*	Cite No.[1]	Foreign Patent Document Country Code[3] -Number[4] - Kind Code[5] (if known)	Publication Date MM-DD-YYYY	Name of Patentee or Applicant of Cited Document	Pages, Columns, Lines, Where Relevant Passages or Relevant Figures Appear	T[6]
		JP 2000 322714	24-Nov-2000	Teruaki et al.	Abstract	

Examiner Signature		Date Considered	

*EXAMINER: Initial if reference considered, whether or not citation is in conformance with MPEP 609. Draw line through citation if not in conformance and not considered. Include copy of this form with next communication to applicant.

[1] Applicant's unique citation designation number (optional). [2] See Kinds Codes of USPTO Patent Documents at www.uspto.gov or MPEP 901.04. [3] Enter Office that issued the document, by the two-letter code (WIPO Standard ST.3). [4] For Japanese patent documents, the indication of the year of the reign of the Emperor must precede the serial number of the patent document. [5] Kind of document by the appropriate symbols as indicated on the document under WIPO Standard ST. 16 if possible. [6] Applicant is to place a check mark here if English language Translation is attached.

Burden Hour Statement: This form is estimated to take 2.0 hours to complete. Time will vary depending upon the needs of the individual case. Any comments on the amount of time you are required to complete this form should be sent to the Chief Information Officer, U.S. Patent and Trademark Office, Washington, DC 20231. DO NOT SEND FEES OR COMPLETED FORMS TO THIS ADDRESS. SEND TO: Assistant Commissioner for Patents, Washington, DC 20231.

OIPE JC148
APR 1 9 2004
PATENT & TRADEMARK OFFICE

PTO/SB/08B (10-01)
Approved for use through 10/31/2002. OMB 0651-0031
U.S. Patent and Trademark Office: U.S. DEPARTMENT OF COMMERCE
Under the Paperwork Reduction Act of 1995, no persons are required to respond to a collection of information unless it contains a valid OMB control number.

Substitute for form 1449B/PTO

INFORMATION DISCLOSURE STATEMENT BY APPLICANT

(use as many sheets as necessary)

Sheet	3	of	5

Complete if Known	
Application Number	10/646,246
Filing Date	August 22, 2003
First Named Inventor	S. Parkin
Group Art Unit	1762
Examiner Name	Unassigned
Attorney Docket Number	ARC920030057US1

OTHER PRIOR ART -- NON PATENT LITERATURE DOCUMENTS

Examiner Initials*	Cite No.[1]	Include name of the author (in CAPITAL LETTERS), title of the article (when appropriate), title of the item (book, magazine, journal, serial, symposium, catalog, etc.), date, page(s), volume-issue number(s), publisher, city and/or country where published.	T[2]
		M. Julliere, "Tunneling Between Ferromagnetic Films", Physics Letters, Vol. 54A, Number 3, September 8, 1975, pp. 225-226.	
		R. Meservey et al., "Spin-Polarized Electron Tunneling", Physics Reports (Review Section of Physics Letters) Vol. 238, No. 4, 1994, pp. 173-243.	
		J. S. Moodera et al., "Large Magnetoresistance at Room Temperature in Ferromagnetic Thin Film Tunnel Junctions", Physical Review Letters, Vol. 74, No. 16, April 17, 1995, pp. 3273-3276.	
		T. Miyazaki et al., "Giant magnetic tunneling effect in Fe/A12O3/Fe junction", Journal of Magnetism and Magnetic Materials , Vol. 139, 1995, pp. L231-L234.	
		D. J. Keavney et al., "Perpendicular conductance and magnetic coupling in epitaxial Fe/MgO/Fe(100) trilayers", J. Appl. Phys., Vol. 81, No. 2, January 15, 1997, pp. 795-798.	
		P. K. Wong et al., "High conductance magnetoresistive tunnel junctions with multiply oxidized barrier", Journal of Applied Physics, Vol. 83, No. 11, June 1, 1998, pp. 6697-6699.	
		E. Y. Tsymbal et al., "Spin-polarized electron tunneling across a disordered insulator", Physical Review B, Vol. 58, No. 1, July 1, 1998-I, pp. 432-437.	
		S.S.P. Parkin et al., "Exchange-biased magnetic tunnel junctions and application to nonvolatile magnetic random access memory (invited)", J. of Applied Physics, Vol. 85, No. 8, April 15, 1999, pp. 5828-5833.	
		K. Aoshima et al., "Thermal deterioration mechanism of CoFeB/PdPtMn Spin valves", J. of Applied Physics, Vol. 85, No. 8, April 15, 1999, pp. 5042-5044.	
		Ph. Mavropoulos et al., "Complex Band Structure and Tunneling through Ferromagnet/Insulator/Ferromagnet Junctions", Phys. Review Letters, Vol. 85, No. 5, July 31, 2000, pp. 1088-1091.	
		D. J. Monsma et al., "Spin polarization of tunneling current from ferromagnet/A12O3 Interfaces using copper-doped aluminum superconducting films", Applied Physics Letters, Vol. 77, No. 5, July 31, 2000, pp. 720-722.	

Examiner Signature		Date Considered	

*EXAMINER: Initial if reference considered, whether or not citation is in conformance with MPEP 609. Draw line through citation if not in conformance and not considered. Include copy of this form with next communication to applicant.

[1] Applicant's unique citation designation number (optional). [2] Applicant is to place a check mark here if English language Translation is attached.

Burden Hour Statement: This form is estimated to take 2.0 hours to complete. Time will vary depending upon the needs of the individual case. Any comments on the amount of time you are required to complete this form should be sent to the Chief Information Officer, U.S. Patent and Trademark Office, Washington, DC 20231. DO NOT SEND FEES OR COMPLETED FORMS TO THIS ADDRESS. SEND TO: Assistant Commissioner for Patents, Washington, DC 20231.

OIPE JC146
APR 1 9 2004
PATENT & TRADEMARK OFFICE

PTO/SB/08B (10-01)
Approved for use through 10/31/2002. OMB 0651-0031
U.S. Patent and Trademark Office: U.S. DEPARTMENT OF COMMERCE
Under the Paperwork Reduction Act of 1995, no persons are required to respond to a collection of information unless it contains a valid OMB control number.

Substitute for form 1449B/PTO

INFORMATION DISCLOSURE STATEMENT BY APPLICANT

(use as many sheets as necessary)

Sheet 4 of 5

Complete if Known	
Application Number	10/646,246
Filing Date	August 22, 2003
First Named Inventor	S. Parkin
Group Art Unit	1762
Examiner Name	Unassigned
Attorney Docket Number	ARC920030057US1

OTHER PRIOR ART – NON PATENT LITERATURE DOCUMENTS

Examiner Initials*	Cite No.[1]	Include name of the author (in CAPITAL LETTERS), title of the article (when appropriate), title of the item (book, magazine, journal, serial, symposium, catalog, etc.), date, page(s), volume-issue number(s), publisher, city and/or country where published.	T[2]
		X.-F. Han et al., "Fabrication of high-magnetoresistance tunnel junctions using Co75Fe25 ferromagnetic electrodes", Applied Physics Letters, Vol. 77, No. 2, July 10, 2000, pp 283-285.	
		H. Xi, "Annealing Effect on Exchange Bias in Ni81Fe19/Cr50Mn50 Bilayers", IEEE Transactions on Magnetics, Vol. 36, No. 5, September 2000, pp. 2644-2646.	
		S. Cardoso et al., "High thermal stability tunnel junctions", Journal of Applied Physics, Vol. 87, No. 9, May 1, 2000, pp. 6058-6060.	
		S. Cardoso et al., "Spin-tunnel-junction thermal stability and interface interdiffusion above 300 C", Applied Physics Letters, Vol. 76, No. 5, January 31, 2000, pp. 610-612.	
		M. Takiguchi et al., "Thermal degradation of spin valve multilayers caused by Mn Migration", Journal of Applied Physics, Vol. 87, No. 5, March 1, 2000, pp. 2469-2471.	
		H.L. Meyerheim et al., "Geometrical and Compositional Structure at Metal-Oxide Interfaces: MgO on Fe(001)", Physical Review Letters, Vol. 87, No. 7, August 13, 2001, pp. 076102-1 through 076102-4.	
		M. Bowen et al., "Large magnetoresistance in Fe/MgO/FeCo(001) epitaxial tunnel junctions on GaAs(001)", Applied Physics Letters, Vol. 79, No. 11, Sept. 10, 2001, pp. 1655-1657.	
		W. Wulfhekel et al., "Single-crystal magnetotunnel junctions", Applied Physics Letters, Vol. 78, No. 4, Jan. 22, 2001, pp. 509-511.	
		W. H. Butler et al., "Spin-dpendent tunneling conductance of Fe/MgO/Fe sandwiches", Physical Review B, Vol. 63, Jan. 8, 2001, pp. 054416-1 through 054416-12.	
		Y. Kim et al., "Magnetoresistance and interlayer diffusion in PtMn spin valves upon postdeposition annealing", J. of Applied Physics, Vol. 89, No. 11, June 1, 2001, pp. 6907-6909.	
		S. Yuasa et al., "Spin-Polarized Resonant Tunneling in Magnetic Tunnel Junctions", Science, Vol. 297, July 12, 2002, pp. 234-237.	

Examiner Signature		Date Considered	

*EXAMINER: Initial if reference considered, whether or not citation is in conformance with MPEP 609. Draw line through citation if not in conformance and not considered. Include copy of this form with next communication to applicant.

[1] Applicant's unique citation designation number (optional). [2] Applicant is to place a check mark here if English language Translation is attached.

Burden Hour Statement: This form is estimated to take 2.0 hours to complete. Time will vary depending upon the needs of the individual case. Any comments on the amount of time you are required to complete this form should be sent to the Chief Information Officer, U.S. Patent and Trademark Office, Washington, DC 20231. DO NOT SEND FEES OR COMPLETED FORMS TO THIS ADDRESS. SEND TO: Assistant Commissioner for Patents, Washington, DC 20231.

OIPE JC145
APR 1 9 2004
PATENT & TRADEMARK OFFICE

PTO/SB/08B (10-01)
Approved for use through 10/31/2002. OMB 0651-0031
U.S. Patent and Trademark Office: U.S. DEPARTMENT OF COMMERCE
Under the Paperwork Reduction Act of 1995, no persons are required to respond to a collection of information unless it contains a valid OMB control number.

Substitute for form 1449B/PTO

INFORMATION DISCLOSURE STATEMENT BY APPLICANT

(use as many sheets as necessary)

Sheet 5 of 5

Complete if Known	
Application Number	10/646,246
Filing Date	August 22, 2003
First Named Inventor	S. Parkin
Group Art Unit	1762
Examiner Name	Unassigned
Attorney Docket Number	ARC920030057US1

OTHER PRIOR ART -- NON PATENT LITERATURE DOCUMENTS

Examiner Initials*	Cite No.[1]	Include name of the author (in CAPITAL LETTERS), title of the article (when appropriate), title of the item (book, magazine, journal, serial, symposium, catalog, etc.), date, page(s), volume-issue number(s), publisher, city and/or country where published.	T[2]
		E. Popova et al., "Epitaxial MgO layer for low-resistance and coupling-free magnetic tunnel junctions", Applied Physics Letters, Vol. 81, No. 6, August 5, 2002, pp. 1035-1037.	
		M. Tsunoda et al., "60% magnetoresistance at room temperature in Co-Fe/Al-O/Co-Fe tunnel junctions oxidized with Kr-O2 plasma", Appl. Phys. Letters", Vol. 80, No. 17, April 29, 2002, pp. 3135-3137.	
		X.-G. Zhang et al., "Effects of the iron-oxide layer in Fe-FeO-MgO-Fe tunneling junctions", Physical Review B, Vol. 68, 2003, pp. 092402-1 through 092402-4.	
		S. Mitani et al., "Fe/MgO/FeCo(100) epitaxial magnetic tunneljunctions prepared by using in situ plasma oxidation", Journal of Applied Physics, Vol. 93, No. 10, May 15, 2003, pp. 8041-8043.	
		J. Faure-Vincent et al., "High tunnel magnetoresistance in epitaxial Fe/MgO/Fe tunnel junctions", Applied Physics Letters, Vol. 82, No. 25, June 23, 2003, pp. 4507-4509.	
		M. Zwierzycki et al., "Spin injection through an Fe/InAs interface", Physical Review B, Vol. 67, 2003, pp. 092401-1 through 092401-4.	
		D. Smith et al., "Structural characterization of thin film ferromagnetic tunnel junctions", Journal of Applied Physics, Vol. 83, No. 10, May 15, 1998, pp. 5154-5158.	
		J. Mathon et al., "Theory of tunneling magnetoresistance of an epitaxial Fe/MgO/Fe (001) junction", Physical Review B, Vol. 63, pp. 220403-1 through 220403-4.	
		M. Klaua et al., "Growth, structure, electronic, and magnetic properties of MgO/Fe(001) bilayers and Fe/MgO/Fe(001) trilayers", Physical Review B, Vol. 64, pp.134411-1 through 134411-8.	

Examiner Signature		Date Considered	

*EXAMINER: Initial if reference considered, whether or not citation is in conformance with MPEP 609. Draw line through citation if not in conformance and not considered. Include copy of this form with next communication to applicant.

[1] Applicant's unique citation designation number (optional). [2] Applicant is to place a check mark here if English language Translation is attached.

Burden Hour Statement: This form is estimated to take 2.0 hours to complete. Time will vary depending upon the needs of the individual case. Any comments on the amount of time you are required to complete this form should be sent to the Chief Information Officer, U.S. Patent and Trademark Office, Washington, DC 20231. DO NOT SEND FEES OR COMPLETED FORMS TO THIS ADDRESS. SEND TO: Assistant Commissioner for Patents, Washington, DC 20231.

This Page Is Inserted by IFW Operations
and is not a part of the Official Record

BEST AVAILABLE IMAGES

Defective images within this document are accurate representations of the original documents submitted by the applicant.

Defects in the images may include (but are not limited to):

- BLACK BORDERS
- TEXT CUT OFF AT TOP, BOTTOM OR SIDES
- FADED TEXT
- ILLEGIBLE TEXT
- SKEWED/SLANTED IMAGES
- COLORED PHOTOS
- BLACK OR VERY BLACK AND WHITE DARK PHOTOS
- GRAY SCALE DOCUMENTS

IMAGES ARE BEST AVAILABLE COPY.

As rescanning documents *will not* correct images, please do not report the images to the Image Problem Mailbox.

TUNNEL MAGNETORESISTANCE EFFECT TYPE MAGNETIC FIELD DETECTING DEVICE, ITS PRODUCTION AND MAGNETIC HEAD USING THE SAME

Patent Number: JP2000322714
Publication date: 2000-11-24
Inventor(s): TAKEUCHI TERUAKI; NAKATANI RYOICHI; SHIMIZU NOBORU
Applicant(s): HITACHI LTD
Requested Patent: JP2000322714
Application Number: JP19990133410 19990514
Priority Number(s):
IPC Classification: G11B5/39
EC Classification:
Equivalents:

Abstract

PROBLEM TO BE SOLVED: To obtain low electric resistance and high S/N characteristics by forming a layer consisting of elements selected from a group of specified noble metals or alloys of these between an insulating layer and one of ferromagnetic metal layers which form a tunnel junction.
SOLUTION: A thermally oxidized layer 2, first ferromagnetic layer 3, noble metal layer 4, insulating layer 5, and second ferromagnetic layer 6 are laminated in this order on a silicon substrate 1 to form a tunnel junction, and further, an insulating material 2' as a protective film and an electrode 7 are formed to obtain a tunnel magnetoresistance effect element. The noble metal layer 4 consists of elements selected from a group of noble metal elements of Au, Pt, Pd, Rh, Ir and Ru or allots of these, and is formed to 0.4 to 1.0 nm thickness. The insulating layer 5 is formed by first forming an Al or Mg metal film on the noble metal layer 4 and selectively oxidizing the surface of the metal film. In this process, since the noble metal layer 4 and the first ferromagnetic layer 3 under the layer 4 are not oxidized, the thickness of the insulating layer 5 is limited to within the thickness of the Al or Mg metal film, and thus, a desired thin film can be obtd.

Data supplied from the **esp@cenet** database - I2

(19)日本国特許庁（ＪＰ）　(12) 公開特許公報（Ａ）　(11)特許出願公開番号
特開2000－322714
（P2000－322714A）
(43)公開日　平成12年11月24日(2000.11.24)

(51)Int.Cl.⁷	識別記号	ＦＩ	テーマコード(参考)
Ｇ１１Ｂ　5/39		Ｇ１１Ｂ　5/39	５Ｄ０３４

審査請求　有　請求項の数16　ＯＬ　（全 10 頁）

(21)出願番号　特願平11－133410
(22)出願日　平成11年５月14日(1999.5.14)

(71)出願人　000005108
株式会社日立製作所
東京都千代田区神田駿河台四丁目６番地
(72)発明者　竹内　輝明
東京都国分寺市東恋ケ窪一丁目280番地
株式会社日立製作所中央研究所内
(72)発明者　中谷　亮一
東京都国分寺市東恋ケ窪一丁目280番地
株式会社日立製作所中央研究所内
(74)代理人　100061893
弁理士　高橋　明夫　（外１名）

最終頁に続く

(54)【発明の名称】　トンネル磁気抵抗効果型磁界検出素子及びその製造方法とそれを用いた磁気ヘッド

(57)【要約】
【課題】高い磁気抵抗変化率を維持しつつ、電気抵抗が低く信号対雑音比（Ｓ／Ｎ）の大きいトンネル磁気抵抗効果型磁界検出素子を実現する。
【解決手段】第１の強磁性層３の上に貴金属層４を設け、この上に非常に薄いアルミニウム等の金属膜を形成し、それ酸化して絶縁層５を形成する。アルミニウムの酸化処理では、酸化反応が貴金属層４で停止し、その下の強磁性層３には及ばない。このため、絶縁層５の厚さが上記アルミニウム等の金属膜が酸化された層に限定される。さらに、この方法では、下地の強磁性層３が酸化されないので、予め厚さの定められた金属膜を確実に酸化して高品質の絶縁層することができる。このため、トンネル効果における電子に対するポテンシャル障壁を高く、かつ薄くすることができ、高い磁気抵抗変化率と低い電気抵抗が両立して実現される。

図　1

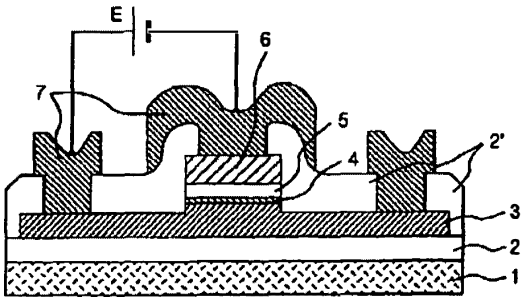

1…基板　2…熱酸化層　2'…絶縁体（SiO_2）
3…第１の強磁性層　4…貴金属層　5…絶縁層
6…第２の強磁性層　６１…分極率の高い磁性層
7…電極　8…反強磁性層　Ｅ…定電圧電源

【特許請求の範囲】

【請求項1】互いに磁化反転する磁界に差のある二つの強磁性金属層の間に絶縁層が存在してトンネル接合を形成するトンネル磁気抵抗効果素子と、前記二つの強磁性金属層間に電圧を印加する電極端子とを備えた磁界検出素子において、一方の強磁性金属層と絶縁層との間に、Au，Pt，Pd，Rh，Ir及びRuの貴金属元素群から選択される少なくとも1種類の元素もしくはこれらの元素の合金からなる貴金属層を設けたことを特徴とするトンネル磁気抵抗効果型磁界検出素子。

【請求項2】上記貴金属層の厚さが1．5nm以下であることを特徴とする請求項1記載のトンネル磁気抵抗効果型磁界検出素子。

【請求項3】上記絶縁層の厚さが3．0nm以下であることを特徴とする請求項1もしくは2記載のトンネル磁気抵抗効果型磁界検出素子。

【請求項4】上記絶縁層の厚さが0．6～0．9nmであることを特徴とする請求項1もしくは2記載のトンネル磁気抵抗効果型磁界検出素子。

【請求項5】上記絶縁層は、上記強磁性金属層に対するポテンシャル障壁の高さが少なくとも1電子ボルトの金属酸化物層からなることを特徴とする請求項1もしくは2記載のトンネル磁気抵抗効果型磁界検出素子。

【請求項6】上記絶縁層が、アルミニウム及びマグネシウムの少なくとも1種の金属酸化物からなることを特徴とする請求項1乃至5いずれか一つに記載のトンネル磁気抵抗効果型磁界検出素子。

【請求項7】互いに磁化反転する磁界に差のある二つの強磁性金属層の間に絶縁層が存在してトンネル接合を形成するトンネル磁気抵抗効果素子と、前記二つの強磁性金属層間に電圧を印加する電極端子とを備えた磁界検出素子の製造方法において、前記いずれか一方の強磁性金属層上に絶縁層を形成する工程を、

①前記強磁性金属層上に下地層として厚さ1．5nm以下のAu，Pt，Pd，Rh，Ir及びRuの貴金属元素群から選択される少なくとも1種類の元素もしくはこれらの元素の合金からなる貴金属層を形成する工程と、

②前記貴金属層上に、酸化することによって容易に絶縁層となり、かつこの絶縁層の前記強磁性金属層に対するポテンシャル障壁の高さが少なくとも1電子ボルトである膜厚3nm以下の金属膜を形成し、前記貴金属層を前記強磁性金属層の酸化防止膜として保護しつつ前記金属膜を選択的に酸化して酸化物層に変換する絶縁層の形成工程とで構成したことを特徴とするトンネル磁気抵抗効果型磁界検出素子の製造方法。

【請求項8】上記金属膜をの厚さを0．6～0．9nmとしたことを特徴とする請求項7記載のトンネル磁気抵抗効果型磁界検出素子の製造方法。

【請求項9】上記金属膜を、アルミニウム及びマグネシウムの少なくとも1種の金属層で形成し、これを酸化して酸化物層に変換する絶縁層の形成工程を有することを特徴とする請求項7もしくは8記載のトンネル磁気抵抗効果型磁界検出素子の製造方法。

【請求項10】上記貴金属層及び上記金属膜の形成は、真空蒸着法もしくはスパッタリング法で形成し、前記金属膜を酸化して酸化物層に変換する絶縁層の形成工程は、酸素雰囲気中の自然酸化処理、熱酸化処理もしくはプラズマ酸化処理のいずれかの酸化処理工程としたことを特徴とする請求項7乃至9のいずれか一つに記載のトンネル磁気抵抗効果型磁界検出素子の製造方法。

【請求項11】互いに磁化反転する磁界に差のある二つの強磁性層の間に絶縁層が存在してトンネル接合を形成するトンネル磁気抵抗効果素子と、前記二つの強磁性層間に電圧を印加する電極端子を有する磁界検出素子と、前記電極端子を通して前記二つの強磁性層間に所定の電圧を印加する定電圧電源とを備えた磁気ヘッドにおいて、前記一方の強磁性層と絶縁層との間に、Au，Pt，Pd，Rh，Ir及びRuの貴金属元素群から選択される少なくとも1種類の元素もしくはこれらの元素の合金からなる貴金属層を設けると共に、前記貴金属層上に形成される前記絶縁層として、前記強磁性金属層に対するポテンシャル障壁の高さが少なくとも1電子ボルトである絶縁層を設けたことを特徴とするトンネル磁気抵抗効果型磁気ヘッド。

【請求項12】上記貴金属層の厚さが1．5nm以下であり、上記絶縁層の厚さが3nm以下であることを特徴とする請求項11記載のトンネル磁気抵抗効果型磁気ヘッド。

【請求項13】上記貴金属層の厚さが1．5nm以下であり、上記絶縁層の厚さが0．4～1．0nmであることを特徴とする請求項11記載のトンネル磁気抵抗効果型磁気ヘッド。

【請求項14】上記絶縁層が、アルミニウム及びマグネシウムの少なくとも1種の金属酸化物からなることを特徴とする請求項11乃至13のいずれか一つに記載のトンネル磁気抵抗効果型磁気ヘッド。

【請求項15】請求項11乃至14のいずれか一つに記載のトンネル磁気抵抗効果型磁気ヘッドと誘導型磁気ヘッドとを組み合わせて構成した記録再生磁気ヘッド。

【請求項16】請求項11乃至15のいずれか一つに記載の磁気ヘッドを備えた磁気記録再生装置。

【発明の詳細な説明】

【0001】

【発明の属する技術分野】本発明は、トンネル磁気抵抗効果膜を用いた磁界検出素子及びその製造方法とそれを用いた磁気ヘッド並びにこの磁気ヘッドを備えた磁気記録再生装置に関する。

【0002】

【従来の技術】現在実用化されている磁気ディスク装置において、磁気ディスクに記録された情報を再生するた

めに用いられる再生用磁気ヘッドには、例えばNi－Fe膜等に生じる異方性磁気抵抗効果（AMR）膜を用いた磁気ヘッド（以下、この種のヘッドをAMRヘッドという）が広く用いられている。

【0003】この磁気ヘッドの場合、磁気抵抗変化率は約2%である。さらに、最近、磁気特性の異なる二つの強磁性層で非磁性金属層を挟んだ構造の巨大磁気抵抗効果（GMR）膜を用いた磁気ヘッド（以下、この種のヘッドをGMRヘッドという）も実用化され始めた。

【0004】このGMRヘッドの磁気抵抗変化率は4～5%で、上述のAMRヘッドより高感度である。このため、より小さな磁区からの磁気情報を検出することが可能となり、1平方インチあたり10ギガビットの密度の記録も可能となる。しかしながら、今後、記録密度を大幅に向上させるには、さらに大きな磁気抵抗変化率を有する再生用磁気ヘッドが必要となる。

【0005】このような高い磁気抵抗変化率を有する磁気抵抗効果膜として、二つの強磁性層の間に絶縁層が挟まれた構造のトンネル接合を含むトンネル磁気抵抗効果膜が注目されている。この膜では、例えば、ジャーナル・オブ・マグネティズム・アンド・マグネティック・マテリアルズ第139巻、L231ページ（1995年発行）に示されたように、鉄の薄膜の間にアルミニウム酸化層が挟まれた構造のトンネル磁気抵抗効果膜において18%の磁気抵抗変化率が得られた等、大きな磁気抵抗変化率が報告されている。

【0006】このように、トンネル磁気抵抗効果膜は、大きな磁気抵抗変化率を生じるため、高感度の磁界検出素子として、特に磁気ヘッドの再生用ヘッドとして応用すれば有望であり、1平方インチ当たり40ギガビットなどの高密度記録再生への適用が期待される。

【0007】このトンネル磁気抵抗効果膜を高密度記録再生用磁気ヘッド（以下、トンネル磁気抵抗効果型磁気ヘッドという）に適用するには、トンネル接合部の寸法（詳しくは絶縁層が強磁性層と接触する面積）を1μm^2程度あるいはこれより小さくする必要がある。ここで、電気抵抗は、接合部の面積に比例するため、微小な接合部を形成した場合には非常に高く、一般に、前述のAMRヘッドの1千倍以上もの抵抗値を示す。

【0008】このため、トンネル磁気抵抗効果型磁気ヘッドでは現在広く用いられているAMRヘッド用駆動回路を用いることができず、また、熱雑音が大きいために信号対雑音比（S／N）が小さくなるという問題が明らかとなってきた。

【0009】すなわち、磁気抵抗変化率は高くとも、電気抵抗が高く、信号対雑音比（S／N）が小さいため、このままでは、高感度の磁界検出素子、特に磁気ディスクなどの高密度磁気記録媒体の再生用磁気ヘッドとして適用することは不可能である。

【0010】

【発明が解決しようとする課題】したがって、本発明の目的は、上記従来の問題を解消することにあり、トンネル磁気抵抗効果膜の高い磁気抵抗変化率を保持したまま、十分に低い電気抵抗値を有するトンネル磁気抵抗効果膜を用いた高感度の磁界検出素子及びその製造方法とこれを用いた磁気ヘッド並びにこの磁気ヘッドを備えた磁気記録再生装置を提供することにある。

【0011】

【課題を解決するための手段】トンネル磁気抵抗効果膜を用いた磁界検出素子や磁気ヘッド（以下、これらをトンネル磁気抵抗効果素子と称する）は、前述のAMR及びGMRの素子とは異なり、二つの強磁性金属層（以下、単に強磁性層と略称する）の間に薄い絶縁層が挟持された積層構造からなり、これら両強磁性層間に電極端子を介して一定の電圧を印加する構成を有するものである。すなわち、電圧を両強磁性層の積層膜面垂直方向に印加し、両強磁性層の磁化方向の間の角度が外部磁界によって互いに変化した時に膜面垂直方向に流れる電流、すなわち、薄い絶縁層を介して一方の電極から他方の電極に流れる電流（トンネル電流）が変化することを利用するものである。

【0012】トンネル磁気抵抗効果素子における抵抗値は、接合部寸法（絶縁層の面積、つまり絶縁層が強磁性層に接触する面積）の他、絶縁層固有の特性にも依存する。絶縁層は、電子が膜面垂直方向に進行する場合にポテンシャル障壁として働き、ポテンシャル障壁の高さと厚さにより抵抗値が決まる。

【0013】電気抵抗の観点からは、一般に、ポテンシャル障壁の高さを低く、厚さを薄くすることが低抵抗化の条件となる。しかし、磁気抵抗変化率に関しては、ポテンシャル障壁の高い方が、大きな値が得られる。このため、ポテンシャル障壁高さを調整しても、高い磁気抵抗変化率と低い抵抗値とを両立させることは困難である。このため、本発明においては、ポテンシャル障壁の高さは低下させず、障壁の厚さを大幅に減少することにより、大きな磁気抵抗変化率を保持しながら、抵抗値を減少させる方法を用いた。

【0014】ポテンシャル障壁の厚さを減少することは、絶縁層の厚さを減少することに対応し、スパッタ法などの成膜技術で絶縁体自体を強磁性層の上に被着した絶縁層を形成する場合には、被着層の厚さを減少することが必要となる。

【0015】しかし、絶縁体自体を強磁性層上に直接被着する方法で絶縁層の厚さを1．5nm程度より小にすると、絶縁層中にピンホールが生じ、トンネル効果を経ずに移動する電子が存在するため、磁気抵抗変化率が極めて小さくなってしまう。

【0016】このため、絶縁体自体を強磁性層上に直接被着する方法は適当ではなく、予めアルミニウムやマグネシウム等の金属膜を強磁性層の上に形成し、これを酸

化する等の反応により絶縁層を形成することが一般的である。

【0017】金属膜を酸化するこの方法により絶縁層を形成する場合、アルミニウムやマグネシウム等の金属膜が厚いと、この膜全体が反応して絶縁体になると絶縁層が厚くなるため適当ではない。絶縁層を薄くするためには、この金属層の表面近傍のみを部分的に反応させる必要があり、そのためには、酸素ガス圧を低くするなどの条件が必要となる。

【0018】しかし、このような条件では、絶縁層は薄くなっても、その中での反応が十分ではないために、未反応の金属元素の比率が高く、ポテンシャル障壁が低くなり、磁気抵抗変化率が低くなるという問題が生じた。

【0019】このように、絶縁層を形成する際にアルミニウムやマグネシウム等の金属膜が厚いと、反応の条件を選んでもポテンシャル障壁の高さを大とし、同時に厚さを小にするということが困難である。

【0020】一方、酸化などの反応により絶縁層となるアルミニウムやマグネシウム等の金属膜を単に薄くした場合には、この金属膜を通り越して反応が進み、これに隣接する強磁性層の一部にまで反応が及ぶ。強磁性物質としては、鉄、ニッケル、コバルト等の強磁性金属あるいはこれらの合金が通常用いられ、これらの強磁性物質も、反応すると絶縁層となる。このため、酸化などの反応により絶縁層となるアルミニウムやマグネシウム等の金属膜を単に薄くしても、実際には、強磁性金属の反応層も含めたものが絶縁層となるため、絶縁層全体としての厚さは大きなものとなる。

【0021】以上のように、アルミニウムやマグネシウム等の金属膜を強磁性層の上に形成し、これを酸化する等の反応により絶縁層を形成する場合、この金属膜の厚さによらず、ポテンシャル障壁の高さを大にし、かつ厚さを小にすることは困難である。すなわち、この方法では、高い磁気抵抗変化率と低い電気抵抗とを両立することが困難である。

【0022】本発明者等は、このような困難を克服するために種々実験検討した。その結果、強磁性層の上に、十分に薄い貴金属の層をまず形成し、その上に、酸化等の反応により絶縁層として用いるアルミニウムやマグネシウム等の金属膜を形成し、酸素雰囲気中での自然酸化、キュリー点を越えない範囲の加熱温度での熱酸化、さらには十分に強い反応条件で、酸素等と反応させて未反応の金属元素の残留率が数%以下の絶縁層とすることが可能であることを確認した。好ましい条件では、完全に金属膜を酸化して100%酸化物から構成される絶縁層とすることもできた。

【0023】この方法を用いると、アルミニウムやマグネシウム等の金属膜は十分に反応し、高いポテンシャル障壁を有する絶縁層が形成される。しかし、酸素等との反応は、下地となる貴金属層で停止するため、酸化反応する領域は、上記アルミニウムやマグネシウム等の金属膜のみに限られ、その下の強磁性層の反応は防止される。すなわち、貴金属層はその上に形成した金属膜を酸化して絶縁層とする際に、下地の強磁性層の酸化を防止するための保護層として機能する。

【0024】このため、アルミニウムやマグネシウム等の酸素と反応して絶縁層が形成される金属膜の厚さを十分薄くしておけば、絶縁層の厚さを十分薄くすることが可能となり、ポテンシャル障壁を薄くすることができる。

【0025】これまでの実験結果から判断すると、ポテンシャル障壁の厚さは3.0nm以下、好ましくは0.6〜0.9nm程度、高さは少なくとも1電子ボルト以上、望ましくは2〜3電子ボルト程度まで欲しいところである。3電子ボルトはなかなか得られ難いが、2.2電子ボルト程度であればアルミニウムの酸化物で容易に得られる。

【0026】ここで、ポテンシャル障壁の高さは、絶縁層において酸素等と反応していない金属元素の量に関係し、2電子ボルト以上のポテンシャル障壁高さは、未反応の金属元素の比率が6%以下であることに対応する。上述の膜構成とし、さらに、酸素ガス圧を高く酸化時間を長くするなど金属膜を十分に反応させる条件を用いることにより、このようなポテンシャル障壁に関する条件を満たすことが可能となり、高い磁気抵抗変化率と低い電気抵抗とを両立することが可能となる。

【0027】また、上記貴金属層の存在による影響は、これを十分に薄くしておけば、磁気抵抗変化率の低下は無視できる。貴金属層の好ましい厚さは、アルミニウムやマグネシウム等の金属膜を酸化して絶縁層を形成する際に、一方では強磁性層の酸化防止機能を考慮し、他方では金属膜が十分に酸化されて品質の良好な絶縁層が得られる条件を満たすものでなければならない。

【0028】本発明者等の実験検討によれば、貴金属層の好ましい膜厚の上限は、1.5nm程度、下限は0.24nm程度で少なくとも1原子層以上は必要であり、実用的に特に好ましい膜厚は0.4〜1.0nmである。

【0029】なお、貴金属層としては、Au，Pt，Pd，Rh，Ir及びRuの元素群から選択される少なくとも1種類の貴金属元素あるいはこれらの合金の層が適用される。

【0030】本発明は、以上説明したトンネル磁気抵抗効果素子に関する検討結果をもとになされたものであり、上記本発明の目的を達成することのできる発明の特徴を以下に具体的に説明する。

【0031】(1)先ず、本発明のトンネル磁気抵抗効果型磁界検出素子は、互いに磁化反転する磁界に差のある二つの強磁性金属層の間に絶縁層が存在してトンネル接合を形成するトンネル磁気抵抗効果素子と、前記二つ

の強磁性金属層間に電圧を印加する電極端子とを備えた磁界検出素子において、一方の強磁性金属層と絶縁層との間に、Au，Pt，Pd，Rh，Ir及びRuの貴金属元素群から選択される少なくとも1種類の元素もしくはこれらの元素の合金からなる貴金属層を設けたことを特徴とする。

【0032】上記貴金属層の厚さは1．5nm以下であることが望ましく、より好ましくは0．4〜1．0nmである。

【0033】また、上記絶縁層の厚さは3．0nm以下であることが望ましく、より好ましくは0．6〜0．9nmである。すなわち、絶縁層の厚さを強磁性膜に対する絶縁層のポテンシャル障壁の高さに表わすと、少なくとも1電子ボルト以上、望ましくは2〜3電子ボルト程度まで欲しいところである。3電子ボルトはなかなか得られ難いが、2．2電子ボルト程度であればアルミニウムの酸化物で容易に得られる。このような絶縁層を構成する代表的なものとして、アルミニウム及びマグネシウムの少なくとも1種の金属酸化物が挙げられる。

【0034】（2）このようなトンネル磁気抵抗効果型磁界検出素子を製造する発明の製造方法は、互いに磁化反転する磁界に差のある二つの強磁性金属層の間に絶縁層が存在してトンネル接合を形成するトンネル磁気抵抗効果素子と、前記二つの強磁性金属層間に電圧を印加する電極端子とを備えた磁界検出素子の製造方法において、前記いずれか一方の強磁性金属層上に絶縁層を形成する工程を、①前記強磁性金属層上に下地層として厚さ1．5nm以下のAu，Pt，Pd，Rh，Ir及びRuの貴金属元素群から選択される少なくとも1種類の元素もしくはこれらの元素の合金からなる貴金属層を形成する工程と、②前記貴金属層上に、酸化することによって容易に絶縁層となり、かつこの絶縁層の前記強磁性金属層に対するポテンシャル障壁の高さが少なくとも1電子ボルトである膜厚3nm以下の金属膜を形成し、前記貴金属層を前記強磁性金属層の酸化防止膜として保護しつつ前記金属膜を選択的に酸化して酸化物層に変換する絶縁層の形成工程とで構成したことを特徴とする。

【0035】上記貴金属層及び上記金属膜の形成は、真空蒸着法もしくはスパッタリング法で容易に形成することができる。また、前記金属膜を酸化して酸化物層に変換する絶縁層の形成工程は、酸素雰囲気中の自然酸化処理、熱酸化処理もしくはプラズマ酸化処理のいずれかの酸化処理工程とすることができる。

【0036】なかでも、プラズマ酸化処理は、他の処理法に比較して処理時間が短くても確実に金属膜を酸化でき、良好な絶縁層が得られ好ましい。この場合の好ましい条件として、例えば酸素ガス圧0．8〜2．5Torr、電力200〜500W、処理時間10秒〜3分が挙げられる。

【0037】（3）上記トンネル磁気抵抗効果型磁界検出素子を応用した本発明の磁気ヘッドは、互いに磁化反転する磁界に差のある二つの強磁性層の間に絶縁層が存在してトンネル接合を形成するトンネル磁気抵抗効果素子と、前記二つの強磁性層間に電圧を印加する電極端子を有する磁界検出素子と、前記電極端子を通して前記二つの強磁性層間に所定の電圧を印加する定電圧電源とを備えた磁気ヘッドにおいて、前記一方の強磁性層と絶縁層との間に、Au，Pt，Pd，Rh，Ir及びRuの貴金属元素群から選択される少なくとも1種類の元素もしくはこれらの元素の合金からなる貴金属層を設けると共に、前記貴金属層上に形成される前記絶縁層として、前記強磁性金属層に対するポテンシャル障壁の高さが少なくとも1電子ボルトである絶縁層を設けたことを特徴とする。

【0038】この磁気ヘッドは再生用磁気ヘッドであるが、これと周知の磁気誘導型磁気ヘッドとを組み合わせることにより容易に記録再生磁気ヘッドが実現できる。

【0039】（4）そして、この記録再生磁気ヘッドは、高密度記録再生を可能とするものであるため、高密度磁気記録媒体と組み合わせて、優れた磁気記録再生特性を有する磁気記録再生装置を実現することができる。

【0040】

【発明の実施の形態】図1は、本発明によるトンネル磁気抵抗効果素子の基本構造を模式的に示した断面図である。ここで、1はシリコン基板（100）で、2はこの上に設けた熱酸化膜（SiO_2）、3は第1の強磁性膜、4は貴金属層、5は絶縁層、6は第2の強磁性層、2′は保護膜となる絶縁体、7は、第1の強磁性膜3と第2の磁性層6との間に電圧を印加するためのAu電極である。

【0041】上記構造において、本発明の特徴は第1の強磁性膜3の上に貴金属層4を介して絶縁層5を設けた点にある。先ず、貴金属層4としては、Au，Pt，Pd，Rh，Ir及びRuの貴金属元素群から選択される少なくとも1種類の元素もしくはこれらの元素の合金からなる貴金属層が形成される。

【0042】貴金属層4の膜厚は、後述するように酸化処理を経る絶縁層5の形成工程時に、下地となる第1の強磁性膜3（磁性金属）に対し酸化防止効果を有する厚さであれば極力薄いことが望ましく、上限は1．5nm、下限は酸化防止効果のある最低の膜厚で1原子層以上の0．24nm程度であり、実用的には0．4〜1．0nmの膜厚が好ましい。

【0043】また、貴金属層4は、酸化防止効果のみならず、固有抵抗が小さいので電子スピンの情報を維持した状態でトンネル電流を流すことができ、結果として高い磁気抵抗変化率を維持しながら、トンネル磁気抵抗効果型磁気検出素子の電気抵抗低減に寄与している。

【0044】絶縁層5は、貴金属層4上に予め例えばAlやMg等の金属膜を形成しておき、これを表面から選

択的に酸化して形成したものである。すなわち、貴金属層4上に予め形成したAlやMg等の金属膜を表面から酸化した場合、この金属膜は選択的に酸化され、絶縁層が形成されるが、貴金属層4およびその下の第1の強磁性層3は酸化されないため、絶縁層の厚さは、AlやMg等の金属膜が酸化された領域に制限され、十分に薄い絶縁層5が設計通りの厚さで確実に形成される。

【0045】また、この金属膜の酸化においては貴金属層4の酸化防止効果で十分な酸化が可能なため、高いポテンシャル障壁が形成される。

【0046】この絶縁層4の厚さは、強磁性層に対するポテンシャル障壁の高さが少なくとも1電子ボルトである膜厚3nm以下、好ましくは0.6〜0.9nmである。

【0047】また、第1、第2の強磁性層3、6は、それぞれ互いに磁化反転する磁界に差のある磁性層からなり、第1の強磁性層3は、例えばCo−17at%Pt合金等のCo系（硬磁性層）、第2の強磁性層6は、例えばNi−20at%Fe合金等のNi−Fe系（軟磁性層）の磁性層を真空蒸着もしくはスパッタリングで形成する。これら両強磁性層3、6の磁気特性として、保磁力及び磁気異方性には、第1の磁性層3＞第2の磁性層6の関係が要求される。

【0048】電極7は、必ずしもAuである必要はないが、耐食性と良好な導電性を有するものであれば他の金属でもよい。

【0049】なお、第1の磁性膜3の下地に、Ni−O等の反強磁性層を形成し、強磁性層3に一方向の磁気異方性を与える構成としてもよい。

【0050】このトンネル磁気抵抗効果素子をトンネル磁気抵抗効果型磁界検出素子もしくは磁気ヘッドとするに際しては、第1、第2の強磁性層3、6に接続されたAu電極7を、定電圧源Eに接続して所定の電圧を印加すればよい。定電圧源Eとしては、直流電源が一般的であるが、交流もしくはパルス電源であってもよい。

【0051】このトンネル磁気抵抗効果素子は、金属膜の酸化処理による絶縁層の形成方法を除き、周知の成膜技術と周知のリソグラフィ技術によるパターン形成技術による製造方法によって容易に得ることができる。

【0052】

【実施例】以下、図面にしたがって本発明の実施例を具体的に説明する。

〈実施例1〉図1は、本発明の磁気抵抗効果型磁界検出素子及び磁気ヘッド素子の構造を示す断面図である。この図に示したように、SiO_2からなる厚さ400nmの熱酸化膜2を有するシリコン単結晶基板〔Si（100）〕1上に、先ず、第1の磁性層3として膜厚30nmのCo−17at%Pt層（硬磁性層）、貴金属層4として膜厚1.0nmのAu層、金属層5′として膜厚0.6nmのAl膜、を順次スパッタリングで形成した。

【0053】この状態で最上層のAl膜を、プラズマ酸化法で酸化して絶縁層5を形成した。ここで、酸素ガス圧は1mTorrとし、300Wの投入電力の下で1分間酸化した。

【0054】次いで、この絶縁層5上に第2の強磁性層6として膜厚15nmのNi−20at%Fe層（軟磁性層）を同じくスパッタリングで形成した。

【0055】こうして得られた積層体にフォトマスクを形成し、周知のリソグラフィ工程によって第1の磁性層3が露出し、これがわずかにエッチングされる深さまで加工し、凸状の所定パターンを形成する。

【0056】次いで、SiO_2からなる絶縁体2′をスパッタリングで形成し、さらに絶縁体2′にフォトマスクを形成し、周知のリソグラフィ工程によって電極形成のための穴あけ加工を行い、第1の磁性層3と第2の磁性層6とを露出させる。

【0057】最後に、電極材であるAu層を蒸着もしくはスパッタリングで形成し、選択エッチングにより所定の電極パターン7を形成することにより、図1に示した磁気抵抗効果型磁気ヘッド素子を形成した。

【0058】絶縁層5の両側の第1、第2の磁性層3および6の間には電極7を介して電圧が印加されている。この磁気ヘッド素子の電気抵抗は、ほとんど絶縁層5を電流がトンネルする時の抵抗であるため、絶縁層5のトンネル抵抗以外の電気抵抗による電圧降下は無視できる。したがって、電極間に与えた電圧は、第1及び第2の磁性層3および6の間に印加されている電圧Eに等しいと考えて良い。

【0059】上述の多層膜では、第1の磁性層3を構成するCo−17at%Pt合金層の保磁力は第2の磁性層より高いため、磁気記録媒体からの磁界が印加されても、Co−17at%Pt合金層（第1の磁性層3）の磁化の向きは変化しない。

【0060】これに対し、第2の磁性層6を構成するNi−20at%Fe合金層の保磁力は第1の磁性層3より低いため、磁気記録媒体からの磁界が印加されると、Ni−20at%Fe合金層（第2の磁性層6）の磁化の向きが回転する。

【0061】第2の磁性層6であるNi−20at%Fe合金層の磁化の変化により上記絶縁層5をトンネルする電流が変化し、そのトンネル電流の変化により外部磁界の変化を検出することができる。

【0062】磁気抵抗変化率は、第1の磁性層3と第2の磁性層6との磁化が平行の場合と反平行の場合との電気抵抗の差で表わされ、この素子の例では磁気抵抗変化率が22%であった。

【0063】また、第1の磁性層3と第2の磁性層6との間の電気抵抗は、Au層4を設けない比較例では100kΩμm^{-2}であったのに対し、本実施例では2.5k

Ωμm⁻²と1／40に激減した。信号対雑音比（S／N）は比較例の2倍強であった。

【0064】本実施例に示した磁気抵抗効果型磁界検出素子を磁気ヘッドとして使用する場合、再生ヘッド専用となり、記録能力がない。したがって、記録と再生を行うためには、周知の記録用誘導型磁気ヘッドと組み合わせて使用する必要がある。

【0065】〈実施例2〉図2は、トンネル磁気抵抗効果型磁界検出素子の断面図を模式的に示したものである。100nm厚の酸化層（不図示）付きのシリコン基板1上にイオンビームスパッタ法により図2に示す断面の基本構造を有するトンネル磁気抵抗効果型磁界検出素子を作製した。

【0066】基板1上に、反強磁性層8としてNiOを30nm厚で形成し、この上に、第1の強磁性層3として膜厚15nmのCo層を形成した。この上に、後述する絶縁層5を形成のための酸化過程において、酸化が第1の強磁性層3に及ぶことを防止するための貴金属層4として膜厚1.5nmのAu層を形成した。

【0067】この上に絶縁層5を形成するため、まず膜厚0.6nmのAl膜5′（不図示）を形成し、この状態で試料表面をプラズマ酸化法で酸化して絶縁層5を形成した。ここで、酸素ガス圧は1Torrとし、300Wの投入電力の下で1分間酸化した。

【0068】この上に、さらに、第2の強磁性層6として膜厚15nmのNi−Fe層を形成した。この後、トンネル磁気抵抗効果積層膜の2つの強磁性層3、6にそれぞれ電極端子7を取り付け両方の強磁性層の間に電圧を印加する構成として、トンネル磁気抵抗効果型磁界検出素子の磁気特性を測定した。

【0069】図3は、図2に示したトンネル磁気抵抗効果型磁界検出素子の電極端子7に直流電源Eを接続し、両方の強磁性層3、6の間に電圧（v）を印加し流れる電流を測定した結果である。

【0070】ここで、縦軸は電流値を接合部面積（強磁性層3、6に対する絶縁層5の接触面積）で除した電流密度として表示した。この曲線を解析した結果、ここで形成された絶縁層5の電子に対するポテンシャル障壁の高さは2.1電子ボルトで厚さは0.8nmであることが分かった。

【0071】この試料に磁界を印可し、これを変化させた場合、反強磁性層8と結合し磁化方向が変化しにくいCo層（第1の強磁性層3）の磁化方向は変化しないが、保持力および磁気異方性の小さいNi−Fe層（第2の強磁性層6）の磁化方向は容易に変化し、両方の強磁性層の磁化方向のなす角度が変化する。これにより、磁気抵抗変化が生じる。その結果、磁界の変化が電圧の変化として検出され、出力される。

【0072】この試料において、両方の強磁性層3、6の磁化が平行の場合と反平行の場合との電気抵抗の差、すなわち磁気抵抗変化率は22%であった。なお、前述の、絶縁層5における未反応の金属元素（ここではAl）比率は、この試料においては、1%以下であった。

【0073】また、第1の磁性層3と第2の磁性層6との間の電気抵抗は、Au層4を設けない比較例では100kΩμm⁻²であったのに対し、本実施例では2.5kΩμm⁻²と1／40に激減した。信号対雑音比（S／N）は比較例の2.2倍であった。

【0074】上記実施例においては、貴金属層4としてAu層を用いたが、その他の貴金属としてPt，Pd，Rh，Ir，Ruを用いても同様の効果が見られた。

【0075】これら貴金属層4の厚さを増加すると、一般に磁気抵抗変化率が減少する傾向が見られた。これは一方の強磁性層から他方の強磁性層へ偏極電子が進行する際に、貴金属層で電子スピンが散乱され、スピン偏極状態が乱されるためと考えられる。この貴金属層の膜厚依存性は貴金属の種類によって異なっているが、貴金属層厚が1.5nm以下であれば、いずれの貴金属においても上記スピン散乱による影響は無視できた。

【0076】また、本実施例の場合、第1の強磁性層3の磁界方向を一定方向に固定するため、下地として膜厚30nmのNiOからなる反強磁性層8を設けたが、この種のものとしては、その他Fe−Mn系合金、Mn−Ir系合金及びMn−Pt等のMnと貴金属との合金などが用いられる。膜厚は一般に5〜30nmが好ましい。なお、この反強磁性層8は実施例1の図1に示したように省略することもできる。

【0077】〈実施例3〉図4は、実施例2の第2の強磁性層6の下地に分極率が高い磁性層61を形成したトンネル磁気抵抗効果型磁界検出素子の断面図を模式的に示したものである。

【0078】磁気抵抗変化率は、絶縁層5のポテンシャル障壁の形状の他に第1、第2の強磁性層3、6の分極率にも関係し、分極率が高い方が磁気抵抗変化率が高い。実施例2では、一方の強磁性層（第2の強磁性層6）にNi−Feを用いたものであるが、本実施例においては、より高い磁気抵抗変化率を目指し、第2の強磁性層6であるNi−Fe層の下にも分極率の高いCo層61を設ける構成とした。

【0079】すなわち、図4に示すように、基板1上に膜厚30nmのNiOの反強磁性層8、第1の強磁性層である膜厚15nmのCoの強磁性層3を順に積層した上に膜厚1nmのRuの貴金属層4および膜厚0.7nmの絶縁層形成用のAl膜5′（不図示）を形成し、前述の条件でプラズマ酸化を行った。

【0080】この酸化過程で形成された絶縁層5の上に膜厚2nmのCo層61、および膜第2の強磁性層である厚15nmのNi−Fe層6を順に形成した。

【0081】ここで、分極率が高い磁性層であるCo層61の磁化と第2の強磁性層6であるNi−Fe層6の

磁化の方向は一致するので、外部磁界を変化させた場合に、この合体した強磁性層は、第1の強磁性層であるCo層3よりも磁化方向が変化し易い。

【0082】このため、印加磁界を変化することにより、両方の強磁性層3、6の磁化方向に角度差が生じ磁気抵抗変化が生じ、磁界検出素子として印加磁界の変化に基づく出力が電圧の変化として得られる。ここでは、絶縁層5の膜厚は0.89nmであり、磁気抵抗変化率は28%であった。また、この試料においても、前述の、絶縁層における未反応の金属元素比率（ここではAl）は、1%以下であった。

【0083】また、第1の磁性層3と第2の磁性層6との間の電気抵抗は、Ru層4を設けない比較例では100kΩμm^{-2}であったのに対し、本実施例では8kΩμm^{-2}と1/13に激減した。信号対雑音比（S/N）は比較例の2.1倍であった。

【0084】なお、貴金属層4としてRu層を用いたが、その他の貴金属としてAu，Pt，Pd，Rh，Irを用いても同様の効果が見られた。

【0085】また、ここでは絶縁層5としてAl膜を酸化した酸化アルミニウム（Al_2O_3）層を用いたが、Mg膜を酸化した酸化マグネシウム（MgO）層、さらにはAlとMgの合金膜を酸化した絶縁層であっても、上記酸化アルミニウム層の場合とほぼ同様の結果が得られた。

【0086】〈実施例4〉図5は、基本的には実施例1のトンネル磁気抵抗効果型磁界検出素子と同一構造であるが、第2の磁性層6と絶縁層5との間に実施例3と同様の分極率が高い磁性層であるCo層61（膜厚2nm）を介挿した。強磁性層に対する絶縁層5の接触面積は1.5μm×1.5μmである。この再生用磁気ヘッドの抵抗値は1.4kΩであり、これに基づく熱雑音は、磁気抵抗変化率との関係から問題とならないことが確認できた。

【0087】〈実施例5〉実施例1～4で述べた本発明の磁気抵抗効果型磁気ヘッドを用いて磁気ディスク装置を作製した。装置の構造の要部を65に示す。図6（a）は平面図であり、図6（b）は図6（a）のA－A′断面図である。

【0088】磁気記録媒体駆動部52により回転する磁気記録媒体51には、Co－Cr系合金からなる磁性材料を用いた。磁気ヘッド駆動部54により保持された磁気ヘッド53のトラック幅は1μmとした。この磁気ヘッド53の再生部には実施例1～4で示した本発明の磁気抵抗効果型磁気ヘッドが搭載されている。

【0089】本発明の磁気抵抗効果型磁気ヘッドを用いた磁気記録再生装置では、高い出力の再生信号が観測された。これは、本発明で用いた多層膜の磁気抵抗変化量が大きいためである。また、ノイズも比較的小さかった。これは、本発明の磁気抵抗効果型ヘッドのS/Nが20以上であるためである。

【0090】

【発明の効果】以上説明したように、本発明により所期の目的を達成することができた。すなわち、本発明のトンネル磁気抵抗効果型磁界検出素子は、高い磁気抵抗変化率を維持しながら、電気抵抗が低く、かつ高いS/N特性が得られるので、高感度の磁界検出素子の実現を可能とする。特に電気抵抗が低いため、これを磁気ヘッドに適用すれば、従来の磁気ヘッドの駆動回路が使用できるため容易に高記録密度に対応した磁気ヘッドが実現できる。したがって、高記録密度の磁気記録再生装置が得られ、産業の発展に貢献できるところ多大である。

【図面の簡単な説明】

【図1】本発明のトンネル磁気抵抗効果型磁界検出素子の基本構造を模式的に示した断面図。

【図2】本発明の一実施例となるトンネル磁気抵抗効果型磁界検出素子を模式的に示した断面図。

【図3】本発明の一実施例となる磁界検出素子における電流密度と電圧の関係を示すグラフ。

【図4】本発明の他の実施例となるトンネル磁気抵抗効果型磁界検出素子を模式的に示した断面図。

【図5】本発明の一実施例となる再生用磁気ヘッドの断面図。

【図6】本発明の磁気ディスク装置の要部構造を模式的に示した説明図。

【符号の説明】

1…基板、
2…熱酸化層、
2′…絶縁体（SiO_2）、
3…第1の強磁性層、
4…貴金属層、
5…絶縁層、
6…第2の強磁性層、
61…分極率の高い磁性層、
7…電極、
8…反強磁性層、
E…定電圧電源。

【図1】

図 1

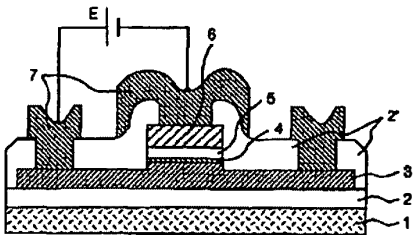

1…基板　2…絶縁化層　2'…絶縁体（SiO_2）
3…第1の強磁性層　4…貴金属層　5…絶縁層
6…第2の強磁性層　61…分極率の高い磁性層
7…電極　8…反強磁性層　E…定電圧電源

【図2】

図 2

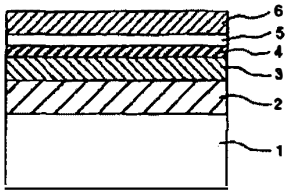

【図3】

図 3

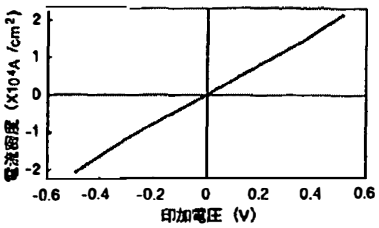

【図4】

図 4

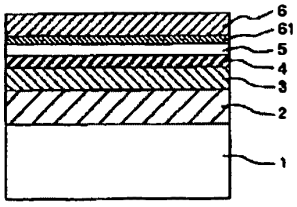

【図5】

図 5

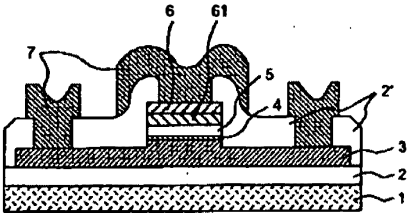

【図6】

図6

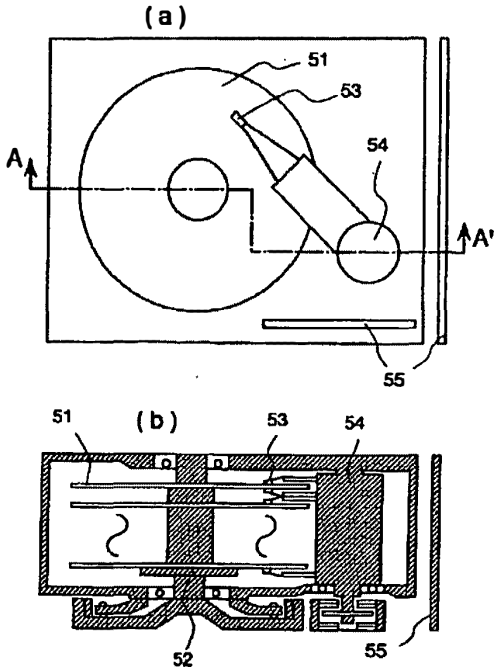

フロントページの続き

(72)発明者　清水　昇
東京都国分寺市東恋ケ窪一丁目280番地
株式会社日立製作所中央研究所内

Fターム(参考)　5D034 BA03 BA15 BA17 BA18 BA21
CA04 DA07

OIPE JC54
APR 0 5 2004
PATENT & TRADEMARK OFFICE

PATENT

IN THE UNITED STATES PATENT AND TRADEMARK OFFICE

In re application of:	:	March 31, 2004
S. Parkin	:	Group Art Unit: 1762
Serial No.: 10/646,246	:	Examiner: Unknown
Filed: August 22, 2003	:	San Jose, California

Title: MgO Tunnel Barriers and Method of Formation

SECOND PRELIMINARY AMENDMENT

Commissioner for Patents
P.O. Box 1450
Alexandria, Virginia 22313-1450

Dear Sir:

Please amend the above-identified application as specified herein.

04/07/2004 JBALINAN 00000053 090441 10646246
01 FC:1202 36.00 DA

OIPE JC55
APR 0 5 2004
PATENT & TRADEMARK OFFICE

PTO/SB/21 (08-00)
Approved for use through 10/31/2002. OMB 0651-0031
U.S. Patent and Trademark Office: U.S. DEPARTMENT OF COMMERCE
Under the Paperwork Reduction Act of 1995, no persons are required to respond to a collection of information unless it displays a valid OMB control number.

TRANSMITTAL FORM

(to be used for all correspondence after initial filing)

Application Number	10/646,246
Filing Date	08/22/2003
First Named Inventor	S. Parkin
Group Art Unit	2652
Examiner Name	Unknown
Total Number of Pages in This Submission	25
Attorney Docket Number	ARC920030057US1

ENCLOSURES *(check all that apply)*

- [x] Fee Transmittal Form
  - [x] Fee Attached
- [x] Amendment / Reply **2nd Preliminary**
  - [ ] After Final
  - [ ] Affidavits/declaration(s)
- [ ] Extension of Time Request
- [ ] Express Abandonment Request
- [ ] Information Disclosure Statement
- [ ] Certified Copy of Priority Document(s)
- [ ] Response to Missing Parts/ Incomplete Application
  - [ ] Response to Missing Parts under 37 CFR 1.52 or 1.53
- [ ] Assignment Papers *(for an Application)*
- [ ] Drawing(s)
- [ ] Licensing-related Papers
- [ ] Petition
- [ ] Petition to Convert to a Provisional Application
- [ ] Power of Attorney, Revocation Change of Correspondence Address
- [ ] Terminal Disclaimer
- [ ] Request for Refund
- [ ] CD, Number of CD(s) _____
- [ ] After Allowance Communication to Group
- [ ] Appeal Communication to Board of Appeals and Interferences
- [ ] Appeal Communication to Group *(Appeal Notice, Brief, Reply Brief)*
- [ ] Proprietary Information
- [ ] Status Letter
- [ ] Other Enclosure(s) *(please identify below)*:

Remarks

SIGNATURE OF APPLICANT, ATTORNEY, OR AGENT

Firm or Individual name	Daniel E. Johnson
Signature	Daniel E Johnson
Date	03/31/2004

CERTIFICATE OF MAILING

I hereby certify that this correspondence is being deposited with the United States Postal Service with with sufficent postage as first class mail in an envelope addressed to: Commissioner for Patents, P.O.Box 1450, Alexandria, VA 22313-1450 on this date: 03/31/04

Typed or printed name	Cheryl G. Ruby		
Signature	Cheryl G Ruby	Date	03/31/2004

Burden Hour Statement: This form is estimated to take 0.2 hours to complete. Time will vary depending upon the needs of the individual case. Any comments on the amount of time you are required to complete this form should be sent to the Chief Information Officer, U.S. Patent and Trademark Office, Washington, DC 20231. DO NOT SEND FEES OR COMPLETED FORMS TO THIS ADDRESS. SEND TO: Assistant Commissioner for Patents, Washington, DC 20231.

OIPE JCSS
APR 0 5 2004
PATENT & TRADEMARK OFFICE

PTO/SB/17 (10-01)
Approved for use through 10/31/2002. OMB 0651-0032
U.S. Patent and Trademark Office; U.S. DEPARTMENT OF COMMERCE
Under the Paperwork Reduction Act of 1995, no persons are required to respond to a collection of information unless it displays a valid OMB control number.

FEE TRANSMITTAL for FY 2002

Patent fees are subject to annual revision.

TOTAL AMOUNT OF PAYMENT ($) 36.00

Complete if Known	
Application Number	10/646,246
Filing Date	08/22/2003
First Named Inventor	S. Parkin
Examiner Name	Unknown
Group Art Unit	2652
Attorney Docket No.	ARC920030057US1

METHOD OF PAYMENT

1. ☑ The Commissioner is hereby authorized to charge indicated fees and credit any overpayments to:

Deposit Account Number: 09-0441

Deposit Account Name: IBM CORPORATION

☑ Charge Any Additional Fee Required Under 37 CFR 1.16 and 1.17

☐ Applicant claims small entity status. See 37 CFR 1.27

2. ☐ **Payment Enclosed:**

☐ Check ☐ Credit card ☐ Money Order ☐ Other

FEE CALCULATION

1. BASIC FILING FEE

Large Entity Fee Code	Large Entity Fee ($)	Small Entity Fee Code	Small Entity Fee ($)	Fee Description	Fee Paid
101	740	201	370	Utility filing fee	
106	330	206	165	Design filing fee	
107	510	207	255	Plant filing fee	
108	740	208	370	Reissue filing fee	
114	160	214	80	Provisional filing fee	

SUBTOTAL (1) ($) 0.00

2. EXTRA CLAIM FEES

	Extra Claims		Fee from below		Fee Paid
Total Claims		-20** = 2	x 18.00	=	36.00
Independent Claims		- 3** =	x 84.00	=	0.00
Multiple Dependent				=	

Large Entity Fee Code	Large Entity Fee ($)	Small Entity Fee Code	Small Entity Fee ($)	Fee Description
103	18	203	9	Claims in excess of 20
102	84	202	42	Independent claims in excess of 3
104	280	204	140	Multiple dependent claim, if not paid
109	84	209	42	** Reissue independent claims over original patent
110	18	210	9	** Reissue claims in excess of 20 and over original patent

SUBTOTAL (2) ($) 36.00

**or number previously paid, if greater; For Reissues, see above*

FEE CALCULATION (continued)

3. ADDITIONAL FEES

Large Entity Fee Code	Large Entity Fee ($)	Small Entity Fee Code	Small Entity Fee ($)	Fee Description	Fee Paid
105	130	205	65	Surcharge - late filing fee or oath	
127	50	227	25	Surcharge - late provisional filing fee or cover sheet	
139	130	139	130	Non-English specification	
147	2,520	147	2,520	For filing a request for ex *parte* reexamination	
112	920*	112	920*	Requesting publication of SIR prior to Examiner action	
113	1,840*	113	1,840*	Requesting publication of SIR after Examiner action	
115	110	215	55	Extension for reply within first month	
116	400	216	200	Extension for reply within second month	
117	920	217	460	Extension for reply within third month	
118	1,440	218	720	Extension for reply within fourth month	
128	1,960	228	980	Extension for reply within fifth month	
119	320	219	160	Notice of Appeal	
120	320	220	160	Filing a brief in support of an appeal	
121	280	221	140	Request for oral hearing	
138	1,510	138	1,510	Petition to institute a public use proceeding	
140	110	240	55	Petition to revive - unavoidable	
141	1,280	241	640	Petition to revive - unintentional	
142	1,280	242	640	Utility issue fee (or reissue)	
143	460	243	230	Design issue fee	
144	620	244	310	Plant issue fee	
122	130	122	130	Petitions to the Commissioner	
123	50	123	50	Processing fee under 37 CFR 1.17(q)	
126	180	126	180	Submission of Information Disclosure Stmt	
581	40	581	40	Recording each patent assignment per property (times number of properties)	
146	740	246	370	Filing a submission after final rejection (37 CFR § 1.129(a))	
149	740	249	370	For each additional invention to be examined (37 CFR § 1.129(b))	
179	740	279	370	Request for Continued Examination (RCE)	
169	900	169	900	Request for expedited examination of a design application	

Other fee (specify) _____

*Reduced by Basic Filing Fee Paid

SUBTOTAL (3) ($) 0.00

SUBMITTED BY				Complete (if applicable)	
Name (Print/Type)	Daniel E. Johnson	Registration No. (Attorney/Agent)	37,033	Telephone	408-927-3367
Signature	Daniel E. Johnson			Date	03/31/2004

WARNING: Information on this form may become public. Credit card information should not be included on this form. Provide credit card information and authorization on PTO-2038.

Burden Hour Statement: This form is estimated to take 0.2 hours to complete. Time will vary depending upon the needs of the individual case. Any comments on the amount of time you are required to complete this form should be sent to the Chief Information Officer, U.S. Patent and Trademark Office, Washington, DC 20231. DO NOT SEND FEES OR COMPLETED FORMS TO THIS ADDRESS. SEND TO: Assistant Commissioner for Patents, Washington, DC 20231.

Amendments to the Specification:

Please amend the paragraph beginning on page 10, line 20 as follows:

Popova et al. (E. Popova, J. Faure-Vincent, C. Tiusan, et al., Appl. Phys. Lett. **81**, 1035 (2002)) have published results on epitaxial 100 oriented Fe/MgO/Fe/Co MTJs deposited by MBE on MgO(100) substrates. This group prepared the Fe layers by evaporation from a Knudsen cell and the Co and MgO layers by electron beam evaporation. The first Fe layer was deposited at room temperature and then annealed at 450 °C after deposition and prior to deposition of the MgO barrier. This group reported modest values of TMR at room temperature of only ~15% for junctions with 10 Å thick MgO barriers, although the crystalline quality of the structures was very good with smooth and epitaxial Fe and MgO layers. This same group has recently published data on similar structures with thicker tunnel barriers (25 Å thick) in which TMR values of up to 67% were found at room temperature (J. Faure-Vincent, C. Tiusan, E. Jouguelet, et al., Appl. Phys. Lett. **82**, 4507 (2003)). They argue that thick MgO tunnel barriers are needed to obtain these higher TMR values, even though the TMR they find is not significantly higher than that which has been observed in MTJs with Al_2O_3 tunnel barriers. Popova et al. also suggest that the modest TMR values they find, especially when compared to the theoretical predictions of Butler et al., may result from the formation of an FeO layer at the Fe/MgO interface during the deposition of MgO on the lower Fe electrode. The formation of an FeO layer was previously postulated by Meyerheim et al. (H. L. Meyerheim, R. Popescu, J. Kirschner, et al., Phys. Rev. Lett. **87**, 076102 (2001)), who found evidence for a such a layer

from detailed structural investigations using surface x-ray diffraction of the growth of MgO on single crystal Fe(001) substrates. Recently, X.-G. Zhang, W. H. Butler, and A. Bandyopadhyay (Phys. Rev. B **68**, 092402 (2003)) have carried out calculations of the TMR for Fe/FeO/MgO/Fe junctions and have found that the presence of an FeO layer substantially reduces the predicted TMR values for this system.

Please amend the paragraph beginning on page 18, line 3 as follows:

In another preferred embodiment, the overlayer and the underlayer include respective ferromagnetic materials that together with the MgO tunnel ~~junction~~ barrier form a magnetic tunnel junction, in which i) the amount of any oxide separating the MgO tunnel barrier from the ferromagnetic materials is sufficiently low, and ii) the MgO tunnel barrier, the underlayer, and the overlayer are sufficiently free of defects, that the room temperature tunnel magnetoresistance of the magnetic tunnel junction is greater than 70% (more preferably greater than 100%, and still more preferably greater than 160%). At least one of the underlayer and the overlayer may include antiferromagnetic material that is exchange biased with the ferromagnetic material of that layer, in which the antiferromagnetic material includes at least one alloy selected from the group consisting of Ir-Mn and Pt-Mn, with the alloy being substantially (100) oriented and fcc or slightly distorted fcc. The underlayer may include antiferromagnetic material over (e.g., in contact with) at least one layer selected from the group consisting of Ta and TaN.

Amendments to the Claims:

1. (Original) A method, comprising:

depositing Mg onto a surface of an underlayer to form a Mg layer thereon, wherein the surface is selected to be substantially free of oxide; and

directing additional Mg, in the presence of oxygen, towards the Mg layer to form a MgO tunnel barrier in contact with the underlayer, the oxygen reacting with the additional Mg and the Mg layer.

2. (Original) The method of Claim 1, wherein the thickness of the Mg layer is selected to be large enough to prevent oxidation of the underlayer but small enough that, upon reaction of the oxygen with the Mg layer, substantially all the Mg in the Mg layer is converted into MgO.

3. (Original) The method of Claim 1, further comprising annealing the MgO tunnel barrier to improve its performance.

4. (Original) The method of Claim 1, wherein the Mg layer is deposited in the absence of substantial amounts of reactive oxygen, the Mg layer being oxidized as the MgO tunnel barrier is formed.

5. (Original) The method of Claim 1, further comprising providing a source of MgO that acts as a source of both oxygen and the additional Mg.

6. (Original) The method of Claim 1, wherein the oxygen includes ionized oxygen.

7. (Original) The method of Claim 1, wherein the oxygen includes atomic oxygen.

8. (Original) The method of Claim 1, wherein oxygen is provided by a rare gas-oxygen plasma.

9. (Original) The method of Claim 8, wherein the rare gas includes argon.

10. (Original) The method of Claim 1, wherein the MgO tunnel barrier has a thickness of between 3 and 50 angstroms.

11. (Original) The method of Claim 1, wherein the additional Mg is provided by at least one of the following techniques: reactive sputtering, ion-beam sputtering, evaporation, pulsed laser deposition, and molecular beam epitaxy.

12. (Original) The method of Claim 1, wherein the Mg layer has a thickness of between 3 and 20 angstroms.

13. (Original) The method of Claim 1, wherein the Mg layer has a thickness of between 4 and 8 angstroms.

14. (Original) The method of Claim 1, wherein the underlayer includes a semiconductor.

15. (Original) The method of Claim 14, wherein the semiconductor is in direct contact with the MgO tunnel barrier.

16. (Original) The method of Claim 14, wherein the underlayer includes GaAs.

17. (Original) The method of Claim 1, wherein the underlayer includes a ferrimagnetic material.

18. (Original) The method of Claim 17, wherein the ferrimagnetic material is in direct contact with the MgO tunnel barrier.

19. (Original) The method of Claim 1, further comprising forming an overlayer on the MgO tunnel barrier, wherein the overlayer includes a ferrimagnetic material.

20. (Original) The method of Claim 1, wherein the underlayer includes a ferromagnetic material.

21. (Original) The method of Claim 20, wherein the ferromagnetic material is in direct contact with the MgO tunnel barrier.

22. (Original) The method of Claim 20, wherein the ferromagnetic material includes Fe.

23. (Original) The method of Claim 22, wherein the ferromagnetic material is bcc and substantially (100) oriented.

24. (Original) The method of Claim 20, wherein the ferromagnetic material includes an alloy of Fe and Co and the Fe content of the alloy is between 1 and 99 atomic %.

25. (Original) The method of Claim 24, wherein the alloy is bcc and substantially (100) oriented.

26. (Original) The method of Claim 20, further comprising forming an overlayer on the MgO tunnel barrier to form a magnetic tunnel junction, wherein the overlayer includes a ferromagnetic material.

27. (Currently amended) The method of Claim 26, wherein the oxygen ~~content~~ concentration is selected to increase the magnetoresistance of the magnetic tunnel junction.

28. (Original) The method of Claim 26, further comprising annealing the tunnel junction to increase its tunnel magnetoresistance.

29. (Original) The method of Claim 28, wherein the tunnel junction is annealed at a temperature selected to yield a tunnel magnetoresistance of greater than 100% at room temperature.

30. (Original) The method of Claim 28, wherein the tunnel junction is annealed at a temperature selected to yield a tunnel magnetoresistance of greater than 160% at room temperature.

31. (Currently amended) The method of Claim 26, wherein the overlayer and the underlayer include respective ferromagnetic materials selected from the group consisting of i) Fe, ii) an alloy of Co and Fe, iii) an alloy of Ni and Fe, and iv) an alloy of Ni and Fe and Co.

32. (Original) The method of Claim 26, wherein the ferromagnetic materials are an alloy of Co and Fe, and the Fe content of the alloy is 10-20 atomic %.

33. (Original) The method of Claim 26, wherein the ferromagnetic material of the underlayer is bcc and is substantially (100) oriented.

34. (Original) The method of Claim 26, wherein the ferromagnetic material of the underlayer, the ferromagnetic material of the overlayer, and the MgO tunnel barrier are substantially (100) oriented.

35. (Original) The method of Claim 26, wherein at least one of the underlayer and the overlayer includes antiferromagnetic material that is exchange biased with the ferromagnetic material of said at least one layer, the antiferromagnetic material including at least one alloy selected from the group consisting of Ir-Mn and Pt-Mn, in which the alloy is substantially (100) oriented and is either fcc or slightly distorted fcc.

36. (Original) The method of Claim 26, wherein the underlayer includes antiferromagnetic material over at least one layer selected from the group consisting of Ta and TaN.

37. (Original) The method of Claim 26, wherein the MgO tunnel barrier is in direct contact with both the ferromagnetic material of the underlayer and the ferromagnetic material of the overlayer.

38. (Original) The method of Claim 1, comprising forming an overlayer on the MgO tunnel barrier, wherein one of the overlayer and the underlayer includes a non-ferromagnetic, non-

ferrimagnetic metal layer, and the other of the overlayer and the underlayer includes a ferrimagnetic layer.

39. (Original) The method of Claim 1, comprising forming an overlayer on the MgO tunnel barrier, wherein one of the overlayer and the underlayer includes a non-ferromagnetic, non-ferrimagnetic metal layer, and the other of the overlayer and the underlayer includes a ferromagnetic layer.

40. (Original) The method of Claim 39, comprising constructing a magnetic tunneling transistor that includes the non-ferromagnetic, non-ferrimagnetic metal layer, the MgO tunnel barrier, and the ferromagnetic layer.

41. (Original) The method of Claim 39, wherein the non-ferromagnetic, non-ferrimagnetic metal layer includes a metal selected from the group consisting of Cu, W, Al, AlN, Nb, NbN, WTi, Ti, TiN, Ta, and TaN.

42. (Original) The method of Claim 39, wherein the ferromagnetic layer includes a ferromagnetic material selected from the group consisting of i) Fe, ii) an alloy of Co and Fe, iii) an alloy of Ni and Fe, and iv) an alloy of Ni and Fe and Co.

43. (Original) The method of Claim 39, wherein the ferromagnetic material and the MgO tunnel barrier are substantially (100) oriented, and the ferromagnetic material is bcc.

44. (Original) The method of Claim 1, comprising forming an overlayer on the MgO tunnel barrier, wherein the overlayer and the underlayer comprise respective non-ferromagnetic, non-ferrimagnetic metals.

45. (Original) The method of Claim 44, wherein the metals are selected from the group consisting of Cu, Al, AlN, W, Nb, NbN, Pt, Pd, Ir, RuO_2, Ru, and IrO_2.

46. (Original) A method, comprising:

constructing a magnetic tunnel junction that includes a MgO tunnel barrier, wherein the MgO tunnel barrier is formed by depositing Mg, in the presence of oxygen, onto a Mg layer substantially free of oxide.

47. (Original) The method of Claim 46, wherein oxygen is provided by a rare gas-oxygen plasma.

48. (Original) The method of Claim 46, wherein the Mg layer has a thickness of between 3 and 20 angstroms.

49. (Original) The method of Claim 46, further comprising annealing the magnetic tunnel junction to increase its magnetoresistance.

50. (Original) The method of Claim 49, wherein the tunnel junction is annealed at a temperature selected to yield a tunnel magnetoresistance of greater than 100% at room temperature.

51. (Original) The method of Claim 49, wherein the tunnel junction is annealed at a temperature selected to yield a tunnel magnetoresistance of greater than 160% at room temperature.

52. (Original) A method, comprising:

forming a layer of Mg;

providing an oxidizing atmosphere;

depositing Mg, in the presence of the oxidizing atmosphere, onto the Mg layer to form a MgO tunnel barrier.

53. (Original) The method of Claim 52, wherein the Mg layer is formed on a ferrimagnetic layer.

54. (Original) The method of Claim 52, wherein the Mg layer is formed on a ferromagnetic layer, the method further comprising forming a ferromagnetic layer on the MgO tunnel barrier to construct a magnetic tunnel junction.

55. (Original) The method of Claim 52, further comprising annealing the MgO tunnel barrier to improve its performance.

56. (Currently amended) A method, comprising:

providing an underlayer having a surface that is substantially free of oxide;

forming a metal layer on the surface to both protect the underlayer from oxidation and to wet the underlayer; and

directing Mg and oxygen onto the metal layer to form a MgO tunnel barrier that is <u>in</u> contact with the underlayer.

57. (Original) The method of Claim 56, wherein the underlayer includes at least one material selected from the group consisting of ferrimagnetic materials and ferromagnetic materials.

58. (Original) The method of Claim 56, wherein the metal layer includes Mg.

59. (Original) The method of Claim 56, further comprising annealing the MgO tunnel barrier to improve its performance.

60. (Original) A method, comprising:

forming a Mg layer of a preselected thickness on a surface of an underlayer to protect the underlayer from oxidation; and

directing oxygen and additional Mg towards the Mg layer so that the oxygen reacts with the Mg layer and the additional Mg to form a MgO tunnel barrier on the underlayer,

wherein the thickness of the Mg layer is selected to be small enough that substantially all the Mg of the Mg layer reacts with oxygen to form MgO.

61. (Original) The method of Claim 60, wherein the surface is selected to be substantially free of oxide.

62. (Original) The method of Claim 60, further comprising forming an overlayer on the MgO tunnel barrier, wherein the overlayer and the underlayer each include ferromagnetic material, thereby forming a magnetic tunnel junction.

63. (Original) The method of Claim 60, further comprising forming an overlayer on the MgO tunnel barrier, wherein the overlayer and the underlayer each include at least one material selected from the group consisting of ferromagnetic materials and ferrimagnetic materials, thereby forming a magnetic tunnel junction.

64. (Original) The method of Claim 63, further comprising annealing the magnetic tunnel junction to increase its tunnel magnetoresistance.

65. (Original) A structure, comprising:

an underlayer having a surface that is substantially free of oxide formed from the underlayer;

a MgO tunnel barrier in contact with the surface of the underlayer; and

an overlayer, the MgO tunnel barrier being in contact with a surface of the overlayer, the MgO tunnel barrier being sandwiched between the underlayer and the overlayer.

66. (Original) The structure of Claim 65, wherein the surface of the overlayer is substantially free of oxide formed from the overlayer.

67. (Original) The structure of Claim 65, wherein at least one of the overlayer and the underlayer includes a spacer layer that is in contact with the MgO tunnel barrier, wherein the spacer layer does not substantially interfere with the tunneling properties of the MgO tunnel barrier.

68. (Original) The structure of Claim 65, wherein the MgO tunnel barrier has a thickness of between 3 and 50 angstroms.

69. (Original) The structure of Claim 65, wherein at least one of the underlayer and the overlayer includes a ferrimagnetic material.

70. (Currently amended) The structure of Claim 65, wherein the overlayer and the underlayer include respective ferromagnetic materials that together with the MgO tunnel junction form a magnetic tunnel ~~junction~~ barrier, and wherein:

i) the amount of any oxide separating the MgO tunnel barrier from the ferromagnetic materials is sufficiently low, and

ii) the MgO tunnel barrier, the underlayer, and the overlayer are sufficiently free of defects, that the tunnel magnetoresistance of the magnetic tunnel junction is greater than 70% at room temperature.

71. (Original) The structure of Claim 70, wherein

i) the amount of any oxide separating the MgO tunnel barrier from the ferromagnetic materials is sufficiently low, and

ii) the MgO tunnel barrier, the underlayer, and the overlayer are sufficiently free of defects, that the tunnel magnetoresistance of the magnetic tunnel junction is greater than 100% at room temperature.

72. (Original) The structure of Claim 70, wherein

i) the amount of any oxide separating the MgO tunnel barrier from the ferromagnetic materials is sufficiently low, and

ii) the MgO tunnel barrier, the underlayer, and the overlayer are sufficiently free of defects, that the tunnel magnetoresistance of the magnetic tunnel junction is greater than 160% at room temperature.

73. (Original) The structure of Claim 70, wherein at least one of the underlayer and the overlayer includes antiferromagnetic material that is exchange biased with the ferromagnetic material of said at least one layer, the antiferromagnetic material including at least one alloy selected from the group consisting of Ir-Mn and Pt-Mn, in which the alloy is substantially (100) oriented and is either fcc or slightly distorted fcc.

74. (Original) The structure of Claim 70, wherein the underlayer includes antiferromagnetic material over at least one layer selected from the group consisting of Ta and TaN.

75. (Original) The structure of Claim 70, wherein the MgO tunnel barrier is in direct contact with the both the ferromagnetic material of the underlayer and the ferromagnetic material of the overlayer.

76. (Original) The structure of Claim 70, wherein the MgO tunnel barrier has a thickness of between 3 and 50 angstroms.

77. (Original) The structure of Claim 65, wherein the underlayer and the overlayer include respective non-ferromagnetic, non-ferrimagnetic metals.

78. (Original) The structure of Claim 65, wherein one of the underlayer and the overlayer includes a layer of ferromagnetic material, and the other of the underlayer and the overlayer includes a layer of non-ferromagnetic, non-ferrimagnetic metal.

79. (Original) The structure of Claim 78, wherein:

i) the amount of any oxide separating the MgO tunnel barrier from the underlayer and the overlayer is sufficiently low, and

ii) the MgO tunnel barrier, the underlayer, and the overlayer are sufficiently free of defects, that the spin polarization of tunneling current passing through the structure is greater than 50%.

80. (Currently amended) The structure of Claim 78, wherein

i) the amount of any oxide separating the MgO tunnel barrier from the underlayer and the overlayer is sufficiently low, and

ii) the MgO tunnel barrier, the underlayer, and the overlayer are sufficiently free of defects, that the spin polarization of tunneling current passing through the structure is greater than 70%.

81. (Currently amended) The ~~method~~ structure of Claim 78, wherein the ferromagnetic material is in direct contact with the MgO tunnel barrier.

82. (New) The structure of Claim 65, wherein the underlayer includes ferromagnetic material that is bcc and substantially (100) oriented.

83. (New) The structure of Claim 82, wherein the overlayer includes ferromagnetic material.

REMARKS

With this amendment, Applicant wishes to make minor changes in wording in Claims 27, 31, 56, 70, 80 and 81.

Claims 82 and 83 have been added to better claim the subject matter Applicant regards as his invention.

In addition, the specification has been amended to provide the complete citation of one reference and to make a minor change in wording in the summary.

Respectfully submitted,

S. Parkin

Daniel E. Johnson (Reg. No. 37,033)
Agent for Applicant
Phone (408) 927-3367

ARC920030057US1.am2.doc

PATENT APPLICATION FEE DETERMINATION RECORD
Effective January 1, 2003

Application or Docket Number: 6646246

CLAIMS AS FILED - PART I

	(Column 1)	(Column 2)
TOTAL CLAIMS	81	
FOR	NUMBER FILED	NUMBER EXTRA
TOTAL CHARGEABLE CLAIMS	81 minus 20=	* 61
INDEPENDENT CLAIMS	6 minus 3 =	* 3
MULTIPLE DEPENDENT CLAIM PRESENT		☐

* If the difference in column 1 is less than zero, enter "0" in column 2

SMALL ENTITY TYPE ☐		OR	OTHER THAN SMALL ENTITY	
RATE	FEE		RATE	FEE
BASIC FEE	375.00	OR	BASIC FEE	750.00
X$ 9=		OR	X$18=	1098
X42=		OR	X84=	252
+140=		OR	+280=	
TOTAL		OR	TOTAL	2100

45104

CLAIMS AS AMENDED - PART II

AMENDMENT A

	(Column 1) CLAIMS REMAINING AFTER AMENDMENT		(Column 2) HIGHEST NUMBER PREVIOUSLY PAID FOR	(Column 3) PRESENT EXTRA
Total	* 83	Minus	** 81	= 2
Independent	* 6	Minus	*** 6	=
FIRST PRESENTATION OF MULTIPLE DEPENDENT CLAIM				☐

SMALL ENTITY		OR	OTHER THAN SMALL ENTITY	
RATE	ADDITIONAL FEE		RATE	ADDITIONAL FEE
X$ 9=		OR	X$18=	36.00
X42=		OR	~~X84=~~ 562	
+140=		OR	~~+280=~~ 280	
TOTAL ADDIT. FEE		OR	TOTAL ADDIT. FEE	36.00

AMENDMENT B

	(Column 1) CLAIMS REMAINING AFTER AMENDMENT		(Column 2) HIGHEST NUMBER PREVIOUSLY PAID FOR	(Column 3) PRESENT EXTRA
Total	*	Minus	**	=
Independent	*	Minus	***	=
FIRST PRESENTATION OF MULTIPLE DEPENDENT CLAIM				☐

RATE	ADDITIONAL FEE		RATE	ADDITIONAL FEE
X$ 9=		OR	X$18=	
X42=		OR	X84=	
+140=		OR	+280=	
TOTAL ADDIT. FEE		OR	TOTAL ADDIT. FEE	

AMENDMENT C

	(Column 1) CLAIMS REMAINING AFTER AMENDMENT		(Column 2) HIGHEST NUMBER PREVIOUSLY PAID FOR	(Column 3) PRESENT EXTRA
Total	*	Minus	**	=
Independent	*	Minus	***	=
FIRST PRESENTATION OF MULTIPLE DEPENDENT CLAIM				☐

RATE	ADDITIONAL FEE		RATE	ADDITIONAL FEE
X$ 9=		OR	X$18=	
X42=		OR	X84=	
+140=		OR	+280=	
TOTAL ADDIT. FEE		OR	TOTAL ADDIT. FEE	

* If the entry in column 1 is less than the entry in column 2, write "0" in column 3.
** If the "Highest Number Previously Paid For" IN THIS SPACE is less than 20, enter "20."
***If the "Highest Number Previously Paid For" IN THIS SPACE is less than 3, enter "3."
The "Highest Number Previously Paid For" (Total or Independent) is the highest number found in the appropriate box in column 1.

Best Available Copy

OIPE JC67
MAR 0 3 2004
PATENT & TRADEMARK OFFICE

PTO/SB/21 (08-00)
Approved for use through 10/31/2002. OMB 0651-0031
U.S. Patent and Trademark Office: U.S. DEPARTMENT OF COMMERCE
Under the Paperwork Reduction Act of 1995, no persons are required to respond to a collection of information unless it displays a valid OMB control number.

TRANSMITTAL FORM

(to be used for all correspondence after initial filing)

Application Number	10/646,246
Filing Date	08/22/2003
First Named Inventor	S. Parkin
Group Art Unit	1762
Examiner Name	Unknown
Total Number of Pages in This Submission: 6	Attorney Docket Number: ARC920030057US1

ENCLOSURES *(check all that apply)*

- [x] Fee Transmittal Form
  - [ ] Fee Attached
- [x] Amendment / Reply **Preliminary**
  - [ ] After Final
  - [ ] Affidavits/declaration(s)
- [ ] Extension of Time Request
- [ ] Express Abandonment Request
- [ ] Information Disclosure Statement
- [ ] Certified Copy of Priority Document(s)
- [ ] Response to Missing Parts/ Incomplete Application
  - [ ] Response to Missing Parts under 37 CFR 1.52 or 1.53
- [ ] Assignment Papers *(for an Application)*
- [ ] Drawing(s)
- [ ] Licensing-related Papers
- [ ] Petition
- [ ] Petition to Convert to a Provisional Application
- [ ] Power of Attorney, Revocation Change of Correspondence Address
- [ ] Terminal Disclaimer
- [ ] Request for Refund
- [ ] CD, Number of CD(s) _____
- [ ] After Allowance Communication to Group
- [ ] Appeal Communication to Board of Appeals and Interferences
- [ ] Appeal Communication to Group *(Appeal Notice, Brief, Reply Brief)*
- [ ] Proprietary Information
- [ ] Status Letter
- [ ] Other Enclosure(s) *(please identify below)*:

Remarks

SIGNATURE OF APPLICANT, ATTORNEY, OR AGENT

Firm *or* Individual name	Daniel E. Johnson
Signature	Daniel E Johnson
Date	02/27/2004

CERTIFICATE OF MAILING

I hereby certify that this correspondence is being deposited with the United States Postal Service with sufficient postage as first class mail in an envelope addressed to: Mail Stop Non-Fee Amendment Commissioner for Patents, P.O.Box 1450, Alexandria, VA 22313-1450 on this date: 02/27/2004

Typed or printed name	Cheryl G. Ruby		
Signature	Cheryl G Ruby	Date	02/27/2004

Burden Hour Statement: This form is estimated to take 0.2 hours to complete. Time will vary depending upon the needs of the individual case. Any comments on the amount of time you are required to complete this form should be sent to the Chief Information Officer, U.S. Patent and Trademark Office, Washington, DC 20231. DO NOT SEND FEES OR COMPLETED FORMS TO THIS ADDRESS. SEND TO: Assistant Commissioner for Patents, Washington, DC 20231.

OIPE JC67 MAR 0 3 2004 PATENT & TRADEMARK OFFICE

PTO/SB/17 (10-01)
Approved for use through 10/31/2002. OMB 0651-0032
U.S. Patent and Trademark Office; U.S. DEPARTMENT OF COMMERCE
Under the Paperwork Reduction Act of 1995, no persons are required to respond to a collection of information unless it displays a valid OMB control number.

FEE TRANSMITTAL for FY 2002

Patent fees are subject to annual revision.

TOTAL AMOUNT OF PAYMENT ($) 0.00

Complete if Known	
Application Number	10/646,246
Filing Date	08/22/2003
First Named Inventor	S. Parkin
Examiner Name	Unknown
Group Art Unit	1762
Attorney Docket No.	ARC920030057US1

METHOD OF PAYMENT

1. ☑ The Commissioner is hereby authorized to charge indicated fees and credit any overpayments to:

Deposit Account Number: 09-0441

Deposit Account Name: IBM CORPORATION

☑ Charge Any Additional Fee Required Under 37 CFR 1.16 and 1.17

☐ Applicant claims small entity status. See 37 CFR 1.27

2. ☐ **Payment Enclosed:**

☐ Check ☐ Credit card ☐ Money Order ☐ Other

FEE CALCULATION

1. BASIC FILING FEE

Large Entity Fee Code	Large Entity Fee ($)	Small Entity Fee Code	Small Entity Fee ($)	Fee Description	Fee Paid
101	740	201	370	Utility filing fee	
106	330	206	165	Design filing fee	
107	510	207	255	Plant filing fee	
108	740	208	370	Reissue filing fee	
114	160	214	80	Provisional filing fee	

SUBTOTAL (1) ($) 0.00

2. EXTRA CLAIM FEES

	Extra Claims		Fee from below		Fee Paid
Total Claims		-20** =		X 18.00	= 0.00
Independent Claims		- 3** =		X 84.00	= 0.00
Multiple Dependent					=

Large Entity Fee Code	Large Entity Fee ($)	Small Entity Fee Code	Small Entity Fee ($)	Fee Description
103	18	203	9	Claims in excess of 20
102	84	202	42	Independent claims in excess of 3
104	280	204	140	Multiple dependent claim, if not paid
109	84	209	42	** Reissue independent claims over original patent
110	18	210	9	** Reissue claims in excess of 20 and over original patent

SUBTOTAL (2) ($) 0.00

**or number previously paid, if greater; For Reissues, see above

FEE CALCULATION (continued)

3. ADDITIONAL FEES

Large Entity Fee Code	Large Entity Fee ($)	Small Entity Fee Code	Small Entity Fee ($)	Fee Description	Fee Paid
105	130	205	65	Surcharge - late filing fee or oath	
127	50	227	25	Surcharge - late provisional filing fee or cover sheet	
139	130	139	130	Non-English specification	
147	2,520	147	2,520	For filing a request for *ex parte* reexamination	
112	920*	112	920*	Requesting publication of SIR prior to Examiner action	
113	1,840*	113	1,840*	Requesting publication of SIR after Examiner action	
115	110	215	55	Extension for reply within first month	
116	400	216	200	Extension for reply within second month	
117	920	217	460	Extension for reply within third month	
118	1,440	218	720	Extension for reply within fourth month	
128	1,960	228	980	Extension for reply within fifth month	
119	320	219	160	Notice of Appeal	
120	320	220	160	Filing a brief in support of an appeal	
121	280	221	140	Request for oral hearing	
138	1,510	138	1,510	Petition to institute a public use proceeding	
140	110	240	55	Petition to revive - unavoidable	
141	1,280	241	640	Petition to revive - unintentional	
142	1,280	242	640	Utility issue fee (or reissue)	
143	460	243	230	Design issue fee	
144	620	244	310	Plant issue fee	
122	130	122	130	Petitions to the Commissioner	
123	50	123	50	Processing fee under 37 CFR 1.17(q)	
126	180	126	180	Submission of Information Disclosure Stmt	
581	40	581	40	Recording each patent assignment per property (times number of properties)	
146	740	246	370	Filing a submission after final rejection (37 CFR § 1.129(a))	
149	740	249	370	For each additional invention to be examined (37 CFR § 1.129(b))	
179	740	279	370	Request for Continued Examination (RCE)	
169	900	169	900	Request for expedited examination of a design application	

Other fee (specify) _____

*Reduced by Basic Filing Fee Paid

SUBTOTAL (3) ($) 0.00

SUBMITTED BY				Complete (if applicable)	
Name (Print/Type)	Daniel E. Johnson	Registration No. (Attorney/Agent)	37,033	Telephone	408-927-3367
Signature	Daniel E Johnson			Date	02/27/2004

WARNING: Information on this form may become public. Credit card information should not be included on this form. Provide credit card information and authorization on PTO-2038.

Burden Hour Statement: This form is estimated to take 0.2 hours to complete. Time will vary depending upon the needs of the individual case. Any comments on the amount of time you are required to complete this form should be sent to the Chief Information Officer, U.S. Patent and Trademark Office, Washington, DC 20231. DO NOT SEND FEES OR COMPLETED FORMS TO THIS ADDRESS. SEND TO: Assistant Commissioner for Patents, Washington, DC 20231.

O I P E JC67
MAR 0 3 2004
PATENT & TRADEMARK OFFICE

PATENT

IN THE UNITED STATES PATENT AND TRADEMARK OFFICE

In re application of:	:	February 27, 2003
S. Parkin	:	Group Art Unit: 1762
Serial No.: 10/646,246	:	Examiner: Unknown
Filed: August 22, 2003	:	San Jose, California

Title: MgO Tunnel Barriers and Method of Formation

PRELIMINARY AMENDMENT

Commissioner for Patents
P.O. Box 1450
Alexandria, Virginia 22313-1450

Dear Sir:

Please amend the above-identified application as specified herein.

Amendments to the Specification:

On the page 1, immediately following the title of the invention, please insert the following sentence:

The U.S. Government has a paid-up license in this invention and the right in limited circumstances to require the patent owner to license others on reasonable terms as provided for by the terms of contract MDA972-99-C-0009 awarded by DARPA.

Please amend the paragraph beginning on page 43, line 3 as follows:

Extensive studies were carried out to explore the dependence of TMR on the thickness of the MgO tunnel barrier 120'. High TMR well above 100% was found for a wide range of MgO barrier thicknesses corresponding to RA values ranging from below ~80 $\Omega(\mu m)^2$ to more than 10^9 $\Omega(\mu m)^2$. Studies were carried out to determine the lowest possible RA values. The smallest RA values were obtained by depositing the thinnest possible Mg layers 122 and the thinnest possible MgO layers 124. RA values as low as ~1 $\Omega(\mu m)^2$ were obtained for Mg layers in the range of 4 to 5 Å and for MgO layers 124 in the range of 1-4 Å. However, for these ultra-low RA values reduced TMR was observed with TMR values in the range of 25 to 30%. As described in US Patent ~~6,349,289~~ 6,359,289 to Parkin, magnetic tunnel junction based recording read heads for future generation ultra high density magnetic recording disk drives require extremely low RA tunnel barriers with reasonable TMR values. The method of preparing MgO tunnel barriers 120' described in this patent may be extremely useful for such applications.

REMARKS

With this amendment, Applicant wishes to correct a typographical error and to provide a statement that there was government funding related to this invention, which had been inadvertently omitted in the application as filed.

Respectfully submitted,

S. Parkin

Daniel E. Johnson

Daniel E. Johnson (Reg. No. 37,033)
Agent for Applicants
Phone (408) 927-3367

ARC920030057US1.am1.doc

PTO/SB/05 (03-01)
Approved for use through 10/31/2002. OMB 0651-0032
U.S. Patent and Trademark Office; U.S. DEPARTMENT OF COMMERCE
Under the Paperwork Reduction Act of 1995, no persons are required to respond to a collection of information unless it displays a valid OMB control number.

UTILITY PATENT APPLICATION TRANSMITTAL

(Only for new nonprovisional applications under 37 CFR 1.53(b))

Attorney Docket No.	**ARC920030057US1**
First Inventor	**Stuart Stephen Papworth Parkin**
Title	**MgO Tunnel Barriers and Method of Formation**
Express Mail Label No.	**EU918989987US**

22154 U.S. PTO 10/646246 08/22/03

APPLICATION ELEMENTS

See MPEP chapter 600 concerning utility patent application contents.

ADDRESS TO: Assistant Commissioner for Patents
Box Patent Application
Washington, DC 20231

1. [✔] Fee Transmittal Form (e.g., PTO/SB/17) *(Submit an original and a duplicate for fee processing)*
2. [ ] Applicant claims small entity status. See 37 CFR 1.27.
3. [✔] Specification [*Total Pages* 59] *(preferred arrangement set forth below)*
   - Descriptive title of the invention
   - Cross Reference to Related Applications
   - Statement Regarding Fed sponsored R & D
   - Reference to sequence listing, a table, or a computer program listing appendix
   - Background of the Invention
   - Brief Summary of the Invention
   - Brief Description of the Drawings (*if filed*)
   - Detailed Description
   - Claim(s)
   - Abstract of the Disclosure
4. [✔] Drawing(s) *(35 U.S.C. 113)* [*Total Sheets* 15]
5. Oath or Declaration [*Total Pages* 2]
   a. [✔] Newly executed (original or copy)
   b. [ ] Copy from a prior application (37 CFR 1.63 (d)) *(for continuation/divisional with Box 18 completed)*
      i. [ ] DELETION OF INVENTOR(S) Signed statement attached deleting inventor(s) named in the prior application, see 37 CFR 1.63(d)(2) and 1.33(b).
6. [ ] Application Data Sheet. See 37 CFR 1.76
7. [ ] CD-ROM or CD-R in duplicate, large table or Computer Program (*Appendix*)
8. Nucleotide and/or Amino Acid Sequence Submission (*if applicable, all necessary*)
   a. [ ] Computer Readable Form (CRF)
   b. Specification Sequence Listing on:
      i. [ ] CD-ROM or CD-R (2 copies); or
      ii. [ ] paper
   c. [ ] Statements verifying identity of above copies

ACCOMPANYING APPLICATION PARTS

9. [✔] Assignment Papers (cover sheet & document(s))
10. [ ] 37 CFR 3.73(b) Statement *(when there is an assignee)* [✔] Power of Attorney
11. [ ] English Translation Document *(if applicable)*
12. [ ] Information Disclosure Statement (IDS)/PTO-1449 [ ] Copies of IDS Citations
13. [ ] Preliminary Amendment
14. [✔] Return Receipt Postcard (MPEP 503) *(Should be specifically itemized)*
15. [ ] Certified Copy of Priority Document(s) *(if foreign priority is claimed)*
16. [ ] Nonpublication Request under 35 U.S.C. 122 (b)(2)(B)(i). Applicant must attach form PTO/SB/35 or its equivalent.
17. [ ] Other: .....

18. If a CONTINUING APPLICATION, *check appropriate box, and supply the requisite information below and in a preliminary amendment, or in an Application Data Sheet under 37 CFR 1.76:*

[ ] Continuation [ ] Divisional [ ] Continuation-in-part (CIP) of prior application No.:_____/_____

Prior application information: *Examiner:*_____ *Group Art Unit:* _____

For CONTINUATION OR DIVISIONAL APPS only: The entire disclosure of the prior application, from which an oath or declaration is supplied under Box 5b, is considered a part of the disclosure of the accompanying continuation or divisional application and is hereby incorporated by reference. The incorporation can only be relied upon when a portion has been inadvertently omitted from the submitted application parts.

19. CORRESPONDENCE ADDRESS

[✔] *Customer Number or Bar Code Label* [redacted] or [ ] *Correspondence address below*

Name	**Daniel E. Johnson** 30355				
	PATENT TRADEMARK OFFICE				
Address					
City		*State*		*Zip Code*	
Country		*Telephone*	**(408) 927-3367**	*Fax*	**(408) 927-3375**

Name (Print/Type)	**Daniel E. Johnson**	*Registration No. (Attorney/Agent)*	**37,033**
Signature	Daniel E Johnson	*Date*	**8/22/03**

Burden Hour Statement: This form is estimated to take 0.2 hours to complete. Time will vary depending upon the needs of the individual case. Any comments on the amount of time you are required to complete this form should be sent to the Chief Information Officer, U.S. Patent and Trademark Office, Washington, DC 20231. DO NOT SEND FEES OR COMPLETED FORMS TO THIS ADDRESS. SEND TO: Assistant Commissioner for Patents, Box Patent Application, Washington, DC 20231.

PTO/SB/17 (10-01)
Approved for use through 10/31/2002. OMB 0651-0032
U.S. Patent and Trademark Office; U.S. DEPARTMENT OF COMMERCE
Under the Paperwork Reduction Act of 1995, no persons are required to respond to a collection of information unless it displays a valid OMB control number.

FEE TRANSMITTAL for FY 2002

Patent fees are subject to annual revision.

TOTAL AMOUNT OF PAYMENT ($) 2140.00

Complete if Known	
Application Number	Unassigned
Filing Date	08/22/2003
First Named Inventor	Stuart Steph n Papworth Parkin
Examiner Name	Unassigned
Group Art Unit	Unassigned
Attorney Docket No.	ARC920030057US1

METHOD OF PAYMENT

1. ☑ The Commissioner is hereby authorized to charge indicated fees and credit any overpayments to:

Deposit Account Number: 09-0441

Deposit Account Name: IBM Corporation

☑ Charge Any Additional Fee Required Under 37 CFR 1.16 and 1.17

☐ Applicant claims small entity status. See 37 CFR 1.27

2. ☐ Payment Enclosed:

☐ Check ☐ Credit card ☐ Money Order ☐ Other

FEE CALCULATION

1. BASIC FILING FEE

Large Entity Fee Code	Large Entity Fee ($)	Small Entity Fee Code	Small Entity Fee ($)	Fee Description	Fee Paid
101	740	201	370	Utility filing fee	750.00
106	330	206	165	Design filing fee	
107	510	207	255	Plant filing fee	
108	740	208	370	Reissue filing fee	
114	160	214	80	Provisional filing fee	

SUBTOTAL (1) ($) 750.00

2. EXTRA CLAIM FEES

		Extra Claims	Fee from below	Fee Paid
Total Claims	81	-20** = 61	x 18.00	= 1098.00
Independent Claims	6	-3** = 3	x 84.00	= 252.00
Multiple Dependent				=

Large Entity Fee Code	Large Entity Fee ($)	Small Entity Fee Code	Small Entity Fee ($)	Fee Description
103	18	203	9	Claims in excess of 20
102	84	202	42	Independent claims in excess of 3
104	280	204	140	Multiple dependent claim, if not paid
109	64	209	42	** Reissue independent claims over original patent
110	18	210	9	** Reissue claims in excess of 20 and over original patent

SUBTOTAL (2) ($) 1350.00

**or number previously paid, if greater; For Reissues, see above

FEE CALCULATION (continued)

3. ADDITIONAL FEES

Large Entity Fee Code	Large Entity Fee ($)	Small Entity Fee Code	Small Entity Fee ($)	Fee Description	Fee Paid
105	130	205	65	Surcharge - late filing fee or oath	
127	50	227	25	Surcharge - late provisional filing fee or cover sheet	
139	130	139	130	Non-English specification	
147	2,520	147	2,520	For filing a request for ex *parte* reexamination	
112	920*	112	920*	Requesting publication of SIR prior to Examiner action	
113	1,640*	113	1,840*	Requesting publication of SIR after Examiner action	
115	110	215	55	Extension for reply within first month	
116	400	216	200	Extension for reply within second month	
117	920	217	460	Extension for reply within third month	
118	1,440	218	720	Extension for reply within fourth month	
128	1,960	228	980	Extension for reply within fifth month	
119	320	219	160	Notice of Appeal	
120	320	220	160	Filing a brief in support of an appeal	
121	280	221	140	Request for oral hearing	
138	1,510	138	1,510	Petition to institute a public use proceeding	
140	110	240	55	Petition to revive - unavoidable	
141	1,280	241	840	Petition to revive - unintentional	
142	1,280	242	640	Utility issue fee (or reissue)	
143	460	243	230	Design issue fee	
144	620	244	310	Plant issue fee	
122	130	122	130	Petitions to the Commissioner	
123	50	123	50	Processing fee under 37 CFR 1.17(q)	
126	180	126	180	Submission of Information Disclosure Stmt	
581	40	581	40	Recording each patent assignment per property (times number of properties)	40
146	740	246	370	Filing a submission after final rejection (37 CFR § 1.129(a))	
149	740	249	370	For each additional invention to be examined (37 CFR § 1.129(b))	
179	740	279	370	Request for Continued Examination (RCE)	
169	900	169	900	Request for expedited examination of a design application	
Other fee (specify)					

*Reduced by Basic Filing Fee Paid

SUBTOTAL (3) ($) 40.00

SUBMITTED BY				Complete (if applicable)	
Name (Print/Type)	Daniel E. Johnson	Registration No. (Attorney/Agent)	37,033	Telephone	(408) 927-3367
Signature	Daniel E Johnson			Date	8/22/03

WARNING: Information on this form may become public. Credit card information should not be included on this form. Provide credit card information and authorization on PTO-2038.

Burden Hour Statement: This form is estimated to take 0.2 hours to complete. Time will vary depending upon the needs of the individual case. Any comments on the amount of time you are required to complete this form should be sent to the Chief Information Officer, U.S. Patent and Trademark Office, Washington, DC 20231. DO NOT SEND FEES OR COMPLETED FORMS TO THIS ADDRESS. SEND TO: Assistant Commissioner for Patents, Washington, DC 20231.

MgO Tunnel Barriers and Method of Formation

Technical field

The invention relates to magnetic tunnel junction (MTJ) magnetoresistive (MR) devices for use as magnetic field sensors such as read heads for reading magnetically recorded data, as memory cells in nonvolatile magnetic random access memory (MRAM) cells, and for magnetic logic and spintronic applications. More particularly, this invention relates to a method of forming a MgO tunnel barrier to allow for MTJ devices with significantly improved magnetoresistance.

Background of the Invention

The basic component of a magnetic tunnel junction is a sandwich of two thin ferromagnetic and/or ferrimagnetic layers separated by a very thin insulating layer through which electrons can tunnel. The tunneling current is typically higher when the magnetic moments of the ferromagnetic (F) layers are parallel and lower when the magnetic moments of the two ferromagnetic layers are anti-parallel. The change in conductance for these two magnetic states can be described as a magneto-resistance. Here the tunneling magnetoresistance (TMR) of the MTJ is defined as $(R_{AP}-R_P)/R_P$ where R_P and R_{AP} are the resistance of the MTJ for parallel and anti-parallel alignment of the ferromagnetic layers, respectively. MTJ devices have been proposed as memory cells for nonvolatile solid state memory and as external magnetic field sensors, such as TMR read sensors for heads for magnetic recording systems. For a memory cell application, one of the ferromagnetic layers in the MTJ has its magnetic moment fixed or pinned, so

that its magnetic moment is unaffected by the presence of the magnetic fields applied to the device during its operation. The other ferromagnetic layer in the sandwich is the free or sensing layer, whose moment responds to magnetic fields applied during operation of the device. In the quiescent state, in the absence of any applied magnetic field within the memory cell, the sensing layer magnetic moment is designed to be either parallel (P) or anti-parallel (AP) to the magnetic moment of the pinned ferromagnetic layer. For a TMR field sensor for read head applications, one of the ferromagnetic layers has its magnetic moment fixed or pinned so as to be generally perpendicular to the magnetic moment of the free or sensing ferromagnetic layer in the absence of an external magnetic field. The use of an MTJ device as a memory cell in an MRAM array is described in US Patent 5,640,343. The use of an MTJ device as a MR read head has been described in U.S. Patents 5,390,061; 5,650,958; 5,729,410 and 5,764,567.

Fig. 1 illustrates a cross-section of a conventional prior-art MTJ device. The MTJ 100 includes a bottom "fixed" ferromagnetic (F) layer 18, an insulating tunnel barrier layer 24, and a top "free" ferromagnetic layer 34. The MTJ 100 has bottom and top electrical leads 12 and 36, respectively, with the bottom lead being formed on a suitable substrate 11, such as a silicon oxide layer. The ferromagnetic layer 18 is called the fixed layer because its magnetic moment is prevented from rotating in the presence of an applied magnetic field in the desired range of interest for the MTJ device, e.g., the magnetic field caused by the write current applied to the memory cell from the read/write circuitry of the MRAM or the magnetic field from the recorded magnetic layer in a magnetic recording disk. The magnetic moment of the ferromagnetic layer 18, whose direction is indicated by the arrow 90 in Fig. 1, can be fixed by forming it from a high

coercivity magnetic material or by exchange coupling it to an antiferromagnetic layer 16. The magnetic moment of the free ferromagnetic layer 34 is not fixed, and is thus free to rotate in the presence of an applied magnetic field in the range of interest. In the absence of an applied magnetic field, the moments of the ferromagnetic layers 18 and 34 are aligned generally parallel (or anti-parallel) in an MTJ memory cell (as indicated by the double-headed arrow 80 in Fig. 1) and generally perpendicular in a MTJ magnetoresistive read head. The relative orientation of the magnetic moments of the ferromagnetic layers 18, 34 affects the tunneling current and thus the electrical resistance of the MTJ device. The bottom lead 12, the antiferromagnetic layer 16, and the fixed ferromagnetic layer 18 together may be regarded as constituting the lower electrode 10.

The basic concept of a magnetic tunnel junction was first realized in 1975 (M. Julliére, "*Tunneling between ferromagnetic films*", Phys. Lett. **54A**, 225 (1975)) although the TMR was very small and observed only at low temperatures and for very small bias voltages. In 1995 significant TMR effects of about 10% were obtained at room temperature in MTJs with Al_2O_3 tunnel barriers by two different groups (J.S. Moodera et al., "*Large magnetoresistance at room temperature in ferromagnetic thin film tunnel junctions",* Phys. Rev. Lett. **74**, 3273 (1995); and T. Miyazaki and N. Tezuka, "*Giant magnetic tunneling effect in Fe/Al_2O_3/Fe junction*", J. Magn. Magn. Mat. **139**, L231 (1995)). Subsequently, S.S.P. Parkin et al. ("*Exchange-biased Magnetic Tunnel Junctions and Application to Non-Volatile Magnetic Random Access Memory*", J. Appl. Phys. **85**, 5828 (1999)) obtained effects as large as about 48-50% by optimizing the growth of the Al_2O_3 tunnel barrier, by optimizing the interface between the Al_2O_3 tunnel barrier and the ferromagnetic electrodes, and by carefully controlling the magnetic

orientation of the ferromagnetic moments using concepts of magnetic engineering, in particular, exchange bias (see US Patent 5,650,958 titled "*Magnetic tunnel junctions with controlled magnetic response*" to W.J. Gallagher et al.) and an anti-parallel coupled pinned ferromagnetic layer (see US Patent 5,841,692 titled "*Magnetic tunnel junction device with antiferromagnetically coupled pinned layer*" to W.J. Gallagher et al.).

The magnetoresistance of MTJs using aluminum oxide tunneling barriers is limited to about 50% at room temperature (S.S.P. Parkin et al., "*Exchange-biased Magnetic Tunnel Junctions and Application to Non-Volatile Magnetic Random Access Memory*", J. Appl. Phys. **85**, 5828 (1999); X.-F. Han et al., "*Fabrication of high-magnetoresistance tunnel junctions using $Co_{75}Fe_{25}$ ferromagnetic electrodes*", Appl. Phys. Lett. **77**, 283 (2000)), although there have been reports of TMR values of up to about 58% at room temperature (M. Tsunoda et al., "*60% magnetoresistance at room temperature in Co–Fe/Al–O/Co–Fe tunnel junctions oxidized with Kr–O2 plasma*", Appl. Phys. Lett. **80**, 3135 (2002)). The detailed structure and composition of the barrier and particularly the structure and composition of the interfaces between the barrier and the ferromagnetic electrodes clearly influences the magnitude of the TMR (as well as the resistance of the junctions). Usually the Al_2O_3 tunnel barrier is formed by first depositing a thin aluminum layer and then oxidizing this layer either by using an oxygen plasma or by oxidation in oxygen or air. Incomplete or under-oxidation of the barrier may lead to "pin-holes" in the barrier which will usually result in a diminishment of the TMR. On the other hand, over-oxidation of the barrier or excess oxygen within the barrier or at the barrier surface will result in oxidation of the ferromagnetic electrodes which also usually results in decreased TMR. There have been a small number of reports of improved TMR

by using special methods of forming Al_2O_3 tunnel barriers. For example, Tsunoda et al., "*60% magnetoresistance at room temperature in Co–Fe/Al–O/Co–Fe tunnel junctions oxidized with Kr–O2 plasma*", Appl. Phys. Lett. **80**, 3135 (2002), assert that it is preferred to oxidize the Al layer by using a plasma formed from an inert gas-oxygen mixture where the inert gas is Kr or He. They argue that this method results in an improved barrier layer, because it has previously been shown that SiO_2 gate dielectric layers have improved properties (lower number of interface defect states) when formed by oxidation using inert gas–O_2 plasmas.

The tunnel magnetoresistance (TMR) of MTJs is also influenced by the ferromagnetic electrode. For electrodes formed from Ni-Fe, Co-Fe or Ni-Fe-Co alloys, it is now generally agreed that there is a surprisingly weak dependence of TMR on the composition of this alloy (S.S.P. Parkin et al., "*Exchange-biased Magnetic Tunnel Junctions and Application to Non-Volatile Magnetic Random Access Memory*", J. Appl. Phys. **85**, 5828 (1999); D.J. Monsma and S. S. P. Parkin, "*Spin polarization of tunneling current from ferromagnet/Al_2O_3 interfaces using copper-doped aluminum superconducting films*", Appl. Phys. Lett. **77**, 720 (2000)), but that the magnitude of the TMR is strongly influenced by the quality of the interface between the ferromagnetic electrode and the Al_2O_3 tunnel barrier. Once the interface structure is optimized, either by optimizing the growth or by post-growth annealing, for sufficiently thick Al_2O_3 tunnel barriers which give rise to resistance-area (RA) products exceeding ~100-500 $\Omega\mu m^2$, TMR values between 40 and 50% can be obtained for almost all of these ferromagnetic alloys. As the tunnel barrier thickness and the corresponding RA value are decreased below this value, it is generally found that the maximum TMR which can be obtained is

reduced (see US Patent 6,226,160 titled "*Small area magnetic tunnel junction devices with low resistance and high magnetoresistance*" to W.J. Gallagher and S.S.P. Parkin, which is hereby incorporated by reference).

For applications of magnetic tunnel junctions for either magnetic recording heads or for non-volatile magnetic memory storage cells, high TMR values are needed for improving the performance of these devices. The speed of operation of the recording head or memory is related to the signal to noise ratio (SNR) provided by the MTJ--higher TMR values will lead to higher SNR values for otherwise the same resistance. Moreover, for memory applications, the larger the TMR, the greater is the variation in resistance of the MTJs from device to device which can be tolerated. Since the resistance of an MTJ depends exponentially on the thickness of the tunneling barrier, small variations in thickness can give rise to large changes in the resistance of the MTJ. Thus high TMR values can be used to mitigate inevitable variations in tunnel barrier thickness from device to device. The resistance of an MTJ device increases inversely with the area of the device. As the density of memory devices increases in the future, the thickness of the tunnel barrier will have to be reduced (for otherwise the same tunnel barrier material) to maintain an optimal resistance of the MTJ memory cell for matching to electronic circuits. Thus a given variation in thickness of the tunnel barrier (introduced by whatever process is used to fabricate the MTJ) will become an increasingly larger proportion of the reduced tunnel barrier thickness and so will likely give rise to larger variations in the resistance of the MTJ device.

The tunneling current in an MTJ is spin polarized, which means that the electrical current passing from one of the ferromagnetic layers is predominantly composed of

electrons of one spin type (spin up or spin down, depending on the orientation of the magnetization of the ferromagnetic layer). The spin polarization P of the current can be inferred from a variety of different measurements. The measurement most relevant to magnetic tunneling is to measure the conductance as a function of bias voltage for junctions formed from a sandwich of the ferromagnetic material of interest and a superconducting counter electrode (R. Meservey and P. M. Tedrow, Phys. Rep. **238**, 173 (1994)). These studies show that the spin polarization of the tunnel current measured in this way can be simply related to the TMR close to zero bias voltage as first proposed by Juliere (M. Julliére, Phys. Lett. **54A**, 225 (1975)). In such a model P is defined as $(n_\uparrow - n_\downarrow)/(n_\uparrow + n_\downarrow)$, where $n_\uparrow$ and $n_\downarrow$ are the density of spin up and spin down states at the ferromagnet/ insulator interface. By assuming that the tunnel current is comprised of two independent majority and minority spin currents and that these currents are related to the respective density of states of the majority and minority carriers in the opposing ferromagnetic electrodes, the TMR can be formulated by the relation TMR=$(R_{AP} - R_P)/R_P = 2P_1P_2/(1 - P_1P_2)$, where R_{AP} and R_P are the resistance of the MTJ for anti-parallel and parallel orientation of the ferromagnetic electrodes, respectively, and P_1 and P_2 are the spin polarization values of the two ferromagnetic electrodes. Experimentally, it is clear that the magnitude of the TMR is extremely sensitive to the nature of the interface between the tunneling barrier and the ferromagnetic electrode. By changing the properties of the interface layer, for example, by inserting very thin layers of non-magnetic metals between the ferromagnet and the insulator layers, the TMR can be dramatically altered. Based on such observations, most experimental data on magnetic tunneling have usually been interpreted by assuming that P is largely

determined by the electronic structure of the ferromagnetic interface layer essentially independent of the tunnel barrier electronic structure.

Recently, it has been speculated that the electronic structure of the tunnel barrier may play a more important role than previously realized (W. H. Butler, X.-G. Zhang, T. C. Schulthess et al., Phys. Rev. B **63**, 054416 (2001); and P. Mavropoulos, N. Papanikolaou, and P. H. Dederichs, Phys. Rev. Lett. **85**, 1088 (2000)). In particular, the primary role of the tunnel barrier was previously assumed to be to determine the evanescent decay length of the electronic wave functions into the tunnel barrier region. Butler et al. and Mavropoulos et al. have argued that the evanescent decay length depends on both the momentum of the electrons transverse to the ferromagnet/ insulator interface as well as the Bloch symmetry of these wave functions. Butler et al. have especially considered the case of Fe/MgO/Fe, since it has long been recognized that there is an almost perfect lattice match between the simple cubic structure of the MgO insulator and the body-centered cubic (bcc) structure of Fe for the (100) crystallographic orientation if the lattices are rotated by 45 degrees. Butler et al. find that for the (100) orientation there is a very slow decay into the MgO barrier of *majority* spin electron states with Δ_1 symmetry for small transverse momentum. Thus, for parallel orientation of the ferromagnetic electrodes in an MTJ, these electronic states lead to a very high conductance across the tunnel barrier. Butler et al. calculate that the Fe/MgO/Fe system should exhibit TMR values of hundreds or even thousands of percent. Moreover, Butler et al. calculate that the TMR should have a very strong dependence on MgO tunnel barrier thickness, increasing by orders of magnitude as the MgO thickness is changed by a few atomic layers. Such speculations have led to numerous experimental studies to

explore the possibility of high TMR in epitaxial (100) oriented Fe/MgO/Fe tunnel junctions. Note that early work by several groups on MTJs containing polycrystalline MgO tunnel barriers found no evidence for large TMR values.

Some of the first studies of Fe/MgO/Fe MTJs were those by Keavney et al. (D. J. Keavney, E. E. Fullerton, and S. D. Bader, J. Appl. Phys. **81**, 795 (1997)) who prepared high quality epitaxial MgO tunnel barriers on Fe single crystal whiskers using molecular beam epitaxy (MBE) growth techniques in which the Fe and MgO layers were deposited by electron beam evaporation. Keavney et al. argued that the MgO incompletely wets the Fe underlayer leading to pin-holes in the MgO layer and, thus, to ferromagnetic coupling of the Fe layers through the MgO layer. The pin-holes through the tunnel barrier electrically shorted the MTJ so that no TMR was observed. These authors concluded that MgO was a very poor choice for a tunneling barrier in MTJs. Later Wulfhekel et al. (W. Wulfhekel, M. Klaua, D. Ullmann, et al., Appl. Phys. Lett. **78**, 509 (2001)) prepared high quality epitaxial MgO tunnel barriers on Fe single-crystal whiskers using both molecular beam epitaxy (MBE) and pulsed laser deposition (PLD) growth techniques. This group concluded, by looking at tunneling through the MgO layer using scanning probe microscopy, that a significant portion of the electrical current tunneled through the MgO layer, although there were some local hot spots. The hot spots correspond to some sort of defect or pin-hole. However, although the crystalline quality of these films was very good, this group found no evidence for significant tunneling magnetoresistance in their samples.

The first report of significant tunneling magnetoresistance through epitaxially grown MgO tunnel barriers was by Bowen et al. (M. Bowen, V. Cros, F. Petroff, et al.,

Appl. Phys. Lett. **79**, 1655 (2001)), who reported 60% TMR but at low temperatures (30K). However, at room temperature this group reported TMR values of only 27%, which is much lower than TMR values that have been obtained with conventional amorphous Al_2O_3 tunnel barriers. This group studied sandwiches of CoFe/MgO/Fe grown on GaAs(100) with MgO(100) buffer layers by a combination of sputtering (CoFe and Fe) and laser ablation (MgO). The MgO barrier was grown at 400 °C, and the Fe and CoFe layers were deposited at room temperature, but the Fe layer was annealed at 400 °C after deposition and prior to deposition of the MgO layer on top of it. The $Co_{50}Fe_{50}$ layer was the top electrode and was presumably used to allow for different magnetic switching fields for the two ferromagnetic electrodes. This group studied TMR in junctions with very thick Fe and CoFe layers (~200 Å and 250 Å, respectively)--much too thick for useful applications because of the very large demagnetizing fields that would be produced by these thick layers. This group explored MgO layers in a range of thickness from 20 to 80 Å, and from cross-section transmission electron microscopy studies found good quality crystalline (100) oriented MgO layers for these thicknesses. Based on the predictions by Butler et al. that the TMR for epitaxial MgO tunnel barriers should increase strongly with MgO thickness, Bowen et al. argued that the small TMR values they observed might be increased for thicker MgO tunnel barriers, although they only included tunneling transport data for one MgO layer thickness.

Popova et al. (E. Popova, J. Faure-Vincent, C. Tiusan, et al., Appl. Phys. Lett. **81**, 1035 (2002)) have published results on epitaxial 100 oriented Fe/MgO/Fe/Co MTJs deposited by MBE on MgO(100) substrates. This group prepared the Fe layers by evaporation from a Knudsen cell and the Co and MgO layers by electron beam

evaporation. The first Fe layer was deposited at room temperature and then annealed at 450 °C after deposition and prior to deposition of the MgO barrier. This group reported modest values of TMR at room temperature of only ~15% for junctions with 10 Å thick MgO barriers, although the crystalline quality of the structures was very good with smooth and epitaxial Fe and MgO layers. This same group has recently published data on similar structures with thicker tunnel barriers (25 Å thick) in which TMR values of up to 67% were found at room temperature (J. Faure-Vincent, C. Tiusan, E. Jouguelet, et al., Appl. Phys. Lett. **82**, 4507 (2003)). They argue that thick MgO tunnel barriers are needed to obtain these higher TMR values, even though the TMR they find is not significantly higher than that which has been observed in MTJs with Al_2O_3 tunnel barriers. Popova et al. also suggest that the modest TMR values they find, especially when compared to the theoretical predictions of Butler et al., may result from the formation of an FeO layer at the Fe/MgO interface during the deposition of MgO on the lower Fe electrode. The formation of an FeO layer was previously postulated by Meyerheim et al. (H. L. Meyerheim, R. Popescu, J. Kirschner, et al., Phys. Rev. Lett. **87**, 076102 (2001)), who found evidence for a such a layer from detailed structural investigations using surface x-ray diffraction of the growth of MgO on single crystal Fe(001) substrates. Recently, X.-G. Zhang, W. H. Butler, and A. Bandyopadhyay (Phys. Rev. B (2003)) have carried out calculations of the TMR for Fe/FeO/MgO/Fe junctions and have found that the presence of an FeO layer substantially reduces the predicted TMR values for this system.

Recently Mitani et al. (S. Mitani, T. Moriyama, and K. Takanashi, J. Appl. Phys. **93**, 8041 (2003)) have also attempted to prepare epitaxial Fe/MgO/Fe tunnel junctions by

growth on single crystalline MgO(100) substrates. Mitani et al. first deposited an Fe layer (200 Å thick) by electron beam deposition at room temperature with a subsequent post-deposition anneal at 200 °C. They then deposited a MgO tunnel barrier by depositing a thin layer of Mg, plasma oxidizing this layer in an Ar-O_2 mixture, and then repeating this process several times to create the tunnel barrier. Subsequently they deposited a $Co_{50}Fe_{50}$ counter electrode on top of the MgO barrier to create the MTJ. Although this group was able to prepare high quality epitaxial tunnel junctions, these junctions showed poor TMR, with TMR values at low temperatures (4.2 K) of only 22.9%. The resistance of the tunnel junctions was found to decrease substantially with temperature, which Mitani et al. argued was due to poor quality MgO tunnel barriers with defects in the barrier, which resulted in hopping conductivity of the tunneling electrons through these defects.

In US patent 6,392,281, Tsuge discloses a means of forming a magnetic tunnel junction formed from two ferromagnetic layers separated by an oxide tunnel barrier by first depositing the lower ferromagnetic electrode with or without a metal overlayer and then forming an oxide of the metal layer, if present, and the upper portion of the ferromagnetic layer by exposing these layers to ultra-pure oxygen. When the metal layer is not initially present, a metal layer is subsequently formed on top of the ferromagnetic oxide layer and is then subjected to oxidation by pure oxygen gas. Tsuge argues that a subsequent heat treatment will cause oxygen to diffuse from the ferromagnetic oxide layer into the metal oxide, which forms the tunnel barrier, if the heat of formation of the metal oxide is significantly greater than that of the ferromagnetic oxide. However, the devices of Tsuge have considerably lower tunnel magnetoresistance values than those

fabricated using other prior art methods of forming the tunnel barrier and magnetic tunnel junction. Evidently, Tsuge does not demonstrate any improvement over the prior art because the heat of formation of the metal oxide versus the formation of the ferromagnetic oxide is not the critical parameter in determining whether oxygen from the ferromagnetic oxide will diffuse away from this layer into the metal oxide layer. Even though the oxygen may be in a lower energy state in the oxide barrier, the metal oxide barrier will be fully oxidized by the process described by Tsuge because of the high heat of formation of the metal layers disclosed therein. Thus, all the oxygen sites in the metal oxide layer will be occupied, which does not allow for the diffusion of oxygen from the ferromagnetic oxide layer. Moreover, the diffusion of oxygen through a ferromagnetic oxide layer is likely to be small, so that the diffusion of oxygen from the ferromagnetic oxide into the metal oxide layer will require extreme conditions of high temperature. In other words, there will be considerable energy barriers to the flow of oxygen from the ferromagnetic oxide layer into the metal oxide layer, even if there are unoccupied oxygen sites in the metal oxide layer, so that oxygen will not diffuse over distances of more than about 1 atomic layer into the metal oxide layer. Thus it is not surprising that the devices formed by Tsuge have very low tunneling magnetoresistance values, because the surface of the ferromagnetic layer will not be free of oxide, in contradiction to the assertions of Tsuge.

There is a need for high quality, defect free MgO tunnel junctions, as well as MTJ devices having significantly higher magnetoresistance values than those in the prior art.

Summary of the Invention

Methods are disclosed in which a MgO tunnel barrier is prepared with improved performance. In particular, the MgO barrier can be formed without oxidizing the lower ferromagnetic (or ferrimagnetic) electrode in magnetic tunnel junction devices, so as to give much higher tunnel magnetoresistance values than in the prior art. Similarly, much higher spin polarization values of tunneling current are obtained in tunnel junction devices with one or more ferromagnetic (or ferrimagnetic) electrodes. The MgO tunnel barrier so formed does not have a significant number of defects that would otherwise lead to hopping conductivity through the tunnel barrier. In preferred methods, highly oriented (100) MgO barriers are formed without using single crystalline substrates or high deposition temperatures, thereby facilitating the manufacture of devices using standard deposition techniques on polycrystalline or amorphous films. Post anneal treatments are preferred to improve the tunneling magnetoresistance, which can exceed 160% at room temperature.

In one aspect of the invention, there is provided a method that includes depositing Mg onto a surface of an underlayer to form a Mg layer thereon, in which the surface is selected to be substantially free of oxide. The method further includes directing additional Mg, in the presence of oxygen, towards the Mg layer to form a MgO tunnel barrier that is in contact with the underlayer, in which the oxygen reacts with the additional Mg and the Mg layer to form the MgO tunnel barrier. The thickness of the Mg layer is preferably selected to be large enough to prevent oxidation of the underlayer but small enough that, upon reaction of the oxygen with the Mg layer, substantially all the Mg in the Mg layer is converted into MgO. The MgO tunnel barrier may be annealed to

improve its performance. The Mg layer is preferably deposited in the absence of substantial amounts of reactive oxygen, so that the Mg layer is oxidized as the MgO tunnel barrier is formed. A source of MgO may be used to act as a source of both the oxygen and the additional Mg. Alternatively, the oxygen may include ionized oxygen, atomic oxygen, or the oxygen may be provided by a rare gas-oxygen plasma (e.g., an argon-oxygen plasma). The Mg layer preferably has a thickness of between 3 and 20 angstroms, more preferably between 4 and 8 angstroms, and still more preferably between 3 and 8 angstroms. The additional Mg in this method may be provided by at least one of the following techniques: reactive sputtering, ion-beam sputtering, evaporation, pulsed laser deposition, and molecular beam epitaxy.

In one preferred method, the underlayer includes a semiconductor, such as GaAs.

In another preferred method, the underlayer includes a ferrimagnetic material. The method may further include forming an overlayer on the MgO tunnel barrier, in which the overlayer includes (for example) a ferrimagnetic material.

In yet another preferred method, the underlayer includes a ferromagnetic material. The ferromagnetic material may include Fe, and may be bcc and substantially (100) oriented. Alternatively, the ferromagnetic material may include an alloy of Fe and Co, in which the Fe content of the alloy is between 1 and 99 atomic %. The alloy is then preferably bcc and substantially (100) oriented. The method may further include forming an overlayer on the MgO tunnel barrier to form a magnetic tunnel junction, in which the overlayer includes (for example) a ferromagnetic material, which may also be substantially (100) oriented. The oxygen content is preferably carefully selected to increase the magnetoresistance of the magnetic tunnel junction. Also, the magnetic

tunnel junction may be advantageously annealed to increase its tunnel magnetoresistance, e.g., the tunnel junction may be annealed at a temperature selected to yield a (room temperature) tunnel magnetoresistance of greater than 100%, or preferably greater than 120%, or more preferably greater than 140%, or still more preferably greater than 160%. The overlayer and the underlayer may include ferromagnetic materials selected from the group consisting of i) Fe, ii) an alloy of Co and Fe (e.g., in which the Fe content of the alloy is preferably 10-20 atomic %), iii) an alloy of Ni and Fe, and iv) an alloy of Ni and Fe and Co. The ferromagnetic material of the underlayer and the MgO tunnel barrier are preferably substantially (100) oriented. In one preferred method, at least one of the underlayer and the overlayer includes antiferromagnetic material that is exchange biased with the ferromagnetic material of that layer, in which the antiferromagnetic material includes at least one alloy selected from the group consisting of Ir-Mn and Pt-Mn, and in which this alloy is substantially (100) oriented and is fcc or slightly distorted fcc. Also, the underlayer may include antiferromagnetic material over (e.g., in contact with) at least one layer selected from the group consisting of Ta and TaN.

In another preferred method, an overlayer is formed on the MgO tunnel barrier, in which one of the overlayer and the underlayer includes a non-ferromagnetic, non-ferrimagnetic metal layer, and the other of the overlayer and the underlayer includes a ferrimagnetic layer.

In yet another preferred method, an overlayer is formed on the MgO tunnel barrier, in which one of the overlayer and the underlayer includes a non-ferromagnetic, non-ferrimagnetic metal layer, and the other of the overlayer and the underlayer includes a ferromagnetic layer. The method may further include constructing a magnetic

tunneling transistor that includes the non-ferromagnetic, non-ferrimagnetic metal layer, the MgO tunnel barrier, and the ferromagnetic layer. The non-ferromagnetic, non-ferrimagnetic metal layer may include a metal selected from the group consisting of Cu, W, Al, AlN, Nb, NbN, WTi, Ti, TiN, Ta, and TaN. The ferromagnetic layer may include a ferromagnetic material selected from the group consisting of i) Fe, ii) an alloy of Co and Fe, iii) an alloy of Ni and Fe, and iv) an alloy of Ni and Fe and Co. Preferably, the ferromagnetic material and the MgO tunnel barrier are substantially (100) oriented, and the ferromagnetic material is bcc.

In still another preferred method, an overlayer is formed on the MgO tunnel barrier, in which the overlayer and the underlayer comprise respective non-ferromagnetic, non-ferrimagnetic metals. The metals may be selected from the group consisting of Cu, Al, AlN, W, Nb, NbN, Pt, Pd, Ir, RuO_2, Ru, and IrO_2.

A preferred embodiment of the invention is a structure that includes an underlayer having a surface that is substantially free of oxide formed from the underlayer (e.g., native oxide), a MgO tunnel barrier in contact with the surface of the underlayer, and an overlayer, in which the MgO tunnel barrier is in contact with a surface of the overlayer, with the MgO tunnel barrier being sandwiched between the underlayer and the overlayer. The surface of the overlayer is preferably substantially free of oxide formed from the overlayer (e.g., native oxide). At least one of the overlayer and the underlayer may include a spacer layer that is in contact with the MgO tunnel barrier, in which the spacer layer is selected to not substantially interfere with the tunneling properties of the MgO tunnel barrier.

In one preferred embodiment, at least one of the underlayer and the overlayer include a ferrimagnetic material.

In another preferred embodiment, the overlayer and the underlayer include respective ferromagnetic materials that together with the MgO tunnel junction form a magnetic tunnel junction, in which i) the amount of any oxide separating the MgO tunnel barrier from the ferromagnetic materials is sufficiently low, and ii) the MgO tunnel barrier, the underlayer, and the overlayer are sufficiently free of defects, that the room temperature tunnel magnetoresistance of the magnetic tunnel junction is greater than 70% (more preferably greater than 100%, and still more preferably greater than 160%). At least one of the underlayer and the overlayer may include antiferromagnetic material that is exchange biased with the ferromagnetic material of that layer, in which the antiferromagnetic material includes at least one alloy selected from the group consisting of Ir-Mn and Pt-Mn, with the alloy being substantially (100) oriented and fcc or slightly distorted fcc. The underlayer may include antiferromagnetic material over (e.g., in contact with) at least one layer selected from the group consisting of Ta and TaN.

In yet another preferred embodiment, the underlayer and the overlayer include respective non-ferromagnetic, non-ferrimagnetic metals.

In still another preferred embodiment, one of the underlayer and the overlayer includes a layer of ferromagnetic material, and the other of the underlayer and the overlayer includes a layer of non-ferromagnetic, non-ferrimagnetic metal. In this embodiment, it is preferred that i) the amount of any oxide separating the MgO tunnel barrier from the underlayer and the overlayer is sufficiently low, and ii) the MgO tunnel barrier, the underlayer, and the overlayer are sufficiently free of defects, that the spin

polarization of tunneling current passing through the structure is greater than 50%, and more preferably greater than 70%.

Another preferred aspect of the invention is a method that comprises constructing a magnetic tunnel junction that includes a MgO tunnel barrier, in which the MgO tunnel barrier is formed by depositing Mg (in the presence of oxygen) onto a Mg layer substantially free of oxide. The Mg layer preferably has a thickness of between 3 and 20 angstroms. The oxygen may be provided by a rare gas-oxygen plasma. The method advantageously further includes annealing the magnetic tunnel junction to increase its magnetoresistance at a temperature selected to yield a room temperature tunnel magnetoresistance of greater than 100%, more preferably greater than 120%, still more preferably greater than 140%, and most preferably greater than 160%.

Still another preferred aspect of the invention is a method that comprises forming a layer of Mg, providing an oxidizing atmosphere, and depositing Mg (in the presence of the oxidizing atmosphere) onto the Mg layer to form a MgO tunnel barrier. The Mg layer may be formed on a ferrimagnetic layer. Alternatively, the Mg layer may be formed on a ferromagnetic layer, and the method may further comprise forming a ferromagnetic layer on the MgO tunnel barrier to construct a magnetic tunnel junction. The method advantageously includes annealing the MgO tunnel barrier to improve its performance.

Yet another preferred aspect of the invention is a method that includes providing an underlayer having a surface that is substantially free of oxide, forming a metal layer on the surface to both protect the underlayer from oxidation and to wet the underlayer, and directing Mg and oxygen onto the metal layer to form a MgO tunnel barrier that is contact with the underlayer. The metal layer preferably includes Mg. The underlayer

may include at least one material selected from the group consisting of ferrimagnetic materials and ferromagnetic materials. The method advantageously includes annealing the MgO tunnel barrier to improve its performance.

Still another preferred aspect of the invention is a method that includes forming a Mg layer of a preselected thickness on a surface of an underlayer to protect the underlayer from oxidation, and then directing oxygen and additional Mg towards the Mg layer, so that the oxygen reacts with the Mg layer and the additional Mg to form a MgO tunnel barrier on the underlayer. The thickness of the Mg layer is selected to be small enough that substantially all the Mg of the Mg layer reacts with oxygen to form MgO. The surface is preferably selected to be substantially free of oxide. The method may further comprise forming an overlayer on the MgO tunnel barrier, in which the overlayer and the underlayer each include ferromagnetic material, thereby forming a magnetic tunnel junction. Alternatively, the method may further comprise forming an overlayer on the MgO tunnel barrier, in which the overlayer and the underlayer each include at least one material selected from the group consisting of ferromagnetic materials and ferrimagnetic materials, thereby forming a magnetic tunnel junction. The method may advantageously include annealing the magnetic tunnel junction to increase its tunnel magnetoresistance.

For several aspects and embodiments of the invention disclosed herein, a MgO tunnel barrier is sandwiched between an underlayer and an overlayer, either one or both of which may include one or more layers of a ferromagnetic material, a ferrimagnetic material, and/or a semiconductor. While the MgO tunnel barrier is preferably in direct contact with the ferromagnetic material, ferrimagnetic material and/or semiconductor,

each of the underlayer and overlayer may optionally include one or more spacer layers which are adjacent to the MgO tunnel barrier but which do not significantly affect the tunneling properties of the MgO layer, e.g., by not significantly diminishing the spin polarization of electrons tunneling through the MgO tunnel barrier.

Performance of the MgO tunnel barriers disclosed herein may be improved through annealing, wherein performance refers to various attributes of the MgO tunnel barrier or associated device. For example, annealing a magnetic tunnel junction improves, in particular, its magneto-tunneling resistance; annealing a tunnel barrier improves, in particular, its spin polarization; annealing a MIM or a capacitor improves, in particular, its leakage current or barrier height.

For a fuller understanding of the nature and advantages of the present invention, reference should be made to the following detailed description taken together with the accompanying figures.

Brief Description of the Drawings

Figure 1 is a schematic of a magnetic tunnel junction formed in accordance with the prior art.

Figure 2A illustrates the sequence of layers that are deposited to form a magnetic tunnel junction of the present invention.

Figure 2B is a cross sectional view of the magnetic tunnel junction that is formed according to the methodology of Figure 2A.

Figure 3 shows the dependence of tunneling magnetoresistance and resistance on the thickness of a Mg layer used in forming a MgO tunnel barrier of a magnetic tunnel junction of the present invention.

Figure 4 illustrates how the tunneling magnetoresistance and resistance (measured at 25 ° C) vary as a function of annealing temperature for two magnetic tunnel junction devices formed in accordance with the present invention.

Figure 5 illustrates how the tunneling magnetoresistance and resistance (measured at 25 ° C) vary as a function of annealing temperature for three magnetic tunnel junction devices formed in accordance with the present invention.

Figure 6 illustrates how the tunneling magnetoresistance (measured at 25 °C) of a magnetic tunnel junction of the present invention varies as a function of magnetic field in the plane of the device, for final anneal treatments at 220 °C and 360 °C.

Figure 7 illustrates how tunneling magnetoresistance (measured at 25 °C) of a magnetic tunnel junction of the present invention varies as a function of magnetic field in the plane of the device, for final anneal treatments at 120 °C and 380 °C.

Figure 8 illustrates how tunneling magnetoresistance and resistance–area product (measured at 25 °C) for three magnetic tunnel junction devices of the present invention vary as a function of annealing temperature.

Figure 9 illustrates how tunneling magnetoresistance and resistance-area product of a magnetic tunnel junction device of the present invention vary as a function of measurement temperature, for both the parallel (P) and anti-parallel (AP) orientation of the ferromagnetic layers.

Figures 10A, 10B, and 10C are cross sectional views of alternative tunnel junction devices of the present invention that employ MgO tunnel barriers.

Figure 10D is a cross sectional view of a metal/insulator/metal device of the present invention that employs a MgO tunnel barrier.

Figure 11 is a cross sectional view of a magnetic tunnel junction device of the present invention that employs spacer layers.

Description of the Preferred Embodiments

To date the tunneling barrier that has been most extensively studied for MTJs is alumina (Al_2O_3), where the ferromagnetic electrodes are typically formed from various Ni-Fe or Co-Fe or Ni-Co-Fe alloys. While a wide variety of methods have been used to deposit the alumina tunneling barrier, perhaps the most widely used method is one in which a thin layer of metallic Al is first deposited. Subsequently this layer is oxidized, either by "natural oxidation", in which the Al layer is exposed to oxygen or air, or by plasma oxidation, in which the Al layer is placed in an oxygen plasma and the Al layer is often electrically biased by a few volts to enhance the plasma oxidation. The Al layer can also be oxidized by a beam of energetic oxygen ions. For thinner Al layers, it is usually preferred to oxidize the Al layer by natural oxidation. In view of this prior art method of forming Al_2O_3, the formation of MgO tunneling barriers was extensively studied by first depositing thin Mg layers and then oxidizing the Mg layer either by natural oxidation or by plasma oxidation. Neither of these methods is successful in realizing high quality tunnel barriers. In particular, natural oxidation is ineffective at room temperature. Similarly, under the same conditions in which it is possible to plasma

oxidize Al layers with thicknesses ranging from a few angstroms to several tens of angstroms, Mg layers are only poorly oxidized. More aggressive oxidation conditions (e.g., longer oxidation times, higher bias voltages or more intense oxygen plasmas) do not appear to help oxidize the Mg layer. The barriers were usually electrically shorted, as if either an incomplete magnesium oxide layer (if any) was formed, or the MgO layer formed was too thin or not continuous. For example, it is possible that the surface of the Mg layer formed an oxide, which then prevented the Mg layers underneath from oxidizing. Most of these experiments were carried out using shadow masked junctions which requires relatively thick barriers to develop enough resistance across the barrier for reliable measurements of the junction's electrical properties. Limited studies of thinner barriers were carried out using lithographic processing of micron sized junctions to explore much thinner Mg layers. These studies also gave rise to electrically shorted junctions. Thus, it appears that using conventional means to form MgO tunnel barriers do not lead to useful structures.

Following these experiments, studies were carried out in which the MgO tunnel barrier was formed by reactive sputtering of Mg using oxygen or argon-oxygen plasmas onto various ferromagnetic electrodes, including those made of Fe and Co-Fe alloys. These experiments showed that a tunnel barrier could be formed, but that the TMR of the MTJs was always very small or, depending on the ferromagnetic electrode, was negative in sign (i.e., the resistance was higher for the parallel configuration compared to the anti-parallel configuration of the ferromagnetic electrodes). During the process of forming the MgO tunnel barrier, it seemed very likely that the surface of the lower ferromagnetic electrode became oxidized, thereby reducing the TMR when the electrode was formed

from Co-Fe or Ni-Fe alloys. Moreover, the resistance of the tunneling barrier was also increased, consistent with the formation of an insulating oxide at the surface of the lower ferromagnetic electrode which increased the effective tunnel barrier thickness.

To prevent the oxidation of a lower electrode formed from Fe, a method of forming the MgO barrier was developed in which a thin layer of metallic Mg was first deposited on top of the Fe layer and then a layer of MgO was deposited on top of this Mg layer through the reactive sputtering of Mg in an Ar-O_2 plasma. Using this method of preparing the MgO barrier, very high tunneling magnetoresistance values were obtained, much higher than any previously reported values for any MTJ at room temperature. Figure 2A illustrates this process, in which a tunnel barrier 120 is formed by first depositing a thin Mg layer 122 followed by deposition by reactive sputtering of an MgO layer 124. As shown in Fig. 2B and discussed in more detail below, it is more appropriate to view the MgO tunnel barrier as a single layer 120', since the layer 122 is oxidized to form MgO, with the layers 122 and 124 becoming largely indistinguishable as a result. For example, the layers 122 and 124 are not distinguishable in a cross-sectioned slice of the device examined in a transmission electron microscope. Figure 2A shows a device that includes a substrate 111, a bottom electrical lead 112, an antiferromagnetic layer 116, a fixed ferromagnetic layer 118, a "free" ferromagnetic layer 134, and a top electrical lead 136, all of which are similar to their counterparts 11, 12, 16, 18, 34, and 36, respectively; these layers, as well as other layers and components referred to herein, may be constructed using techniques known to those skilled in the art. The arrows 180 and 190 illustrate possible orientations of the magnetic moments of the free ferromagnetic layer 134 and the fixed ferromagnetic layer 118, respectively. As shown

in Figs. 2A and 2B, the fixed ferromagnetic layer may actually be a bilayer 115 of two different ferromagnetic layers 118 and 119, each having a magnetic moment oriented as indicated by the arrows 190 and 191, respectively. The bilayer 115, the antiferromagnetic layer 116, and the bottom lead 112 of Figs. 2A and 2B constitute a lower electrode 110.

Figure 3 shows the detailed dependence of resistance and TMR on the thickness of the Mg layer 122 for a series of otherwise nominally identical MTJs with a structure formed from 75 Å Ta/ 250 Å $Ir_{26}Mn_{74}$/ 8 Å $Co_{84}Fe_{16}$/ 18 Å Fe/ t Mg/ 18 Å MgO/ 200 Å $Co_{84}Fe_{16}$/ 100 Å Ta, in which the thickness of the Mg layer t is indicated in angstroms. The MgO layer was formed by reactive sputtering of Mg in a 93 % Ar-7% O_2 gas mixture. The Mg thickness was varied from 0 to approximately 20 Å (data only shown in Fig. 3 for thicknesses up to 12 Å). As shown in Fig. 3, TMR values of more than 90% are obtained at room temperature for Mg layer thicknesses of ~6 to 7 Å. For Mg layers thicker than this optimal thickness, the TMR decreases slowly for increasing Mg layer thickness, and the resistance of the junction is only weakly dependent on Mg thickness. Below this optimal thickness, the TMR is suppressed and the resistance is much increased by more than an order of magnitude. In the absence of the Mg layer 122, the TMR is small due to oxidation of the Fe underlayer. In order to prevent the oxidation of the Fe surface, it was found that a layer of Mg at least 5 to 6 angstrom thick should be deposited. Presumably, thinner Mg layers do not completely cover or wet the Fe surface, thereby allowing some oxidation of this surface. The dependence of the resistance of the tunnel junction on the Mg metal layer thickness is a very useful criterion for determining the optimum thickness of this layer. The resistance of the junction rapidly increases

when this layer is reduced below the optimum thickness, because the lower ferromagnetic electrode becomes oxidized.

The preferred range of thickness of the Mg layer 122 is from about 3 to 20 Å, more preferably from about 3 to 10 Å, and still more preferably from about 4 to 8 Å. The lower thickness is determined by the wetting of the Mg on the ferromagnetic layer 119. If a thinner Mg layer can be formed on this lower ferromagnetic electrode so that it completely covers the ferromagnetic layer with an approximately uniform thickness, then thinner Mg layers can be used. For example, the use of surfactants, such as oxygen, Ag, Pb, Bi, Sb and so on, are known to aid in the formation of ultra thin and smooth metallic layers. Thus, by using a surfactant, thinner Mg layers may be formed which cover completely the lower ferromagnetic layer and, therefore, the minimum thickness of Mg required to prevent oxidation of the lower ferromagnetic electrode is reduced.

As first shown by Parkin (see US Patent 5,764,567) the introduction of thin non-magnetic metallic layers between the ferromagnetic electrodes and the tunneling barrier in MTJs leads to a rapid decrease of the TMR. By contrast, for the case of Mg layers (which are metallic), very high TMR values are observed. The reason is that the Mg layer 122 is oxidized during the subsequent deposition of the MgO layer 124. This is confirmed by cross-section transmission electron microscopy (XTEM) studies, which show no obvious distinction between the Mg layer 122 and the MgO layer 124, so that effectively a single layer of MgO 120' is formed. Moreover, these XTEM studies reveal that the MgO layer 120' that is formed is not only crystalline, but is crystallographically oriented with respect to the lower Fe electrode 118. (By contrast, Al_2O_3 tunnel barriers are usually amorphous and without any crystallographically ordered structure except

under very special circumstances.) The thickness of the resulting MgO layer 120' is preferably in the range of 3-50 angstroms, more preferably 3-30 angstroms, still more preferably 3-20 angstroms, and most preferably 4-15 angstroms.

The lower ferromagnetic electrode for the samples whose data is shown in Fig. 3 is preferably grown on top of Ta (layer 112) and IrMn (layer 116). The IrMn is an antiferromagnetic layer and is used to exchange bias the lower ferromagnetic electrode. (Alternatively, Pt-Mn may be used.) The preferred composition of the Ir_xMn_{1-x} is when the Ir content is between 10 and 30 atomic percent. This composition range is chosen so that thin films of the Ir-Mn alloy are antiferromagnetic with blocking temperatures well above the operating temperature range of the tunnel junction device. The layer 112 can be formed from Ta or TaN or from Ta layers including lesser amounts of nitrogen. The layer 112 can also be formed from a bilayer of TaN and Ta. Ta, TaN, and a TaN/Ta bilayer are advantageous since layers of IrMn (or PtMn) deposited on top of them are (100) oriented. Similarly, Ti and TiN layers or TiN/Ti bilayers, can also be used to give (100) oriented layers of IrMn (or PtMn). The layer 112 may also incorporate a layer of MgO which typically grows textured in the (100) orientation and so can help improve the (100) texture of the IrMn layer 116.

Growth of IrMn on Ta leads to a (100) growth texture for the face-centered cubic (fcc) IrMn layer. The fcc lattice may be slightly distorted due to in-plane compression or expansion of the fcc lattice. The lower ferromagnetic electrode may be formed from a bilayer 115 of $Co_{84}Fe_{16}$ (layer 118) and Fe (layer 119). The $Co_{84}Fe_{16}$ layer 118 grows (100) oriented on top of the (100) textured IrMn layer 116. Then the Fe layer 119, which is grown on top of the (100) oriented $Co_{84}Fe_{16}$ layer 119, is bcc and also grows (100)

oriented. By preparing a (100) oriented bcc template layer of Fe, the MgO deposited on top of this layer also grows (100) oriented. Thus, for this combination of layers, the MgO barrier 120' that is formed also grows textured in the (100) direction, thereby leading to high TMR. By changing the layer 112 or by changing the antiferromagnetic layer 116, the texture of the lower ferromagnetic electrode can be varied. For example, by using Ta/Pt or Ta/Al or Ta/Pd or Ti/Pd as layers 112, the IrMn layer grows textured in the (111) orientation, whereas layers 112 of TaN/Ta, Ta or Ti lead to (100) textured IrMn. The texturing of these layers can be varied by varying their thicknesses or growth temperature. For the samples of Fig. 3, all the layers were deposited at nominally room temperature, although the ambient temperature at the substrate position within the sputter deposition system is typically a little higher than room temperature because of the considerable energy injected into the magnetron plasma sources. Thus, the temperature at the substrates is likely in the range of 40 to 50 °C.

By changing the texturing of the IrMn layer 116 from (100) to (111), by changing the layer 112 from, for example, Ti to, for example, a bilayer formed from Ti and Pd layers, the TMR of the resulting MTJ is considerably reduced from values of between ~40 and ~70% to much lower values of between 25 and 35%. These TMR values correspond to the as deposited MTJs. As discussed below, these TMR values can be considerably increased by thermal treatments. Moreover, the TMR of the as-deposited MTJs is likely reduced because the magnetic moment of the pinned layer 118 is not well oriented because the exchange bias provided by the antiferromagnetic layer 116 usually requires a thermal treatment to make it most effective. When the IrMn layer grows in the (111) texture, the $Co_{84}Fe_{16}$ or Fe layers grown on top of the IrMn layer grow bcc but are

oriented in the (110) crystallographic direction. The MgO layer also grows in the (110) texture. The different texturing of the MgO layer and the underlying ferromagnetic electrode, whether (100) or (110), which is dependent on the layers onto which the IrMn layer is grown, clearly influences the magnitude of the TMR effect. Thus the (100) texturing of the MgO layer and underlying ferromagnetic electrode can be very important in forming MTJs with high TMR.

It is important that the interface between the underlying ferromagnetic layer 119 and the MgO tunnel barrier 120 is free of ferromagnetic oxide. If the Mg layer 122 is not thick enough or is rough (for example, if the deposition temperature is too high) so that there are thin regions within the Mg layer, then the ferromagnetic layer may become oxidized during the formation of the layer 124. The oxidation of the lower ferromagnetic layer will result in a diminished tunneling magnetoresistance (compared to the case in which the ferromagnetic layer is free of oxide), which cannot be significantly improved by subsequent thermal treatments. Studies were carried out in which, after the ferromagnetic layer 119 is deposited, oxygen is introduced into the deposition chamber. The introduction of oxygen, even at much lower gas pressures than used for the reactive deposition of the MgO layer 124, results in reduced values of tunneling magnetoresistance for Co-Fe and Ni-Fe and Co-Ni-Fe alloys.

A second advantageous step in obtaining MTJs with high TMR values is to thermally anneal the MTJ after forming the structure shown in Fig. 2B. Typical results are shown in Fig. 4 for an MTJ with a lower electrode 110 formed from TaN (layer 112) 100 Å thick, a 250 Å thick $Ir_{25}Mn_{75}$ layer 116, an 8 Å thick $Co_{84}Fe_{16}$ layer 118, and a 18 Å thick Fe layer 119. The tunnel barrier 120' is formed by depositing a 7 Å thick Mg

layer 122 followed by a 16 Å thick MgO layer 124. The MgO layer 124 is formed by reactive sputtering from a metallic Mg target in an argon--oxygen gas mixture. The sputtering gas is predominantly formed from argon, with oxygen being in the range of 1.5 to 9% by volumetric flow of gas at standard temperature and pressure. Thus this corresponds to the relative molecular percentage of the components in the gas mixture. The oxygen partial pressure is kept sufficiently low to prevent "poisoning" of the metallic Mg sputtering target but is sufficient to form a fully oxidized MgO layer. Poisoning of the target can lead to irreproducible deposition rates especially when the same target is used to form both the Mg layer 122 and the MgO layer 124. Conditioning of the target between depositing the Mg and MgO layers is very helpful in obtaining reproducible results. Conditioning may be carried out by pre-sputtering the target either in argon prior to deposition of the Mg layer 122 or in argon-oxygen prior to deposition of the MgO layer 124. The optimum concentration of oxygen in the sputtering gas depends on the detailed geometry and size of the deposition chamber, the pumping speed of the vacuum pumps attached to the system, as well as the power applied to the Mg sputtering source. The deposition rate of the MgO will be influenced by the power applied to the Mg sputter gun as well as the oxygen concentration in the sputter gas, and the sputtering gas pressure, as well as geometric factors such as the distance from the sputter source to the substrate. Typically, it is preferred to use the smallest possible amount of oxygen not only to prevent contamination of the deposition chamber and other sputtering targets in the chamber but also because the thermal stability of the MgO tunnel barrier is influenced by small amounts of excess oxygen in or on top of this layer.

Finally, the ferromagnetic layer 134, which acts as the counter electrode of the MTJ for the samples used in collecting the data shown in Fig. 4, was formed from a 100 Å thick $Co_{84}Fe_{16}$. The capping layer 136 (which acts as the top electrical lead) is formed from a 100 Å thick Ta layer.

Fig. 4 shows TMR data measured on two different shadow masked MTJs at 25 °C after the MTJ has been annealed at a sequence of increasing anneal temperatures. The magneto-transport properties of ten different shadow masked magnetic tunnel junctions on one wafer are first measured at 25 °C. The wafer is then heated in the presence of a magnetic field large enough to fully saturate the magnetization of the pinned layer 115 to an anneal temperature T_A and then annealed at this temperature for 15 minutes in the presence of this magnetic field. The sample is subsequently cooled back down to 25 °C in the presence of the same magnetic field. For the data in Fig. 4, a field of 4,000 Oe was used and the sample was annealed in a high-vacuum anneal furnace that has a base pressure of $5x10^{-8}$ Torr. During annealing the pressure is increased in the anneal furnace to ~$1x10^{-7}$ Torr due to out-gassing within the furnace. This procedure is repeated for a series of anneal temperatures. Fig. 4 summarizes the magnitude of the tunneling magnetoresistance and the resistance of two different shadow masked tunnel junctions at 25 °C after anneal treatments for anneal temperatures up to 400 °C. As shown Fig. 4, the resistances of the two junctions, which have a nominal area of ~100x100 $(\mu m)^2$, are very similar and decrease slowly with increasing anneal temperatures up to ~320 °C. Over the same anneal temperature range their TMR values increase steadily up to about 100-110%. As the anneal temperature is increased further, the resistance of one junction continues to decrease slowly and the TMR continues to increase slowly for T_A up to ~370

°C, where the TMR attains a value of nearly 125%. The second junction also displays a TMR of a similar magnitude after being annealed at 390 °C, but at intermediate anneal temperatures both the resistance and TMR are substantially lowered. Surprisingly, at higher anneal temperatures the TMR and resistance recover. The non-monotonic dependence of TMR and resistance on anneal temperature for this second junction suggest that the junction partially breaks down but then remarkably repairs itself with additional annealing at higher temperatures. At anneal temperatures higher than 390 °C, the resistance and TMR of both junctions decreases. A sequence of successive anneals was carried out at 400 °C and high TMRs of more than 50% were maintained even after 6 hours of accumulated anneal time at this temperature.

During the deposition of the layer 124, the Mg layer 122 is exposed to oxygen and will become partially or completely oxidized, depending on the oxidation conditions and the thickness of the Mg layer 122. During the thermal anneal treatments the Mg layer may become further oxidized or the texture of this layer or the crystallographic order of this layer may improve. In any case, the layer 122 will essentially be oxidized to form MgO so that the layers 122 and 124 will become largely indistinguishable. This is illustrated in Fig. 2B where layers 122 and 124 are shown as a single layer 120'. Cross-section transmission electron microscopy of a completed MTJ structure confirms that the Mg layer 122 has been substantially converted to MgO, and that this layer is not distinct from the layer 124 either in composition or texture.

Both the free ferromagnetic layer 134 and the pinned lower ferromagnetic layer 115 can be formed from a single layer of homogeneous ferromagnetic material or, alternatively, from two or more layers of different ferromagnetic metals. In the latter

case, using a bilayer for the lower ferromagnetic electrode (layers 118 and 119) allows for the independent optimization of the exchange bias field and the magnitude of the tunneling magnetoresistance effect. The MTJ devices used in the collection of the data shown in Fig. 4 have a lower ferromagnetic electrode 115 formed from a bilayer of 8 Å $Co_{84}Fe_{16}$ / 18 Å Fe. The Co-Fe layer 118 gives a higher exchange bias with the IrMn antiferromagnetic layer than by having Fe directly at the IrMn interface. The Fe layer 119 is used to give higher TMR values in the as-deposited sample although after anneal treatments the magnitude of the TMR is similar for both $Co_{84}Fe_{16}$ and Fe layers at the interface between the layer 115 and the MgO tunnel barrier 120'. However, the lower electrode 115 can also be formed solely from Fe, and high TMR values similar to those shown in Fig. 4 are also obtained (although typically with lower exchange bias fields).

The MTJs in Fig. 4 have a free ferromagnetic layer 134 formed from $Co_{84}Fe_{16}$. Typically, lower TMR values are obtained when the counter electrode 134 is formed solely from Fe or with an Fe layer at the MgO/free ferromagnetic layer interface. Moreover, the thermal stability of such structures is also reduced.

The pinned ferromagnetic layer 115 can be formed from various Co-Fe alloys. In particular, the pinned ferromagnetic layer 115 can be formed from a single layer of Co-Fe without any Fe layers being present. Fig. 5 shows typical TMR and resistance data at 25 °C versus anneal temperatures up to 400 °C for MTJs with $Co_{84}Fe_{16}$ pinned ferromagnetic layers. These MTJs have lower electrodes 110 formed by first depositing layers of 100 Å thick TaN (layer 112) followed by exchange bias layers of 250 Å thick IrMn (layer 116). The pinned ferromagnetic electrode is formed from a single layer of 26 Å $Co_{84}Fe_{16}$ (layer 118; there is no separate layer 119 in this case). The tunnel barrier 120' is formed

by first depositing a layer of Mg metal 8 Å thick (layer 122) and an MgO layer by reactive sputtering of Mg in an Ar-5 % O_2 gas mixture (layer 124). The free ferromagnetic layer is formed from 200 Å $Co_{84}Fe_{16}$ (layer 134) and the capping layer 136 is formed from 100 Å Ta.

Data for three nominally identical shadow masked junctions are shown in Fig. 5. The resistances of the three junctions vary by about a factor of two partly because of variations in the junction areas and partly because of small variations in Mg and MgO thicknesses across the substrates on which the MTJs are formed. Just as for the samples shown in Fig. 4, the TMR increases significantly on annealing. The TMR reaches a value of ~125% at 25 °C following a sequence of anneals at temperatures up to 400 °C. Thus, these MTJs display remarkable thermal stability and are much more thermally stable than MTJs formed with prior art MTJs with Al_2O_3 tunnel barriers. The thermal stability of these MTJs with $Co_{84}Fe_{16}$ fixed ferromagnetic layers is improved over MTJs with CoFe/Fe fixed ferromagnetic layers. However, just as for the MTJs with CoFe/Fe fixed layers, occasionally the resistances of some of these MTJ devices show non-monotonic variations in resistance and TMR with increasing anneal temperature. This behavior is most likely associated with some sort of defect or defects in the barriers which self-heal in subsequent anneals.

The maximum TMR values obtained after annealing for the data shown in Figs. 4 and 5 are nearly 125%. By optimizing the structure, growth and annealing conditions TMR values of more than 160% are found at room temperature. In particular, by reducing the thickness of the Mg layer 122, slightly higher TMR values are observed. Resistance versus field curves for typical samples displaying TMR values of more than

140% and 160% are shown in Figs. 6 and 7, respectively. These TMR values were obtained after annealing these samples to 360 and 380 °C, respectively. The higher TMR value for the sample whose data is shown in Fig. 7 is most likely a result of the higher annealing temperature to which it could be subjected, whereas the sample of Fig. 6 degraded significantly when it was annealed above 360 °C. Thus, there is some variation from sample to sample in thermal stability. This is most likely because these data are taken on MTJ samples prepared using shadow masks which means that the edges of the samples are exposed to air when removed from the sputter deposition system and during the annealing studies. Since the time between the deposition of these samples and the time when the annealing studies were carried out differs from sample to sample, there is the possibility of different exposures of the edges of the layers in the various MTJs to air and, in particular, to water in the air. MgO is hygroscopic and easily degrades in the presence of water to form a hydroxide which is much less thermally stable. In actual devices the MTJ and the MgO are likely encapsulated by an oxide or other protective material.

The two samples corresponding to the data in Figs. 6 and 7 have very similar structures with the exception of slightly different MgO barrier thicknesses. In particular, the layers 112 are formed from 100 Å TaN, in which the Ta was formed by reactive sputtering of Ta in an Ar-2% N_2 sputter gas mixture. The nitrogen content was deliberately chosen to be less than the N_2 content required to obtain stoichiometric TaN, because N deficient TaN layers can improve the (100) texture of fcc layers grown on top of them. The antiferromagnetic layer 116 was formed from 250 Å $Ir_{25}Mn_{75}$ and the pinned ferromagnetic layer was formed from a bilayer of 8 Å $Co_{84}Fe_{16}$ (layer 118) and 30

Å $Co_{70}Fe_{30}$ (layer 119). The barrier was formed by first depositing a layer of Mg ~5 Å thick (layer 122), followed by a MgO layer (layer 124) formed by reactive sputtering of Mg in an Argon-3% O_2 gas mixture. In Fig. 6 the barrier was formed from an MgO layer (124) ~24 Å thick, whereas in Fig. 7 the MgO layer (124) was ~20 Å thick. The resistance-area (RA) product for the sample with the thicker MgO layer ~64 $M\Omega(\mu m)^2$ was correspondingly significantly higher, whereas the RA product for the sample with the thinner MgO layer ~200 $k\Omega(\mu m)^2$ was much lower. Extensive studies were carried out to measure the RA versus Mg layer and MgO thickness. The RA product increases approximately exponentially with the thickness of the MgO tunnel barrier. Notwithstanding the considerable difference in RA values of the two samples of Fig. 6 and 7, the TMR values and the variation of TMR on annealing is very similar. The detailed dependence of TMR on anneal temperature (for the sample whose resistance versus field curves are shown in Fig. 7) is shown in Fig. 8. The free ferromagnetic layer 134 was formed from 150 Å $Co_{84}Fe_{16}$ in both cases, but the capping layer 136 was formed from 125 Å TaN for the sample with the thicker MgO barrier (Fig. 6) and from 100 Å Mg for the sample with the thinner MgO barrier (Fig. 7). The TaN layer for the capping layer was formed by reactive sputtering of Ta in an Argon-10% N_2 mixture, which gives rise to a nearly stoichiometric TaN compound. Studies suggest that such a capping layer has higher thermal stability than layers with lower N_2 content.

As shown in Fig. 8, whereas the TMR significantly increases with anneal temperature, the resistance of the MTJ measured when the magnetic moments of the free and pinned ferromagnetic layers are parallel (R_P) is comparatively insensitive to anneal temperature, varying by no more than ~30%. The detailed dependence of R_P on anneal

temperature is sensitive to the Mg layer thickness, in particular, but is also sensitive to details of the MTJ structure and composition.

Fig. 9 shows the variation of TMR and resistance-area product with temperature, for temperatures between 325K and 4K, for both the parallel (R_P) and anti-parallel (R_{AP}) orientations of the free and pinned ferromagnetic layers (for the same sample for which data is shown in Figs. 7 and 8). As shown in Fig. 9, the TMR increases significantly as the temperature is lowered and almost doubles on cooling from 300K to 4K. Over the same temperature range, the resistance for the parallel state hardly changes at all, but the resistance in the anti-parallel state increases substantially. It is the increase in R_{AP} that largely accounts for the increase in TMR as the temperature is reduced. For similar MTJs with prior art Al_2O_3 tunnel barriers, the TMR increases by a factor of about 1.5 over the same temperature range. The increase in TMR is usually attributed to the temperature dependence of the interface magnetization, which is likely to be stronger than that of the bulk magnetization. The larger fractional increase in TMR for MTJs with MgO compared to prior art Al_2O_3 tunnel barriers may suggest that the interface magnetization has a stronger temperature dependence for MgO barriers. If this is the case, this would suggest that improved ferromagnetic/ MgO interfaces would lead to even higher TMR values at room temperature. It is also possible that the strong temperature dependence of TMR could be attributed to defects in the tunnel barrier which might lead to relaxation of the spin of the tunneling electrons and so to diminished TMR. At lower temperatures, these defect mediated tunneling channels are likely to become less probable which could account for the increased TMR. Finally, the degree of AP alignment of the pinned and free ferromagnetic layer moments also will strongly influence the magnitude of the TMR.

The resistance versus field curves do show, as expected, that the exchange bias field does increase significantly as the temperature is reduced from 300 to 4K. Thus a greater degree of AP coupling could also account for the increased TMR values at lower temperatures.

The magnitude of the TMR is most sensitive to the nature of the layer 112. It seems very clear that the layer or layers 112 are preferably chosen so that the IrMn layer and the ferromagnetic pinned layers grow textured in the (100) orientation and that the ferromagnetic layer is preferably formed in the bcc crystal structure. High TMR values (compared to those possible with prior art Al_2O_3 tunnel barriers) are found for $Co_{1-x}Fe_x$ alloys with more than about 8 atomic % Fe or for pure Fe underlayers. Ni—Fe alloys which are fcc (e.g. for permalloy, $Ni_{81}Fe_{19}$) give TMR values no higher than those found for prior art Al_2O_3 tunnel barriers. The method for forming MgO tunnel barriers described herein can be used for a wide variety of ferromagnetic underlayers and capping layers, with TMR values typically at least as high as those found for prior art Al_2O_3 tunnel barriers for otherwise the same structures. However, significantly enhanced TMR values compared to those for prior art Al_2O_3 tunnel barriers are found only when the texture of the ferromagnetic layer 119 and that of the MgO tunnel barrier 120' is predominantly (100). There are a wide variety of layers which give rise to (100) texture, and many of these can be used with the method of formation of the MgO tunnel barrier described herein for forming MTJs with increased TMR compared to comparable MTJs with prior art Al_2O_3 barriers.

The preferred temperature for annealing MTJs with MgO tunnel barriers formed as described herein depends on the required TMR. The highest TMR values are found

for annealing temperatures in the range from 180 to 400 °C, with generally higher TMR values, the higher the anneal temperature. For temperatures significantly higher than 400 °C, the resistance of the MTJs and the TMR typically decreases. Depending on the application and the environment of the MTJ, the maximum anneal temperature to which the MTJ may be subjected may be limited by other components of the device in which the MTJ forms a part. For applications in magnetic tunnel junction memory elements for use as magnetic random access memories (see, for example, US Patent 6,226,160), the back end of line processing environment may need to withstand temperatures of between 250 and 400 °C. The high thermal stability of MTJs described herein makes MTJs with MgO barriers formed as described herein very attractive. For applications as the reading element in magnetic recording heads, the maximum temperature to which the recording head can be subjected during processing may be limited by components of the head other than the MgO tunnel junction read sensor. Thus, it may be preferable to subject the MgO tunnel junction device to an anneal treatment at a preferred temperature after it is formed prior to fabricating other components of the recording head at lower temperatures.

The method of deposition described herein is for deposition at nominally room temperature. However, any of the layer 112, the antiferromagnetic biasing layer 116, the lower ferromagnetic electrode 118 and 119 (if present), the Mg layer 122 and the MgO tunnel barrier 124 may be deposited at elevated temperatures for improving the crystallographic texture of the ferromagnetic layer 119 and the MgO tunnel barrier 120', for the purpose of increasing the TMR magnitude. Preferred deposition temperatures will depend on the detailed structure and composition of these layers. Thermal annealing may also improve the crystallographic texture of the MgO layer 120' and the surrounding

layers, so that the structure prior to annealing may not be substantially (100) oriented but after thermal anneal treatments in the temperature range described above the crystallographic texture becomes substantially (100) oriented.

The MgO layer 124 may be formed by various deposition methods in addition to reactive sputter deposition. Any method which delivers both Mg and oxygen in a sufficiently reactive state to form MgO during the deposition of the Mg and oxygen is suitable. For example, the Mg can be deposited by ion beam sputtering from a Mg target in the presence of oxygen generated from a source of atomic oxygen such as an rf or microwave source. Similarly, the MgO can be deposited by ion beam sputtering from a Mg target in the presence of reactive oxygen delivered from an ion-assist source. The MgO layer 124 can also be evaporated from a source of MgO, for example, by electron beam evaporation using a beam neutralizer, or by evaporation from a crucible or from a Knudsen source. The MgO layer 124 can also be formed by deposition from a MgO source in the presence of atomic oxygen provided by an rf or microwave source or any other source of sufficiently reactive oxygen. The MgO layer can also formed by pulsed laser deposition either by using a MgO target or a Mg target in the presence of sufficiently reactive oxygen. The MgO layer may also be formed by reactive sputtering from a Mg target using various sputtering gas mixtures, provided that oxygen is present. For example, Argon can be replaced by other rare gases, for example, Neon or Krypton or Xenon. The Mg in the underlayer 122 and the MgO layer 124 is ideally free of impurities; the Mg preferably contains less than 5 atomic % of impurities, and more preferably less than 1 atomic % of impurities, so as to not substantially affect the

tunneling properties of the MgO tunnel barrier, which would, for example, affect the TMR values of the corresponding magnetic tunnel junction.

The ferromagnetic layers herein (such as layers 115, 118, 119, and 134) can be formed from any ferromagnetic or ferrimagnetic metal or indeed any ferromagnetic or ferrimagnetic material which is sufficiently conducting. In particular, these layers can be formed from ferrimagnetic metals such as Fe_3O_4, or from metallic ferromagnetic oxides such as oxides from the perovskite family, including the family of ferromagnetic manganites such as $La_{1-x}Sr_xMnO_3$. Likewise, these layers can also be formed from various half-metallic ferromagnetic metals including CrO_2, the half-Heusler alloys such as NiMnSb and PtMnSb, and other ferromagnetic Heusler and half-Heusler alloys.

The structure illustrated in Fig. 2B contains an antiferromagnetic layer 116 but MTJs for memory or magnetic field sensing applications can be formed without the layer 116. The moment of the lower ferromagnetic electrode can be fixed by a variety of methods including the use of magnetically hard ferromagnetic materials such as described in US Patent 5,936,293 to Parkin. It is also clear that the exchange biased ferromagnetic electrode can be formed on top of the MgO barrier 120' with the free ferromagnetic layer below the MgO barrier.

It may also be preferred to form one or both of the ferromagnetic electrodes 119 and 134 from sandwiches of two antiferromagnetically coupled ferromagnetic layers for the purposes of reducing the stray magnetostatic fields from the edges of the ferromagnetic electrodes. As described in US Patents 5,465,185 to Parkin et al. and 6,153,320 to Parkin, this can be accomplished by forming the electrodes 115 and 134 from sandwiches of two thin ferromagnetic layers separated by thin layers of Ru or Os or

an alloy of Ru and Os, in which each of these thin ferromagnetic layers can be formed from a multiplicity of ferromagnetic layers.

Extensive studies were carried out to explore the dependence of TMR on the thickness of the MgO tunnel barrier 120'. High TMR well above 100% was found for a wide range of MgO barrier thicknesses corresponding to RA values ranging from below ~80 $\Omega(\mu m)^2$ to more than 10^9 $\Omega(\mu m)^2$. Studies were carried out to determine the lowest possible RA values. The smallest RA values were obtained by depositing the thinnest possible Mg layers 122 and the thinnest possible MgO layers 124. RA values as low as ~1 $\Omega(\mu m)^2$ were obtained for Mg layers in the range of 4 to 5 Å and for MgO layers 124 in the range of 1-4 Å. However, for these ultra-low RA values reduced TMR was observed with TMR values in the range of 25 to 30%. As described in US Patent 6,349,289 to Parkin, magnetic tunnel junction based recording read heads for future generation ultra high density magnetic recording disk drives require extremely low RA tunnel barriers with reasonable TMR values. The method of preparing MgO tunnel barriers 120' described in this patent may be extremely useful for such applications.

The method of producing high quality MgO tunnel barriers without oxidizing the underlayer has been described particularly with reference to the use of such barriers in magnetic tunnel junctions. The method of preparing MgO tunnel barriers described herein can be applied to a wide variety of tunnel junction devices in which one or the other or both of the metal layers on either side of the MgO tunnel barrier do not need to be ferromagnetic. Illustrations of such structures are shown in Fig. 10. Fig. 10A shows a tunnel junction device in which the upper electrode is formed from a non-magnetic metal layer 134' adjacent to the MgO tunnel barrier 120'. The lower electrode is formed

from an exchange biased ferromagnetic layer. The tunneling current is passed through the device as shown by the arrow 202 and is spin polarized by the ferromagnetic layer 119. Fig. 10B illustrates a similar device in which the lower ferromagnetic electrode is formed without the antiferromagnetic exchange bias layer. Such a structure may be useful as part of a magnetic tunnel transistor (MTT). The MTT is a three terminal device typically formed from a magnetic tunnel junction married to a semiconductor collector where the semiconductor can be formed from, for example, GaAs or Si. The MgO tunnel barriers described herein may be grown directly on GaAs or on underlayers that include GaAs. One ferromagnetic electrode in the MTJ forms the emitter, and the other ferromagnetic layer forms the base of the three terminal device between the tunnel barrier of the MTJ and the semiconducting collector. The MTJ component of the MTT could be formed as described herein with a MgO tunnel barrier. However, it may also be advantageous for certain applications that the emitter of the magnetic tunnel transistor be formed from a non-magnetic metal according to the structure shown in Fig. 10B.

Fig. 10C illustrates a tunnel junction device where the lower electrode is formed from a non-magnetic metal layer 112'. This layer may be formed from more than one metal layers including the possibility that the layer 112' may contain ferromagnetic layers not immediately adjacent to the MgO tunnel barrier 120'. Again this type of structure may be useful as part of a MTT where the emitter of the MTT is ferromagnetic but the base layer is non-magnetic.

For the structures illustrated in Figs. 10A, B and C, in which there is only one ferromagnetic electrode, the current from the ferromagnetic electrode will nevertheless be spin-polarized. The magnitude of the spin polarization of the tunneling current can be

measured using the superconducting tunneling spectroscopy technique by replacing the non-magnetic metal electrode 134' or 112' with a superconducting electrode such as Al or Si or Cu doped Al. The polarization of the tunneling current can be inferred from conductance versus bias voltage curves measured at very low temperatures (0.25K), well below the superconducting order temperature of the Al layer, and in the presence of large magnetic fields (in the range of 2 Tesla) applied in the plane of the superconducting electrode. The magnetic field Zeeman splits the quasi-particle density of states in the superconductor providing for spin polarized states into which the electrons tunnel. By fitting the conductance versus bias voltage curves the spin polarization of the tunneling electrons can be inferred with high precision. This method was originally developed by Merservey and Tedrow (Physics Reports **238**, 173 (1994)) and has been extensively used to study the spin polarization of tunneling electrons in magnetic tunneling junctions with Al_2O_3 tunnel barriers. Spin polarization values are typically no higher than ~40 to 50%. By contrast, values of spin polarization measured using the STS method for MgO junctions prepared according to the methods described herein are significantly higher and exceed 76%. Thus the structures illustrated in Fig. 10A, B and C can be prepared with very high quality MgO tunnel barriers and extremely high values of spin polarized electrical current.

Fig. 10D shows an example of a metal-insulator-metal (MIM) tunnel junction device. As illustrated in Fig. 10D, the MIM structure contains no ferromagnetic metals on either side of the tunnel barrier. The electrodes 112' and 134' may be formed from one or more metal layers. MIM structures have many applications, for example, capacitors for storing charge or as non-linear elements in electrical circuits. MIM

devices may be used as voltage controlled switches if they are sufficiently non-linear. For example, at low voltage the resistance is high but at higher voltages the resistance is substantially reduced because of the non-linear characteristics of the tunnel barrier. The metal layers 112' and 134' can be formed from metals such as Cu, Al, W, W-Ti, RuO_2 or IrO_2 or Ir, Pt or Pd, as well as TaN, Ta, TiN or Ti. The structure illustrated in Fig. 10D may also be useful for superconducting devices in which one or both of the electrodes 112' and 134' may be formed from superconducting layers. For example, one or both of these layers could be formed from Nb or NbN.

While the ferromagnetic layer is preferably in direct contact with the MgO tunnel barrier 120', it is also possible to separate the ferromagnetic electrode and the tunnel barrier by a thin spacer layer, providing that the spacer layer does not significantly diminish the spin polarization of the electrons tunneling through the tunnel barrier 120'. Fig. 11 illustrates a thin spacer layer 225 between the tunnel barrier 120' and the free ferromagnetic layer 134 in the magnetic tunnel junction device of Fig. 2B. As described in US Patent 5,764,567 to Parkin with reference to magnetic tunnel junction devices formed with alumina tunnel barriers, the ferromagnetic electrodes in such MTJs can be separated from the tunnel barrier by thin spacer layers formed from Cu and other non-magnetic metallic materials while maintaining significant tunneling magnetoresistance. The types of non-magnetic metallic materials which are preferred are those which display large values of giant magnetoresistance in metallic spin-valve structures or in metallic magnetic multilayers. These include Ag and Au as well as Cu. The non-magnetic spacer layer could also be formed from a metallic oxide layer such as RuO_2 or a Sr-Ru oxide. As illustrated in Fig. 11, the free ferromagnetic layer 134 and the spacer layer 225

comprise an overlayer. Generally, the magnetic tunnel junction will include an overlayer formed on top of the MgO tunnel barrier 120' which may be comprised of one or more ferromagnetic layers with or without a non-magnetic spacer layer, or, more generally, from a multiplicity of ferromagnetic and non-ferromagnetic, non-ferrimagnetic layers. Similarly, the magnetic tunnel junction will include an underlayer beneath the MgO tunnel barrier 120' which may be comprised of one or more ferromagnetic layers with or without a non-magnetic spacer layer (e.g., spacer layer 226), or, more generally, from a multiplicity of ferromagnetic and non-ferromagnetic, non-ferrimagnetic layers.

While the method of forming an improved MgO tunnel barrier has been described with respect to the formation of MgO barriers on polycrystalline underlayers, the method can also be used for the formation of improved MgO tunnel barriers on crystalline underlayers prepared on crystalline substrates such as various facets of MgO or sapphire single crystals.

While the present invention has been particularly shown and described with reference to the preferred embodiments, it will be understood by those skilled in the art that various changes in form and detail may be made without departing from the spirit and scope of the invention. Accordingly, the disclosed invention is to be considered merely as illustrative and limited in scope only as specified in the appended claims.

What is claimed is:

1. A method, comprising:

depositing Mg onto a surface of an underlayer to form a Mg layer thereon, wherein the surface is selected to be substantially free of oxide; and

directing additional Mg, in the presence of oxygen, towards the Mg layer to form a MgO tunnel barrier in contact with the underlayer, the oxygen reacting with the additional Mg and the Mg layer.

2. The method of Claim 1, wherein the thickness of the Mg layer is selected to be large enough to prevent oxidation of the underlayer but small enough that, upon reaction of the oxygen with the Mg layer, substantially all the Mg in the Mg layer is converted into MgO.

3. The method of Claim 1, further comprising annealing the MgO tunnel barrier to improve its performance.

4. The method of Claim 1, wherein the Mg layer is deposited in the absence of substantial amounts of reactive oxygen, the Mg layer being oxidized as the MgO tunnel barrier is formed.

5. The method of Claim 1, further comprising providing a source of MgO that acts as a source of both oxygen and the additional Mg.

6. The method of Claim 1, wherein the oxygen includes ionized oxygen.

7. The method of Claim 1, wherein the oxygen includes atomic oxygen.

8. The method of Claim 1, wherein oxygen is provided by a rare gas-oxygen plasma.

9. The method of Claim 8, wherein the rare gas includes argon.

10. The method of Claim 1, wherein the MgO tunnel barrier has a thickness of between 3 and 50 angstroms.

11. The method of Claim 1, wherein the additional Mg is provided by at least one of the following techniques: reactive sputtering, ion-beam sputtering, evaporation, pulsed laser deposition, and molecular beam epitaxy.

12. The method of Claim 1, wherein the Mg layer has a thickness of between 3 and 20 angstroms.

13. The method of Claim 1, wherein the Mg layer has a thickness of between 4 and 8 angstroms.

14. The method of Claim 1, wherein the underlayer includes a semiconductor.

15. The method of Claim 14, wherein the semiconductor is in direct contact with the MgO tunnel barrier.

16. The method of Claim 14, wherein the underlayer includes GaAs.

17. The method of Claim 1, wherein the underlayer includes a ferrimagnetic material.

18. The method of Claim 17, wherein the ferrimagnetic material is in direct contact with the MgO tunnel barrier.

19. The method of Claim 1, further comprising forming an overlayer on the MgO tunnel barrier, wherein the overlayer includes a ferrimagnetic material.

20. The method of Claim 1, wherein the underlayer includes a ferromagnetic material.

21. The method of Claim 20, wherein the ferromagnetic material is in direct contact with the MgO tunnel barrier.

22. The method of Claim 20, wherein the ferromagnetic material includes Fe.

23. The method of Claim 22, wherein the ferromagnetic material is bcc and substantially (100) oriented.

24. The method of Claim 20, wherein the ferromagnetic material includes an alloy of Fe and Co and the Fe content of the alloy is between 1 and 99 atomic %.

25. The method of Claim 24, wherein the alloy is bcc and substantially (100) oriented.

26. The method of Claim 20, further comprising forming an overlayer on the MgO tunnel barrier to form a magnetic tunnel junction, wherein the overlayer includes a ferromagnetic material.

27. The method of Claim 26, wherein the oxygen content is selected to increase the magnetoresistance of the magnetic tunnel junction.

28. The method of Claim 26, further comprising annealing the tunnel junction to increase its tunnel magnetoresistance.

29. The method of Claim 28, wherein the tunnel junction is annealed at a temperature selected to yield a tunnel magnetoresistance of greater than 100% at room temperature.

30. The method of Claim 28, wherein the tunnel junction is annealed at a temperature selected to yield a tunnel magnetoresistance of greater than 160% at room temperature.

31. The method of Claim 26, wherein the overlayer and the underlayer include ferromagnetic materials selected from the group consisting of i) Fe, ii) an alloy of Co and Fe, iii) an alloy of Ni and Fe, and iv) an alloy of Ni and Fe and Co.

32. The method of Claim 26, wherein the ferromagnetic materials are an alloy of Co and Fe, and the Fe content of the alloy is 10-20 atomic %.

33. The method of Claim 26, wherein the ferromagnetic material of the underlayer is bcc and is substantially (100) oriented.

34. The method of Claim 26, wherein the ferromagnetic material of the underlayer, the ferromagnetic material of the overlayer, and the MgO tunnel barrier are substantially (100) oriented.

35. The method of Claim 26, wherein at least one of the underlayer and the overlayer includes antiferromagnetic material that is exchange biased with the ferromagnetic material of said at least one layer, the antiferromagnetic material including at least one alloy selected from the group consisting of Ir-Mn and Pt-Mn, in which the alloy is substantially (100) oriented and is either fcc or slightly distorted fcc.

36. The method of Claim 26, wherein the underlayer includes antiferromagnetic material over at least one layer selected from the group consisting of Ta and TaN.

37. The method of Claim 26, wherein the MgO tunnel barrier is in direct contact with both the ferromagnetic material of the underlayer and the ferromagnetic material of the overlayer.

38. The method of Claim 1, comprising forming an overlayer on the MgO tunnel barrier, wherein one of the overlayer and the underlayer includes a non-ferromagnetic, non-ferrimagnetic metal layer, and the other of the overlayer and the underlayer includes a ferrimagnetic layer.

39. The method of Claim 1, comprising forming an overlayer on the MgO tunnel barrier, wherein one of the overlayer and the underlayer includes a non-ferromagnetic, non-ferrimagnetic metal layer, and the other of the overlayer and the underlayer includes a ferromagnetic layer.

40. The method of Claim 39, comprising constructing a magnetic tunneling transistor that includes the non-ferromagnetic, non-ferrimagnetic metal layer, the MgO tunnel barrier, and the ferromagnetic layer.

41. The method of Claim 39, wherein the non-ferromagnetic, non-ferrimagnetic metal layer includes a metal selected from the group consisting of Cu, W, Al, AlN, Nb, NbN, WTi, Ti, TiN, Ta, and TaN.

42. The method of Claim 39, wherein the ferromagnetic layer includes a ferromagnetic material selected from the group consisting of i) Fe, ii) an alloy of Co and Fe, iii) an alloy of Ni and Fe, and iv) an alloy of Ni and Fe and Co.

43. The method of Claim 39, wherein the ferromagnetic material and the MgO tunnel barrier are substantially (100) oriented, and the ferromagnetic material is bcc.

44. The method of Claim 1, comprising forming an overlayer on the MgO tunnel barrier, wherein the overlayer and the underlayer comprise respective non-ferromagnetic, non-ferrimagnetic metals.

45. The method of Claim 44, wherein the metals are selected from the group consisting of Cu, Al, AlN, W, Nb, NbN, Pt, Pd, Ir, RuO_2, Ru, and IrO_2.

46. A method, comprising:

constructing a magnetic tunnel junction that includes a MgO tunnel barrier, wherein the MgO tunnel barrier is formed by depositing Mg, in the presence of oxygen, onto a Mg layer substantially free of oxide.

47. The method of Claim 46, wherein oxygen is provided by a rare gas-oxygen plasma.

48. The method of Claim 46, wherein the Mg layer has a thickness of between 3 and 20 angstroms.

49. The method of Claim 46, further comprising annealing the magnetic tunnel junction to increase its magnetoresistance.

50. The method of Claim 49, wherein the tunnel junction is annealed at a temperature selected to yield a tunnel magnetoresistance of greater than 100% at room temperature.

51. The method of Claim 49, wherein the tunnel junction is annealed at a temperature selected to yield a tunnel magnetoresistance of greater than 160% at room temperature.

52. A method, comprising:

forming a layer of Mg;

providing an oxidizing atmosphere;

depositing Mg, in the presence of the oxidizing atmosphere, onto the Mg layer to form a MgO tunnel barrier.

53. The method of Claim 52, wherein the Mg layer is formed on a ferrimagnetic layer.

54. The method of Claim 52, wherein the Mg layer is formed on a ferromagnetic layer, the method further comprising forming a ferromagnetic layer on the MgO tunnel barrier to construct a magnetic tunnel junction.

55. The method of Claim 52, further comprising annealing the MgO tunnel barrier to improve its performance.

56. A method, comprising:

providing an underlayer having a surface that is substantially free of oxide;

forming a metal layer on the surface to both protect the underlayer from oxidation and to wet the underlayer; and

directing Mg and oxygen onto the metal layer to form a MgO tunnel barrier that is contact with the underlayer.

57. The method of Claim 56, wherein the underlayer includes at least one material selected from the group consisting of ferrimagnetic materials and ferromagnetic materials.

58. The method of Claim 56, wherein the metal layer includes Mg.

59. The method of Claim 56, further comprising annealing the MgO tunnel barrier to improve its performance.

60. A method, comprising:

forming a Mg layer of a preselected thickness on a surface of an underlayer to protect the underlayer from oxidation; and

directing oxygen and additional Mg towards the Mg layer so that the oxygen reacts with the Mg layer and the additional Mg to form a MgO tunnel barrier on the underlayer, wherein the thickness of the Mg layer is selected to be small enough that substantially all the Mg of the Mg layer reacts with oxygen to form MgO.

61. The method of Claim 60, wherein the surface is selected to be substantially free of oxide.

62. The method of Claim 60, further comprising forming an overlayer on the MgO tunnel barrier, wherein the overlayer and the underlayer each include ferromagnetic material, thereby forming a magnetic tunnel junction.

63. The method of Claim 60, further comprising forming an overlayer on the MgO tunnel barrier, wherein the overlayer and the underlayer each include at least one material selected from the group consisting of ferromagnetic materials and ferrimagnetic materials, thereby forming a magnetic tunnel junction.

64. The method of Claim 63, further comprising annealing the magnetic tunnel junction to increase its tunnel magnetoresistance.

65. A structure, comprising:

an underlayer having a surface that is substantially free of oxide formed from the underlayer;

a MgO tunnel barrier in contact with the surface of the underlayer; and

an overlayer, the MgO tunnel barrier being in contact with a surface of the overlayer, the MgO tunnel barrier being sandwiched between the underlayer and the overlayer.

66. The structure of Claim 65, wherein the surface of the overlayer is substantially free of oxide formed from the overlayer.

67. The structure of Claim 65, wherein at least one of the overlayer and the underlayer includes a spacer layer that is in contact with the MgO tunnel barrier, wherein the spacer layer does not substantially interfere with the tunneling properties of the MgO tunnel barrier.

68. The structure of Claim 65, wherein the MgO tunnel barrier has a thickness of between 3 and 50 angstroms.

69. The structure of Claim 65, wherein at least one of the underlayer and the overlayer includes a ferrimagnetic material.

70. The structure of Claim 65, wherein the overlayer and the underlayer include respective ferromagnetic materials that together with the MgO tunnel junction form a magnetic tunnel junction, and wherein:

i) the amount of any oxide separating the MgO tunnel barrier from the ferromagnetic materials is sufficiently low, and

ii) the MgO tunnel barrier, the underlayer, and the overlayer are sufficiently free of defects,

that the tunnel magnetoresistance of the magnetic tunnel junction is greater than 70% at room temperature.

71. The structure of Claim 70, wherein

i) the amount of any oxide separating the MgO tunnel barrier from the ferromagnetic materials is sufficiently low, and

ii) the MgO tunnel barrier, the underlayer, and the overlayer are sufficiently free of defects,

that the tunnel magnetoresistance of the magnetic tunnel junction is greater than 100% at room temperature.

72. The structure of Claim 70, wherein

i) the amount of any oxide separating the MgO tunnel barrier from the ferromagnetic materials is sufficiently low, and

ii) the MgO tunnel barrier, the underlayer, and the overlayer are sufficiently free of defects,

that the tunnel magnetoresistance of the magnetic tunnel junction is greater than 160% at room temperature.

73. The structure of Claim 70, wherein at least one of the underlayer and the overlayer includes antiferromagnetic material that is exchange biased with the ferromagnetic material of said at least one layer, the antiferromagnetic material including at least one alloy selected from the group consisting of Ir-Mn and Pt-Mn, in which the alloy is substantially (100) oriented and is either fcc or slightly distorted fcc.

74. The structure of Claim 70, wherein the underlayer includes antiferromagnetic material over at least one layer selected from the group consisting of Ta and TaN.

75. The structure of Claim 70, wherein the MgO tunnel barrier is in direct contact with the both the ferromagnetic material of the underlayer and the ferromagnetic material of the overlayer.

76. The structure of Claim 70, wherein the MgO tunnel barrier has a thickness of between 3 and 50 angstroms.

77. The structure of Claim 65, wherein the underlayer and the overlayer include respective non-ferromagnetic, non-ferrimagnetic metals.

78. The structure of Claim 65, wherein one of the underlayer and the overlayer includes a layer of ferromagnetic material, and the other of the underlayer and the overlayer includes a layer of non-ferromagnetic, non-ferrimagnetic metal.

79. The structure of Claim 78, wherein:

i) the amount of any oxide separating the MgO tunnel barrier from the underlayer and the overlayer is sufficiently low, and

ii) the MgO tunnel barrier, the underlayer, and the overlayer are sufficiently free of defects,

that the spin polarization of tunneling current passing through the structure is greater than 50%.

80. The structure of Claim 78,

i) the amount of any oxide separating the MgO tunnel barrier from the underlayer and the overlayer is sufficiently low, and

ii) the MgO tunnel barrier, the underlayer, and the overlayer are sufficiently free of defects,

that the spin polarization of tunneling current passing through the structure is greater than 70%.

81. The method of Claim 78, wherein the ferromagnetic material is in direct contact with the MgO tunnel barrier.

MgO Tunnel Barriers and Method of Formation

Abstract

MgO tunnel barriers are formed by depositing a thin layer of Mg on a suitable underlayer, and then directing oxygen and additional Mg towards the Mg layer. The oxygen reacts with the additional Mg and the Mg in the Mg layer to form a MgO tunnel barrier that enjoys excellent tunneling characteristics. The MgO tunnel barriers so formed may be used in magnetic tunnel junctions having tunneling magnetoresistance (TMR) values of greater than 100%. The highest TMR values are observed for junctions that have been annealed.

dej: ARC920030057US1.app.doc

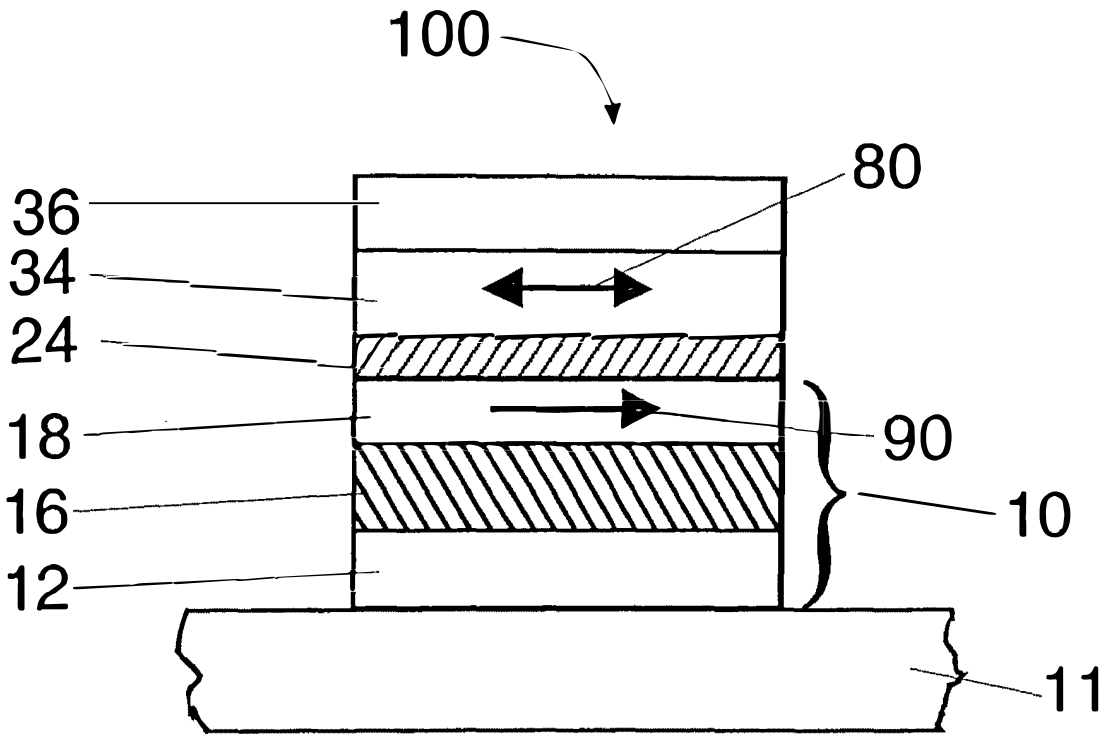

FIG. 1 (PRIOR ART)

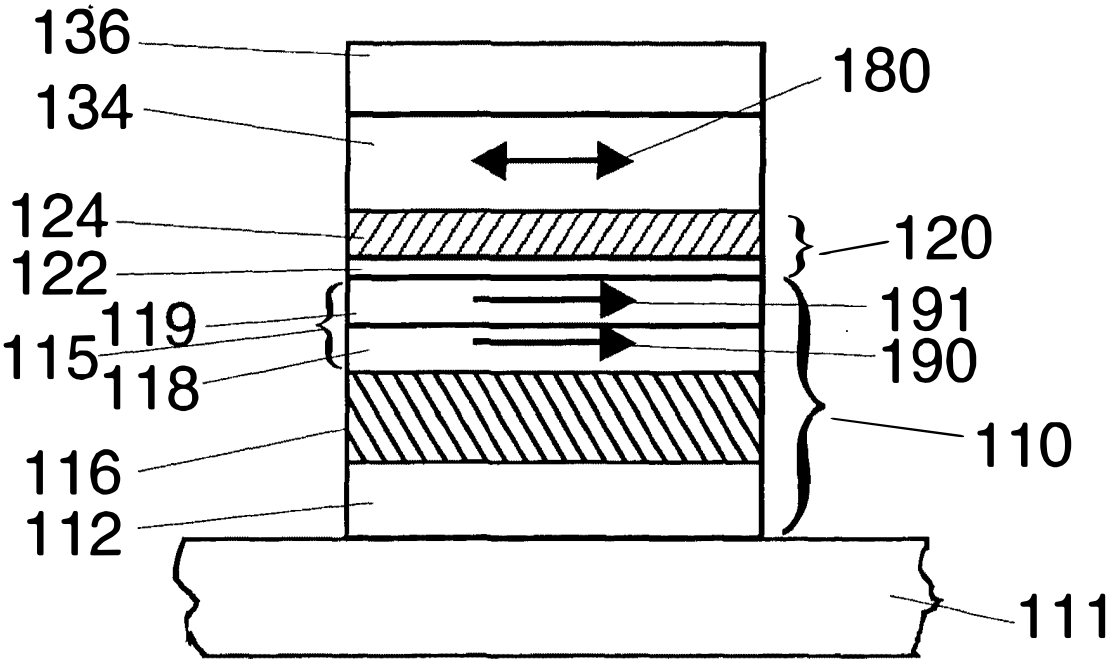

FIG. 2A

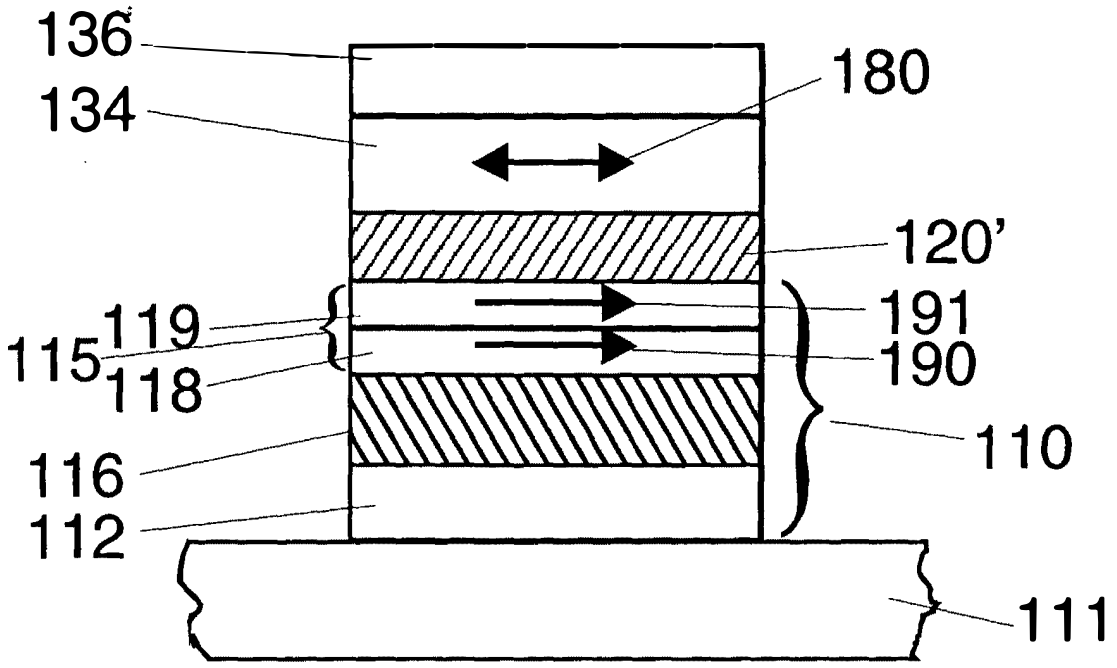

FIG. 2B

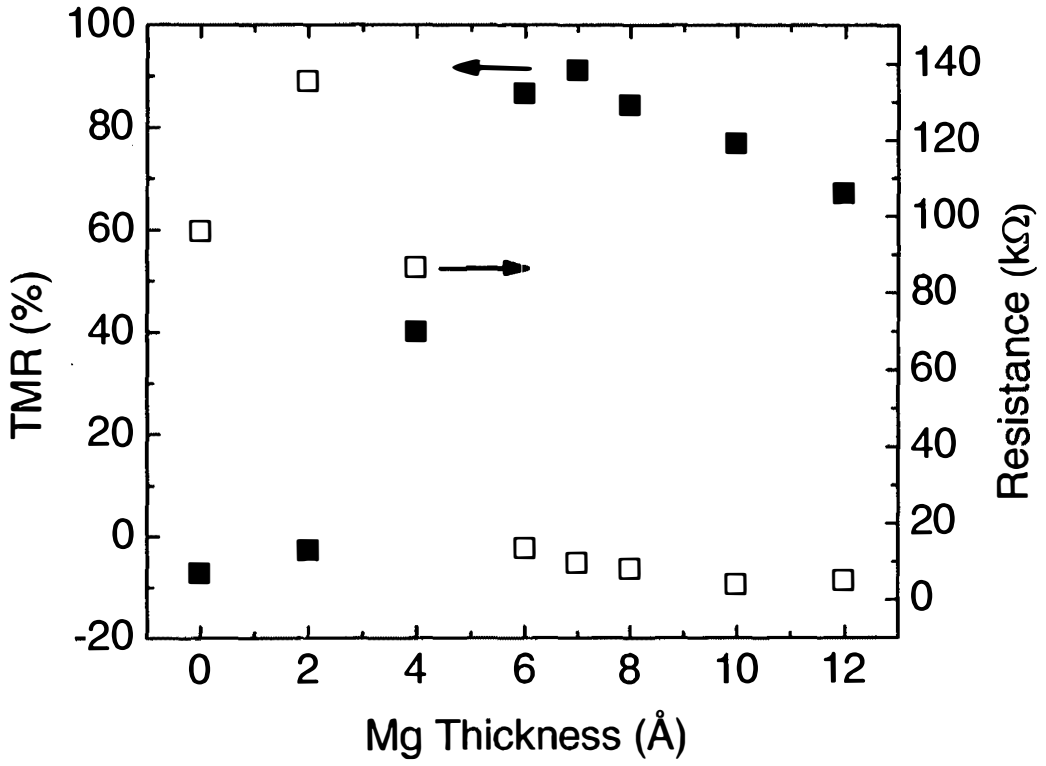
100
80
60
40
20
0
-20
TMR (%)
140
120
100
80
60
40
20
0
Resistance (kΩ)
0
2
4
6
8
10
12
Mg Thickness (Å)

FIG. 3

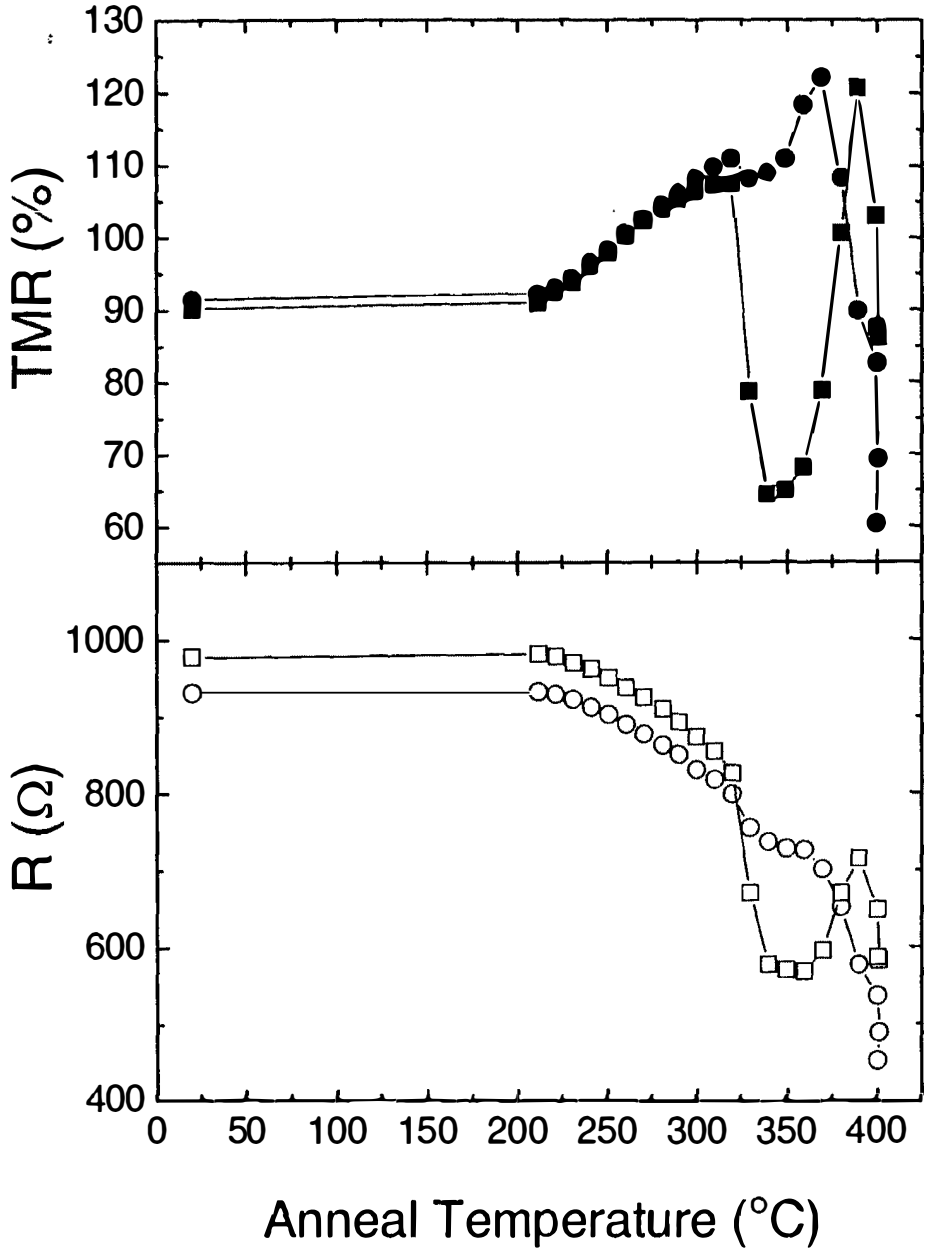
TMR (%)
130
120
110
100
90
80
70
60
R (Ω)
1000
800
600
400
0
50
100
150
200
250
300
350
400
Anneal Temperature (°C)

FIG. 4

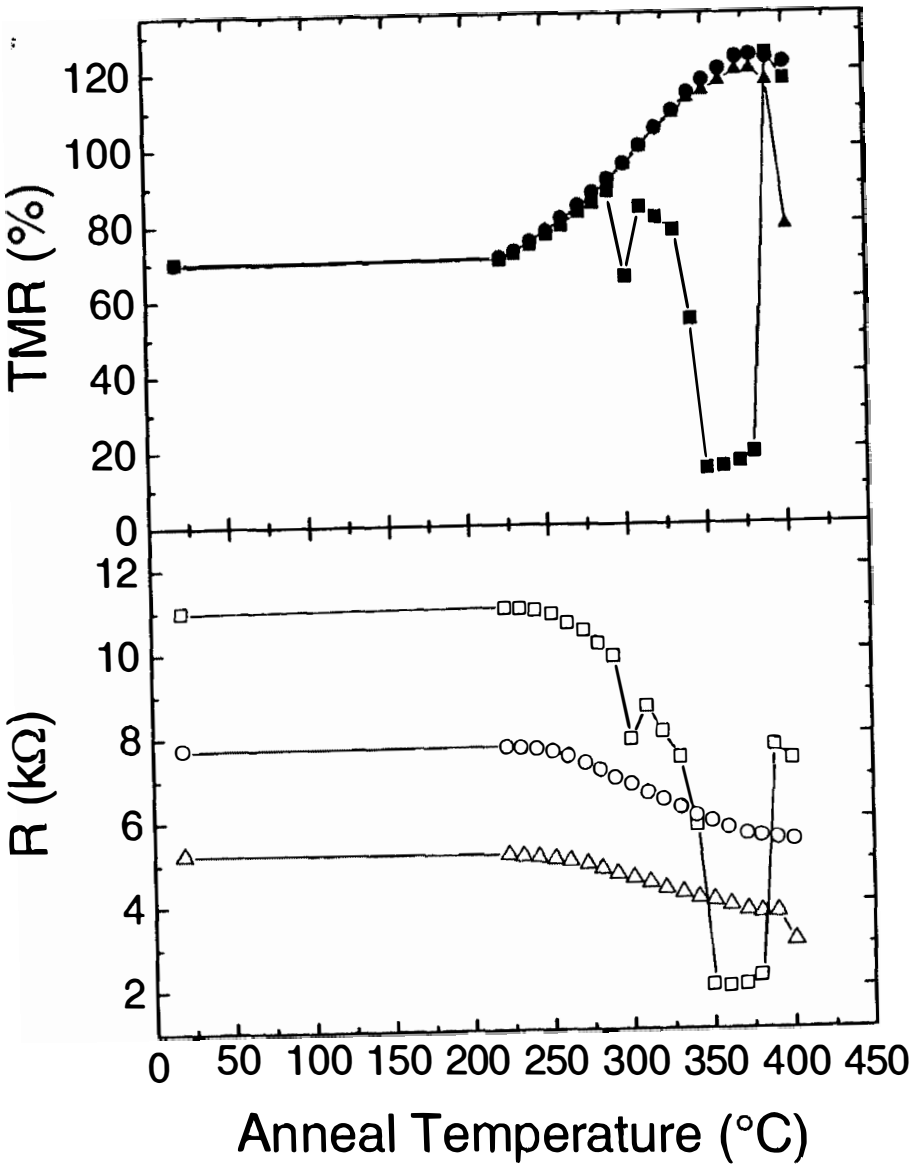
TMR (%)
120
100
80
60
40
20
0
R (kΩ)
12
10
8
6
4
2
0
50
100
150
200
250
300
350
400
450
Anneal Temperature (°C)

FIG. 5

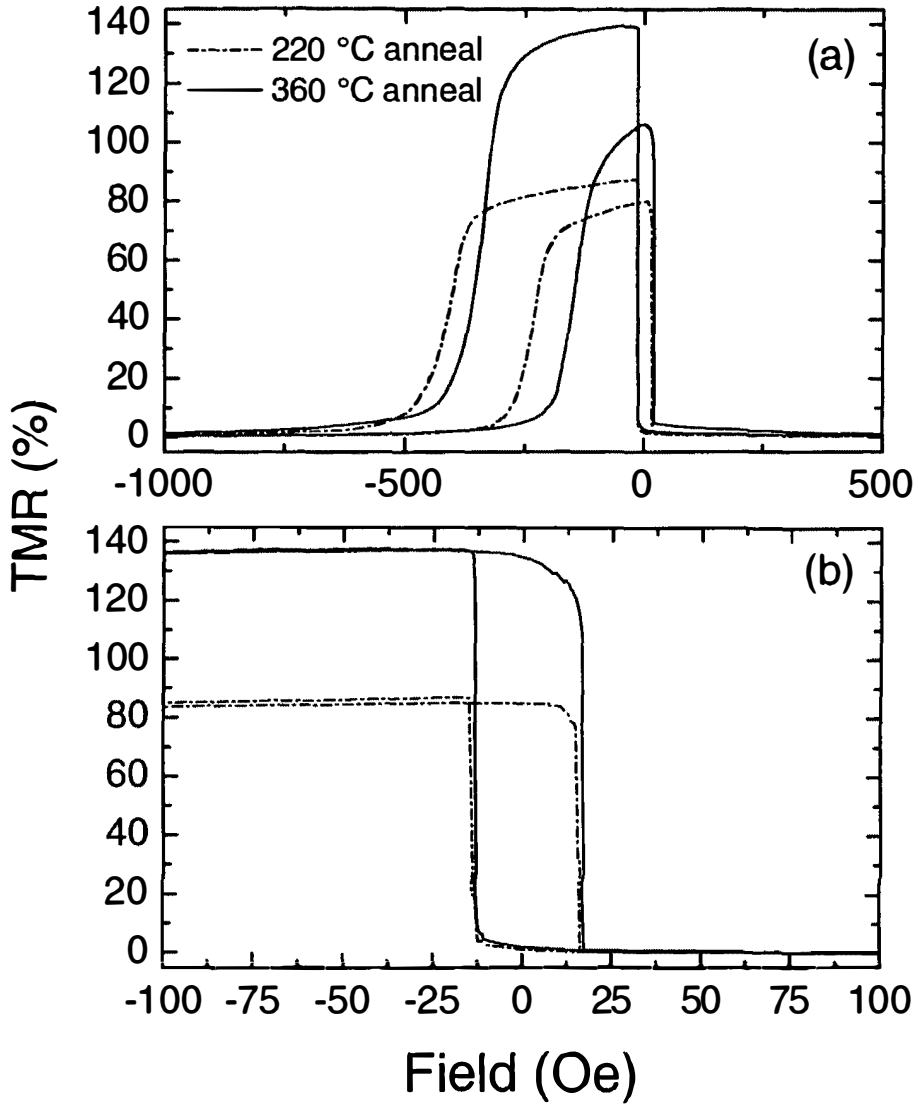
220 °C anneal
360 °C anneal
(a)
(b)
TMR (%)
Field (Oe)
140
120
100
80
60
40
20
0
-1000
-500
0
500
-100
-75
-50
-25
0
25
50
75
100

FIG. 6

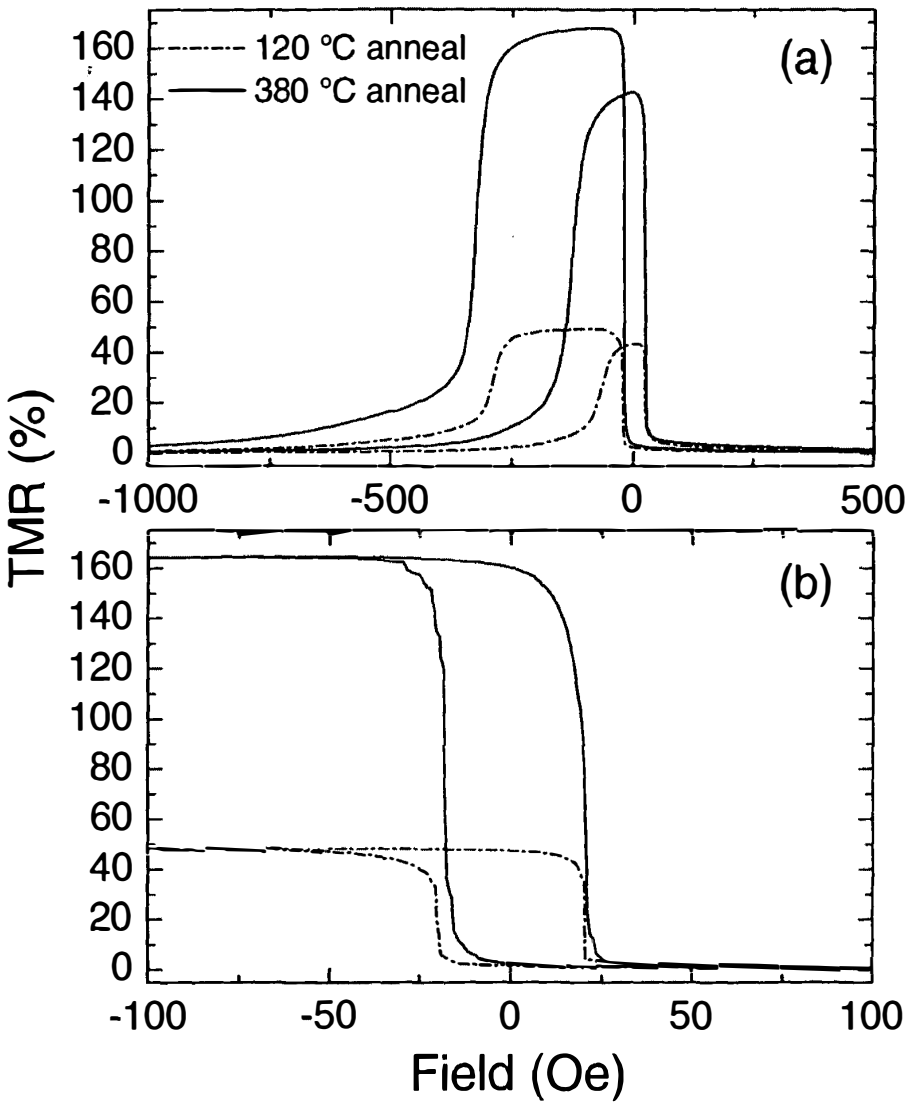
120 °C anneal
380 °C anneal
(a)
(b)
TMR (%)
Field (Oe)
160
140
120
100
80
60
40
20
0
-1000
-500
0
500
-100
-50
0
50
100

FIG. 7

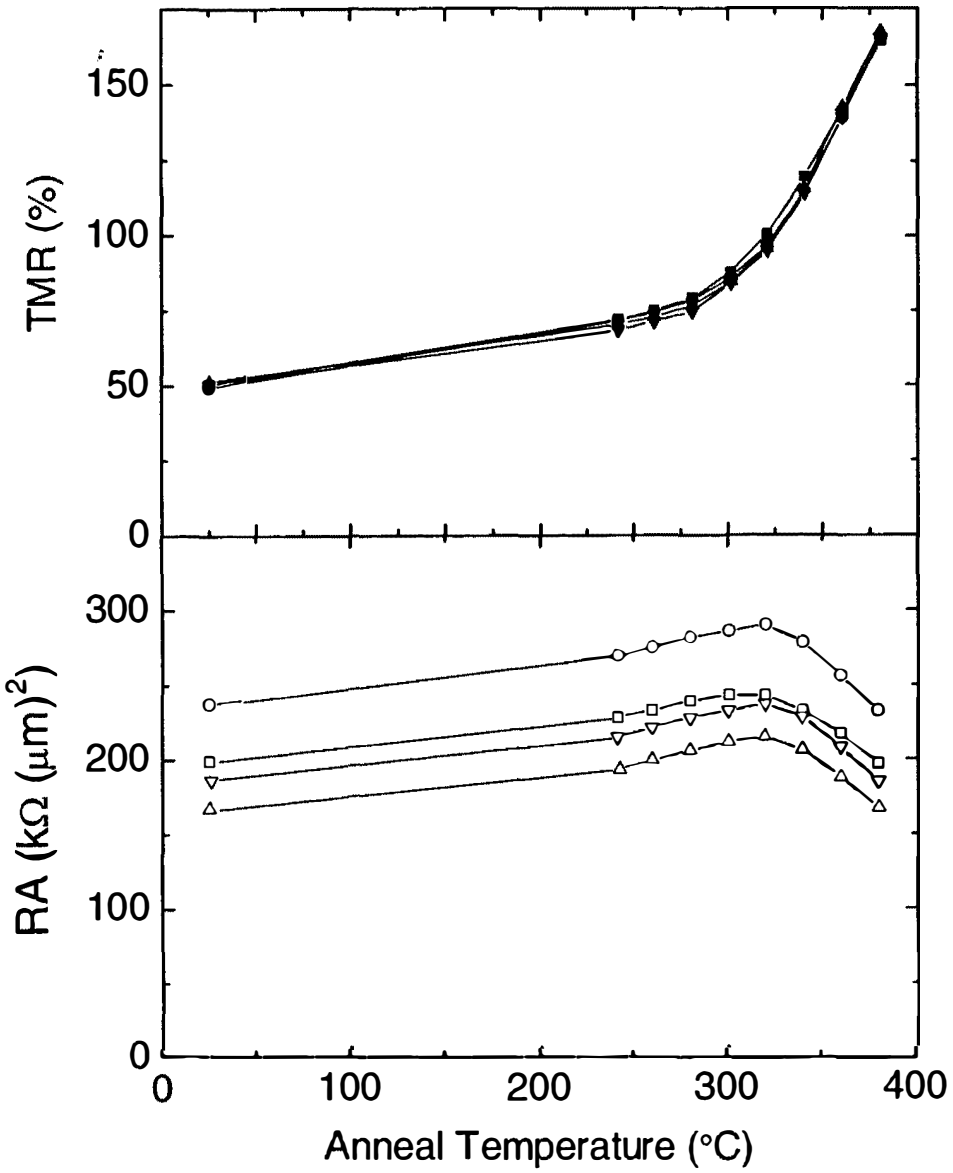
TMR (%)
150
100
50
0
RA (kΩ (μm)^2)
300
200
100
0
0
100
200
300
400
Anneal Temperature (°C)

FIG. 8

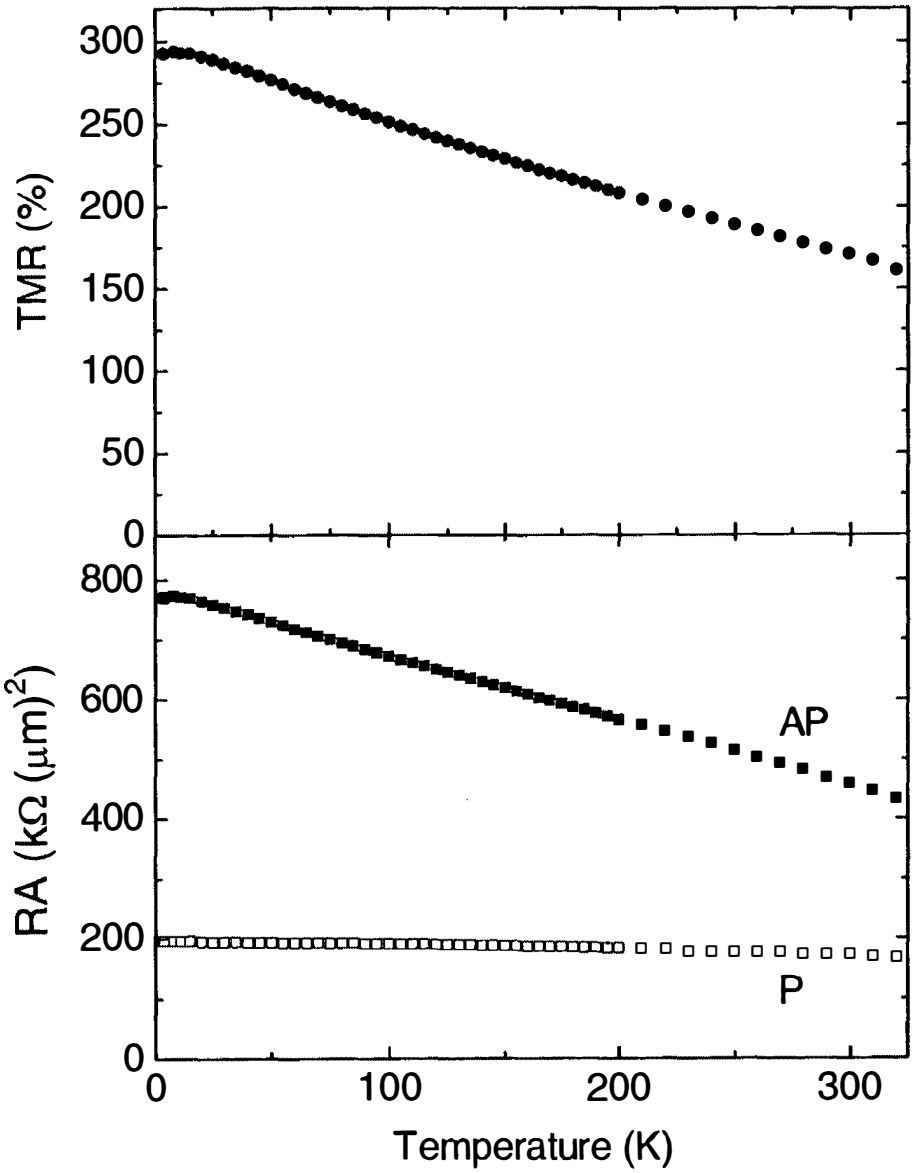
TMR (%)
300
250
200
150
100
50
0
RA (kΩ (μm)^2)
800
600
400
200
0
AP
P
0
100
200
300
Temperature (K)

FIG. 9

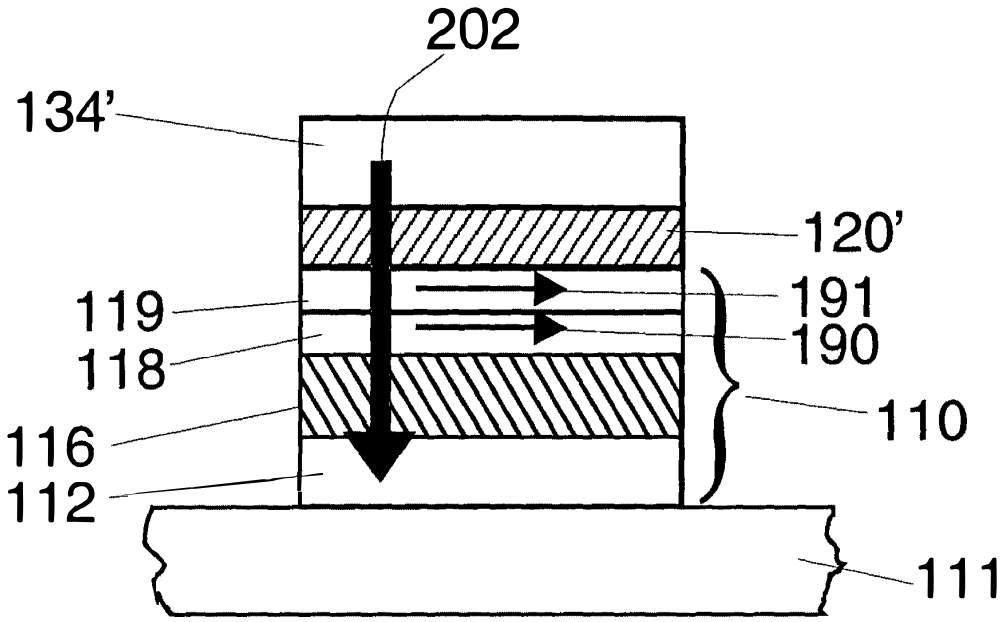

FIG. 10A

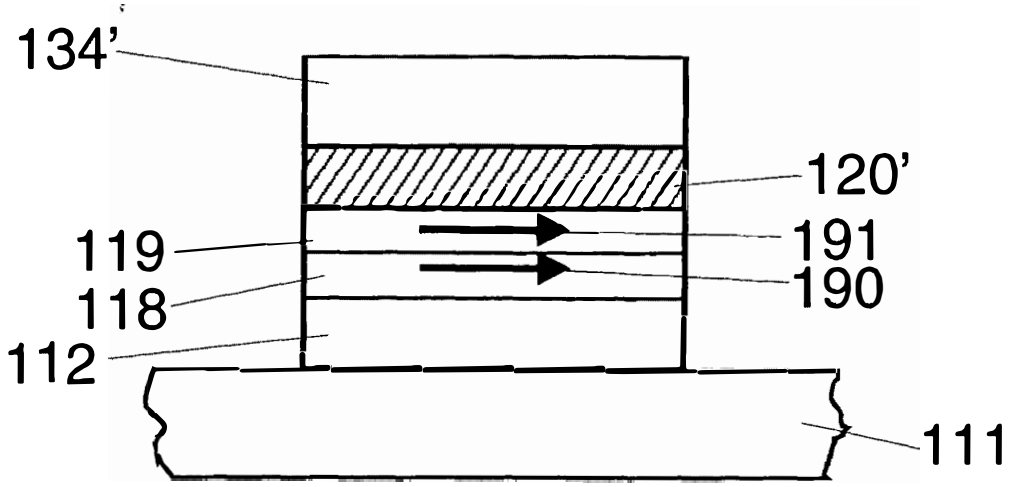

FIG. 10B

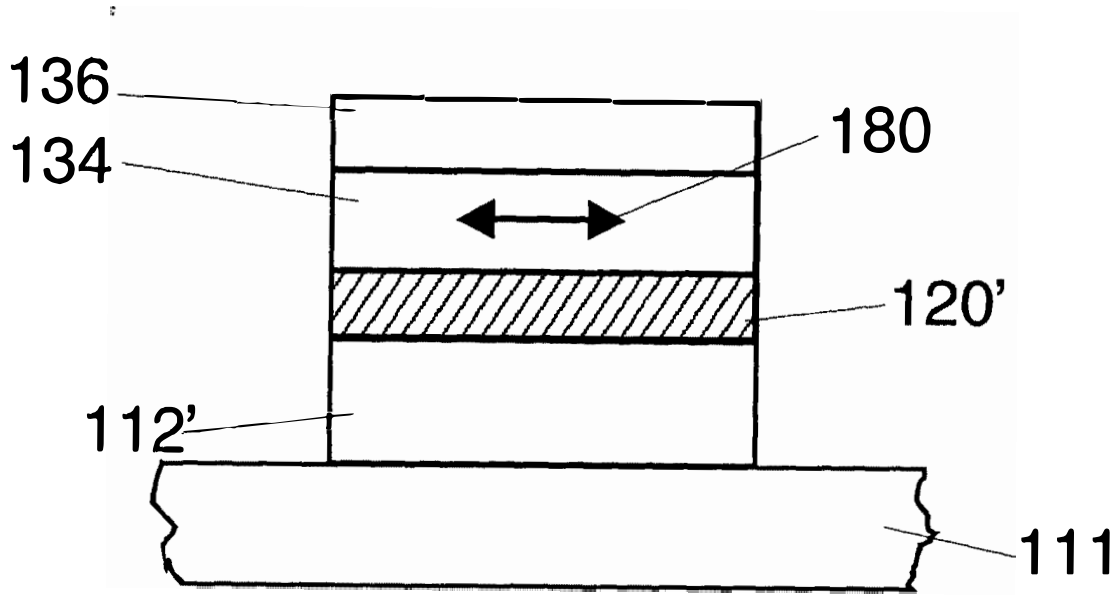

FIG. 10C

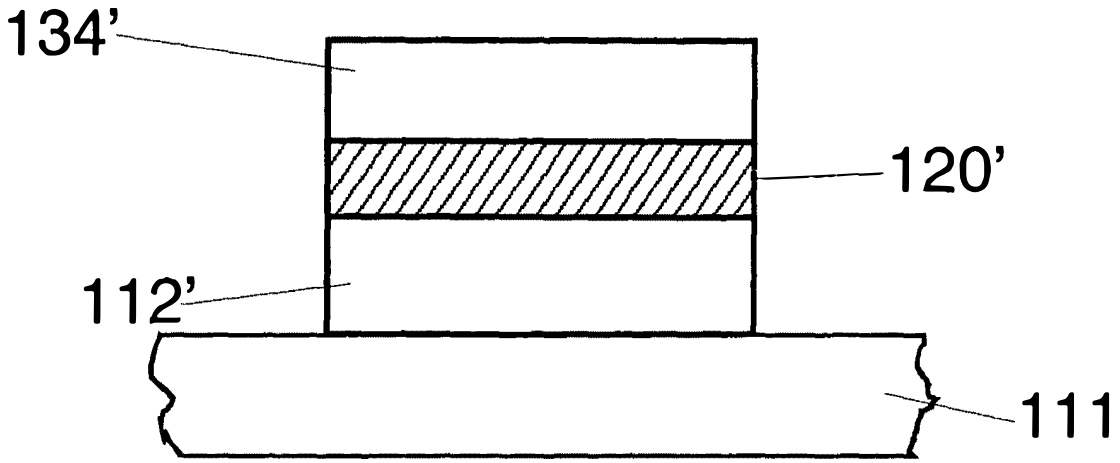

FIG. 10D

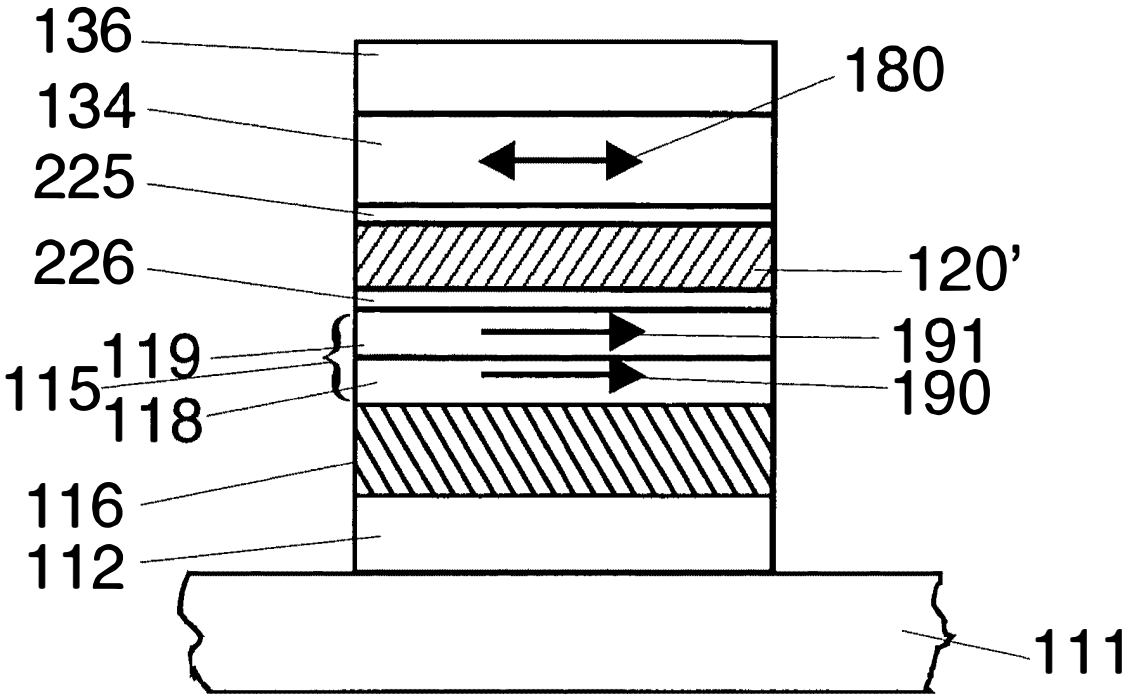

FIG. 11

DECLARATION AND POWER OF ATTORNEY FOR PATENT APPLICATION

As a below named inventor, I hereby declare that:

My residence, post office address and citizenship are as stated below next to my name.

I believe I am the original, first and sole inventor (if only one name is listed below) or an original, first and joint inventor (if plural names are listed below) of the subject matter which is claimed and for which a patent is sought on the invention entitled

MgO Tunnel Barriers and Method of Formation

the specification of which is:

X Attached hereto

I hereby state that I have reviewed and understand the contents of the above identified specification, including the claims, as amended by any amendment referred to above.

I acknowledge the duty to disclose information which is material to patentability as defined in 37 CFR §1.56.

Priority Not Claimed

I hereby claim the benefit under 35 USC §120 of any United States application(s), or §365(c) of any PCT International application designating the United States, listed below and, insofar as the subject matter of each of the claims of this application is not disclosed in the prior United States or PCT International application in the manner provided by the first paragraph of 35 USC §112, I acknowledge the duty to disclose information which is material to patentability as defined in 37 CFR §1.56 which became available between the filing date of the prior application and the national or PCT International filing date of this application.

(Application Serial No.)	(Filing Date)	(Status - patented, pending,abandoned)

Power of Attorney:

I hereby appoint the following attorney(s) and/or agent(s) to prosecute this application and to transact all business in the Patent and Trademark Office connected therewith:

Mark C. McCabe	(#53,291)
Leonard T. Guzman	(#46,308)
Daniel E. Johnson	(#37,033)
Marc D. McSwain	(#44,929)
Thirumal R. Coca	(#29,784)

Docket No. ARC920030057US1

DECLARATION AND POWER OF ATTORNEY FOR PATENT APPLICATION

Address all telephone calls to:

Daniel E. Johnson

(408) 927-3367

Address all correspondence to:

Daniel E. Johnson
IBM Corporation C4TA/J2
650 Harry Road
San Jose, California 95120

I hereby declare that all statements made herein of my own knowledge are true and that all statements made on information and belief are believed to be true; and further that these statements were made with the knowledge that willful false statements and the like so made are punishable by fine or imprisonment, or both, under Section 1001 of Title 18 of the United States Code and that such willful false statements may jeopardize the validity of the application or any patent issued thereon.

Full name of sole inventor: Stuart Stephen Papworth Parkin

Inventor's signature: Stuart Stephen Papworth Parkin Date: August 22, 2003

Residence: 6264 Royal Oak Court, San Jose, CA 95123

Citizenship: United Kingdom

Post Office Address: Same

PATENT APPLICATION SERIAL NO. _____

U.S. DEPARTMENT OF COMMERCE
PATENT AND TRADEMARK OFFICE
FEE RECORD SHEET

08/26/2003 FFANAEIA 00000011 090441 10646246

01 FC:1001 750.00 DA
02 FC:1201 252.00 DA
03 FC:1202 1098.00 DA

PTO-1556
(5/87)

*U.S. Government Printing Office: 2002 — 489-267/69033

PATENT APPLICATION FEE DETERMINATION RECORD
Effective January 1, 2003

Application or Docket Number: 9646246

CLAIMS AS FILED - PART I

	(Column 1)	(Column 2)
TOTAL CLAIMS	81	
FOR	NUMBER FILED	NUMBER EXTRA
TOTAL CHARGEABLE CLAIMS	81 minus 20=	* 61
INDEPENDENT CLAIMS	6 minus 3 =	* 3
MULTIPLE DEPENDENT CLAIM PRESENT		☐

* If the difference in column 1 is less than zero, enter "0" in column 2

SMALL ENTITY TYPE ☐		OR	OTHER THAN SMALL ENTITY	
RATE	FEE		RATE	FEE
BASIC FEE	375.00	OR	BASIC FEE	750.00
X$ 9=		OR	X$18=	1098
X42=		OR	X84=	252
+140=		OR	+280=	
TOTAL		OR	TOTAL	2100

CLAIMS AS AMENDED - PART II

AMENDMENT A

	(Column 1) CLAIMS REMAINING AFTER AMENDMENT		(Column 2) HIGHEST NUMBER PREVIOUSLY PAID FOR	(Column 3) PRESENT EXTRA
Total	*	Minus	**	=
Independent	*	Minus	***	=
FIRST PRESENTATION OF MULTIPLE DEPENDENT CLAIM				☐

SMALL ENTITY		OR	OTHER THAN SMALL ENTITY	
RATE	ADDI-TIONAL FEE		RATE	ADDI-TIONAL FEE
X$ 9=		OR	X$18=	
X42=		OR	X84=	
+140=		OR	+280=	
TOTAL ADDIT. FEE		OR	TOTAL ADDIT. FEE	

AMENDMENT B

	(Column 1) CLAIMS REMAINING AFTER AMENDMENT		(Column 2) HIGHEST NUMBER PREVIOUSLY PAID FOR	(Column 3) PRESENT EXTRA
Total	*	Minus	**	=
Independent	*	Minus	***	=
FIRST PRESENTATION OF MULTIPLE DEPENDENT CLAIM				☐

RATE	ADDI-TIONAL FEE		RATE	ADDI-TIONAL FEE
X$ 9=		OR	X$18=	
X42=		OR	X84=	
+140=		OR	+280=	
TOTAL ADDIT. FEE		OR	TOTAL ADDIT. FEE	

AMENDMENT C

	(Column 1) CLAIMS REMAINING AFTER AMENDMENT		(Column 2) HIGHEST NUMBER PREVIOUSLY PAID FOR	(Column 3) PRESENT EXTRA
Total	*	Minus	**	=
Independent	*	Minus	***	=
FIRST PRESENTATION OF MULTIPLE DEPENDENT CLAIM				☐

RATE	ADDI-TIONAL FEE		RATE	ADDI-TIONAL FEE
X$ 9=		OR	X$18=	
X42=		OR	X84=	
+140=		OR	+280=	
TOTAL ADDIT. FEE		OR	TOTAL ADDIT. FEE	

* If the entry in column 1 is less than the entry in column 2, write "0" in column 3.
** If the "Highest Number Previously Paid For" IN THIS SPACE is less than 20, enter "20."
***If the "Highest Number Previously Paid For" IN THIS SPACE is less than 3, enter "3."
The "Highest Number Previously Paid For" (Total or Independent) is the highest number found in the appropriate box in column 1.