Western Digital v. Godo Kaisha IP Bridge

U.S. Patent No. 8,405,134 | IPR2024-01447

U.S. Patent No. 10,680,167 | IPR2024-01493

January 23, 2026

Judges Arbes, McShane, and Hamann

Demonstrative Exhibit - Not Evidence

MgO(001)

Further, if Sunai's or Parkin's CoFeB electrodes are used as described in Claims 1[e] and 2 in this Ground, one of skill would understand that the MgO could be polycrystalline or single-crystal but would still have the same (001) orientation. EX1024 ¶129; EX1062 at 9:58-10:2 (describing use of polycrystalline or single-

***

crystal MgO), 18:49-51 ("highly textured (100) MgO tunnel barriers"); EX1005 at 4:30-32 (MgO (001), (100), (010) planes are the same).

Source: '134 Petition (Paper 1) at 33-34 (highlighted); *see also* '167 Petition (Paper 1) at 34-35, 38.
Demonstrative Exhibit - Not Evidence

MgO(001)

As explained for Bowen and Sunai, one of skill would have been motivated to replace either or both of Bowen's electrodes with CoFeB to increase TMR and lower H_f and H_c. EX1055 at 2270 ("[I]t is natural to replace both the free and pinned

***

layers to CoFeB to further increase the TMR value."); EX1056 ¶¶67-68; EX1035 at 3274; EX1024 ¶146; *KSR*, 550 U.S. at 416 ("combination of familiar elements" is obvious). Parkin itself teaches that the top and bottom electrodes in Figure 3A may be "inverted." EX1062 at 17:7-10.

Source: '134 Petition (Paper 1) at 39-40 (highlighted); *see also id.* at 24; '167 Petition (Paper 1) at 27.
Demonstrative Exhibit - Not Evidence

MgO(001)

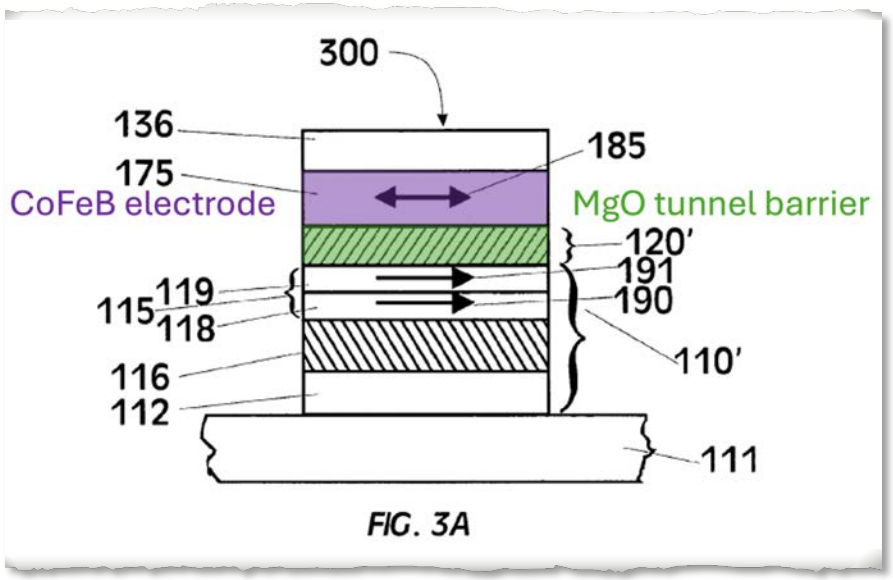

EX1062 (Parkin) at Fig. 3A (annotated)

In FIG. **3**A the direction of the magnetization of the storage layer **175**, located above the tunnel barrier **120'**, is maintained either parallel or antiparallel to that of the layer **115** (on the other side of the tunnel barrier) during the operation of the device. The MTJ device of FIG. **3**A may also be inverted, such that the reference ferromagnetic electrode is formed above the tunnel barrier and the storage layer is formed beneath the tunnel barrier.

***

Next, the MTJ device shown in FIG. **3**A is completed by forming the top ferromagnetic electrode which is the storage layer. The storage layer is comprised of an amorphous ferromagnetic layer **175**. For example, the layer **175** may be comprised of 75 Å thick $(Co_{73}Fe_{27})_{74}B_{26}$. This layer is

EX1062 (Parkin) at 17:3-10, 17:40-44 (highlighted)

Source: ’134 Petition (Paper 1) at 24; ’167 Petition (Paper 1) at 26-27.
Demonstrative Exhibit - Not Evidence

MgO(001)

94. Parkin discloses that "[c]ross-section transmission electron microscopy reveals that a portion of the storage layer 175 adjacent to the MgO tunnel barrier 120' has crystallized and is, moreover, textured in the same orientation as the crystalline MgO tunnel barrier," but "the bulk of the storage layer 175 remains amorphous, providing considerable improvement in the magnetic switching properties of arrays of MTJ devices." *Id.*, 18:51-62.

EX2053 (Ross First '134 Decl.) ¶ 94 (highlighted)
EX2053 (Ross First '167 Decl.) ¶ 93

17 Q. Okay. Okay. So if we go back up in
18 Column 17, line 7, it says: (Reading)
19 The MTJ device of Figure 3A
20 may also be inverted, such that the
21 reference ferromagnetic electrode is
22 formed above the tunnel barrier and
***
1 the storage layer is formed beneath
2 the tunnel barrier.
3 Did I read that correctly?
4 A. That's what it says.
5 Q. So Parkin is saying that you can put
6 the amorphous cobalt iron boron layer underneath
7 the MgO layer, correct?
8 A. He's saying -- he says the storage
9 layer is formed beneath the tunnel barrier.
10 Q. Right. And the storage layer may be
11 comprised of 75 angstroms cobalt iron boron,
12 correct?
13 A. It may be. According to line 43, it
14 may be comprised of cobalt iron boron.

EX1101 (Ross First Depo) at 156:17-157:14 (highlighted)

Source: '134 Reply (Paper 25) at 5-6, 19-20; '167 Reply (Paper 24) at 6, 21.
Demonstrative Exhibit - Not Evidence

MgO(001)

It appears that Parkin broadly states that its layers may be inverted, which would result in a configuration where Parkin's crystallized CoFeB would be located on the substrate, as Petitioner asserts. *See* Ex. 1062, 17:7–10. It also appears that Parkin's Figure 11, which Patent Owner argues does not teach the claim limitations, represents an embodiment only and we are

***

uncertain as to whether its related discussion serves to limit Parkin's more general statement on the inversion of layers. Patent Owner presents technical arguments as to why a person of ordinary skill in the art would not position the layers of Parkin as Petitioner proposes, but presents only attorney arguments at this time. *See* Prelim. Resp. 48. We invite the parties to present additional briefing on these issues.

Source: '134 Institution Decision (Paper 10) at 28-29 (highlighted).
Demonstrative Exhibit - Not Evidence

MgO(001)

Parkin provides no support for Petitioner's assertion that a POSA "would understand that the MgO … would still have the same (001) orientation" (Petition,

***

33-34) despite being formed on a CoFeB layer because that is not what Parkin did. Ross, ¶¶108. Indeed, Parkin teaches away from Petitioner's combinations and the claimed invention because Parkin is explicit that it was important to deposit MgO on a crystalline (100) electrode to achieve an MgO(100) layer and Petitioner cites no prior art reference disclosing a crystalline CoFeB layer of (001) or equivalent orientation. *Id*.

Source: '134 POR (Paper 19) at 24-25 (highlighted); *see also* '167 POR (Paper 18) at 14-15, 54-55.
Demonstrative Exhibit - Not Evidence

MgO(001)

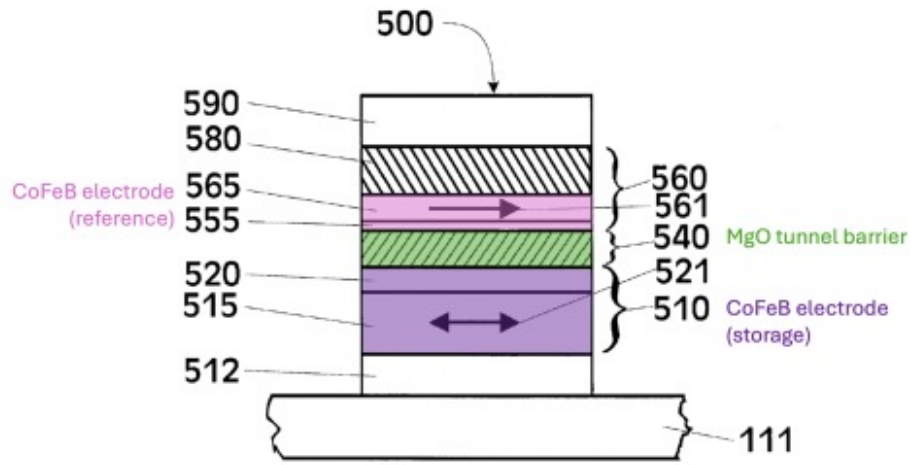

FIG. 11

EX1062 (Parkin) at Fig. 11 (annotated)

Indeed, Parkin's Figure 11 confirms Figure 3A's "inverted" embodiment expressly discloses an MgO(100) layer over an amorphous CoFeB layer. Figure 11 shows the storage and reference electrodes in Figures 3A-3B's devices "inverted." EX1062, 22:29-33. "**[S]torage magnetic electrode 510** is formed on the underlayer 512 by deposition of a layer 515 comprising an amorphous ferromagnetic alloy" of "CoFeB." EX1062, 22:56-58, 22:62-63. The CoFe "interface layer 520" is optional. EX1062, 22:66-67. An "**MgO tunnel barrier 540**" is formed atop **storage layer 510**, EX1062, 23:6, and a "**reference magnetic electrode 560**" is placed atop the **MgO**. EX1062, 23:15.

'134 Reply (Paper 25) at 4 (highlighted)

Source: '134 Reply (Paper 25) at 4; '167 Reply (Paper 24) at 7.
Demonstrative Exhibit - Not Evidence

MgO(001)

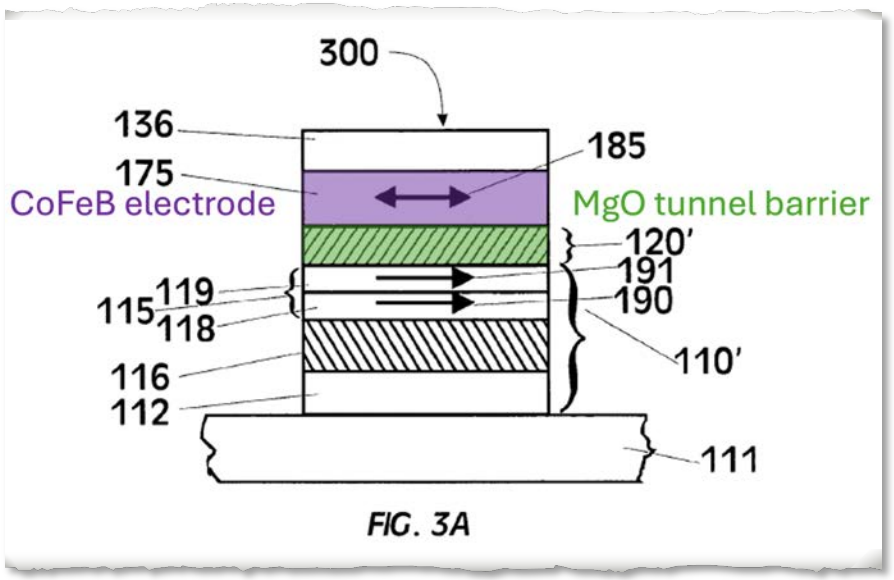

EX1062 (Parkin) at Fig. 3A (annotated)

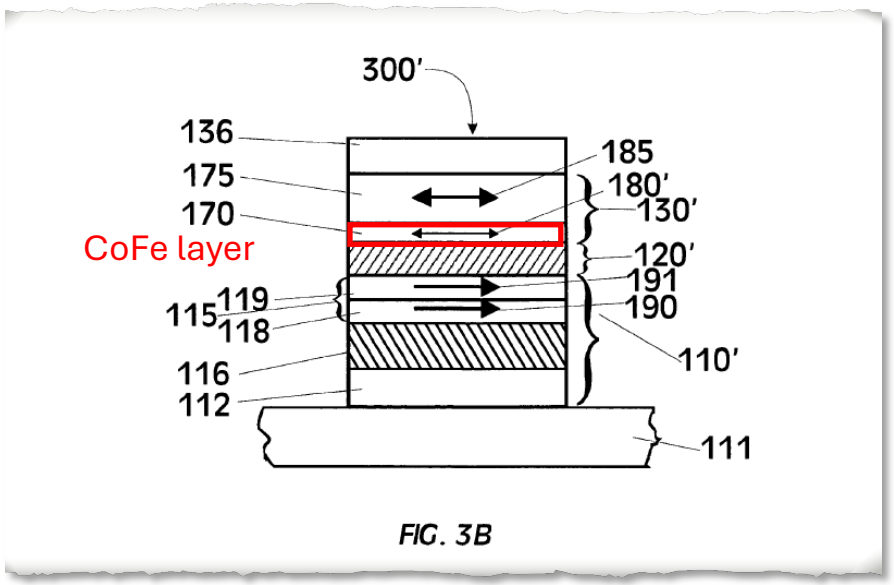

EX1062 (Parkin) at Fig. 3B (annotated)

Source: ’134 Reply (Paper 25) at 2; ’167 Reply (Paper 24) at 6; ’134 Opp. to MTS (Paper 35) at 5-6; ’167 Opp. to MTS (Paper 34) at 5-6.
Demonstrative Exhibit - Not Evidence

MgO(001)

Both experts refute Petitioner's (mis)reading of Parkin's "inverted" Fig. 3A. EX2085, 43:24-44:10 (***Bokor*** admitted: "in that sentence [Parkin] is not describing the composition of the layers"), 42:8-43:9, 44:15-45:24; EX1101, 159:4-9 (Parkin "merely says the device may be inverted. It doesn't give any further details"), 160:18-161:5 ("we don't know which of the layers are actually flipped"). ***Bokor*** conceded he found no disclosure in Parkin of forming MgO(001) on amorphous CoFeB other than a ***different*** disclosure discussed *infra* §V.B.3 about Fig. 11's interface layer 520 allegedly being "optional." EX2085, 117:15-120:4.[4]

Source: '134 Sur-reply (Paper 32) at 13; *see also* '167 Sur-reply (Paper 31) at 15-16.
Demonstrative Exhibit - Not Evidence

MgO(001)

[compared to CoFeB-based junctions].”). Further, Parkin taught that the ferromagnetic electrodes shown in Figure 3A may be “inverted” so that “the storage layer is formed beneath the tunnel barrier.” EX1062 (Parkin) at col. 17:7-10. Thus, one of skill would have understood that Parkin’s CoFeB layer 175 may be used as an upper or lower electrode, or both.

EX1024 (Bokor First ’134 Decl.) ¶ 146 (cropped, annotated);
EX1024 (Bokor First ’167 Decl.) ¶ 132

Source: ’134 Petition (Paper 1) at 40; ’167 Petition (Paper 1) at 27.
Demonstrative Exhibit - Not Evidence

MgO(001)

First, Parkin's disclosure that "[a]n interface layer 520 ***of*** a crystalline ***CoFe alloy*** may be used" (Parkin, 22:66-67) does not say **interface layer 520** is "optional." It says **interface layer 520** "may be" CoFe. Stating **interface layer 520** "may be" ***CoFe*** comports with Parkin's disclosure that another crystalline(001) layer "may be formed from $\boldsymbol{Co_{70}Fe_{30}}$" (*id.*, 13:10-13). Parkin's teaching that the crystalline(001) layer can be "formed from" different crystalline(001) materials never says **interface layer 520** is optional. EX2085, 52:3-20 (Bokor conceded POSAs could read Parkin as saying "an interface layer of something else may also be used"); 53:3-14 (similar).

Source: '134 Sur-reply (Paper 32) at 15; *see also* '167 Sur-reply (Paper 31) at 17.
Demonstrative Exhibit - Not Evidence

MgO(001)

Second, Petitioner's (mis)reading is inconsistent with Parkin's teaching that Fig. 11's MgO(001) is formed using the methods in EX2080-EX2081 (Parkin, 23:6-11) which ***Parkin itself*** says form MgO on a crystalline(001) layer (Parkin, 3:24-41). *Supra* §V.B.1 (EX2080 citations); EX2081, 91:5-21. Bokor admits Parkin says Fig. 11's MgO is made using the '835-Application's method that employs a crystalline(001) layer (EX2085, 107:8-108:4) and could not identify any disclosure in the '835-Application of forming MgO(001) on amorphous CoFeB (EX2085, 55:1-75:21, 100:21-108:4. The Reply and Bokor's declarations ignored the '835- and '246-Applications, which are dispositive of how Parkin says Fig. 11's MgO(001) layer is formed and refute Petitioner's assertion that Parkin formed MgO(001) on amorphous CoFeB.

Source: '134 Sur-reply (Paper 32) at 16; *see also* '167 Sur-reply (Paper 31) at 18.
Demonstrative Exhibit - Not Evidence

MgO(001)

III. The '134 Patent Describes How MgO(001) Is Formed on CoFeB

Petitioner's assertion that the '134 Patent "provides nothing on how to fabricate MgO(001) on an amorphous layer" (Reply, 10) is false. *See e.g.*, EX1005, 8:27-9:10 (modifying an embodiment in which MgO is not epitaxially grown to

***

use CoFeB electrodes and "an anneal process after preparation of the MTJ device" which yielded Fig. 11's MTJ with MgO(001) and crystallized CoFeB); EX2023, 2 (praising Yuasa's "novel idea[]" that formed MgO on "CoFeB amorphous" and showed that "[u]pon annealing CoFeB and MgO can be crystallized to BCC structures.").

Source: '134 Sur-reply (Paper 32) at 4-5; *see also* '167 Sur-reply (Paper 31) at 8-9.
Demonstrative Exhibit - Not Evidence

MgO(001)

Hereafter, a MTJ device according to a variation of the embodiments of the invention will be described with reference to the drawings. FIG. **11** shows the structure of the MTJ device according to the variation, which corresponds to FIG. **1**(B). As shown in FIG. **11**, the MTJ device of the variation is characterized in that, as in the MTJ device of the above-described embodiments, the electrodes disposed on either side of a single-crystal MgO_x(001) layer **503** or an oxygen-deficit poly-crystal MgO_x ($0<x<1$) in which the (001) crystal plane is preferentially oriented comprises an amorphous ferromagnetic alloy, such as CoFeB layers **501** and **505**. The amorphous ferromagnetic alloy can be formed by evaporation

***

or sputtering, for example. The resultant characteristics are substantially identical to those of the first embodiment.

’134 Patent (EX1005) at 8:56-9:2 (highlighted)
’167 Patent (EX1013) at 9:6-19

Source: ’134 Reply (Paper 25) at 9-10; ’167 Reply (Paper 24) at 11-12.
Demonstrative Exhibit - Not Evidence

MgO(001)

As the amorphous magnetic alloy, FeCoB, FeCoBSi, FeCoBP, FeZr, and CoZr may be used, for example. Although an anneal process after the preparation of the MTJ device might cause the amorphous magnetic alloy in the electrode layers to be partially or entirely crystallized, this would not lead to a significant deterioration of the MR ratio. Thus, such a crystallized amorphous magnetic alloy may be used in the electrode layers.

EX1005 ('134 Patent) at 9:3-10 (highlighted)
EX1013 ('167 Patent) at 9:20-27

Source: '134 Reply (Paper 25) at 9-10; '167 Reply (Paper 24) at 11-12.
Demonstrative Exhibit - Not Evidence

MgO(001)

Third, multiple publications acknowledge Parkin's well-known work yet attribute discovery of MgO(001) formation on amorphous CoFeB to Yuasa. *Infra* §VI. No one has ever interpreted Parkin the way Petitioner does despite Parkin's work having been cited over 4,000 times. *Id*.

Source: '134 Sur-reply (Paper 32) at 16; *see also* '167 Sur-reply (Paper 31) at 18.
Demonstrative Exhibit - Not Evidence

Reasonable Likelihood of Success

159. A POSA would not have been able to predict what crystal orientations would form (nucleate) on an amorphous surface in the thicknesses used for MTJ barriers (*i.e.*, less than 10 nm) because it was known that initial crystal formation on amorphous substrates results in randomly oriented islands of crystals which may evolve into a preferred texture as the film grows thicker. EX2065 (Petrov), S118, S126; EX2067, 621-623-25. In a study of the crystalline structure of thin films of MgO deposited on amorphous substrates, IBM found that "[f]ilms [of MgO] thinner than ~500 Å [50 nm] show a random orientation." EX2067, 625; *see also* EX2065, S117 ("[R]andomly oriented islands" of crystals are expected for "deposition on amorphous substrates.").

EX2053 (Ross First '134 Decl.) ¶ 159 (highlighted);
see also EX2053 (Ross First '167 Decl.) ¶¶ 159, 162-63

Source:'134 POR (Paper 19) at 40; '167 POR (Paper 18) at 23-24.
Demonstrative Exhibit - Not Evidence

Reasonable Likelihood of Success

in the number of molecules condensing on them. The growth may be initiated with an initial random orientation of small crystallites, as observed by Aboelfotoh.[22] As the deposition rate is relatively high for those films, insufficient surface diffusion tends to form energetically unstable (111) planes of lower atomic density. The corre-

EX1104 (Renault) at 3735

Source: ’134 Reply (Paper 25) at 9.
Demonstrative Exhibit - Not Evidence

Reasonable Likelihood of Success

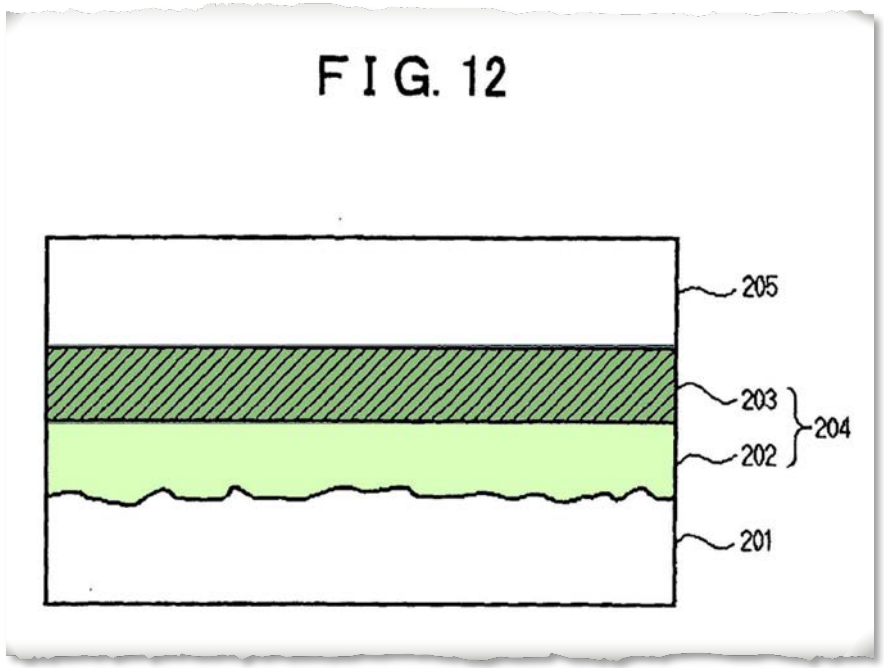

EX1027 (Nagahama) at Fig. 12 (annotated)

[0058] Only through these steps, MgO grows amorphous to be the amorphous MgO layer 202 in the early stage and, then, to be the MgO(001)-oriented highly oriented crystal layer 203. Preferably, the thickness of the amorphous MgO layer 202 is 3 to 10 nm, and the thickness of the MgO(001) crystal layer 203 is also 3 to 10 nm.

EX1027 (Nagahama) ¶ 58 (highlighted)

Source: ’134 Reply (Paper 25) at 6; ’167 Reply (Paper 24) at 8.
Demonstrative Exhibit - Not Evidence

Reasonable Likelihood of Success

distribution were the fitting parameters. Note that positions of the diffraction spots are independent of these adjustable parameters. The comparison between the observed and simulated images clearly indicates that the MgO layer grown on an amorphous CoFeB had a highly oriented polycrystalline MgO(001) structure when $t_{MgO} \geqslant 5$ ML. Therefore, the MR ratio is expected to decrease significantly when $t_{MgO} < 5$ ML (1.05 nm) because the crystalline MgO(001) barrier is essential to produce the giant TMR effect. Thus, the observed sharp drop in the MR ratio for $t_{MgO} < 1$ nm (Ref. 14) can be attributed to the formation of an amorphous MgO barrier layer rather than the deterioration of the crystalline orientation.

EX2013 (Yuasa) at 2 (highlighted)

Source: ’134 Opp to MTS (Paper 35) at 9; ’167 Opp to MTS (Paper 34) at 9.
Demonstrative Exhibit - Not Evidence

Reasonable Likelihood of Success

Nagahama formed a "MgO double underlayer" to ensure formation of a crystalline (001) ferromagnetic bottom electrode on which an MgO(001) barrier layer was formed. EX1027, ¶¶55-59, ¶67 (describing MgO double underlayer 212), ¶73, Fig. 12 (layer 204), Fig. 13 (layer 212); Ross, ¶¶188-189. The double underlayer comprised an amorphous MgO (202, 212-1) covered by a "(001)-oriented highly oriented" crystal MgO layer (203, 212-2). EX1027, ¶58, ¶61, ¶67.

'134 POR (Paper 19) at 45 (highlighted)

Nagahama invented detailed steps to form a "MgO double underlayer." E.g., EX1027, [0055]-[0059], [0067] (describing MgO double underlayer 212), Fig. 12 (layer 204 comprising amorphous MgO 202 and crystalline MgO 203), Fig. 13 (layer 212). The double underlayer comprised an amorphous MgO (202, 212-1) covered by a "(001)-oriented highly oriented" crystal MgO layer (203, 212-2).

'167 POR (Paper 18) at 38 (highlighted)

188. Nagahama invented steps to form a "MgO double underlayer" to ensure formation of a crystalline (001) ferromagnetic bottom electrode on which an MgO(001) barrier layer was formed. EX1027, ¶¶0055-0059, ¶0067 (describing MgO double underlayer 212), Fig. 12 (layer 204), Fig. 13 (layer 212). The double underlayer comprised an amorphous MgO (202, 212-1) covered by a "(001)-oriented highly oriented" crystal MgO layer (203, 212-2). EX1027, ¶0058, ¶0067. This double underlayer provided a way to form MTJs with crystalline ferromagnetic layers "on an amorphous substrate." EX1027, ¶0059. Nagahama's MgO underlayer provided a template for forming crystalline (001) ferromagnetic lower electrodes. *Id.*

EX2053 (Ross First '134 Decl.) ¶ 188 (highlighted)

209. The double underlayer comprised an amorphous MgO (202, 212-1) covered by a "(001)-oriented highly oriented" crystal MgO layer (203, 212-2). EX1027, [0058], [0067].

EX2053 (Ross First '167 Decl.) ¶ 209

Source:'134 Reply (Paper 25) at 45-46; '167 Reply (Paper 24) at 8.
Demonstrative Exhibit - Not Evidence

Reasonable Likelihood of Success

Surprisingly, the MgO layer, grown on the amorphous

***

CoFeB layer, showed a good crystalline structure with a (001) fiber texture. The lattice image of MgO(001) can be clearly identified from the lower interface to the upper interface, indicating that the MgO(001) texture developed from the initial stage of growth, i.e., the nucleation stage. Note that MgO layer grown on amorphous Si_3N_4 substrates by ion beam assisted deposition is also (001) textured right at the inception of the deposition.[14]

EX2006 (Yuasa's APL-2005) at 2 (highlighted)

Figure 1 shows a typical texturing sequence observed with the *in situ* RHEED. When the proper deposition conditions are set, the RHEED pattern changes from a diffuse-scattering pattern (from the amorphous Si_3N_4 substrate) to a crystalline pattern of MgO at about 20 Å [Fig. 1(a)], which is the limiting diffraction thickness of the RHEED. The pattern suggests that the MgO molecules form well-aligned small 3D crystallites right at the inception of the deposition, i.e., right at the nucleation stage, with (100) planes aligning out-of-plane and the [110] direction facing the ion source. The pattern gradually improves [Fig. 1(b)], and is optimized at about 100 Å [Fig. 1(c)]. At the optimal texture, the ion beam

EX1097 (Wang 1997) at 2955 (highlighted)

Source: '134 Reply (Paper 25) at 7; '167 Reply (Paper 24) at 9.
Demonstrative Exhibit - Not Evidence

Reasonable Likelihood of Success

The normalized MR ratio is plotted in Fig. 3a as a function of the bias voltage (V). The asymmetrical bias-dependence evident there could be caused by asymmetric structural defects such as the dislocations at the interfaces and the lattice distortions (see Fig. 1b). The output voltage for device applications, V_{out} ($\equiv V\times(R_{ap}-R_p)/R_{ap}$), is plotted against bias voltage in Fig. 3b. It should be noted that the V_{out} at positive bias voltages can exceed 500 mV, which is nearly three times that of conventional MTJs with an Al–O barrier[20]. This high output voltage can solve problems with read-out in gigabit-scale ultrahigh-density MRAMs. Fe/MgO/Fe MTJs need not, in principle, be single-crystal devices. Even textured Fe/MgO/Fe MTJs with (001) orientation, which can be prepared on any kinds of substrates by using a highly oriented MgO(001) seed layer[21], should exhibit a similar huge TMR effect. This means that the coherent TMR effect in Fe/MgO/Fe MTJs will be a key technology in next-generation gigabit-scale MRAMs as well as in novel spintronic devices.

EX2008 (Yuasa's 2004 NM) at 870 (highlighted)

B. Sample Preparation

We prepared $Co_{73}Cr_{15}Pt_{12}$(25 nm)/Cr–Ti(50 nm) bi-layer thin film specimens on MgO seedlayers ($t = 0 \sim 20$ nm) deposited on glass substrates. The deposition of MgO layer

EX1098 (Inaba) at 2372 (highlighted)

200-MgO peak is also observed from the seedlayer. These results mean that the 10 nm-thick MgO seedlayer deposited by ECR sputtering shows well developed {100} texture, on which Cr–Ti (100) and Co–Cr–Pt (11.0) planes can grow epitaxially to lie the c-axis on the film plane. On the contrary, the sample

EX1098 (Inaba) at 2373 (highlighted)

Source: '134 Reply (Paper 25) at 8; '167 Reply (Paper 24) at 9-10.
Demonstrative Exhibit - Not Evidence

Reasonable Likelihood of Success

target.[8] Apart from epitaxy, MgO grows with strong preferential ⟨100⟩ orientation regardless of the substrate selection. The authors report that the substrate

EX1036 (Wulff) at 148 (highlighted)

Apart from the epitaxy, MgO is known to grow with strong preferential (100) orientation regardless of the substrate selection. If this characteristic feature maintains at one monolayer of MgO deposition, it will serve as a good candidate to be the substrate for the overgrowth of the epitaxial NbN.

EX1099 (Tonouchi) at 962 (highlighted)

An amazing result of this technique is that the NbN epitaxy is achieved on 5-Å MgO/Si even though the MgO/Si structure has a large lattice mismatch (8.8%). Since the mechanism of the (100)-oriented NbN growth originates in the epitaxial growth on the (100)-oriented MgO, it appears that even 5-Å-thick MgO became fully oriented in the (100) direction. To study the mechanism of the MgO growth with the (100) orientation, we carried out the NbN growth on the MgO thermally oxidized Si substrate, where the Si substrate was oxidized in O_2 atmosphere at 1000 °C for 1 h. The NbN epitaxial layer was then obtained even on a 10-Å MgO/SiO_2 structure, which suggests that the mechanism of the epitaxy cannot be explained by the epitaxial growth of MgO but rather by the natural orientation or the graphoepitaxy of MgO. The possibility of a MgO graphoepitaxy might be due

EX1099 (Tonouchi) at 964 (highlighted)

Source: ’134 Reply (Paper 25) at 8; ’167 Reply (Paper 24) at 10.
Demonstrative Exhibit - Not Evidence