Trials@uspto.gov
571-272-7822

Paper 54
Date: April 29, 2026

UNITED STATES PATENT AND TRADEMARK OFFICE

BEFORE THE PATENT TRIAL AND APPEAL BOARD

WESTERN DIGITAL TECHNOLOGIES, INC.,
Petitioner,

v.

GODO KAISHA IP BRIDGE 1,
Patent Owner.

IPR2024-01493
Patent 10,680,167 B2

Before JUSTIN T. ARBES, SHEILA F. McSHANE, and JOHN D. HAMANN, *Administrative Patent Judges.*

HAMANN, *Administrative Patent Judge*.

JUDGMENT
Final Written Decision
Determining Some Challenged Claims Unpatentable
35 U.S.C. § 318(a)
Denying Petitioner's Motion to Strike
Denying Patent Owner's Motion to Strike
37 C.F.R. § 42.23(b)
Denying Patent Owner's Motion to Exclude
37 C.F.R. § 42.64(c)

I. INTRODUCTION

In this *inter partes* review, Western Digital Technologies, Inc. ("Petitioner") challenges the patentability of claims 1–15 ("the challenged claims") of U.S. Patent No. 10,680,167 B2 (Ex. 1013, "the '167 patent"), owned by Godo Kaisha IP Bridge 1 ("Patent Owner"). We have jurisdiction under 35 U.S.C. § 6. This Final Written Decision is entered pursuant to 35 U.S.C. § 318(a) and 37 C.F.R. § 42.73. For the reasons below, we determine that by a preponderance of the evidence Petitioner (i) shows that challenged claims 1, 3, 5, 7–11, 14, and 15 are unpatentable and (ii) does not show that claims 2, 4, 6, 12, and 13 are unpatentable. In addition, we deny Petitioner's Motion to Strike, Patent Owner's Motion to Strike, and Patent Owner's Motion to Exclude, for the reasons below.

A. Procedural History

Petitioner filed a Petition requesting *inter partes* review of the challenged claims. Paper 1 ("Pet."). Patent Owner filed a Preliminary Response. Paper 7. We instituted *inter partes* review of the challenged claims on all grounds raised in the Petition. Paper 9 ("Dec. on Inst."), 23.

Following institution, Patent Owner filed a Response to the Petition. Paper 18 ("PO Resp."). Petitioner filed a Reply to Patent Owner's Response. Paper 24 ("Pet. Reply"). Patent Owner filed a Sur-reply to Petitioner's Reply. Paper 31 ("PO Sur-reply").

In addition, with our authorization, Patent Owner filed a Motion to Strike (Paper 30, "PO Mot. Strike"), Petitioner filed an Opposition to the motion (Paper 34, "Pet. Opp. Mot. Strike"), and Patent Owner filed a Reply (Paper 36, "PO Reply Mot. Strike") in support of the Motion.

In addition, with our authorization, Petitioner filed a Motion to Strike (Paper 35, "Pet. Mot. Strike"), Patent Owner filed an Opposition to the

motion (Paper 42, "PO Opp. Mot. Strike"), and Petitioner filed a Reply (Paper 44, "Pet. Reply Mot. Strike") in support of the motion.

In addition, Patent Owner filed a Motion to Exclude (Paper 45, "PO Mot. Excl."), Petitioner filed an Opposition to the motion (Paper 46, "Pet. Opp. Mot. Excl."), and Patent Owner filed a Reply in support of the motion (Paper 47).

An oral hearing was held on January 23, 2026. A transcript of the oral hearing is included in the record. Paper 53 ("Tr.").

B. Real Parties-in-Interest

Petitioner states that "Western Digital Technologies, Inc., and related entity Western Digital Corporation, are the real parties-in-interest." Pet. 73. Patent Owner states that it is the real party-in-interest. Paper 8, 1.

C. Related Matters

The parties identify *Godo Kaisha IP Bridge 1 v. Western Digital Technologies, Inc.,* No. 3:24-cv-06555 (N.D. Cal.) and *Godo Kaisha IP Bridge 1 v. Seagate Technology LLC*, No. 24-cv-3691 (D. Minn.), as matters that may affect, or be affected by, a decision in this proceeding. Pet. 73; Paper 8, 2.

D. The Challenged Patent

The '167 patent "relates to a magnetic tunnel junction device and . . . , particularly to a magnetic tunnel junction device with a high magnetoresistance." Ex. 1013, 1:27–30. In particular, the '167 patent explains that "a MTJ [magnetic tunnel junction] device comprises a tunnelling junction structure in which a tunnel barrier . . . made of an oxide is sandwiched between a first and a second electrode made of a ferromagnetic metal." *Id.* at 1:42–46. An object of the patent is stated as "to increase the output voltage of a MTJ device." *Id.* at 2:54–55.

According to the ’167 patent, “the MTJ device structure of [an] embodiment comprises a first Fe (001) layer 1, a second Fe (001) layer 5, and a single-crystalline MgO_x (001) layer 3 or a poly-crystalline MgO_x ($0<x<l$) layer 3 sandwiched there between, the polycrystalline layer having the (001) crystal plane preferentially oriented therein.” *Id.* at 5:38–44. This structure is shown in Figure 1(B), reproduced below.

FIG. 1 (B)

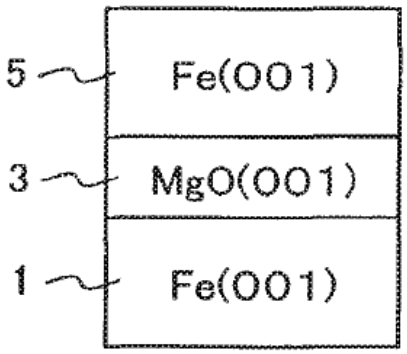

Figure 1(B) “shows the structure of a MTJ device according to” an embodiment of the ’167 patent. *Id.* at 3:65–66. In addition, the ’167 patent discloses a variation—Figure 11 reproduced below—of the structure shown in Figure 1(B). *Id.* at 4:33–34.

FIG. 11

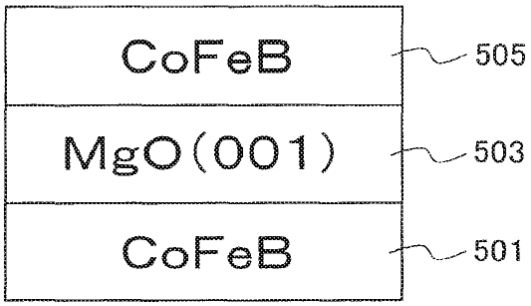

Figure 11 shows "the MTJ device of the variation is characterized in that . . . the electrodes disposed on either side of a single-crystal MgO_x(00l) layer 503 or an oxygen-deficit poly-crystal MgO_x (0<x<l) in which the (001) crystal plane is preferentially oriented comprises an amorphous ferromagnetic alloy, such as . . . layers 501 and 505," which consist of Co, Fe, and B. *Id.* at 9:10–16.

E. The Challenged Claims

Petitioner challenges claims 1–15 in this proceeding. Claims 1 and 11 are independent claims. Claim 1 is illustrative of the challenged claims and is reproduced below:

> 1. A method of manufacturing a magnetic tunnel junction (MTJ) device, comprising:
> forming a first CoFeB layer that is amorphous;
> forming a magnesium oxide (MgO) layer over the first CoFeB layer;
> forming a second CoFeB layer that is amorphous over the MgO layer; and
> annealing the first and second CoFeB layers and the MgO layer,
> wherein the first and second CoFeB layers are crystallized by the annealing, and
> wherein the MgO layer is poly-crystalline in which a (001) crystal plane is preferentially oriented.

Ex. 1013, 9:55–67.

F. Instituted Grounds of Unpatentability

We instituted trial based on the following grounds of unpatentability, which are all the grounds of unpatentability raised in the Petition:

Claim(s) Challenged	35 U.S.C. §[1]	Reference(s)/Basis
1–15	103(a)	Bowen, Parkin[2]
1–15	103(a)	Bowen,[3] Sunai[4]
7, 8, 14	103(a)	Bowen, Parkin, Soukup
7, 8, 14	103(a)	Bowen, Sunai, Soukup[5]
1–15	103(a)	Nagahama,[6] Parkin
1–15	103(a)	Nagahama, Sunai
7, 8, 14	103(a)	Nagahama, Parkin, Soukup
7, 8, 14	103(a)	Nagahama, Sunai, Soukup

Pet. 17–18, 20–68. Petitioner submits in support of its arguments the Declaration of Jeffrey Bokor, Ph.D. (Ex. 1024) and the Reply Declaration of Jeffrey Bokor, Ph.D. (Ex. 1105). Patent Owner submits in support of its arguments the Declaration of Caroline A. Ross, Ph.D. (Ex. 2053).

II. LEVEL OF ORDINARY SKILL IN THE ART

To determine whether an invention would have been obvious at the time it was made, we consider the level of ordinary skill in the pertinent art at the time of the invention. *Graham v. John Deere Co.*, 383 U.S. 1, 17 (1966). In assessing the level of ordinary skill in the art, various factors

---

[1] The Leahy-Smith America Invents Act ("AIA") included revisions to 35 U.S.C. § 103 that became effective on March 16, 2013. Because the '167 patent issued from an application having an effective filing date before March 16, 2013, we apply the pre-AIA version of the statutory basis for unpatentability.

[2] US 7,270,896 B2, issued Sept. 18, 2007 (Ex. 1062, "Parkin").

[3] M. Bowen et al., *Large magnetoresistance in Fe/MgO/FeCo(001) epitaxial tunnel junctions on GaAs(001)*, Appl. Phys. Lett., vol. 79, no. 11, 1655–57 (Sept. 10, 2001) (Ex. 1026, "Bowen").

[4] JP 2002/204004 A, published July 19, 2002 (Ex. 1030, "Sunai") (as translated).

[5] R. J. Soukup, *Voltage-current characteristics for electrical conduction through thin MgO films*, J. Appl. Phys., Vol. 41, No. 8, 3229–3236 (1970) (Ex. 1028, "Soukup").

[6] EP 1 391 942 A1, published Feb. 25, 2004 (Ex. 1027, "Nagahama").

may be considered, including the "type of problems encountered in the art; prior art solutions to those problems; rapidity with which innovations are made; sophistication of the technology; and educational level of active workers in the field." *In re GPAC, Inc.*, 57 F.3d 1573, 1579 (Fed. Cir. 1995) (citing *Custom Accessories, Inc. v. Jeffrey-Allan Indus., Inc.*, 807 F.2d 955, 962–63 (Fed. Cir. 1986)). "[O]ne or more factors may predominate." *Id.*

In our Decision on Institution, we adopted the definition Petitioner proposes for one having ordinary skill in the art at the time of the invention of the '167 patent. Dec. on Inst. 6. Namely, we found that one of ordinary skill in the art would have had "a Ph.D. in electrical engineering, physics, materials science, or a related field, and at least one year of experience in the research, design, and/or development of magnetic/spintronic devices, or the equivalent," or "a Master's degree in electrical engineering, physics, materials science, or a related field, and four years of experience in the research, design, and/or development of magnetic/spintronic devices, or the equivalent." *Id.* (citing Pet. 20 (citing Ex. 1024 ¶ 25)). We also found that "[l]ess work experience may be compensated by a higher level of relevant education, and vice versa." *Id.* Patent Owner does not address Petitioner's definition, nor provide its own. *See generally* PO Resp.

Because Petitioner's definition of the level of skill in the art is consistent with the '167 patent and the asserted prior art, we maintain it for purposes of this Final Written Decision. *See Okajima v. Bourdeau*, 261 F.3d 1350, 1355 (Fed. Cir. 2001); *In re GPAC*, 57 F.3d at 1579; *In re Oelrich*, 579 F.2d 86, 91 (CCPA 1978).

III. CLAIM CONSTRUCTION

In this *inter partes* review, claims are construed using the same claim construction standard that would be used to construe the claims in a civil

action under 35 U.S.C. § 282(b), following the standard articulated in *Phillips v. AWH Corp.*, 415 F.3d 1303 (Fed. Cir. 2005) (en banc). 37 C.F.R. § 42.100(b). In applying such standard, claim terms generally are given their ordinary and customary meaning, as would be understood by a person of ordinary skill in the art, at the time of the invention and in the context of the entire patent disclosure. *Phillips*, 415 F.3d at 1312–13. "In determining the meaning of the disputed claim limitation, we look principally to the intrinsic evidence of record, examining the claim language itself, the written description, and the prosecution history, if in evidence." *DePuy Spine, Inc. v. Medtronic Sofamor Danek, Inc.*, 469 F.3d 1005, 1014 (Fed. Cir. 2006) (citing *Phillips*, 415 F.3d at 1312–17).

Here, neither party sets forth any term for claim construction. Pet. 17; *see generally* PO Resp. Thus, for purposes of this Decision, we afford the claim terms their plain and ordinary meaning. *See, e.g.*, *Nidec Motor Corp. v. Zhongshan Broad Ocean Motor Co.*, 868 F.3d 1013, 1017 (Fed. Cir. 2017) (quoting *Vivid Techs., Inc. v. Am. Sci. & Eng'g, Inc.*, 200 F.3d 795, 803 (Fed. Cir. 1999) ("[W]e need only construe terms 'that are in controversy, and only to the extent necessary to resolve the controversy.'")).

IV. PRINCIPLES OF LAW

"In an [*inter partes* review], the petitioner has the burden from the onset to show with particularity why the patent it challenges is unpatentable." *Harmonic Inc. v. Avid Tech., Inc.*, 815 F.3d 1356, 1363 (Fed. Cir. 2016) (citing 35 U.S.C. § 312(a)(3) (requiring *inter partes* review petitions to identify "with particularity . . . the evidence that supports the grounds for the challenge to each claim")). This burden of persuasion never shifts to Patent Owner except in limited circumstances not present here. *See*

Dynamic Drinkware, LLC v. National Graphics, Inc., 800 F.3d 1375, 1378 (Fed. Cir. 2015) (discussing the burden of proof in *inter partes* review).

A claim is unpatentable under 35 U.S.C. § 103(a) if the differences between the claimed subject matter and the prior art are such that the subject matter, as a whole, would have been obvious at the time of the invention to a person having ordinary skill in the art. *KSR Int'l Co. v. Teleflex, Inc.*, 550 U.S. 398, 406 (2007). The question of obviousness is resolved on the basis of underlying factual determinations, including: (1) the scope and content of the prior art; (2) any differences between the claimed subject matter and the prior art; (3) the level of ordinary skill in the art; and (4) objective evidence of non-obviousness, if present. *See Graham*, 383 U.S. at 17–18. When evaluating a claim for obviousness, we also must "determine whether there was an apparent reason to combine the known elements in the fashion claimed by the patent at issue." *KSR*, 550 U.S. at 418 (citing *In re Kahn*, 441 F.3d 977, 988 (Fed. Cir. 2006)).

V. OBJECTIVE INDICIA OF NONOBVIOUSNESS

Objective indicia of non-obviousness—also referred to as secondary considerations—"play[s] an important role as a guard against the statutorily proscribed hindsight reasoning in the obviousness analysis." *WBIP, LLC v. Kohler Co.*, 829 F.3d 1317, 1328–30 (Fed. Cir. 2016). It "may often be the most probative and cogent evidence in the record," and "must be considered in every case." *Id.* at 1328 (emphasis omitted). Objective indicia of nonobviousness may include long-felt but unsolved need, failure of others, unexpected results, commercial success, copying, licensing, industry praise, and expert skepticism. *Mintz v. Dietz & Watson, Inc.*, 679 F.3d 1372, 1379 (Fed. Cir. 2012).

"In order to accord substantial weight to secondary considerations in an obviousness analysis, 'the evidence of secondary considerations must have a "nexus" to the claims, i.e., there must be "a legally and factually sufficient connection" between the evidence and the patented invention.'" *Fox Factory, Inc. v. SRAM, LLC*, 944 F.3d 1366, 1373 (Fed. Cir. 2019) (citing *Henny Penny Corp. v. Frymaster LLC*, 938 F.3d 1324, 1332 (Fed. Cir. 2019)). "The patentee bears the burden of showing that a nexus exists." *WMS Gaming Inc. v. Int'l Game Tech.*, 184 F.3d 1339, 1359 (Fed. Cir. 1999). A nexus is presumed when "the patentee shows that the asserted objective evidence is tied to a specific product and that product 'embodies the claimed features, and is coextensive with them.'" *Fox Factory*, 944 F.3d at 1373 (quoting *Polaris Indus., Inc. v. Arctic Cat, Inc.*, 882 F.3d 1056, 1072 (Fed. Cir. 2018)). "A finding that a presumption of nexus is inappropriate does not end the inquiry into secondary considerations," as "the patent owner is still afforded an opportunity to prove nexus by showing that the evidence of secondary considerations is the 'direct result of the unique characteristics of the claimed invention.'" *Id.* at 1373–74 (citing *In re Huang*, 100 F.3d 135, 140 (Fed. Cir. 1996)).

Here, Patent Owner contends that the claimed invention was disclosed in a research article published in Applied Physics Letters ("APL") and co-authored by Dr. Yuasa. PO Resp. 59 (citing Ex. 2006[7] ("the APL paper")). And Patent Owner argues that the APL paper discloses the elements of independent claims 1 and 11, as well as a limitation recited in dependent claims 2, 4, 6, 12, and 13. *Id.* at 59–60.

---

[7] D. Djayaprawira, et al., *230% room-temperature magnetoresistance in CoFeB/MgO/CoFeB magnetic tunnel junctions*, Applied Physics Letters, vol. 86, no. 9 (2005), 092502-1 to -3.

Patent Owner asserts that the claimed technology has received industry-wide praise. *Id.* at 57–65. Patent Owner argues that the APL paper has been cited more than 1,200 times. *Id.* at 60 (citing Ex. 2052[8]). Patent Owner refers to a 2005 article reviewing the APL paper that praised its "***unprecedentedly large***" tunnel magnetoresistance ratio ("TMR") ratios. *Id.* (quoting Ex. 2019,[9] 591–92). Patent Owner asserts that there is a direct nexus between this praise and the claimed invention. *Id.* (citing Ex. 2053 ¶ 299). Patent Owner also points to a Dr. Yuasa-authored chapter in a textbook for support that the invention disclosed in the APL paper allegedly "unleashed a new era of skyrocketing TMRs." *Id.* at 61 (citing Ex. 1057,[10] 46; Ex. 2053 ¶ 304). Patent Owner contends that the chapter credited the method of the APL paper as using a deposition technique "to make a 'CoFeB/MgO/CoFeB' 'MTJ structure,' where the 'as-grown state' of the CoFeB was 'amorphous.'" *Id.* (citing Ex. 1057, 47). Patent Owner asserts that the chapter "explains that '[s]urprisingly' the MgO barrier became 'a (001)-oriented polycrystal' despite being grown on an 'amorphous CoFeB' underlayer." *Id.* (citing Ex. 1057, 47; Ex. 2053 ¶¶ 300–303). Patent Owner also asserts industry praise for the APL paper from Petitioner (Western Digital Corporation, an identified real party in interest in this proceeding), as well as others. *See id.* at 58–59 (citing Ex. 2020,[11] 8; Ex. 1026, 1655;

---

[8] Google Scholar data page for Ex. 2006 (captured June 16, 2025).
[9] C.H. Marrows, *Spin-polarised currents and magnetic domain walls*, Advances in Physics, vol. 52, no. 8 (2005), 585–713.
[10] B. Dieny, et al., *Introduction to Magnetic Random-Access Memory*, (IEEE Press 2017) (excerpts).
[11] E. Tsymbal, et al., *Handbook of Spin Transport and Magnetism*, (2012).

Ex. 1057, 7; Ex. 2018,[12] 187:20–190:24), 62–63 (citing Ex. 2005,[13] 39, 45; Ex. 2022,[14] 107, 110; Ex. 2023,[15] 2; Ex. 2053 ¶¶ 289, 305–306, 308).

In addition, Patent Owner argues that in recognition of "his groundbreaking work" related to the invention of the '167 patent, Dr. Yuasa was awarded or co-awarded many prizes. *See id*. at 63–65 (citing Ex. 2024,[16] 2–3; Ex. 2026,[17] 1; Ex. 2027[18]; Ex. 2028[19]; Ex. 2029,[20] 2;

---

[12] Transcript of the June 25, 2025 Deposition of Jeffrey Bokor, Ph.D.
[13] J-G Zhu & C. Park, *Review Feature: Magnetic tunnel junctions*, Materials Today, vol. 9, no. 11 (2006), 36–45.
[14] T. Nakatani, et al., *Read sensor technology for ultrahigh density magnetic recording*, MRS Bulletin, Materials Research Society, vol. 43, no. 2 (2018), 106–11.
[15] B. Jiang, et al., *Tunneling magnetoresistive devices as read heads in hard disk drives*, Journal of Magnetism and Magnetic Materials, vol. 571 (2023), 170546.
[16] *The 23rd (FY2022) Japan Society of Applied Physics Achievement Award Recipients* (with English translation), The Japan Society of Applied Physics, *available at* https://www.jsap.or.jp/outstandingachievementaward/recipients/recipients23 (captured May 28, 2025).
[17] 2021 New Fellows, IEEE Japan Council, *available at* https://ieeejp.org/en/kaiin/fellow/fellow21.html (captured June 12, 2025).
[18] *JST owned patent wins Future Creative Invention Prize at the National Invention Award 2021*, Japan Sci. and Tech. Agency, *available at* https://www.jst.go.jp/report/2021/210525_e.html (captured June 12, 2025).
[19] Dr. Shinji Yuasa profile, *available* at https://www.jst.go.jp/impact/sahashi/en/system/index.html (captured June 12, 2025).
[20] *AIST wins three Science and Technology Awards in the 2016 Minister of Education, Culture, Sports, Science and Technology Commendation for Science and Technology*, *available at* https://www.aist.go.jp/aist_j/news/prize/pr20160412_3.html (captured June 12, 2025).

Ex. 2030,[21] 3; Ex. 2031[22]; Ex. 2032,[23] 1; Ex. 2033[24]; Ex. 2034,[25] 1; Ex. 2035[26]; Ex. 2055[27]; Ex. 2053 ¶¶ 309–314).

Patent Owner argues that the claimed technology also solved a long-felt need and, in support, refers to efforts made to make MTJ devices after the discovery of the giant magnetoresistance (GMR) effect in 1998. PO Resp. 65–68. Patent Owner refers to attempts to make MTJs using MgO tunnels to achieve theoretical high TMR predictions that were unsuccessful and failed to address manufacturability problems. *Id.* at 66–67. Patent Owner alleges that the '167 patent's invention solved these long-felt but unmet needs by "provid[ing] a breakthrough for commercially manufacturing MTJs by avoiding 'strenuously high temperature deposition

---

[21] S. Yuasa, *IEEE Magnetics Society Distinguished Lecturers for 2012: Magnetoresistance and Spin-Transfer Torque in Magnetic Tunnel Junctions*, IEEE Transactions on Magnetics, vol. 48, no. 1 (2012), 3.
[22] Shinji Yuasa – IEEE Magnetics Society, *available at* https://ieeemagnetics.org/contact/shinji-yuasa#biography (captured July 8, 2025).
[23] AIST, *Winner of the 20th Tsukuba Award*, *available at* https://www.aist.go.jp/aist_j/news/prize/itemid025-000077.html (captured May 28, 2025).
[24] *Announcing the winners for "Tsukuba Prize," "Esaki Leona Prize," and "Tsukuba Encouragement Prize": Ibaraki Prefectural Science and Technology Promotion Foundation* (with English translation), *available at* https://www.tsukuba-sci.com/cms/?p=9853 (captured May 28, 2025).
[25] AIST: 34th Inoue Harunari Prize, *available at* https://www.aist.go.jp/aist_j/news/prize/itemid025-000082.html (captured May 28, 2025).
[26] *Technological seeds that overcome the valley of death* (Shinji Yuasa/Head of the Spintronics Group, National Institute of Advanced Industrial Science and Technology), *available at* https://scienceportal.jst.go.jp/explore/highlight/20090717_01/ (captured May 28, 2025).
[27] JP 5120680 B2, with certified English translation.

with single crystal structures.'" *Id.* at 67 (citing Ex. 2023, 2). "Because the claimed method used amorphous CoFeB, it allowed for the use of [a] 'conventional sputtering system instead of an MBE system,'" according to Patent Owner. *Id.* (citing Ex. 2023, 1; Ex. 2053 ¶ 323). Patent Owner contends that "[t]he '167 [p]atent's claimed methods using CoFeB electrodes achieved even higher 230% room temperature TMR," which "immediately shifted the focus of industrial and academic MTJ research and development efforts." *Id.* at 67–68 (citing Ex. 1013, 8:4–20, 9:6–27; Ex. 2006, 1–2; Ex. 2053 ¶¶ 324–325). Patent Owner contends that "skyrocketing TMR improvements focused almost entirely on CoFeB/MgO/CoFeB MTJs" after the APL paper was published. *Id.* at 68 (citing Ex. 1057, 46–47, Fig. 2.21; Ex. 2053 ¶ 325).

Patent Owner's arguments are based, in large part, on the APL paper's statement that "[s]urprisingly, the MgO layer, grown on the amorphous CoFeB layer, showed a good crystalline structure with a (001) fiber texture." Ex. 2006, 2. The Dr. Yuasa-authored chapter relies on the same reason for the alleged "surprise[e]." Ex. 1057, 47. In particular, that a MgO(001) barrier layer can be grown on the amorphous CoFeB was the reason for the "breakthrough for commercial manufacturing [of] MTJs." *See* PO Resp. 66–67. However, as discussed *infra* Section VI.C.3, the prior art Parkin patent taught the formation of a MgO(001) layer grown on amorphous CoFeB.

A showing of sufficient nexus is required in order to establish that the evidence relied upon traces its basis to a novel element in the claim, not to something in the prior art. *Institut Pasteur & Universite Pierre Et Marie Curie v. Focarino*, 738 F.3d 1337, 1347 (Fed. Cir. 2013). Objective evidence that results from something that is not "both claimed and novel in

the claim" lacks a nexus to the merits of the invention. *In re Kao*, 639 F.3d 1057, 1068 (Fed. Cir. 2011) (emphasis omitted). Thus, establishing nexus involves a showing that novel elements in the claim, not prior-art elements, account for the objective evidence of nonobviousness. *Id.* Here, Patent Owner alleges that the formation of the MgO(001) layer grown on the amorphous CoFeB described in the APL paper was the reason for industry praise and improved manufacturing, and thus solved the long-felt need, but because the growth of the MgO(001) on amorphous CoFeB was known in the prior art, as evidenced by Parkin's disclosures, then a nexus based on that factor has not been demonstrated.

Patent Owner also relies on the increase of TMR disclosed in the APL paper as the basis of industry praise and solving the long-felt need. We do not find the TMR increase to strongly favor affording substantial weight to these considerations. This is because Parkin (Ex. 1062, 18:45–46, Fig. 6) disclosed TMRs of more than 220%, which is close to the reported TMR of the APL paper of 230% (*see* Ex. 2006, Abstr.).

Patent Owner also argues that the APL paper, and its statement of the "surprising" results, should be afforded weight for industry praise because Applied Physics Letters is a prestigious journal and is peer-reviewed. *See* Tr. 64:20–25. Further, Patent Owner asserts that the APL paper has been cited extensively and no citing reference ever disputed the "surprising" result representation. *See id.* at 64:25–65:2.

We recognize that there appears to be a discrepancy between the industry recognition of the APL paper for its disclosures of a MgO(001) layer grown on the amorphous CoFeB and increased TMR and the apparent

lack of public recognition for the Parkin prior art patent,[28] which discloses the same or very similar benefits. Nonetheless, as we discuss below, Parkin explicitly discloses the benefits that Patent Owner relies upon, and, therefore, we do not find the purported secondary considerations persuasive.

VI. ALLEGED OBVIOUSNESS OVER BOWEN AND PARKIN

Petitioner argues that the combination of Bowen and Parkin renders claims 1–15 obvious. Pet. 20–48. For the reasons below, we determine for this ground that Petitioner by a preponderance of the evidence (i) shows that claims 1, 3, 5, 7–11, 14, and 15 would have been obvious and (ii) does not show that claims 2, 4, 6, 12, and 13 would have been obvious.

A. Summary of Bowen

Bowen describes that "magnetoresistance of magnetic tunnel junctions (MTJs) is of uncontested interest for important applications with, in particular, promising perspectives for the fabrication of nonvolatile memories (Magnetic RAM)" (MRAM). Ex. 1026, 1655 (footnote omitted). Bowen "present[s] tunneling experiments on Fe(001)/MgO(20 Å)/FeCo(001) single-crystal epitaxial junctions of high quality grown by sputtering and laser ablation." *Id.* at Abstr.

Bowen discloses that "numerical calculations of spin-dependent tunneling and TMR [(tunneling magnetoresistance)] have been developed for single crystal MTJs such as . . . Fe/MgO(100)," and that they "emphasize that a correct depiction of the spin-dependent tunneling properties of

[28] As discussed *supra* Section V, the references to "Parkin" in all the references cited by Patent Owner for secondary considerations are directed to Parkin's paper published in Nature Materials, not to the Parkin prior art patent. It has not been demonstrated that the disclosures in the Nature Materials article include those of the Parkin prior art patent which discloses MgO(100) layer formation over an amorphous CoFeB layer.

epitaxial MTJs must transcend the simple potential barrier image and take into account the interplay of electronic structure between metal and insulator." *Id.* at 1655 (footnotes omitted). Bowen teaches "much work has been expended to characterize the growth and electrical behavior of ultrathin MgO layers," and presents "experimental results showing large TMR values in Fe(001)/MgO(001)/FeCo(001) epitaxial tunnel junctions." *Id.*

B. Summary of Parkin

Parkin is titled "High Performance Magnetic Tunnel Barriers with Amorphous Materials." Ex. 1062, code (54). Parkin discloses a "magnetic tunneling element is constructed from a MgO or Mg-ZnO tunnel barrier and an amorphous magnetic layer in proximity with the tunnel baffler," where the "amorphous magnetic layer includes Co and at least one additional element selected to make the layer amorphous." *Id.* at code (57).

Parkin "relates to magnetic tunnel junction (MTJ) magnetoresistive (MR) devices for use as magnetic field sensors such as read heads for reading magnetically recorded data, as memory cells in nonvolatile magnetic random access memory (MRAM) cells, and for magnetic logic and spintronic applications." *Id.* at 1:13–18. Parkin explains that "[f]or applications of magnetic tunnel junctions for either magnetic recording heads or for non-volatile magnetic memory storage cells, high TMR values are needed for improving the performance of these devices." *Id.* at 2:65–3:1.

To address this, Parkin discloses "a structure that includes at least one tunnel barrier selected from the group of tunnel barriers consisting of MgO and Mg-ZnO, preferably a tunnel barrier that is oriented in the (100) direction." *Id.* at 6:20–24. This structure is disclosed as including "an amorphous magnetic layer of Co and at least one additional element selected to make the layer amorphous, in which the amorphous layer is in proximity

with the tunnel barrier, thereby permitting spin-polarized current to pass between the tunnel barrier and the magnetic layer." *Id.* at 6:24–29. Parkin states that a ferromagnetic layer may be comprised of $(Co_{73}Fe_{27})_{74}B_{26}$. *Id.* at 17:40–44. Parkin also discloses that the "structure may further include a crystalline layer sandwiched between the amorphous layer and the tunnel barrier." *Id.* at 6:35–37.

C. Challenged Claim 1

1. Manufacturing a MTJ (Preamble)

Claim 1's preamble recites "[a] method of manufacturing a magnetic tunnel junction (MTJ) device." Ex. 1013, 9:55–56. We agree with Petitioner and find that Bowen teaches a manufacturing process for fabricating a MTJ. Pet. 21–22.

In particular, we agree with Petitioner and find that Bowen teaches manufacturing a MTJ having a FeCo/MgO/Fe structure. Ex. 1026, Abstr., 1655–56; Ex. 1024 ¶ 114. We also agree that manufacturing MTJs was known and conventional. Ex. 1013, Figs. 8(A)–8(B), 1:39–64, 9:35–38; Ex. 1024 ¶¶ 118–119.

In sum, we find that Petitioner shows by a preponderance of the evidence that Bowen teaches claim 1's preamble. In light of our finding, we need not, and thus do not, reach whether claim 1's preamble is limiting.

2. Forming First CoFeB Layer

Claim 1 further recites "forming a first CoFeB layer that is amorphous." Ex. 1013, 9:57. We agree with Petitioner and find that the combination of Bowen and Parkin teaches this limitation. Pet. 22–28.

In particular, we agree with Petitioner and find that Bowen teaches forming a first (i.e., lower or closest to the substrate) Fe ferromagnetic layer

electrode. Ex. 1026, 1655–56, Abstr., Fig. 1; Pet. 23; *see also* Ex. 1008,[29] 268 (Examiner finding that "[i]t is inherent the first ferromagnetic material layer would be deposited on a substrate") (emphasis omitted).

We also agree with Petitioner and find that Parkin teaches for a MTJ "forming an 'amorphous ferromagnetic layer 175' that 'may be comprised of 75 Å thick $(Co_{73}Fe_{27})_{74}B_{26}$.'" Pet. 26 (citing Ex. 1062, 17:42–46, 19:16–17, Fig. 3A); Ex. 1024 ¶ 121 (claim does not specify any stoichiometry of the claimed CoFeB layer). Figure 3A of Parkin, shown below as annotated by Petitioner, illustrates a MTJ with a CoFeB layer electrode.

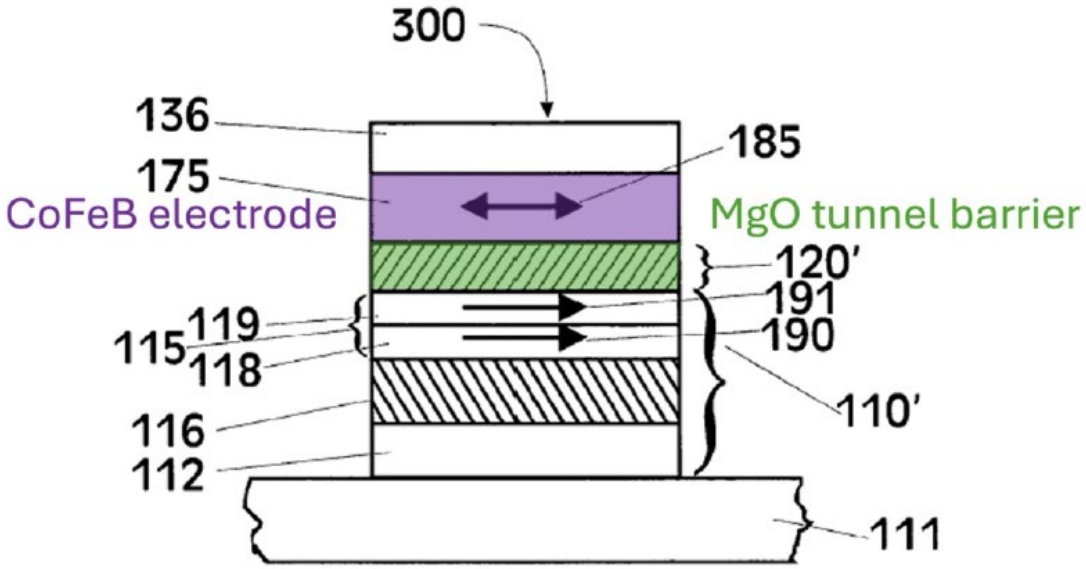

FIG. 3A

Figure 3A is a cross-sectional view of a MTJ device in accordance with Parkin's teachings. Ex. 1062, 10:31–32. Petitioner annotates the figure by (i) coloring storage layer 175 in purple and labeling it "CoFeB electrode" and (ii) coloring MgO tunnel barrier 120' in green and labeling it "MgO

[29] File History for related U.S. Patent No. 9,123,463 B2.

tunnel barrier." Pet. 26 (annotating Ex. 1062, Fig. 3A). As illustrated, the CoFeB layer is above the tunnel barrier.

We agree, however, with Petitioner that Parkin "teaches that the top and bottom electrodes in Figure 3A may be 'inverted.'" Pet. 27 (citing Ex. 1062, 17:7–10); Pet. Reply 6–7. More specifically, Parkin teaches that "[t]he MTJ device of F[igure] 3A may also be inverted, such that the reference ferromagnetic electrode is formed above the tunnel barrier and the storage layer is formed beneath the tunnel barrier." Ex. 1062, 17:7–10.

Figure 11, shown below as annotated by Petitioner, illustrates Figure 3A inverted.

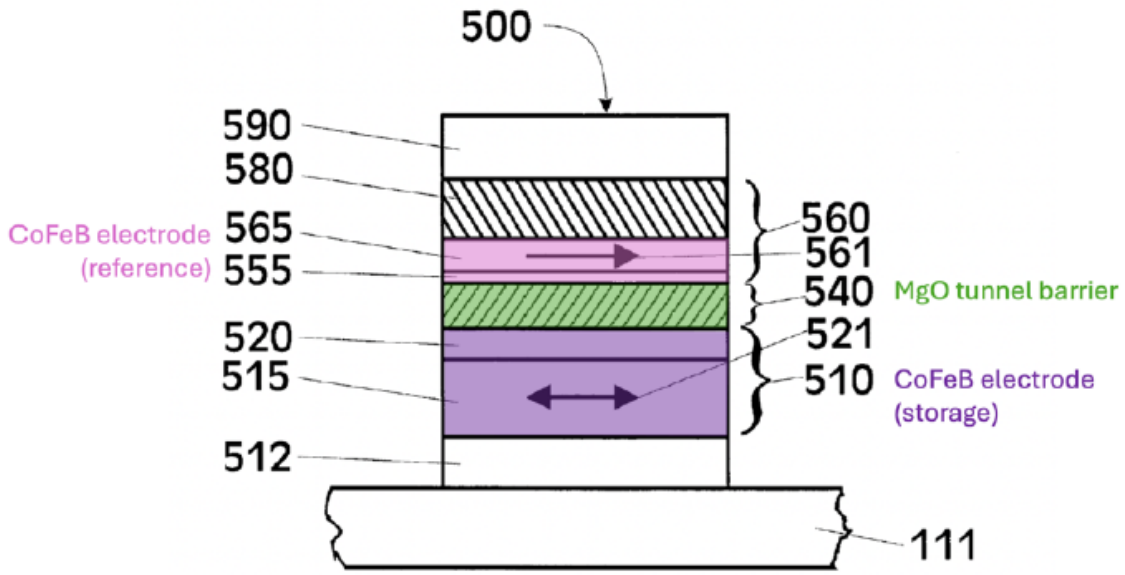

FIG. 11

Figure 11 "shows a[] representative embodiment of [Parkin's] invention in which the structure of the device[] shown in F[igure] 3A . . . is inverted so that the storage layer or electrode is formed beneath the tunnel barrier and the reference electrode is formed above the tunnel barrier." *Id.* at 22:29–33. Petitioner annotates the figure by (i) coloring storage electrode 510 in purple

and labeling it "CoFeB electrode (storage)" and (ii) coloring MgO tunnel barrier 540 in green and labeling it "MgO tunnel barrier." Pet. Reply 7 (annotating Ex. 1062, Fig. 11). We agree with Petitioner that Figure 11 illustrates Parkin's teaching of forming a MgO tunnel barrier over a CoFeB layer. Pet. Reply 7; Ex. 1062, 22:29–63, 23:6–23, Fig. 11. In other words, Parkin teaches forming a lower CoFeB layer electrode beneath the MgO tunnel barrier.

In addition, we agree with Petitioner and find that one of ordinary skill in the art "would have been motivated to replace either or both of Bowen's electrodes with CoFeB to increase TMR and lower H_f [(coupling field)] and H_c [(coercivity)]." Pet. 24, 27; Ex. 1055,[30] 2270 ("[I]t is natural to replace both the free and pinned layers to CoFeB to further increase the TMR value."); Ex. 1056[31] ¶¶ 67–68 ("[B]oth the ferromagnetic layers 5, 7 are made of an FeCoB"[32] for "improvement of the TMR ratio."); Ex. 1024 ¶¶ 129, 132. We credit Dr. Bokor's cited testimony as it is consistent with the cited evidence. Moreover, as Petitioner explains, "[r]esearchers were . . . interested in optimizing MTJs to improve MRAM performance," and "[h]igher TMRs long promised improved performance for MRAM." Pet. 6

[30] Dexin Wang et al., *70% TMR at room temperature for SDT sandwich junctions with CoFeB as free and reference layers*, 40 IEEE Trans. Magn. 2269–71 (July 2004).
[31] US 2004/0136232 A1, published July 15, 2004, to Hosomi.
[32] We find persuasive Dr. Bokor's testimony that "a skilled artisan [would have] understood that CoFeB and FeCoB refer to the same alloy." Ex. 1024 ¶ 121.

(citing Ex. 1026, 1655; Ex. 1045,[33] 1; Ex. 1049,[34] 186; Ex. 1024 ¶¶ 31, 36–44) (emphasis omitted).

In addition, we agree with Petitioner that one of ordinary skill in the art "would have found it obvious to use Parkin's CoFeB layer in place of Bowen's electrodes to increase TMR" in light of Parkin's explicit teachings. Pet. 27; Ex. 1024 ¶ 133. In particular, Parkin explicitly teaches that "very high TMR values are unexpectedly found for MTJs with highly textured (100) MgO tunnel barriers but with nominally amorphous storage layers." Ex. 1062, 18:49–51. Notably, Parkin provides that "[t]he TMR of the device of F[igure] 3A is nearly two times higher than the highest TMR ever reported in prior art devices using conventional alumina tunnel barriers." *Id.* at 18:63–65; Pet. 27. And as we discuss above, Parkin teaches that Figure 3A's MTJ may be inverted, such that the storage layer is formed beneath the tunnel barrier. Ex. 1062, 17:7–10.

In addition, we agree that one of ordinary skill in the art would have had a reasonable expectation of success in modifying Bowen in the manner Petitioner proposes, as forming electrodes with CoFeB alloys was known. Pet. 28. As Petitioner argues, "forming electrodes with CoFeB alloys in MTJs was known and had been successfully done," and thus we are persuaded that "one of skill would have found it to be a straightforward, predictable, and desirable improvement to TMR, H_f, and H_c in Bowen's

[33] M. Klaua et al., *Growth, structure, electronic, and magnetic properties of MgO/Fe(001) bilayers and Fe/MgO/Fe(001) trilayers*, 64 Phys. Rev. B. vol. 64, 134411 (2001) ("Klaua").
[34] Chang-Shuk Kim et al., *MRAM Technology for High Density Memory Application*, 2 J. Semicond. Tech. Sci. 185–96 (Sept. 2002).

MTJ." Pet. 28; Ex. 1024 ¶135; Ex. 1055, 2269–70; Ex. 1056 ¶¶ 39, 78; Ex. 1060,[35] Abstr.; Ex. 1062, 18:49–51, 18:63–19:10.

We find unavailing Patent Owner's arguments that Bowen teaches a "radically different manufacturing process[] from the claimed invention," and that Bowen "went to heroic lengths to provide a crystalline (001) bottom electrode that provides a template for epitaxially growing a crystalline MgO(001) layer." PO Resp. 2 (emphasis omitted). Patent Owner describes in detail Bowen's specific manufacturing process, including the specific structure of the MTJ manufactured, and argues the claimed invention differs. PO Resp. 30–33. These arguments are inapposite. Petitioner cites the specific teachings Petitioner relies on from Bowen, rather than adopting the entirety of Bowen's process or MTJ. *See, e.g.*, Pet. 21–36 (citing the portions of Bowen—that in combination with Parkin—teach claim 1). Petitioner is not "compelled to adopt every single aspect of [Bowen's] teaching without the exercise of independent judgment." *Lear Siegler, Inc. v. Aeroquip Corp.*, 733 F.2d 881, 889 (Fed. Cir. 1984).

We also find unavailing Patent Owner's argument that Bowen and Parkin each teach away from Petitioner's combination because Parkin used boron to avoid crystalline electrodes whereas Bowen tried to achieve perfect crystalline electrodes. PO Resp. 4. As we discuss above, one of ordinary skill in the art would have been motivated to replace Bowen's electrodes with CoFeB to increase TMR. And Patent Owner does not identify in either reference a specific teaching that criticizes, discredits, or otherwise

[35] M. Jimbo et al., *Thermal stability of spin valves using amorphous CoFeB*, 165 J. Magnetism & Magnetic Materials 308–11 (1997) ("Jimbo").

discourages modifying the references as Petitioner does in its proposed combination. *In re Fulton*, 391 F.3d 1195, 1201 (Fed. Cir. 2004).

We also find unavailing Patent Owner's arguments concerning Dr. Bokor's deposition testimony for "what would have happened if [one of ordinary skill in the art] had replaced Bowen's . . . iron bottom electrode with amorphous CoFeB and—as Bowen . . . teach[es]—annealed the bottom electrode before forming an MgO barrier layer on top of it." PO Resp. 7–8 (citing Ex. 2018, 169:16–170:12); *see also id.* at 11–12 (citing Ex. 2018, 170:13–171:19) (again asking what would happen if amorphous CoFeB was annealed prior to adding another layer). Likewise, we find unavailing Patent Owner's arguments directed to Bowen's teaching of annealing the Fe bottom electrode before depositing a MgO layer. PO Resp. 8–11. Again, Petitioner cites the specific teachings Petitioner relies on from Bowen, rather than adopting the entirety of Bowen's process or MTJ. *See, e.g.*, Pet. 21–35 (citing the portions of Bowen—that in combination with Parkin—teach claim 1). Simply put, Petitioner does not adopt Bowen's annealing before depositing a MgO layer. *Id.* We also find unavailing Patent Owner's argument that "Petitioner never modified the process in Bowen . . . to remove the step of annealing the lower electrode." PO Resp. 10; *see also id.* at 11 (citing Ex. 2018, 172:18–24, 180:24–181:8); PO Sur-reply 6. Petitioner does not adopt Bowen's entire process, but rather identifies Bowen's teachings upon which it relies. That has the effect of identifying what is not adopted, contrary to Patent Owner's arguments.

We also find unavailing Patent Owner's arguments that Petitioner's combination changes Bowen's principle of operation. PO Resp. 39–40; PO Sur-reply 6–8. These arguments also turn on Petitioner adopting

Bowen's entire manufacturing process, which Petitioner does not do. *See, e.g.*, Pet. 21–35.

Nor do we agree with Patent Owner that Petitioner relies on annealing the bottom electrode before forming the MgO layer for its proposed combination to meet other limitations of claim 1. PO Resp. 9–10 (citing Pet. 28, 30, 33); PO Sur-reply 5. Rather, Petitioner cites this teaching from Bowen to show that "[a]nnealing ferromagnetic electrodes and MgO barrier layers was known"—not for its teaching of when the annealing occurs. Pet. 30; Pet. Reply 3. Nor do we agree that Petitioner relies on Bowen's teaching of having an annealed crystalline electrode before forming the MgO layer—Petitioner cites Bowen for forming the MgO layer over the combination's bottom electrode. *See* PO Resp. 9; Pet. 28–29.

We also find unavailing Patent Owner's arguments directed to Bowen's goal, focus, or purpose. For example, Patent Owner argues that using an amorphous structure is "***the exact opposite*** of what Bowen . . . w[as] trying to achieve." PO Resp. 2–3. Patent Owner also argues that Bowen "focused on" experimentally testing calculations of the tunneling conductance and magnetoconductance of epitaxial Fe(100)/MgO(100)/Fe(100) MTJ sandwiches. *Id.* at 30. And Patent Owner argues that "[r]eplacing Bowen's single-crystal epitaxial MgO(001) barrier layer with polycrystalline MgO would frustrate Bowen's purpose of creating a single-crystal epitaxial Fe(001)/MgO(001)/FeCo(001) MTJ." *Id.* at 34. These arguments are unavailing because "[a] reference may be read for all that it teaches, including uses beyond its primary purpose." *In re Mouttet*, 686 F.3d 1322, 1331 (Fed. Cir. 2012).

In sum, we find that Petitioner shows by a preponderance of the evidence that the combination of Bowen and Parkin teaches this limitation.

3. Forming MgO Layer

Claim 1 further recites "forming a magnesium oxide (MgO) layer over the first CoFeB layer," "wherein the MgO layer is poly-crystalline in which a (001) crystal plane is preferentially oriented." Ex. 1013, 9:58–59, 9:66–67. We agree with Petitioner and find that the combination of Bowen and Parkin teaches this limitation. Pet. 28–29, 33–35; Pet. Reply 5–10.

In particular, we agree with Petitioner and find that Bowen teaches forming a MgO layer over a lower Fe layer. Ex. 1026, 1655–56, Fig. 1, Abstr. And as we discuss above, we agree that one of ordinary skill would have found it obvious to substitute Parkin's CoFeB layer for Bowen's Fe layer. *See supra* Section VI.C.2. And thus, the combination teaches forming a MgO layer over the CoFeB layer.

In addition, we agree with Petitioner and find that Bowen teaches that the MgO layer is in a single-crystal (001) form.[36] Pet. 33; Ex. 1026, Abstr., 1655; Ex. 1024 ¶ 172. We also agree that one of ordinary skill in the art would have found it "obvious to use a polycrystalline MgO with the (001) crystal plane preferentially oriented in place of Bowen's single-crystal MgO barrier." Pet. 33; Ex. 1024 ¶¶ 173–177. In particular, Bowen acknowledged that "polycrystalline MgO" could be used to obtain Bowen's barrier height of 0.9 eV. Ex. 1026, 1656 (citing Ex. 1038[37]); *see also* Ex. 1047,[38] 509, 511

---

[36] "[B]ecause MgO has a cubic crystal structure (NaCl structure), the (001) plane, the (100) plane, and the (010) plane are all equivalent." Ex. 1013, 4:39–41; Pet. 35.

[37] Jagadeesh S. Moodera & Lisa R. Kinder, *Ferromagnetic–insulator–ferromagnetic tunneling: Spin-dependent tunneling and large magnetoresistance in trilayer junctions (invited)*, 79 J. Appl. Phys. 4724–29 (Apr. 15, 1996).

[38] W. Wulfhekel et al., *Single-crystal magnetotunnel junctions*, 78 Appl. Phys. Letters 509–11 (Jan. 22, 2001).

nn.5–7 (teaching that "[s]tudies using polycrystalline MgO indicated a low tunneling barrier of ≈0.9 eV").

We also agree with Petitioner and find that one of ordinary skill in the art would have understood that substituting polycrystalline MgO for single-crystal MgO would have yielded predictable results and improved flexibility in substrate selection. Pet. 34; Ex. 1026, 1656; Ex. 1024 ¶ 175. For example, Parkin teaches that "[n]otwithstanding the polycrystalline nature of the film structures described herein, which are in any case preferable for ease of manufacturing, the method of forming the MgO (or Mg-ZnO) tunnel barrier described herein can also be applied to the growth of epitaxial single crystalline film structures." Ex. 1062, 9:58–10:2; Pet. 34. Parkin also teaches that its "preferred embodiments and implementations . . . are directed to . . . MgO . . . tunnel barrier layers which are substantially (100) oriented or textured." Ex. 1062, 14:35–38; *see also id.* at 18:49–51 ("[V]ery high TMR values are unexpectedly found for MTJs with highly textured (100) MgO tunnel barriers but with nominally amorphous storage layers."); Pet. 34–35.

In addition, we agree with Petitioner that one of ordinary skill in the art would have had a reasonable expectation of success of forming a (001) MgO layer over the first amorphous CoFeB layer. Pet. Reply 5–10. As Petitioner argues, Parkin teaches its MgO of Figure 3A is highly textured (100). Pet. 27 (citing Ex. 1062, 18:49–51 ("[V]ery high TMR values are unexpectedly found for MTJs with highly textured (100) MgO tunnel barriers but with nominally amorphous storage layers.")). And as we discuss above, Parkin teaches that Figure 3A's MTJ may be inverted, as illustrated in Figure 11, such that the amorphous CoFeB storage layer is formed beneath the tunnel barrier. *See supra* Section VI.C.2. Accordingly, as

illustrated in Figure 11, Parkin teaches that the (100) MgO tunnel barrier 540 is formed over the CoFeB storage electrode 510. *See* Ex. 1062, Fig. 11, 18:49–51, 22:56–64 ("The storage magnetic electrode 510 is formed . . . by deposition of a layer 515 comprising an amorphous ferromagnetic alloy. . . . In F[igure] 11 a layer 515 of CoFeB is deposited which is 60 Å thick."), 23:6–17 (teaching a "MgO tunnel barrier 540 is then formed").

We find unavailing Patent Owner's argument that Petitioner impermissibly makes a new argument in its Reply that "Parkin discloses forming MgO(100) on amorphous CoFeB." PO Sur-reply 11 (citing Pet. Reply 2–5). In particular, Patent Owner argues that "[t]he Reply cites ***different*** Parkin disclosure (*e.g.*, Fig. 11) uncited in the Petition to advance the ***different*** argument that Parkin teaches 'forming a polycrystalline MgO(001) tunnel barrier over an ***amorphous CoFeB*** layer.'" *Id.* at 12 (citing Pet. Reply 5–7). But, as we discuss above, the Petition provides an annotated version of Figure 3A, and argues that "Parkin itself teaches that the top and bottom electrodes in Figure 3A may be 'inverted.'" Pet. 26–27 (annotating Ex. 1062, Fig. 3A, citing 17:7–10). And Parkin teaches that Figure 11 shows Figure 3A inverted. *Id.* at 22:29–33. Moreover, the Petition includes the assertion that if Parkin's CoFeB electrodes were used to modify Bowen, the MgO would still have the same (001) orientation. Pet. 27, 33–34 (citing Ex. 1062, 9:58–10:2, 13:3–10, 18:49–51; Ex. 1013, 4:39–41). Thus, these arguments from Petitioner are not new.

We find unavailing Patent Owner's argument that Parkin and its Figure 11 do not teach that the storage electrode "remains entirely CoFeB" when beneath the MgO layer. PO Sur-reply 14. More specifically, Patent Owner argues that Figure 11 adds, as part of storage electrode 510, crystalline CoFe(001) layer 520 (which is formed over amorphous CoFeB

layer 515) to provide a template for forming MgO(001) barrier 540. *Id.* at 14–15 (citing Ex. 1062, 22:56–23:11). We find, however, that Parkin teaches that layer 520 is optional. *See* Ex. 1062, 22:56–67, Fig. 11; Ex. 2018, 134:1–135:22; Pet. Reply 7. More specifically, Parkin states that:

> The storage magnetic electrode 510 is formed on the underlayer 512 by deposition of a layer 515 comprising an amorphous ferromagnetic alloy. The electrode may be formed from a wide variety of amorphous ferromagnetic materials but particularly the family of 3d transition metal ferromagnetic alloys combined with glass forming elements, such as B, Hf, Zr and Si. In F[igure] 11 a layer 515 of CoFeB is deposited which is 60 Å thick. The composition of the layer as determined by RBS analysis is $Co_{57}Fe_{23}B_{20}$ (or $Co_{60}Fe_{40})_{80}B_{20}$ where a sputtering target with a nominal composition of $Co_{59.5}Fe_{25.5}B_{15}$ was used). An interface layer 520 of a crystalline CoFe alloy may also be used. In F[igure] 11 a layer 520 of 15 Å of $Co_{70}Fe_{30}$ was formed.

Ex. 1062, 22:56–23:1. We read "[a]n interface layer 520 of a crystalline CoFe alloy may also be used" to mean that layer 520 may or may not be used—it is optional. Our reading is consistent with Parkin's teaching that "the electrode may be formed from a wide variety of amorphous ferromagnetic materials." *Id.* at 22:58–62. That is, "the electrode" refers to that the entire storage electrode 510 may be amorphous. Also, this passage affirmatively states that "electrode 510 *is formed* . . . by deposition of a layer 515" while stating layer 520 "*may* also be used." *Id.* at 22:56–67 (emphases added). Thus, this passage supports Petitioner's assertion that the entire lower storage electrode in Parkin is amorphous CoFeB.

Further, the beginning portion of the cited passage above discusses the use of *amorphous* ferromagnetic alloys and then concludes for interface layer 520 that a *crystalline* ferromagnetic alloy may also be used as one of the layers of the electrode. *See id.* at 22:56–67. So a fair reading of the

sentence "[a]n interface layer 520 of a crystalline CoFe alloy may also be used" is that the alloy's form is the differentiating characteristic, not the use of a different material than CoFe, as Patent Owner asserts. PO Sur-reply 17.

Additionally, we credit Dr. Bokor's testimony that one of ordinary skill in the art would have understood that "an interface layer 520 of a crystalline CoFe alloy may also be used" meant that layer 520 is optional. *See* Ex. 2085,[39] 52:13–18; *see also* Ex. 2018, 134:1–135:22. This testimony is consistent with the disclosure of Parkin, as we discuss above.

We also find unavailing Patent Owner's argument that Dr. Bokor refutes Petitioner's reading of Figure 11's disclosure. PO Sur-reply 15 (citing Ex. 2085, 42:8–43:9, 43:24–44:10, 44:15–45:24). The cited testimony is limited by the questions to what Parkin's column 17, lines 7–10 discloses, and does not admit that Petitioner misreads Figure 11. We also disagree with Patent Owner that Dr. Bokor concedes that one of ordinary skill in the art could read the above passage from Parkin as saying "an interface layer of something else may also be used," instead of layer 520 being optional. PO Sur-reply 17 (citing Ex. 2085, 52:3–20, 53:3–14). Instead, Dr. Bokor clearly testifies that one of ordinary skill in the art would have understood that layer 520, if used, was not limited to CoFe—he immediately adds:

> But I also think a person of ordinary skill reading this would understand that this layer 520 might be absent. It says it may also be used, which means it might -- it may also not be used. So the interface layer 520 is optional. And it is optionally composed of crystalline cobalt iron alloy.

Ex. 2085, 52:13–20; *see also id.* at 53:3–14 (same).

---

[39] Transcript of the October 30, 2025 Deposition of Jeffrey Bokor, Ph.D.

We also find unavailing Patent Owner's argument that Dr. Bokor's testimony should be given no weight because he admitted that he is not an expert on crystal growth. PO Sur-reply 12 (citing Ex. 2018, 77:9–78:3), 19. Dr. Bokor was responding to the question of "what if you had a crystalline layer where the lattice constant was different from the material that you hoped to crystallize on top of it?," when he responded, in part, as follows:

> Well, that's a -- that's a very broad question. It's -- it's -- it's a thick topic. How you -- how crystal layers grow one on top of each other when there is not commensurate lattice constants, there's a -- there's a huge literature on that. I have -- I'm somewhat familiar on it. But I'm no expert. I'm no crystal grower. And so the question of what happens in that scenario, I can't really answer sitting here today. The answer to that, I -- I'm sure -- I could prepare, you know, a whole course on that, frankly.

Ex. 2018, 77:9–23. Notably, Patent Owner does not contend that Dr. Bokor does not meet our adopted definition of one of ordinary skill in the art. PO Sur-reply 12; *see also infra* Section XII (denying Patent Owner's Motion to Exclude).

We also find unavailing Patent Owner's argument that Petitioner's Reply never argues that layer 520 is optional. PO Sur-reply 16. In the Reply, Petitioner argues that Parkin teaches having "the storage layer . . . formed beneath the tunnel barrier," and that Patent Owner admits that Figure 11 expressly discloses an MgO(100) layer over an amorphous CoFeB layer. Pet. Reply 6–7 (citing Ex. 1062, 17:7–10, 17:19–20; IPR2024-01447, Paper 8, 47). In addition, Petitioner annotates Figure 11 by coloring the entirety of electrode 510 (including layers 515 and 520) in the same color purple, and cites Dr. Bokor's deposition testimony concerning Figure 11 and the related passage, which we discuss above. *Id.* at 7 (annotating Ex. 1062, Fig. 11;

citing Ex. 2018, 134:1–138:11). We view Petitioner's citation of this testimony to not impermissibly incorporate arguments, but rather permissibly cites evidence to support its arguments that Parkin, including Figure 11, teaches forming a MgO layer over a CoFeB layer. *See Guardant Health, Inc. v. Vidal*, No. 2021-1104, 2023 WL 3262962, at *5 n.4 (Fed. Cir. May 5, 2023) ("The Director argues Guardant improperly incorporated arguments from Dr. Quackenbush's declaration in violation of 37 C.F.R. § 42.6(a)(3)," but "[t]his argument is inapt because Guardant's response brief maps claim 1's elements . . . by relying on the evidence and expert declaration, not by incorporating legal arguments."); 37 C.F.R. § 42.6(a)(3) ("Arguments must not be incorporated by reference from one document into another document.").

We also find unavailing Patent Owner's arguments that Petitioner's arguments regarding layer 520 being optional are new. PO Mot. Strike 1, 5–6. Rather, Petitioner made these arguments in responding to Patent Owner's arguments that Parkin did not provide a reasonable expectation of success of forming a highly (001) textured MgO layer over a CoFeB layer. *See* Pet. Reply 5–7 (citing PO Resp. 13–16). As we discuss above, the Petition argues that Parkin provides for such an expectation. *See, e.g.*, Pet. 27, 33–34. Thus, we do not find that these arguments from Petitioner represent a new direction in its approach. Rather, Petitioner is arguing the same theory of unpatentability advanced in its Petition, and permissibly responding to arguments Patent Owner made in its Response.

We also find unavailing Patent Owner's argument that Parkin teaches that MgO(001) does not form on amorphous CoFeB, in light of the teachings

of Exhibits[40] 2080[41] and 2081,[42] which are applications referenced in Parkin that disclose methods by which Figure 11's MgO layer 540 may be formed. PO Sur-reply 18 (citing Ex. 1062, 23:6–11). Patent Owner contends that Petitioner's views of Parkin's teachings on MgO(001) formation as depicted in Figure 11 are inconsistent with these exhibits. *Id.* Patent Owner contends that Parkin in fact discloses methods for forming MgO, but it is formed on a crystalline(001) electrode layer by templating. *See id.* at 13–14, 18 (citing Ex. 1062, 3:24–41; Ex. 2080, 26:5–19, 58:1–5, 25:8–10, 24:21–25:1, 27:10–18, 35:10–18, 45:19–46:12; Ex. 2081, 91:5–21; Ex. 2053 ¶¶ 90–91; Ex. 2085, 55:1–56:15, 63:20–64:6, 65:21–68:7, 57:12–60:24, 68:18–70:19, 75:2–16, 97:16–98:1, 103:14–107:2).

We agree with Patent Owner that Exhibits 2080 and 2081 include several disclosures where the adjoining ferromagnetic materials and MgO tunnel barriers are 100 oriented. *See* Ex. 2080, 26:5–19, 25:8–10, 27:10–18, 35:10–18, 45:19–46:12; Ex. 2081, 91:5–21. However, Exhibit 2080 also discloses that "highly oriented (100) MgO barriers are formed without using single crystalline substrates or high deposition temperatures, thereby facilitating the manufacture of devices using standard deposition techniques *on* polycrystalline or *amorphous thermal films*," and "[p]ost anneal treatments are preferred to improve the tunneling magnetoresistance," where thermal annealing is used "so that the structure prior to annealing may not be substantially (100) oriented" but after thermal anneal treatments "the

[40] Petitioner filed a Motion to Strike these exhibits, as well as related portions of the Sur-reply. *See* Pet. Mot. Strike. As discussed *infra* in Section X, we deny this Motion.
[41] U.S. Patent Application Ser. No. 10/824,835.
[42] U.S. Patent Application Ser. No. 10/646,246.

crystallographic texture becomes substantially (100) oriented." *See* Ex. 2080, 22:23–23:4, 47:13–17 (emphases added). We agree with Petitioner that this disclosure provides support for alternate formation of MgO(001) on amorphous CoFeB that does not include forming it by templating on a crystalline ferromagnetic layer with (100) orientation. *See* Tr. 21:13–23:17.

Patent Owner also refers to Parkin's disclosure of the use of templating (epitaxy) for formation of MgO(100) on (100) textured CoFe alloy. S*ee* PO Sur-reply 13–14, 17. In support, Patent Owner relies upon Parkin's disclosure of forming highly oriented crystalline tunnel barriers on a CoFe electrode that is (100) textured. *See id.* at 13–14, 17 (citing, *inter alia*, Ex. 1062, 13:10–25). This portion of Parkin's disclosures appears to refer to the formation of Figure 2A (*see* Ex. 1062, 12:34–13:25), and Patent Owner asserts that it refers to the layers that are also shown in Figure 3A, but does not assert that this disclosure applies to all embodiments. *See* Tr. 57:17–19. Even if the disclosure was found to apply to Figure 3A, this is not sufficient to persuade us to disregard the additional explicit disclosures on amorphous CoFeB related to Figure 11 discussed above.

We also find unavailing Patent Owner's argument that although multiple publications acknowledge Parkin's work, they attribute the discovery of Mg(001) formation on amorphous CoFeB to Dr. Yuasa. PO Sur-reply 18, 28–30. Patent Owner asserts that Dr. Yuasa disclosed the claimed method of the '167 patent in the APL paper, which states that the growth of MgO(001) on CoFeB is "surprising." PO Resp. 59 (citing Ex. 2006, 2). Patent Owner contends that Dr. Yuasa's invention drew praise and attention, and Dr. Yuasa stated that a "fundamental problem" with the prior art was "a problem concerning crystal growth," and credited the

method disclosed in the APL paper as "solv[ing] this problem" "by using a sputtering deposition technique" to make a "CoFeB/MgO/CoFeB" "MTJ structure," where the "as-grown state" of the CoFeB was "amorphous," and the APL paper further states that "[s]urprisingly," the MgO barrier became "a (001)-oriented polycrystal" despite being grown on an "amorphous CoFeB" underlayer. *Id*. at 61 (citing Ex. 1057, 46–47 (Chap. 2 authored by Dr. Yuasa of Dieny book); Ex. 2053 ¶¶ 300–303).

Patent Owner refers to a paper coauthored by Chando Park of "Western Digital Corporation" that cites to the APL paper, and which states that "[t]he development of CoFeB/MgO/CoFeB tunnel junctions" disclosed by the APL paper "provides a practical solution to overcome this difficulty [of crystal growth]." *Id*. at 62 (citing Ex. 2005, 39, 45); PO Sur-reply 27–28 (citing Ex. 2005, 36, 39–40). Patent Owner also refers to a Zheng Gao paper that cited the APL paper for "the 'significance' of Yuasa's MTJ manufacturing method's using 'a fully integrated film directly produced from sensor deposition sputtering' using 'amorphous (*a*)-CoFeB . . . to promote strong (001) MgO texture in the as-deposited state' where 'post annealing transforms' the CoFeB layer to a polycrystalline layer." PO Resp. 62 (citing Ex. 2022, 107, 110); PO Sur-reply 28. Patent Owner also refers to a TDK paper that states the claimed method of the '167 patent was significant because it "used a conventional sputtering system instead of an MBE system . . . [to] achieve a giant TMR ratio with simple amorphous CoFeB ferromagnetic electrodes, instead of strenuously high temperature deposition with single crystal structures." PO Resp. 62–63 (quoting Ex. 2023, 2); PO Sur-reply 28. Patent Owner references a publication with Albert Fert as a contributor that characterized the APL paper as "an 'important breakthrough' and 'the most important step [of] the transition

from MTJ with amorphous tunnel barrier (alumina) to . . . MTJ with MgO barrier." *Id*. at 58–59 (quoting Ex. 2020, 8).

We do not agree with Patent Owner that the cited references "acknowledged" the contents of the Parkin patent, the prior art asserted here; rather the publication that Patent Owner cites to in the publications is Parkin's paper published in Nature Materials (*see* IPR2024-01447, Ex. 2060[43]). PO Sur-reply 29. More specifically, the Yuasa book chapter references the Nature Materials article, not the Parkin patent. *See* Ex. 1057, 46, 52. The references to "Parkin" in the article coauthored by Park also refer to the Nature Materials article, not to his patent. *See* Ex. 2005, 38, 45. Similarly, Gao refers only to the Nature Materials article. *See* Ex. 2022, 107, 110. And the TDK paper has the same reliance. *See* Ex. 2023, 2, 7. The Fert publication also contains no reference to the Parkin prior art patent. *See* Ex. 2020. Patent Owner does not direct us to any disclosures in Parkin's Nature Materials article that are the same or similar to those discussed above for the disclosures related to Figure 11 in the Parkin prior art patent regarding the formation of the MgO(100) layer over an amorphous CoFeB layer. As such, we find no acknowledgment in the cited publications for Parkin's prior art patent, which is at issue here.

Additionally, as Patent Owner argues, Dr. Yuasa stated in the APL paper and in a book chapter that "[s]urprisingly, the MgO barrier layer grown on the amorphous CoFeB is a (001)-oriented polycrystal (textured structure)" in reference to the APL paper, and the other publications cited by Patent Owner refer to the APL paper's disclosure of a MgO(001) layer on

[43] S.P. Parkin, et al., *Giant tunneling magnetoresistance at room temperature with MgO (100) tunnel barriers*, Nature Materials, 3 (2004), 862–67.

amorphous CoFeB. *See* PO Resp. 26, 60–65 (citing, *inter alia*, Ex. 1057, 47); PO Sur-reply 27–30. Petitioner characterized Dr. Yuasa's characterization as "self-praise" of his own purported invention. Pet. Reply 26; *see also* Tr. 35:15–17. Patent Owner argues that the APL journal was peer-reviewed and prestigious and the APL paper has been frequently cited (*see* Tr. 64:19–65:1). Patent Owner also asserts that the publications citing to the APL paper never disputed the "surprising" result, "[s]o it's not just speculation about what the sentences mean" and "[t]here's objective evidence that corroborates or confirms this was a surprising result." *Id.* at 65:1–4.

We note that the publications referring to the APL paper that are cited by Patent Owner are book chapters or articles that are reviews of the development of the progress of magnetoresistive technology. *See* Ex. 2005; Ex. 2020; Ex. 2022; Ex. 2023. The publications written by others note that the APL paper stated that it found that large TMR ratios could be obtained with crystalline MgO MTJ of very high structural quality (Ex. 2020, 8; Ex. 2023, 2; Ex. 2022, 107; Ex. 2005, 39–40), or that amorphous CoFeB was used with the formation of MgO(001) (Ex. 2002, 107; Ex. 2005, 39–40; Ex. 1057, 47–48, 52). The articles that note the "surprising" discovery therefore rely on the APL paper and its characterization of the work done, so contrary to Patent's Owner's arguments, we do not find that the citations to the APL paper represent independent corroboration of the nature of the result. Further, there are no references in the cited publications to the asserted Parkin prior art patent.

We do not speculate as to if or why reviewers were not aware of the Parkin patent, but, as we discuss above, we determine that this prior art

patent disclosed the teaching of MgO(001) formation on amorphous CoFeB prior to the '167 patent and the APL paper.

In sum, we find that Petitioner shows by a preponderance of the evidence that the combination of Bowen and Parkin teaches this limitation.

4. Forming Second CoFeB Layer

Claim 1 further recites "forming a second CoFeB layer that is amorphous over the MgO layer." Ex. 1013, 9:60–61. We agree with Petitioner and find that the combination of Bowen and Parkin teaches this limitation. Pet. 29–30.

In particular, we agree with Petitioner and find that Bowen teaches forming a second FeCo ferromagnetic layer (i.e., a top electrode) over its MgO barrier layer. *Id.* at 29; Ex. 1026, 1655–56, Abstr; Ex. 1024 ¶ 143. In addition, we agree with Petitioner and find that one of ordinary skill in the art would have been motivated to replace Bowen's top FeCo electrode layer with an amorphous CoFeB layer, as taught by Parkin, for the reasons we discuss above. *See supra* Section VI.C.2.

In sum, we find that Petitioner shows by a preponderance of the evidence that the combination of Bowen and Parkin teaches this limitation.

5. Annealing the Layers

Claim 1 further recites "annealing the first and second CoFeB layers and the MgO layer, wherein the first and second CoFeB layers are crystallized by the annealing." Ex. 1013, 9:62–65. We agree with Petitioner and find that the combination of Bowen and Parkin teaches this limitation to one of ordinary skill in the art. Pet. 30–33; Pet. Reply 3, 18–22.

In particular, we agree with Petitioner and find that "[a]nnealing ferromagnetic electrodes and MgO barrier layers was known." Pet. 30;

Ex. 1026, 1655; Ex. 1041,[44] Abstr., 131–34 (teaching annealing MgO films); Ex. 1045, 1; Ex. 1047, 509–10; Ex. 1052,[45] 4507; Ex. 1062, 7:53–59, 8:50–60; Ex. 1024 ¶¶ 151–153. For example, Bowen teaches annealing its Fe bottom layer (closest to the substrate) and MgO barrier layer. Ex. 1026, 1655 (teaching that (i) "[o]ptimal deposition temperatures were 400 °C for the MgO, [room temperature] for FeCo top electrode, and [room temperature] plus annealing at 400 °C for the Fe bottom electrode"; and (ii) "the MgO barrier is grown at 400 °C in order to obtain good crystallinity").

We also agree with Petitioner and find that "[a]nnealing CoFeB electrodes to crystallize them was also known." Pet. 30–31; Ex. 1060, 309 (CoFeB had a crystalline structure "[a]fter annealing at 400°C"), 311 ("[T]he CoFeB layer is confirmed to be amorphous in the as-deposited state and begin[s] to crystallize after annealing at 250°C."); Ex. 1061,[46] 2272–73 ("After deposition, the structures were annealed 10 min at 280 °C," and "X-ray measurements . . . confirmed that the CoFeB films are not amorphous"); Ex. 1062, 7:53–59, 8:50–67; Ex. 1024 ¶¶ 154–155, 162–166.

And we agree with Petitioner and find that it was known that a MTJ's TMR was enhanced by annealing. Pet. 31; Ex. 1026, 1655–57; Ex. 1060, 311 (teaching that the TMR was enhanced by the annealing of the CoFeB layer); Ex. 1062, 7:32–50, 7:53–59, 8:50–67; Ex. 1024 ¶¶ 155, 164–166.

---

[44] J. Wollschläger et al., *Stoichiometry and morphology of MgO films grown reactively on Ag(100)*, 142 Appl. Surface Science 129–34 (1999).
[45] J. Faure-Vincent et al., *High tunnel magnetoresistance in epitaxial Fe/MgO/Fe tunnel junctions*, 82 App. Phys. Letters 4507–4509 (June 2003).
[46] Susana Cardoso et al., *Ferromagnetic Coupling Field Reduction in CoFeB Tunnel Junctions Deposited by Ion Beam*, 40 IEEE Trans. Magn. 2272–74 (July 2004) ("Cardoso").

Notably, Parkin teaches that "[p]erformance of the MgO . . . tunnel barriers disclosed [in Parkin] may be improved through annealing, wherein performance refers to various attributes of the tunnel barrier or associated device" (e.g., "annealing a magnetic tunnel junction improves, in particular, its magneto-tunneling resistance" (TMR)). Ex. 1062, 8:50–55. Parkin also teaches that "[t]he tunnel junction may be advantageously annealed to improve its TMR, e.g., at temperature selected to yield a room temperature TMR of greater than 100%, 160%, or even 200%" (e.g., annealed at a temperature greater than 300° C, 340° C, or in the range of 300° C to 400° C). *Id.* at 7:53–59.

Accordingly, we agree with Petitioner and find that one of ordinary skill in the art would have been motivated to anneal the CoFeB layers and MgO barrier layer of Petitioner's proposed combination of Bowen and Parkin to increase TMR. Pet. 31; Ex. 1024 ¶¶ 155, 162, 164–166. As we discuss above, obtaining higher TMRs to improve performance was desired. *See supra* Section VI.C.2.

We find unavailing Patent Owner's argument that Petitioner does not "identif[y] a coherent reason ***why*** [one of ordinary skill in the art] would have modified Bowen[] to use ***amorphous*** electrodes then crystallized the electrodes based on same Bowen[] teachings that [one of ordinary skill] just altered." PO Resp. 46. Likewise, we find unavailing Patent Owner's argument that "[t]he Petition . . . argues that [one of ordinary skill in the art] would have picked CoFeB electrodes that were ***simultaneously amorphous*** (to meet 1[a] and 1[c]) and ***crystalline*** (to meet 1[d])." *Id.* at 47 (citing Ex. 2053 ¶ 238). As we discuss above, one of ordinary skill in the art would have been motivated both to replace Bowen's electrodes with amorphous CoFeB and subsequently anneal the MTJ. *See supra* Sections VI.C.2, 4.

Moreover, Parkin teaches both using amorphous CoFeB for electrodes and annealing the MTJ. *See, e.g.*, Ex. 1062, 7:32–59.

In sum, we find that Petitioner shows by a preponderance of the evidence that the combination of Bowen and Parkin teaches this limitation.

6. Summary

Weighing the record as a whole, and in view of the findings and analysis above, which includes our review of the secondary considerations arguments, we conclude that Petitioner has met its burden to show, by a preponderance of the evidence, that independent claim 1 would have been obvious over the combination of Bowen and Parkin.

D. Challenged Claims 2, 4, 6, 12, and 13

Claims 2, 4, 6, 12, and 13 each recite, *inter alia*, "wherein after the annealing, the first and second CoFeB layers are entirely crystallized." Ex. 1013, 10:1–3, 10:8–9, 10:20–21, 10:59–60, 10:61–62. For the reasons below, we determine that Petitioner does not show that these claims are unpatentable.

Petitioner asserts that Patent Owner argued in a litigation that annealing CoFeB results in ferromagnetic material layers that are entirely crystallized. Pet. 35–36 (citing Ex. 1072,[47] 6–7). Petitioner contends that skilled artisans knew the benefits of crystallized CoFeB layers for MTJs. *Id.* at 36–37 (citing Ex. 1061, 2272, 2274). Petitioner points to Cardoso where testing showed the annealed layers were crystallized and not amorphous. *Id.* at 37 (citing Ex. 1061, 2273). Petitioner also asserts that Parkin discloses that the cubic crystalline MgO layer provides a template for the formation of

[47] Claim Chart for '138 patent, Exhibit EE to First Amended Complaint, *Godo Kaisha IP Bridge 1 v. Western Digital Corporation*, 24-cv-00342-RGA (D. Del. July 8, 2024).

a thin crystalline ferromagnetic layer which has a bcc structure and orientation that is in the same (100) direction as the MgO layer. *Id.* (citing Ex. 1062, 18:55–59). Petitioner asserts that Parkin discloses that "[t]he TMR of these devices was found to increase substantially on annealing as shown in F[igure] 5." *Id.* (citing Ex. 1062, 18:47–48, Fig. 5) (emphasis omitted).

Petitioner also contends that Patent Owner never refuted that Parkin teaches the "entirely crystallized" limitations. Pet. Reply 22–23. Petitioner asserts that the experts agree that "a few monolayers" of "crystallized" CoFeB in an "otherwise amorphous" CoFeB layer satisfies the claims' requirements for entire crystallization. *Id.* at 23 (citing Ex. 1101,[48] 185:9–19, 187:4–188:2; Ex. 2053 ¶¶ 295–296; Ex. 1072, 6–7). Petitioner argues that Parkin provides more disclosure on crystallization of the CoFeB layers than the '167 patent or the APL paper. *Id.* at 22 (citing Ex. 1062, 18:49–59; Ex. 2006, 2; Ex. 1013, 9:10–18).

Patent Owner argues that no reference teaches a CoFeB alloy that is completely crystallized. PO Resp. 55–56 (citing Ex. 2053 ¶¶ 269–279). Patent Owner also contends that Petitioner's expert presents no opinion on complete crystallization. *Id.* We agree.

Cardoso discloses that upon annealing, X-ray measurements "confirmed that the CoFeB films are not amorphous." Ex. 1061, 2273. Cardoso, however, does not disclose an MTJ configuration that is exactly the same as that of the Bowen-Parkin combination. We also do not agree with Petitioner's assertion that crystallization of a portion of Parkin's layer 175

[48] Transcript of the September 18, 2025 Deposition of Caroline A. Ross, Ph.D.

meets the limitations of a "layer [that] is entirely crystallized." Parkin discloses only that a portion of the layer 175 is crystallized, and this is insufficient to support a teaching of the claim limitations of a layer that is entirely crystallized. *See* Ex. 1062, 18:51–55. In view of the failure of the references to teach that the ferromagnetic metal layer is entirely crystallized and the lack of expert testimony on the showing of the entire crystallization of the CoFeB electrode after annealing, we determine that Petitioner has not sufficiently shown that the Bowen-Parkin combination teaches "wherein after the annealing, the first and second CoFeB layers are entirely crystallized."

Accordingly, Petitioner has not shown by a preponderance of the evidence that claims 2, 4, 6, 12, and 13 are unpatentable as obvious over Bowen and Parkin.

E. Challenged Claims 3, 5, 7–11, 14, and 15

Petitioner argues that the combination of Bowen and Parkin teaches the limitations of claims 3, 5, 7–11, 14, and 15. Pet. 38–48. Claims 3, 5, and 7–10 depend from independent claim 1, and claims 14 and 15 depend from independent claim 11. Patent Owner does not provide separate arguments directed to any of these claims, but rather relies on its arguments made for independent claim 1. *See generally* PO Resp.; PO Sur-reply. As we discuss above, we find these arguments unavailing. *See supra* Section VI.C.

We have reviewed Petitioner's showings for claims 3, 5, 7–11, 14, and 15. Based on the evidence and arguments of record, we find that Petitioner shows by a preponderance of the evidence that the limitations of these claims are taught by, and the claims would have been obvious over, the combination of Bowen and Parkin.

VII. ALLEGED OBVIOUSNESS OVER BOWEN AND SUNAI

Petitioner argues that the combination of Bowen and Sunai renders claims 1–15 obvious. Pet. 20–48. For the reasons below, we determine for the combination of Bowen and Sunai that Petitioner by a preponderance of the evidence (i) shows that claims 1, 3, 5, 7–11, 14, and 15 would have been obvious and (ii) does not show that claims 2, 4, 6, 12, and 13 would have been obvious.

A. Summary of Sunai

Sunai is directed to "a magnetoresistance effect element, magnetic memory, magnetic head, and magnetic reproducing device that can maintain a sufficiently high magnetoresistance ratio and prevent an increase in the reversal magnetic field even when the size is reduced." Ex. 1030, Abstr. Sunai explains that prior art "MRAM has a problem in that when the size of the memory cell is reduced to increase the capacity, the magnetic field required to reverse the magnetization direction of the free layer, the so-called reversal magnetic field, becomes larger, and a larger write current is required." *Id.* ¶¶ 4–5, 9.

> In order to solve the above problem, [Sunai] provides a magnetoresistance effect element comprising a first ferromagnetic layer that maintains the direction of magnetization when a predetermined external magnetic field is not applied, a second ferromagnetic layer that can change the direction of magnetization when the external magnetic field is not applied, and a first tunnel barrier layer interposed between the first ferromagnetic layer and the second ferromagnetic layer, wherein the first ferromagnetic layer, the first tunnel barrier layer, and the second ferromagnetic layer form a ferromagnetic tunnel junction, and wherein the composition of the ferromagnetic material contained in the second ferromagnetic layer is expressed by the general formula $(CoFe)_{100-x}Y_x$ or the general formula

> $(CoFeNi)_{100-x}Y_x$, where Y is at least one element selected from the group consisting of B, Si, Zr, P, Mo, Al, and Nb.

Id. ¶ 11.

Sunai discloses that "[i]n a normal film formation method at room temperature, the lower limit of the film thickness at which a Co_9Fe film that does not contain B can be formed as a continuous film is about 1.5 nm." *Id.* ¶ 27. But, "when B is added to Co_9Fe, a continuous film can be formed up to a film thickness of about 0.5 nm." *Id.* ¶ 28. Sunai explains that the "reason that an extremely thin continuous film can be formed when the element Y is added is that the addition of the element Y suppresses the diffusion or movement of atoms that reach the film formation surface during the film formation process, thereby suppressing crystallization." *Id.* ¶ 30.

Conversely, Sunai states that in the prior art, when Y is not added, "when the film thickness is thinned, island structures are formed in which each island has a diameter of about several nanometers, and although each island is a ferromagnetic material, it exhibits superparamagnetism, in which the magnetization direction fluctuates, resulting in a significantly low magnetoresistance change rate." *Id.*

B. Challenged Claim 1

Petitioner argues that the combination of Bowen and Sunai teaches the limitations of claim 1. Pet. 21–35. Petitioner relies upon Bowen for teaching claim 1's limitations, except for "forming a first CoFeB layer that is amorphous" and "forming a second CoFeB layer that is amorphous over the MgO layer," for which Petitioner relies on Sunai in lieu of Parkin. *Id.* at 23–24, 30.

We agree with Petitioner that Sunai teaches forming an amorphous CoFeB ferromagnetic layer for its magnetoresistance effect element.

Ex. 1030 ¶¶ 24–30; Pet. 23–24, 30. And we find unavailing Patent Owner's argument that Sunai teaches that its CoFeB ferromagnetic layer is amorphous, and thus teaches away from CoFeB layers with crystalline structure. PO Resp. 43–44. Rather, Sunai teaches adding B to CoFe so that crystallization is inhibited when *forming* an amorphous continuous CoFeB layer; without adding B, island structures would be formed as the film thickness is thinned, causing lower TMR. Ex. 1030 ¶¶ 25, 28, 30. Patent Owner's arguments incorrectly conflate the subsequent annealing step—which crystallizes the first and second CoFeB layers and occurs after these layers are formed—with the earlier formation steps of the CoFeB amorphous layers.

Petitioner's arguments and evidence for the remaining limitations of claim 1, the rationale to combine Bowen and Sunai's teachings, and the reasonable expectation of success (including Parkin's teachings for showing the knowledge of one of ordinary skill in the art) for making the combination are the same as we discuss above for the Bowen and Parkin ground. Pet. 21–35 (arguing the Bowen and Parkin and Bowen and Sunai grounds together); *supra* Section VI.C. And Patent Owner's arguments for the Bowen and Parkin ground apply also to this ground. *See generally* PO Resp.; PO Sur-reply; *supra* Section VI.C.

Accordingly, our reasoning and findings above for the Bowen and Parkin ground also apply to this ground. *See supra* Section VI.C. And we find that Petitioner shows by a preponderance of the evidence that the combination of Bowen and Sunai renders claim 1 obvious.

C. Challenged Claims 2, 4, 6, 12, and 13

Claims 2, 4, 6, 12, and 13 each recite, *inter alia*, "wherein after the annealing, the first and second CoFeB layers are entirely crystallized." Ex. 1013, 10:1–3, 10:8–9, 10:20–21, 10:59–60, 10:61–62.

For the same reasons we discuss above for these claims for the Bowen and Parkin ground, we determine that Petitioner does not show that these claims are unpatentable for this ground. *See supra* Section VI.D.

Accordingly, Petitioner has not shown by a preponderance of the evidence that claims 2, 4, 6, 12, and 13 are unpatentable as obvious over Bowen and Sunai.

D. Challenged Claims 3, 5, 7–11, 14, and 15

Petitioner argues that the combination of Bowen and Sunai teaches the limitations of claims 3, 5, 7–11, 14, and 15. Pet. 38–48. Claims 3, 5, and 7–10 depend from independent claim 1, and claims 14 and 15 depend from independent claim 11. Patent Owner does not provide separate arguments directed to any of these claims, but rather relies on its arguments made for independent claim 1. *See generally* PO Resp.; PO Sur-reply. As we discuss above, we find these arguments unavailing. *See supra* Section VI.C & VII.B.

We have reviewed Petitioner's showings for claims 3, 5, 7–11, 14, and 15 for this ground. Based on the evidence and arguments of record, we find that Petitioner shows by a preponderance of the evidence that the limitations of these claims are taught by, and the claims would have been obvious over, the combination of Bowen and Sunai.

VIII. ALLEGED OBVIOUSNESS OVER NAGAHAMA AND PARKIN OR SUNAI

Petitioner argues that the combinations of (i) Nagahama and Parkin and (ii) Nagahama and Sunai each render claims 1–15 obvious. Pet. 49–68. For the reasons below, we determine that for both combinations Petitioner by a preponderance of the evidence (i) shows that claims 1, 3, 5, 7–11, 14, and 15 would have been obvious and (ii) does not show that claims 2, 4, 6, 12, and 13 would have been obvious.

A. Summary of Nagahama

Nagahama describes a "tunnel magnetoresistance element," where "[b]y varying only the thickness of a known material having superior magnetic characteristics to increase spin polarization without changing the chemical composition, a tunnel magnetoresistive element capable of producing a larger magnetoresistive effect is provided." Ex. 1027, code (57). Nagahama relates to tunnel magnetoresistive elements, and particularly to a ferromagnetic tunnel magnetoresistive element outputting a large signal, a tunnel magnetoresistive element in which the dependence of the magnetoresistive effect on bias voltage is controlled, and a tunnel magnetoresistive element whose crystal orientation is set to the (001) direction of a body-centered cubic lattice, a face-centered cubic lattice, or a tetragonal lattice. *Id.* ¶ 1. Nagahama describes that "[i]n order to achieve a magnetic sensor or ferromagnetic random access memory using this effect, a large magnetoresistive effect is required." *Id.* ¶ 3. But, Nagahama describes that "the tunnel magnetoresistive effect, first, has a problem in that it is limited by spin polarization." *Id.* ¶ 4. Thus, "in order to obtain a high magnetoresistive effect, a material with a high spin polarization has to be used." *Id.* ¶ 6.

Nagahama discloses a magnetoresistive element "which includes a (001)-highly-oriented lower ferromagnetic electrode layer, a (001)-highly-oriented MgO barrier layer, and a (001)-highly-oriented upper ferromagnetic electrode layer on the MgO double underlayer." *Id.* ¶ 73. Figure 17, reproduced below, illustrates this embodiment.

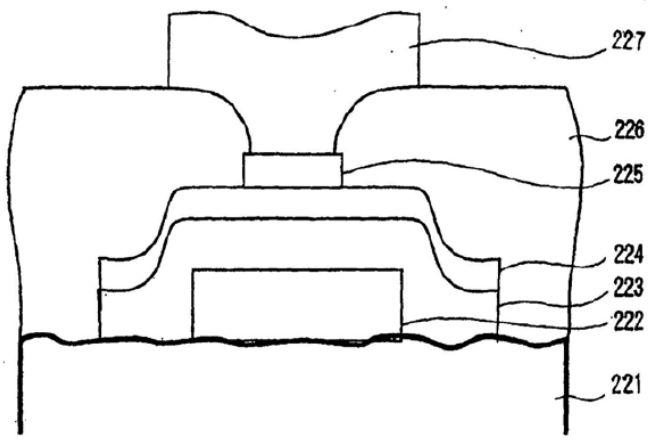

In Figure 17, above, "reference numeral 221 designates a lower electrical wire; 222, a MgO double underlayer; 223, a lower ferromagnetic electrode; 224, a barrier layer; 225, an upper ferromagnetic electrode; 226, an electrical insulating layer; and 227, an upper electrical wire." *Id.* ¶ 76.

B. Challenged Claim 1

Petitioner relies on Nagahama for teaching all the limitations of claim 1, except for the first and second amorphous CoFeB layers where Petitioner asserts that one of ordinary skill in the art would have found it obvious to replace Nagahama's ferromagnetic electrodes with amorphous CoFeB as taught by Sunai or Parkin to increase TMR. Pet. 49–58. We agree with Petitioner that the combinations of (i) Nagahama and Parkin and (ii) Nagahama and Sunai teach the limitations of claim 1.

For example, we agree with Petitioner that Nagahama discloses a polycrystalline MgO(001) tunnel barrier layer, as shown by element 224 in

Figure 17, reproduced below as annotated by Petitioner. *Id.* at 54–55 (citing Ex. 1027 ¶¶ 73–76; Ex. 1024 ¶¶ 257–258).

FIG. 17

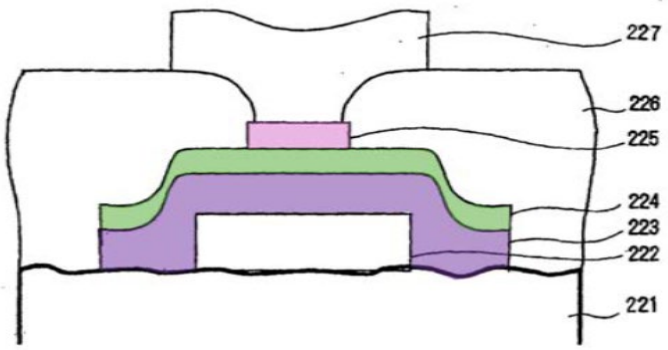

Figure 17 "is a sectional view of a high-quality tunnel magnetoresistive element having an amorphous (001)-highly-oriented MgO composite underlayer on a polycrystalline metal electrical wire with a rough surface, according to" Nagahama's teachings. Ex. 1027 ¶ 19. More specifically, the figure illustrates a section of a tunnel magnetoresistive element with lower electrical wire 221, MgO double underlayer 222, lower ferromagnetic electrode 223 (colored in dark purple), barrier layer 224 (colored in green), upper ferromagnetic electrode 225 (colored in light purple), electrical insulating layer 226, and upper electrical wire 227. *Id.* ¶¶ 75–76; Pet. 56 (annotating Ex. 1027, Fig. 17).

We agree with Petitioner and find that Nagahama teaches forming a lower ferromagnetic electrode for its MTJ. Pet. 50–51 (citing Ex. 1027 ¶¶ 22, 62, 73, 75–76, Figs. 3, 17). Nagahama teaches that this lower ferromagnetic electrode may comprise Fe, Co, Ni, or an alloy of these metals. Ex. 1027 ¶¶ 28, 31, 61, 68, Fig. 17. For the reasons we discuss above, we agree with Petitioner and find that one of ordinary skill in the art "would have found it obvious to replace Nagahama's lower ferromagnetic

electrode material with amorphous CoFeB, as taught by Sunai or Parkin to increase TMR and lower the H_f and H_c. Pet. 51 (citing Ex. 1030 ¶¶ 24–29; Ex. 1062, 17:40–50, 19:16–17, Fig. 3A); *see supra* Section VI.C.2. More specifically, for the reasons we discuss above, we agree with Petitioner and find that "one of skill would have been motivated to replace either or both of Nagahama's electrodes with CoFeB to increase TMR." Pet. 53 (citing Ex. 1062, 17:7–10, and arguing that Parkin teaches "Fig. 3A top and bottom electrodes [that] may be 'inverted'"); *see supra* Section VI.C.2.

Moreover, Nagahama teaches forming an MTJ with an MgO layer over a lower ferromagnetic layer: a "magnetoresistive element was prepared which includes . . . a (001)-highly-oriented MgO barrier layer." Ex. 1027 ¶¶ 21–22, 73–76, Figs. 3, 17; Pet. 54. For the reasons we discuss above, we agree with Petitioner and find that one of ordinary skill in the art would have had a reasonable expectation of success for forming the MgO(001) layer over the amorphous CoFeB layer in the combination of Nagahama with Parkin or Sunai. *See supra* Section VI.C.2–3; Pet. 53 (citing, *inter alia*, Ex. 1062, 17:7–10, 17:40–50, 19:16–17, Fig. 3A).[49]

In addition, we agree with Petitioner and find that Nagahama teaches forming an upper ferromagnetic electrode over its MgO barrier layer, and that one of skill would have been motivated to replace Nagahama's upper

[49] We note that in IPR2024-01447 we found that Petitioner did not meet its burden to show a reasonable expectation of success for the formation of a MgO(001) layer. *See* IPR2024-01447, Paper 53, 48–49. Unlike here, however, the petition in IPR2024-01447 did not expressly cite Parkin's teachings relating to its Figure 3A, and that it could be inverted. *Compare* IPR2024-01447, Paper 1 at 50–61, *with* Pet. 53.

ferromagnetic electrode layer with an amorphous CoFeB layer from Sunai or Parkin for the same reasons we discuss above. *See* Pet. 55–56; Ex. 1027 ¶¶ 22, 62, 73, 75–76, Figs. 3, 17; *see supra* Sections VI.C.2, 4.

For the reasons we discuss above, we also agree with Petitioner that annealing ferromagnetic electrodes and MgO barrier layers, and crystallizing CoFeB electrodes by annealing, were known. *See supra* VI.C.5. Moreover, Nagahama also teaches that annealing ("heat treatment") nets "a larger tunnel magnetoresistive effect of more than 90%." Ex. 1027 ¶ 74; Pet. 57. For the same reasons we discuss above, we find that one of skill would have been motivated to anneal the combination of Nagahama and Sunai or Parkin to crystallize the CoFeB layers, improve TMR, and lower H_f and H_c. *See supra* VI.C.5.

In addition, we agree with Petitioner and find that Nagahama teaches a polycrystalline "(001)-highly-oriented MgO barrier layer" for its MTJ. *See* Ex. 1027 ¶ 73; Ex. 1024 ¶¶ 282–83. And we find persuasive Dr. Bokor's testimony that "because single-crystal layers have equivalent orientations throughout the crystalline lattice, the term 'highly-oriented' is used to describe the predominant orientation of a polycrystalline layer containing many crystals." Ex. 1024 ¶ 283.

Patent Owner's arguments for the Bowen and Parkin ground largely apply also to this ground. *See generally* PO Resp.; PO Sur-reply; *supra* Section VI.C. Accordingly, our reasoning and findings above for those arguments also apply to this ground. *See supra* Section VI.C.

In sum, we find that Petitioner shows by a preponderance of the evidence that the combinations of (i) Nagahama and Parkin and (ii) Nagahama and Sunai each render obvious claim 1.

C. Challenged Claims 2, 4, 6, 12, and 13

Claims 2, 4, 6, 12, and 13 each recite, *inter alia*, "wherein after the annealing, the first and second CoFeB layers are entirely crystallized." Ex. 1013, 10:1–3, 10:8–9, 10:20–21, 10:59–60, 10:61–62. Petitioner relies on a similar rationale for teaching "entirely crystallized"; that is, Patent Owner's view of what that term meant in a district court case. *See* Pet. 58.

For the same reasons we discuss above for these claims for the Bowen and Parkin ground, we determine that Petitioner does not show that these claims are unpatentable in view of either the combination of (i) Nagahama and Sunai or (ii) Nagahama and Parkin. *See supra* Section VI.D.

D. Challenged Claims 3, 5, 7–11, 14, and 15

Petitioner argues that the combinations of (i) Nagahama and Sunai and (ii) Nagahama and Parkin each teaches the limitations of claims 3, 5, 7–11, 14, and 15. Pet. 58–68. Claims 3, 5, and 7–10 depend from independent claim 1, and claims 14 and 15 depend from independent claim 11. Patent Owner does not provide separate arguments directed to any of these claims, but rather relies on its arguments made for independent claim 1. *See generally* PO Resp.; PO Sur-reply. As we discuss above, we find these arguments unavailing. *See supra* Section VI.C.

We have reviewed Petitioner's showings for claims 3, 5, 7–11, 14, and 15 for these grounds. Based on the evidence and arguments of record, we find that Petitioner shows by a preponderance of the evidence that the limitations of these claims are taught by, and the claims would have been obvious over, the combinations of (i) Nagahama and Sunai and (ii) Nagahama and Parkin.

IX. ALLEGED OBVIOUSNESS GROUNDS INVOLVING SOUKUP

Petitioner argues that the combinations of (i) Bowen, Parkin, and Soukup; (ii) Bowen, Sunai, and Soukup; (iii) Nagahama, Parkin, and Soukup; and (iv) Nagahama, Sunai, and Soukup each render claims 7, 8, and 14 obvious. *See* Pet. 41–44, 48, 61–64, 68. Claims 7 and 8 depend from independent claim 1, and claim 14 depends from independent claim 11.

For these four asserted grounds, we have reviewed Petitioner's showings for each of these challenged claims. Pet. 41–44, 48. Patent Owner does not provide separate arguments for these dependent claims.

Based on the evidence and arguments of record, we find that Petitioner demonstrates by a preponderance of the evidence that each of these four grounds renders obvious claims 7, 8, and 14, and that one of ordinary skill in the art would have been motivated to combine the references of the asserted combinations in the manner Petitioner does with a reasonable expectation of success.

X. PETITIONER'S MOTION TO STRIKE

Petitioner moves to strike Exhibits 2080 and 2081 and portions of Patent Owner's Sur-reply that rely on these exhibits. Pet. Mot. Strike 1. Petitioner argues that there is good cause to strike these exhibits because they were filed with Patent Owner's Sur-reply, and the filing was not authorized by the Board. *Id.* at 1–2. Petitioner contends that Patent Owner had knowledge that it was required to seek prior authorization, and indicated that it would seek to do so by email with Petitioner, but instead filed the exhibits with its Motion to Strike, which was not authorized by the Board. *Id.* at 2 (citing Ex. 3102). Petitioner asserts that the filing is contrary to the requirements of 37 C.F.R. § 42.23(b) and the Consolidated Trial Practice Guide ("CTPG"). *Id.* (citing 37 C.F.R. § 42.23(b); CTPG § II.I). Petitioner

contends that Patent Owner forfeited its opportunity to submit these exhibits by not filing them with its Response, when it was already aware that Figure 11 of Parkin was at issue because Patent Owner itself had addressed Figure 11 issues in its Preliminary Response in co-pending IPR2024-01447. *Id*. at 3 (citing IPR2024-01447, Paper 8 at 44–47). Petitioner alleges that it is "highly prejudiced" and has been "sandbagged" by the untimely submission of the exhibits because it could not meaningfully address Patent Owner's late filings. *Id*. at 4. Petitioner also contends that the late admission of exhibits violates the Administrative Procedure Act (APA) by denying Petitioner notice and fair opportunity to address the exhibits. *Id*. at 4–5 (citing, *inter alia*, 5 U.S.C. §§ 554(b)–(c), 556(d)).

Patent Owner asserts that Petitioner's Reply presented new allegations and it used the exhibits at issue to attempt to impeach Petitioner's expert, Dr. Bokor, at deposition and Dr. Bokor testified that he had reviewed the exhibits prior to the deposition. *Id.* at 1–3. Patent Owner argues that it is not belatedly presenting new evidence because the exhibits are incorporated as part of the Parkin patent (Ex. 1062), and Petitioner should have filed these exhibits with its Petition. PO Opp. 3. Patent Owner contends that the Board did not prohibit the submission of the exhibits with its motion to strike, and the exhibits are not new because they were cited in Patent Owner's motion papers. *Id*. at 4–5. Patent Owner also asserts that, even if the Board were to find that Patent Owner should not have submitted the exhibits, the argument should not be struck because it is properly presented in response to new arguments in Petitioner's Reply. *Id*. at 5–7.

Rule 42.23(b) states that "[a] sur-reply may only respond to arguments raised in the corresponding reply and *may not be accompanied by new evidence* other than deposition *transcripts* of the cross-examination of

any reply witness." 37 C.F.R. § 42.23(b) (emphasis added). The CTPG mirrors the Rule's language and further states that "[s]ur-replies should only respond to arguments made in reply briefs, comment on reply declaration testimony, or point to cross-examination testimony." CTPG § II.I.

It would have been prudent for Patent Owner to seek the Board's authorization to file the exhibits with its motion to strike papers and with its Sur-reply. Instead, Patent Owner used a route where the exhibits were first presented at a deposition of Petitioner's expert, then filed along with a motion to strike, and then referred to in Patent Owner's Sur-reply.[50] A concern is lack of notice and prejudice to Petitioner. As previously stated in a Board decision, which addressed filing deposition exhibits with the sur-reply, permitting the filing of deposition exhibits "would give parties the incentive to raise completely new evidence during a deposition, and then introduce that evidence into the record with a sur-reply, depriving the opposing party the opportunity to fully address that evidence." *Ascend Performance Materials Operations LLC v. Samsung SDI Co.*, IPR2020-00349, Paper 53 at 11–13 (PTAB July 15, 2021) (Final Written Decision).

Nevertheless, under these specific circumstances, we decline to strike Exhibits 2080 and 2081 and associated arguments from the record. The exhibits are cited in Parkin's discussion of Figure 11 and, specifically, are included in a discussion of Figure 11's tunnel barrier. *See* Ex. 1062, 23:6–11.[51] As discussed *supra* Section VI.C.2, Petitioner relies upon the

---

[50] The Board did not grant leave to file new evidence with Patent Owner's Motion to Strike (*see* Paper 29, 3–4), but we need not need address that issue to decide the motion.

[51] Ex. 2080 is Application No. 10/824,835 and Ex. 2081 is Application No. 10/646,246.

teachings relating to Figure 11 as part of its showing as to the obviousness of the claims, and Dr. Bokor presented opinions on teachings relating to Figure 11. *See*, *e.g.*, Ex. 1024 ¶¶ 105, 131–136; Ex. 2018, 134:9–139:22; Ex. 2085, 48:18–66:8, 107:16–115:20. Given the relevance of the exhibits to Dr. Bokor's opinions, we determine that it is permissible that Patent Owner filed the exhibits to allow the Board to consider the context of the testimony. We note that we limit this determination to the specific facts of this case.

Accordingly, Petitioner's Motion to Strike is *denied*.

XI. PATENT OWNER'S MOTION TO STRIKE

Patent Owner filed a Motion to Strike portions of Petitioner's Reply, Exhibits 1097–1099, and portions of Exhibits 1105 and 2018. PO Mot. Strike 1. Patent Owner alleges that the motion should be granted because the Reply relies upon a new theory that was not in previous briefing and advances new arguments based on new evidence. *Id*. at 1–8. In particular, Patent Owner argues that Petitioner makes new arguments concerning (i) Parkin's teaching of forming MgO (001) over amorphous CoFeB, and (ii) new prior art disclosing that MgO(001) formed on ***different*** substrates provided a reasonable expectation that MgO(001) would form on amorphous CoFeB. *See, e.g.*, *id.* at 4.

As to the arguments about Parkin's teachings, we address those above and find that Petitioner's arguments (and cited evidence) are permissible. *See supra* Section VI.C.2. As to the arguments about prior art disclosing that MgO(001) formed on different substrates so as to provide a reasonable expectation of success, we find the arguments and cited evidence permissible. *See id.* Petitioner makes these arguments in responding to Patent Owner's arguments that there was no reasonable expectation of

success of forming a highly (001) textured MgO layer over a CoFeB layer. And we do not find that these arguments from Petitioner represent a new direction in its approach. Rather, Petitioner is permissibly responding to arguments Patent Owner made in its Response.

Accordingly, Patent Owner's Motion to Strike is *denied*.

XII. PATENT OWNER'S MOTION TO EXCLUDE

Patent Owner filed a Motion to Exclude portions of Dr. Bokor's alleged new testimony on whether a person of ordinary skill in the art would have reasonably expected MgO(001) to form on amorphous surfaces including CoFeB. PO Mot. Excl. 1. Specifically, Patent Owner seeks to exclude portions of Dr. Bokor's Reply Declaration (Ex. 1105 ¶¶ 6–30), which are relied on in Petitioner's Reply (pages 7–11). *Id*. Patent Owner contends that Dr. Bokor's testimony does not meet the requirements of Federal Rule of Evidence 702 because it is not based on sufficient facts or data and does not meet reliability requirements. *See id*. at 1–2. Patent Owner, in part, asserts that Dr. Bokor is not qualified to opine on MgO thin film crystal formation because he admitted that he was "no expert. I'm no crystal grower." *Id*. at 2, 12 (citing Ex. 2018, 77:9–78:3; Ex. 2085, 156:23–157:11). Patent Owner contends that Dr. Bokor did not rely on sufficient supporting facts because no reference taught forming MgO(001) on CoFeB; there was no consideration of how amorphous CoFeB would affect crystal formation because, as admitted, substrate material was crucial; and the relied-upon references did not provide a sufficient basis or support the testimony. *Id*. at 3–10. Patent Owner further argues that the testimony is not the product of any scientific principle or method. *Id*. at 10–12. And Patent Owner asserts that Dr. Bokor has no specialized knowledge helpful to understand MgO formation on amorphous CoFeB. *Id*. at 12–15. Patent

Owner also argues that Dr. Bokor's testimony is not admissible under Federal Rule of Evidence 701 as lay opinion. *Id*. at 15.

As we discuss above, *supra* Section VI.C.2, we determine that Petitioner's arguments and evidence in the Reply properly respond to arguments made on contested issues. Patent Owner has not disputed that Dr. Bokor is qualified as a person of ordinary skill in the art under the qualifications adopted for the purposes of this proceeding. *See* Tr. 90:9–15. Patent Owner instead objects to Dr. Bokor's testimony to the extent he testifies on crystal growth. *See id*.

The Board acts as both the gatekeeper of evidence and the weigher of evidence. "The policy considerations for excluding expert testimony, such as those implemented by the gatekeeping framework established by the Supreme Court in *Daubert v. Merrell Dow Pharm., Inc*., 509 U.S. 579 (1993), are less compelling in bench proceedings such as *inter partes* reviews than in jury trials." *See Nestle Healthcare Nutrition, Inc. v. Steuben Foods, Inc*., IPR2015-00249, Paper 76 at 23 (PTAB June 2, 2016). We take into account the qualifications of an expert witness—and any shortcomings—when evaluating the weight to be given that witness's testimony. Additionally, we weigh the testimony regarding each particular issue on which Dr. Bokor opines considering factual corroboration based on the underlying facts of record, as well as the cohesiveness of the articulated reasoning. *See In re Acad. of Sci. Tech Ctr*., 367 F.3d 1359, 1368 (Fed. Cir. 2004) ("[T]he Board is entitled to weigh the declarations and conclude that the lack of factual corroboration warrants discounting the opinions expressed in the declarations."); *see also* 37 C.F.R. § 42.65(a) ("Expert testimony that does not disclose the underlying facts or data on which the opinion is based is entitled to little or no weight."); *cf. In re Magnum Oil Tools Int'l, Ltd*.,

829 F.3d 1364, 1380 (Fed. Cir. 2016) (Petitioner's burden of proving obviousness cannot be satisfied by mere conclusory statements).

Accordingly, Patent Owner's Motion to Exclude is *denied*.

XIII. CONCLUSION[52]

Based on the full record, we determine that by a preponderance of the evidence Petitioner (i) shows that challenged claims 1, 3, 5, 7–11, 14, and 15 are unpatentable and (ii) does not show that claims 2, 4, 6, 12, and 13 are unpatentable. We deny Petitioner's Motion to Strike, Patent Owner's Motion to Strike, and Patent Owner's Motion to Exclude.

Claim(s)	35 U.S.C. §	Reference(s) /Basis	Claim(s) Shown Unpatentable	Claims Not Shown Unpatentable
1–15	103(a)	Bowen, Parkin	1, 3, 5, 7–11, 14, 15	2, 4, 6, 12, 13
1–15	103(a)	Bowen, Sunai	1, 3, 5, 7–11, 14, 15	2, 4, 6, 12, 13
7, 8, 14	103(a)	Bowen, Parkin, Soukup	7, 8, 14	
7, 8, 14	103(a)	Bowen, Sunai, Soukup	7, 8, 14	
1–15	103(a)	Nagahama, Parkin	1, 3, 5, 7–11, 14, 15	2, 4, 6, 12, 13
1–15	103(a)	Nagahama, Sunai	1, 3, 5, 7–11, 14, 15	2, 4, 6, 12, 13

[52] Should Patent Owner wish to pursue amendment of the challenged claims in a reissue or reexamination proceeding subsequent to the issuance of this decision, we draw Patent Owner's attention to the April 2019 *Notice Regarding Options for Amendments by Patent Owner Through Reissue or Reexamination During a Pending AIA Trial Proceeding*. *See* 84 Fed. Reg. 16,654 (Apr. 22, 2019). If Patent Owner chooses to file a reissue application or a request for reexamination of the challenged patent, we remind Patent Owner of its continuing obligation to notify the Board of any such related matters in updated mandatory notices. *See* 37 C.F.R. § 42.8(a)(3), (b)(2).

7, 8, 14	103(a)	Nagahama, Parkin, Soukup	7, 8, 14	
7, 8, 14	103(a)	Nagahama, Sunai, Soukup	7, 8, 14	
Overall Outcome			1, 3, 5, 7–11, 14, 15	2, 4, 6, 12, 13

XIV. ORDER

In consideration of the foregoing, it is hereby

ORDERED that Petitioner has shown by a preponderance of the evidence that claims 1, 3, 5, 7–11, 14, and 15 of the ’167 patent are unpatentable;

FURTHER ORDERED that Petitioner has not shown by a preponderance of the evidence that claims 2, 4, 6, 12, and 13 of the ’167 patent are unpatentable;

FURTHER ORDERED that Petitioner’s Motion to Strike is *denied*;

FURTHER ORDERED that Patent Owner’s Motion to Strike is *denied*;

FURTHER ORDERED that Patent Owner’s Motion to Exclude is *denied*; and

FURTHER ORDERED that parties to the proceeding seeking judicial review of this Final Written Decision must comply with the notice and service requirements of 37 C.F.R. § 90.2.

For PETITIONER:

Michelle Armond
Douglas Wilson
Josepher Li
Monica Arnold
Yue Han
ARMOND WILSON LLP
michelle.armond@armondwilson.com
doug.wilson@armondwilson.com
josepher.li@armondwilson.com
monica.arnold@armondwilson.com
amy.han@armondwilson.com

For PATENT OWNER:

Gerald Hrycyszyn
Jie Xiang
Richard F. Giunta
Adam R. Wichman
Thomas A. Franklin
Scott A. McKeown
WOLF GREENFIELD & SACKS, P.C.
ghrycyszyn-ptab@wolfgreenfield.com
jxiang-ptab@wolfgreenfield.com
rgiunta-ptab@wolfgreenfield.com
awichman-ptab@wolfgreenfield.com
tfranklin-ptab@wolfgreenfield.com
smckeown-ptab@wolfgreenfield.com