US 20060003185A1

(19) United States

(12) Patent Application Publication

(10) Pub. No.: US 2006/0003185 A1

(43) Pub. Date: Jan. 5, 2006

Parkin

(54) HIGH PERFORMANCE MAGNETIC TUNNEL BARRIERS WITH AMORPHOUS MATERIALS

(76) Inventor: Stuart Stephen Papworth Parkin, San Jose, CA (US)

Correspondence Address:
DANIEL E. JOHNSON
IBM CORPORATION, ALMADEN RESEARCH CENTER
INTELLECTUAL PROPERTY LAW DEPT.
C4TA/J2B
650 HARRY ROAD
SAN JOSE, CA 95120-6099 (US)

(21) Appl. No.: 10/884,831

(22) Filed: Jul. 2, 2004

Publication Classification

(51) Int. Cl.
B32B 9/04 (2006.01)

(52) U.S. Cl. 428/692.1; 428/704

(57) ABSTRACT

A magnetic tunneling element is constructed from a MgO or Mg—ZnO tunnel barrier and an amorphous magnetic layer in proximity with the tunnel barrier. The amorphous magnetic layer includes Co and at least one additional element selected to make the layer amorphous. Magnetic tunnel junctions formed from the amorphous magnetic layer, the tunnel barrier, and an additional ferromagnetic layer have tunneling magnetoresistance values of up to 200% or more.

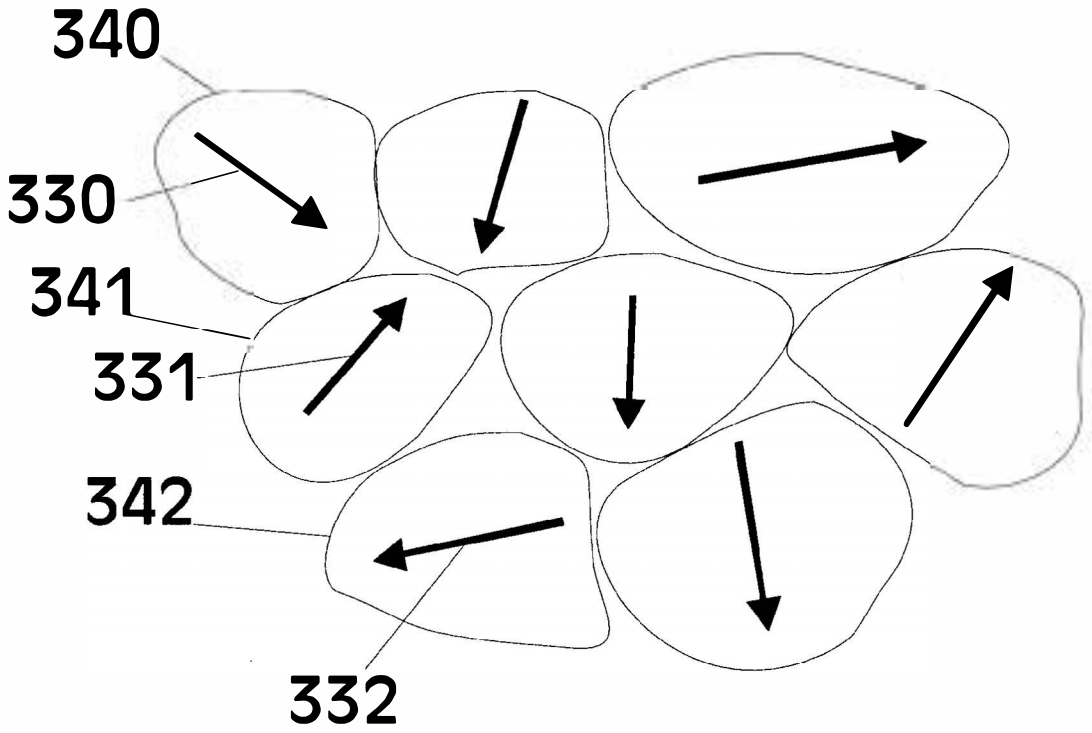

IP Bridge Exhibit 2040
Western Digital v. IP Bridge
IPR2024-01494

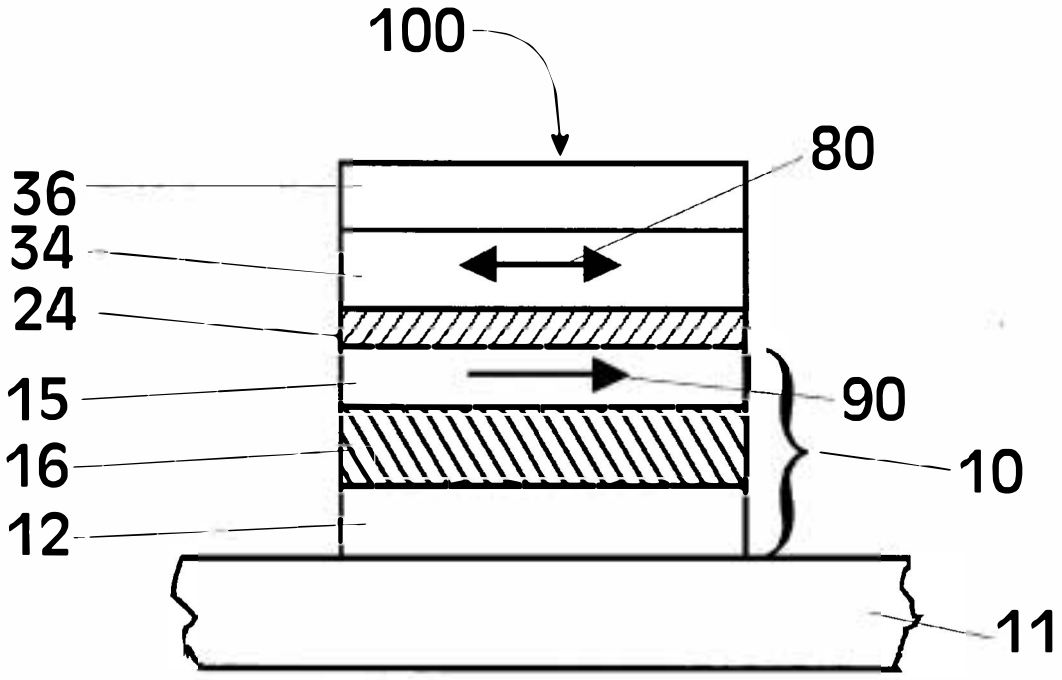

FIG. 1A (PRIOR ART)

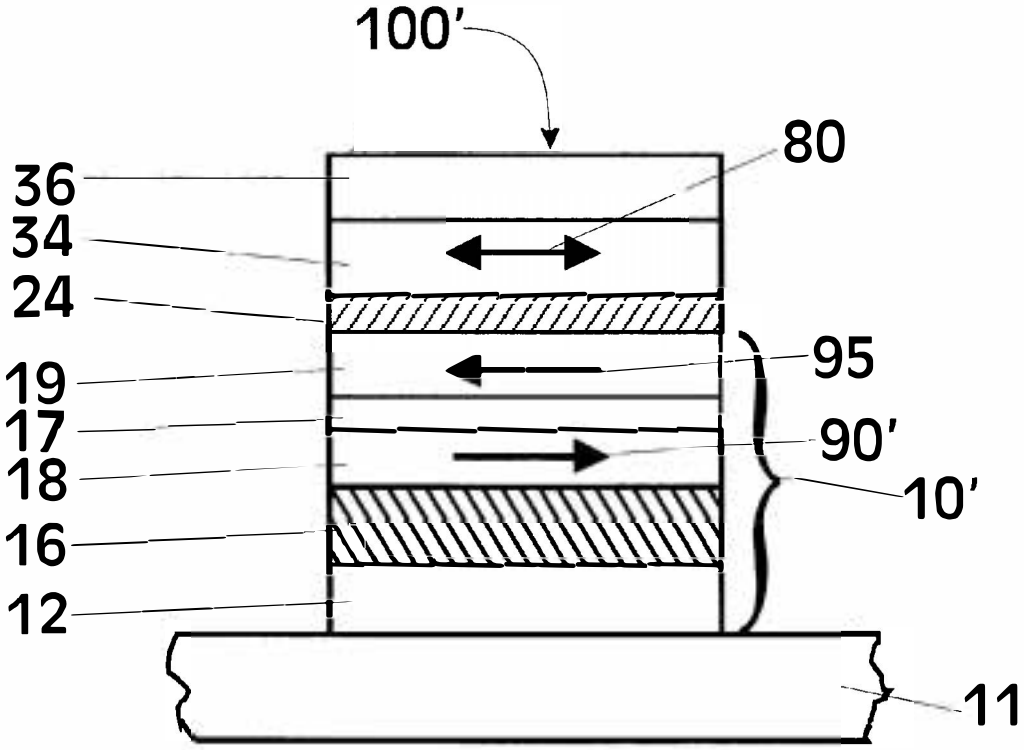

FIG. 1B (PRIOR ART)

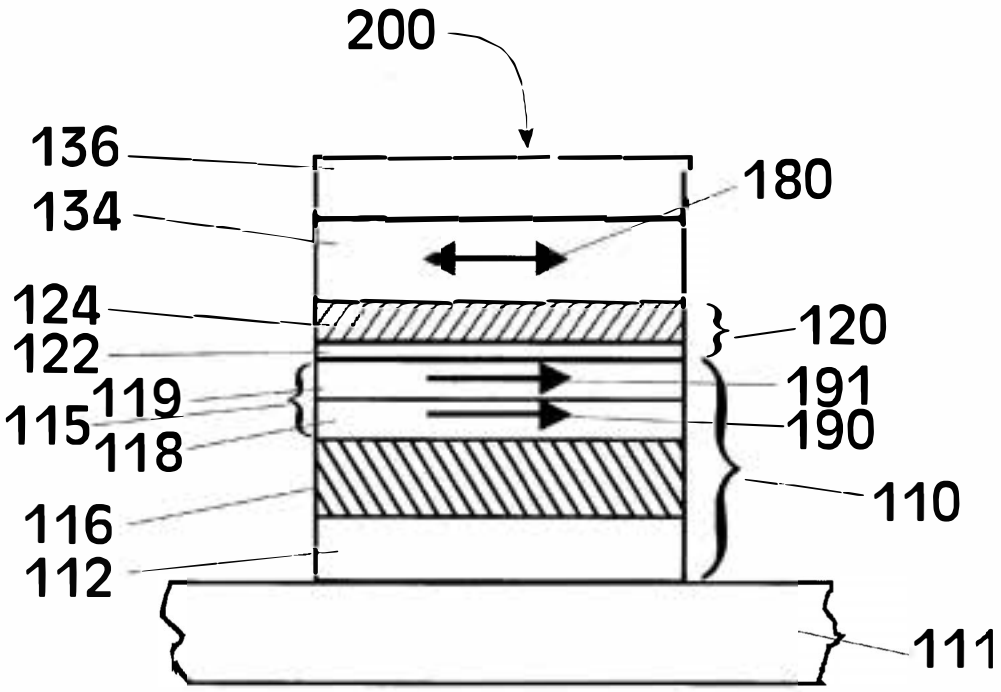

FIG. 2A

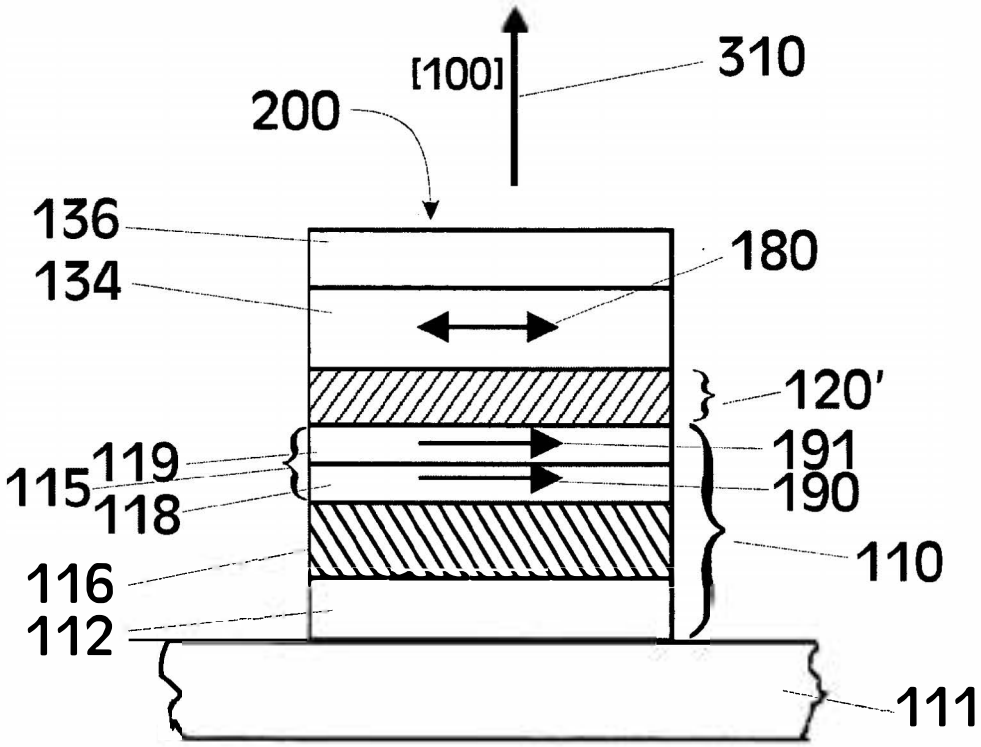

FIG. 2B

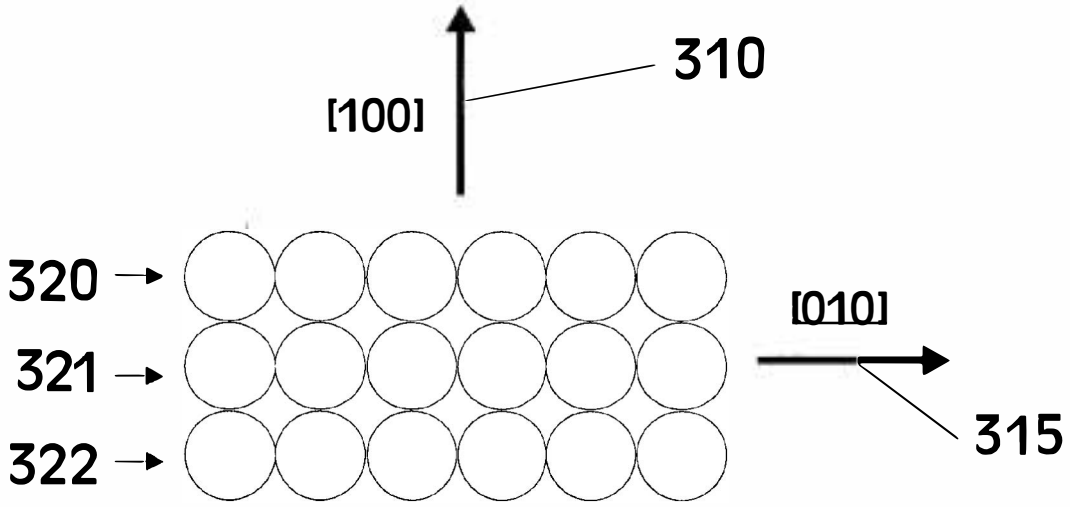

FIG. 2C

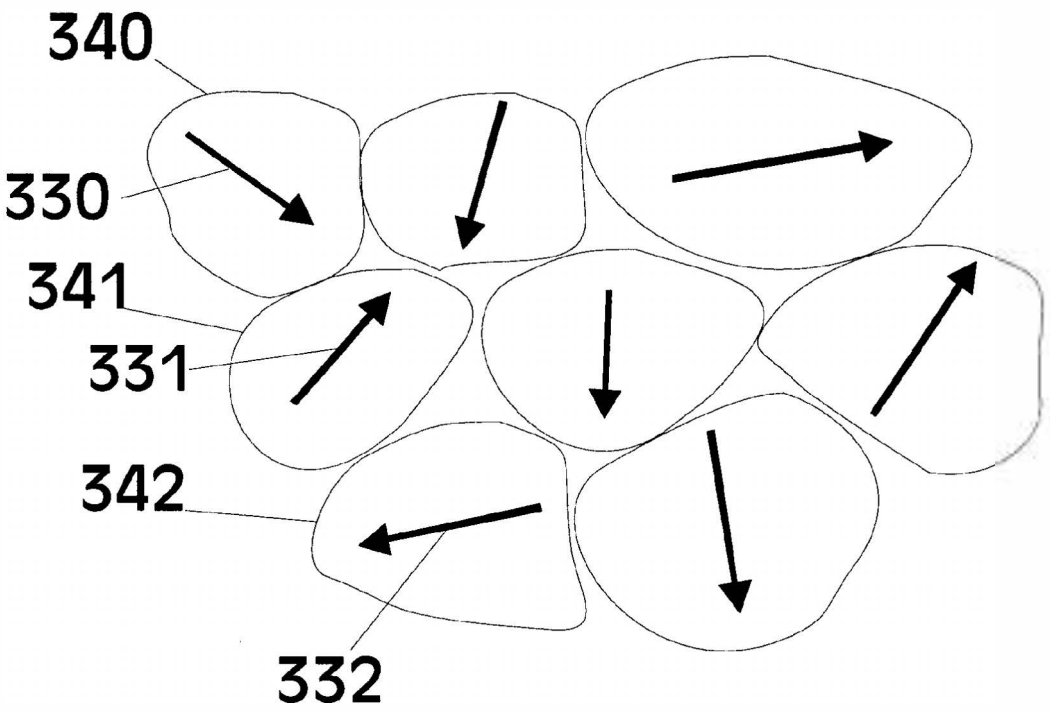

FIG. 2D

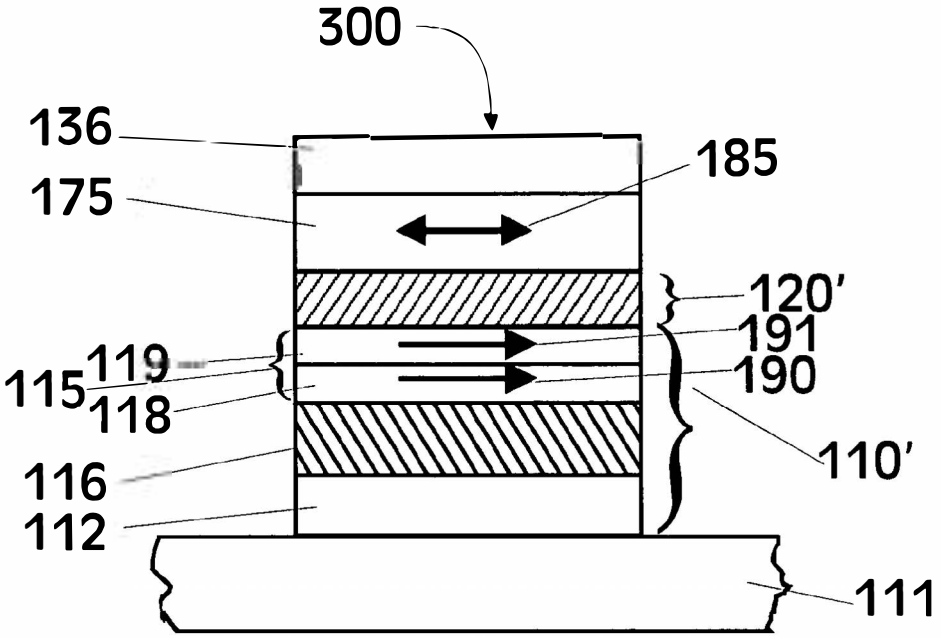
300
136
175
185
120'
191
190
119
115
118
110'
116
112
111

FIG. 3A

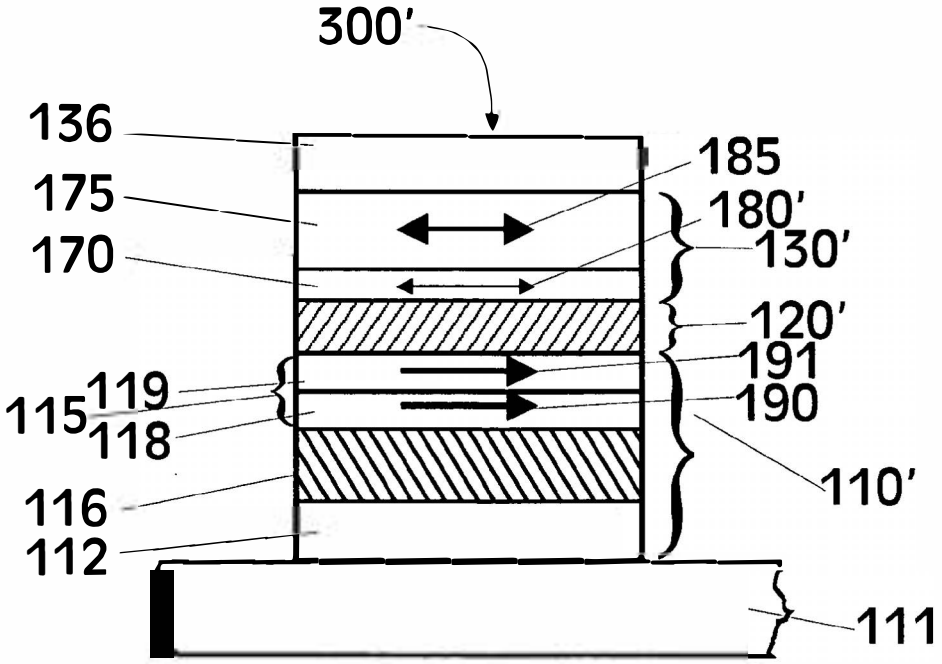
300'
136
175
170
185
180'
130'
120'
191
190
119
115
118
110'
116
112
111

FIG. 3B

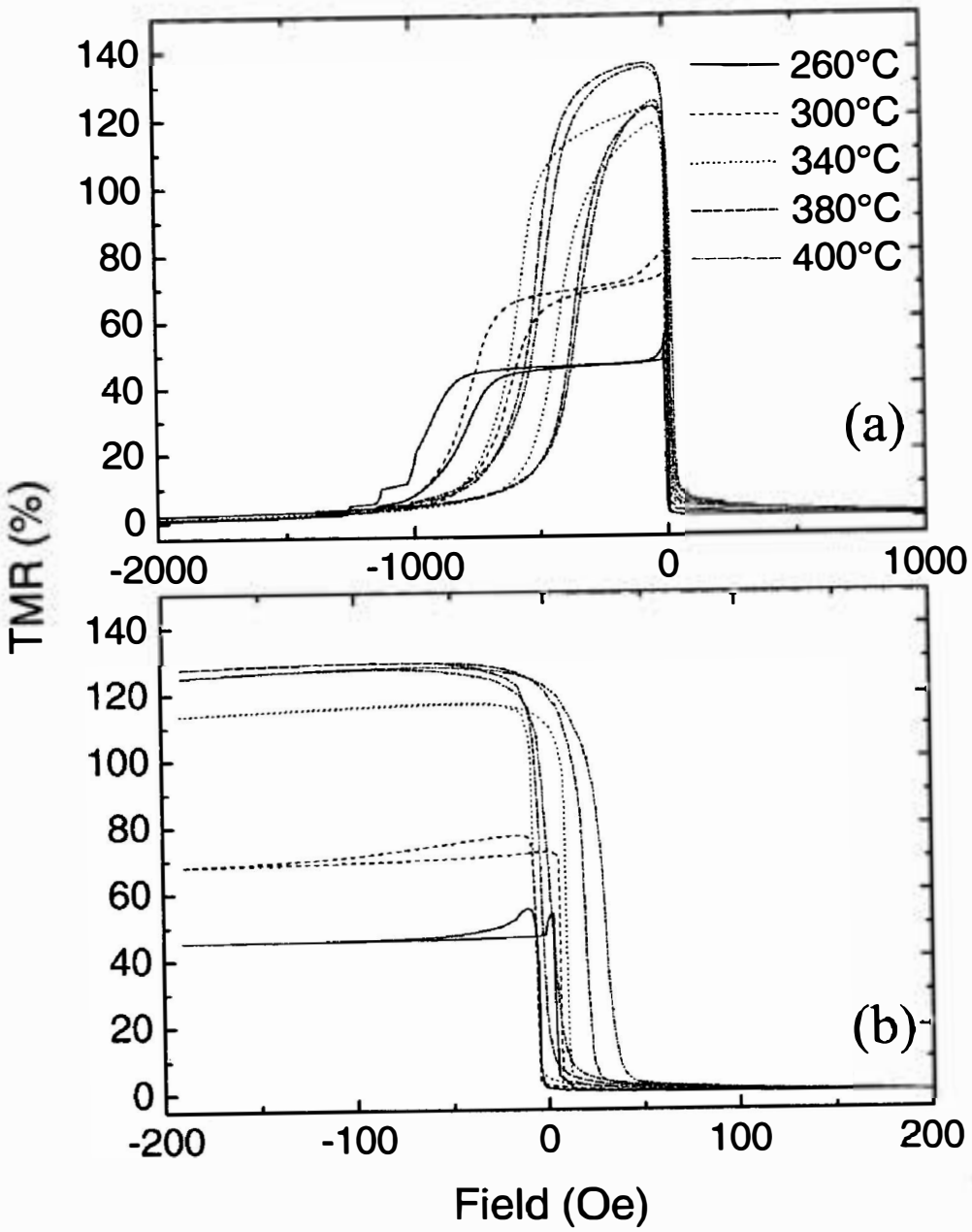
TMR (%)
140
120
100
80
60
40
20
0
-2000
-1000
0
1000
260°C
300°C
340°C
380°C
400°C
(a)
140
120
100
80
60
40
20
0
-200
-100
0
100
200
(b)
Field (Oe)

FIG. 4

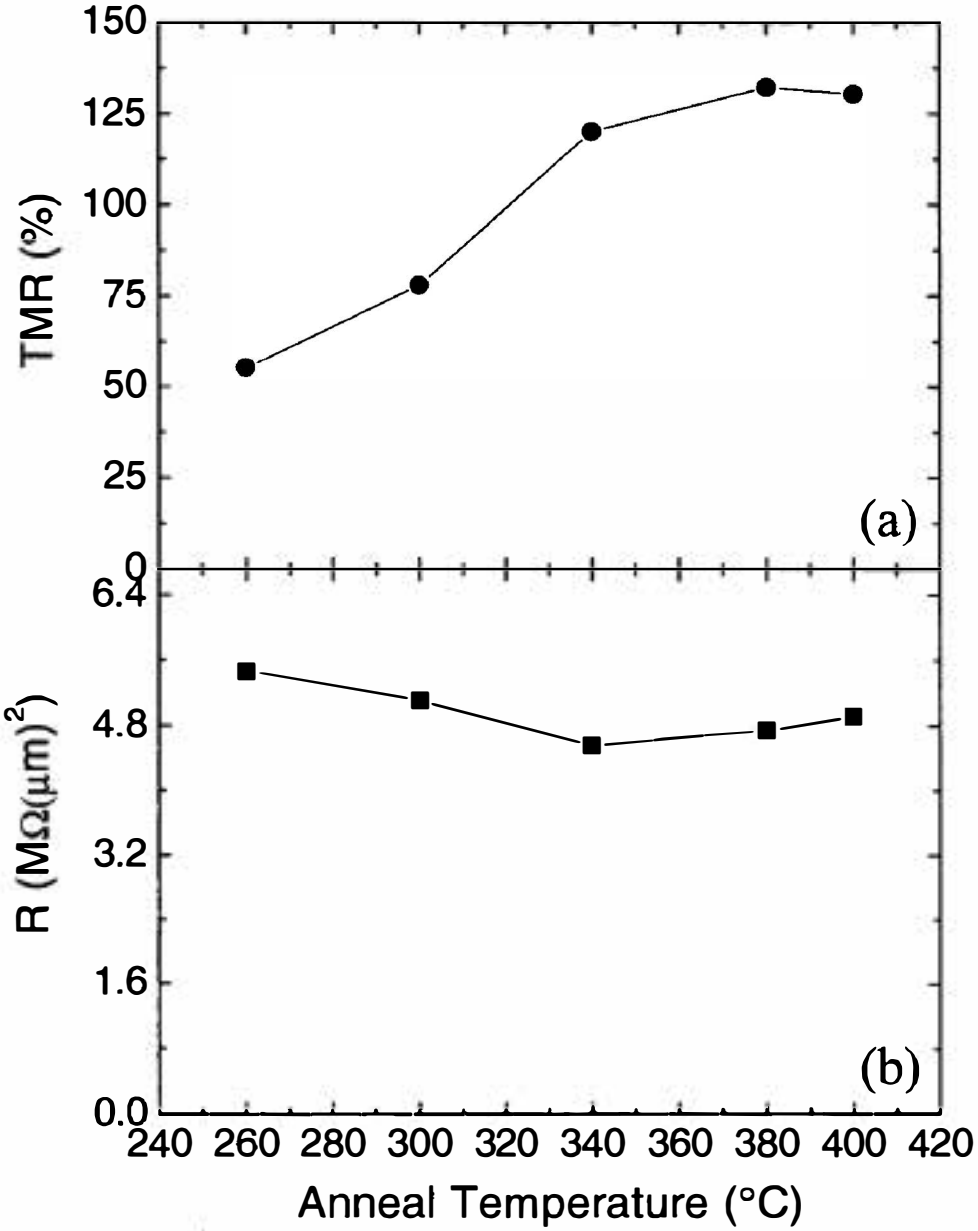
150
125
100
75
50
25
0
TMR (%)
(a)
6.4
4.8
3.2
1.6
0.0
R (MΩ(μm)²)
(b)
240 260 280 300 320 340 360 380 400 420
Anneal Temperature (°C)

FIG. 5

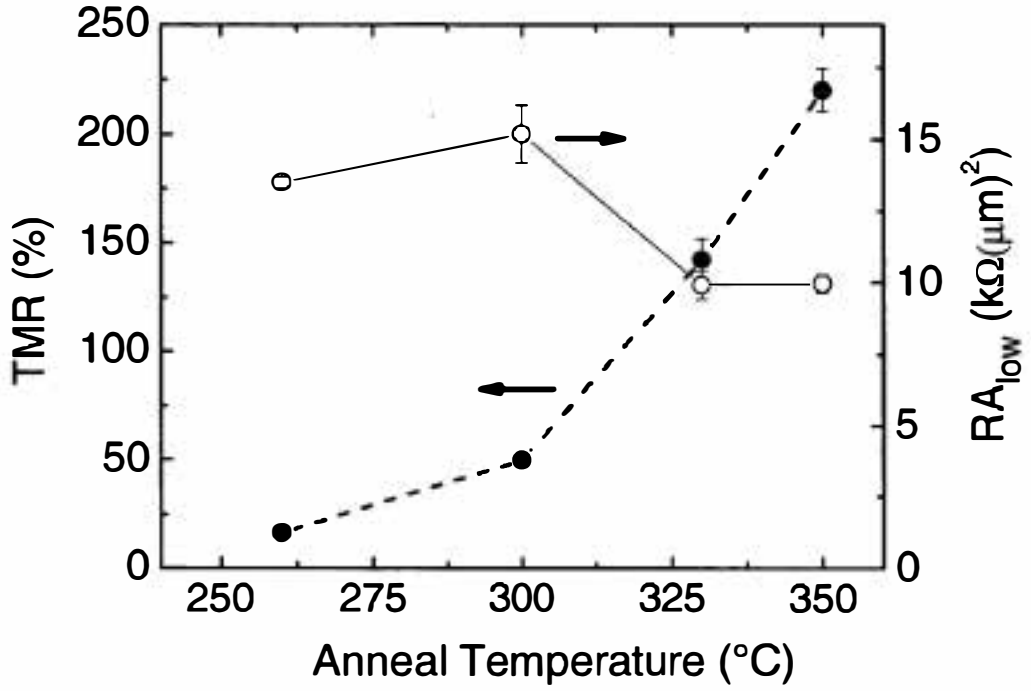
250
200
150
100
50
0
TMR (%)
250
275
300
325
350
Anneal Temperature (°C)
15
10
5
0
RA$_{low}$ (kΩ(μm)^2)

FIG. 6

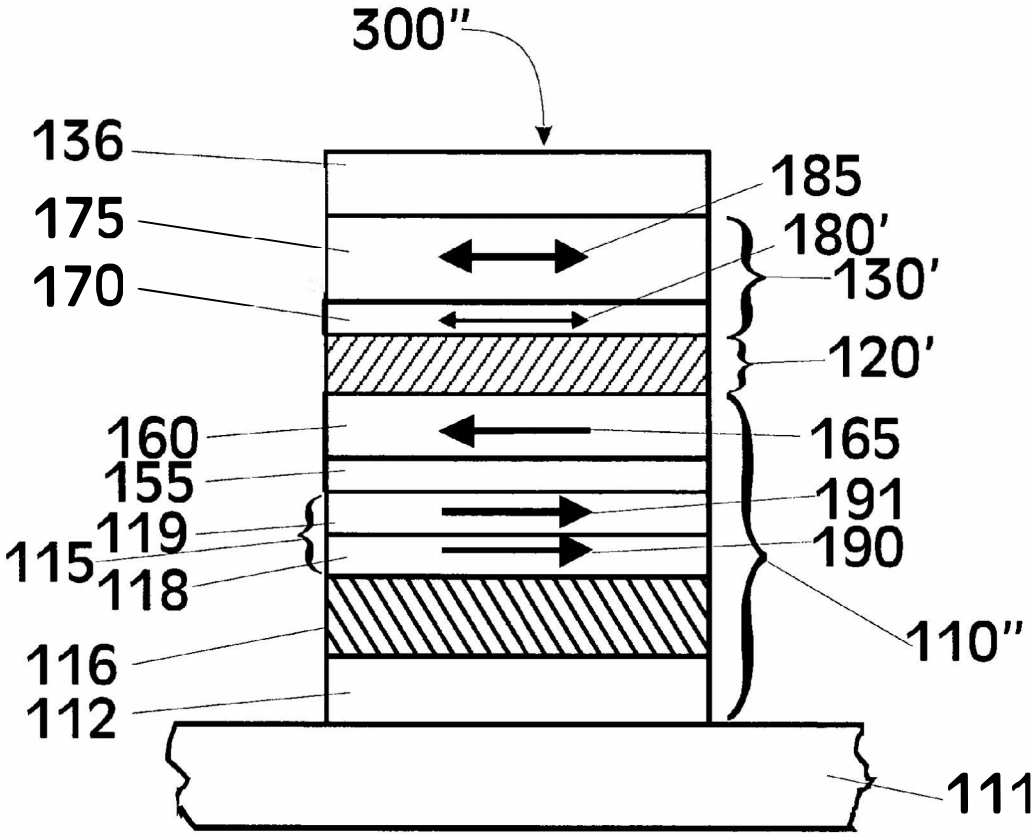
300"
136
175
170
185
180'
130'
120'
160
165
155
191
119
190
115
118
110"
116
112
111

FIG. 7

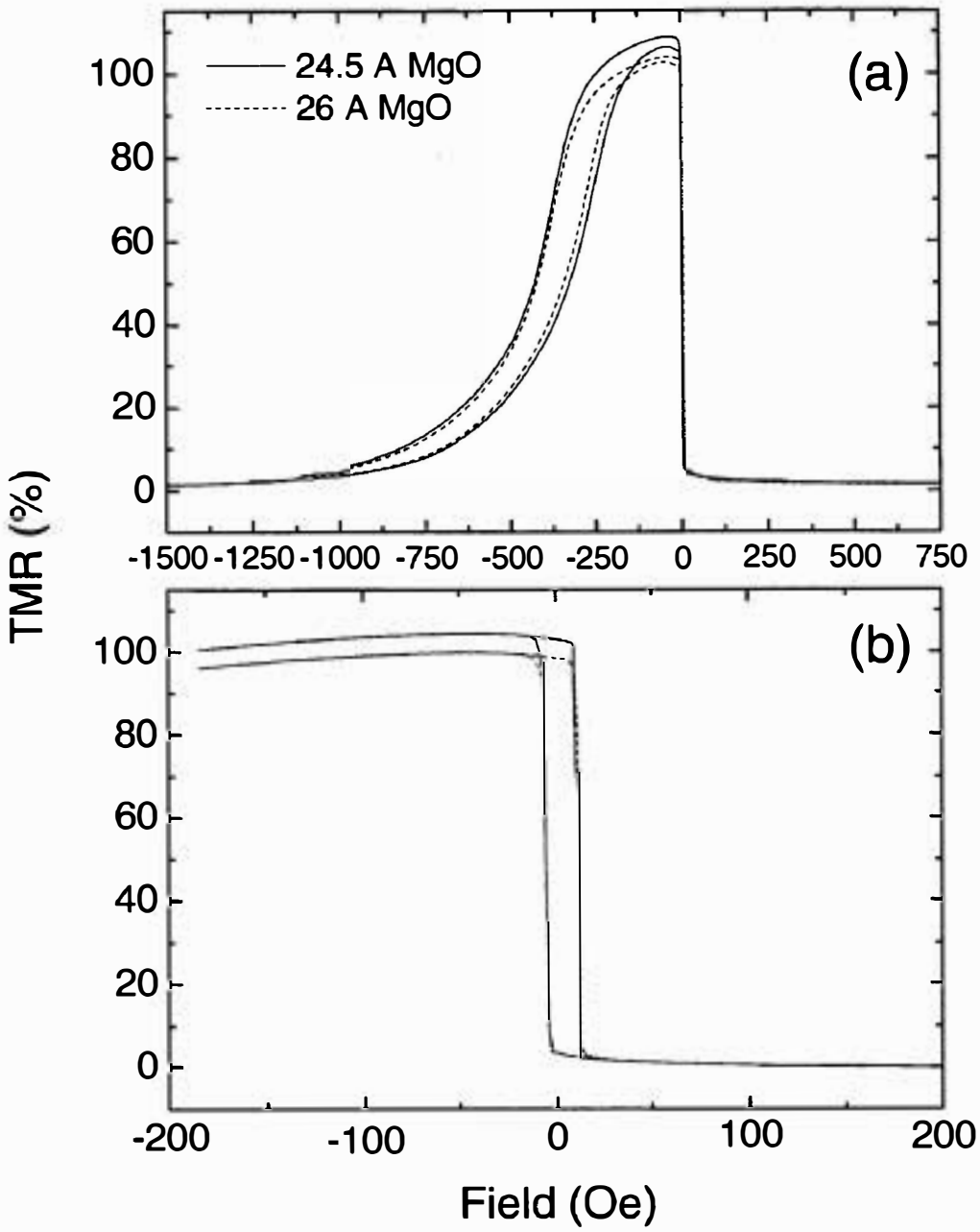
24.5 A MgO
26 A MgO
(a)
(b)
TMR (%)
Field (Oe)
100
80
60
40
20
0
-1500
-1250
-1000
-750
-500
-250
0
250
500
750
-200
-100
0
100
200

FIG. 8

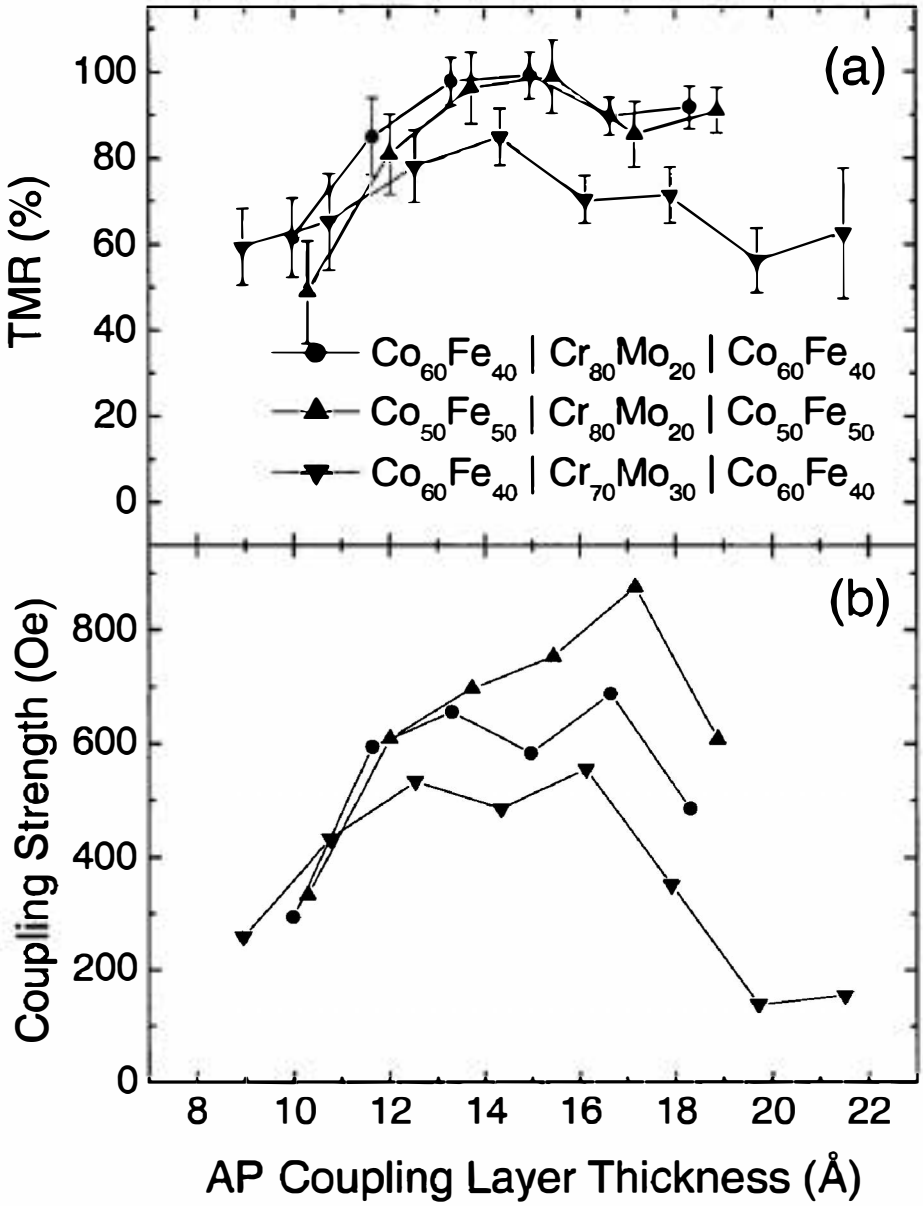
(a)
TMR (%)
100
80
60
40
20
0
$Co_{60}Fe_{40}$ | $Cr_{80}Mo_{20}$ | $Co_{60}Fe_{40}$
$Co_{50}Fe_{50}$ | $Cr_{80}Mo_{20}$ | $Co_{50}Fe_{50}$
$Co_{60}Fe_{40}$ | $Cr_{70}Mo_{30}$ | $Co_{60}Fe_{40}$
(b)
Coupling Strength (Oe)
800
600
400
200
0
8
10
12
14
16
18
20
22
AP Coupling Layer Thickness (Å)

FIG. 9

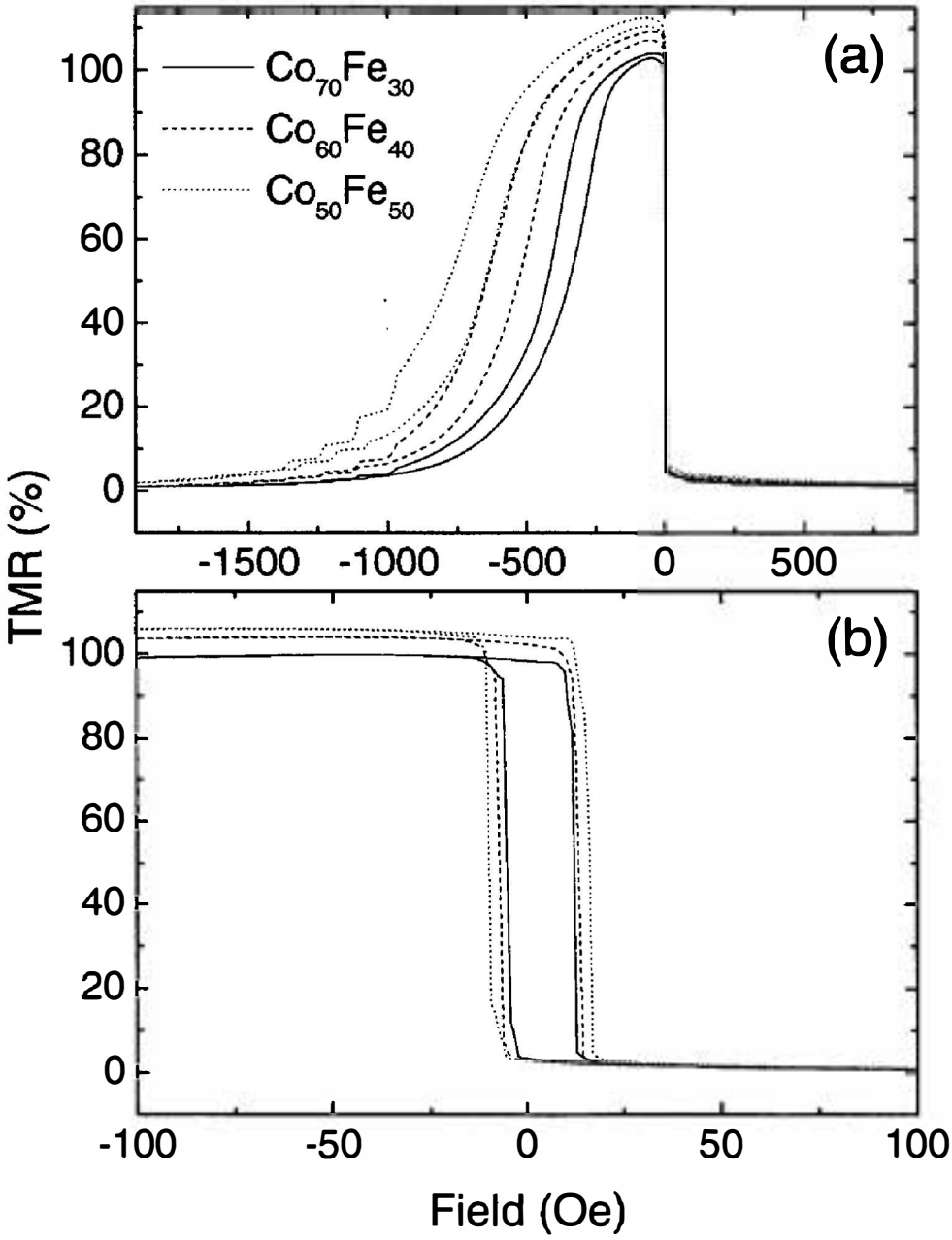
(a)
(b)
$Co_{70}Fe_{30}$
$Co_{60}Fe_{40}$
$Co_{50}Fe_{50}$
TMR (%)
Field (Oe)
100
80
60
40
20
0
-1500
-1000
-500
0
500
-100
-50
0
50
100

FIG. 10

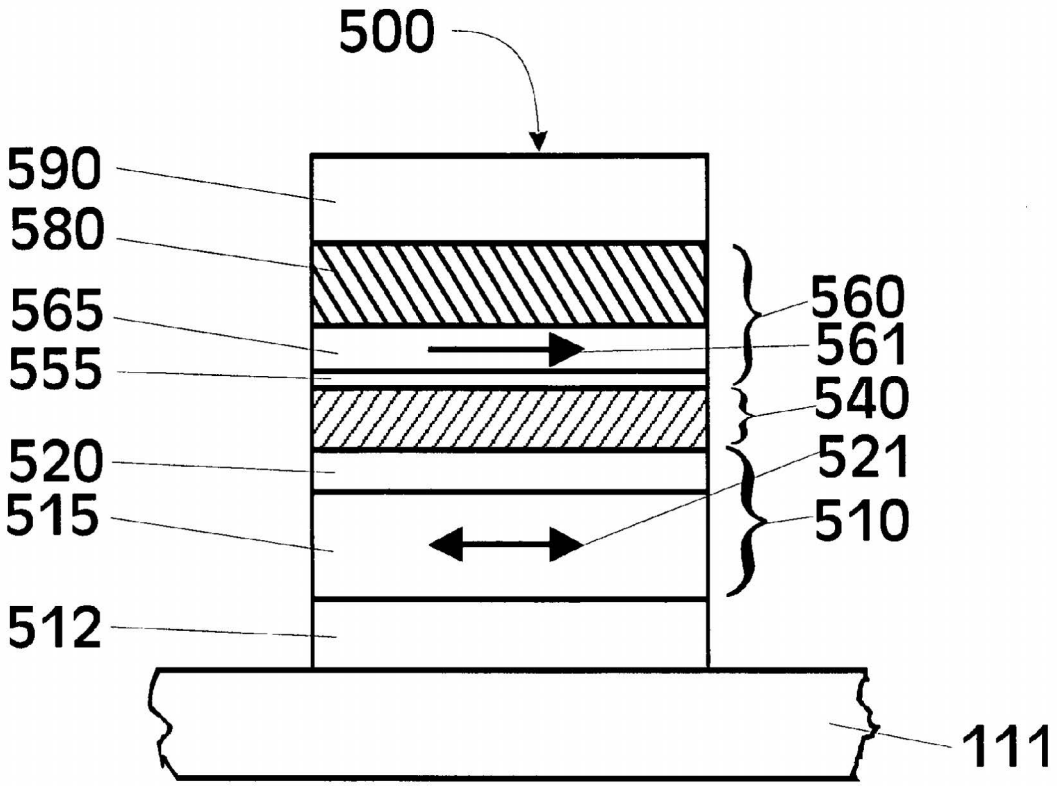

FIG. 11

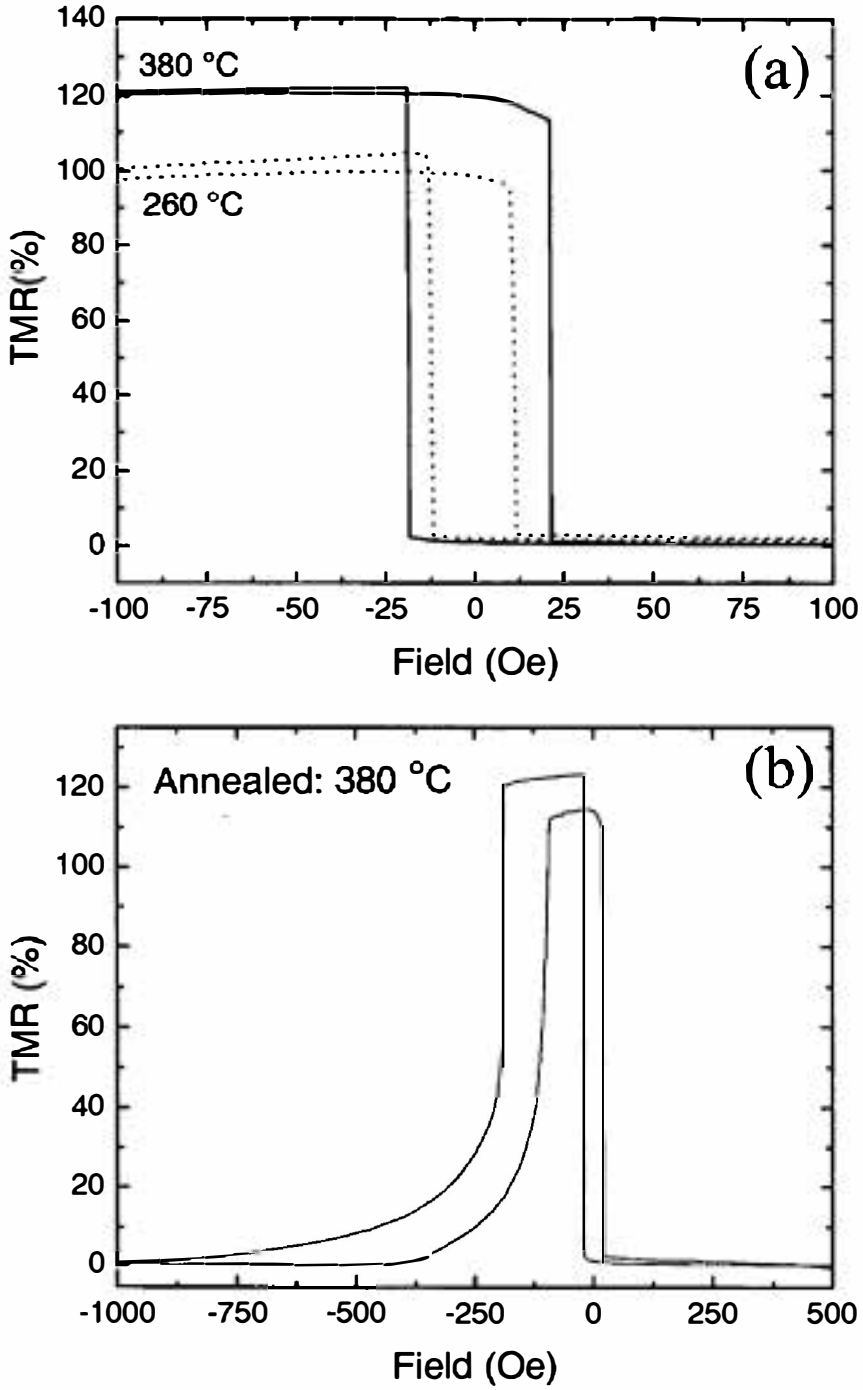

FIG. 12

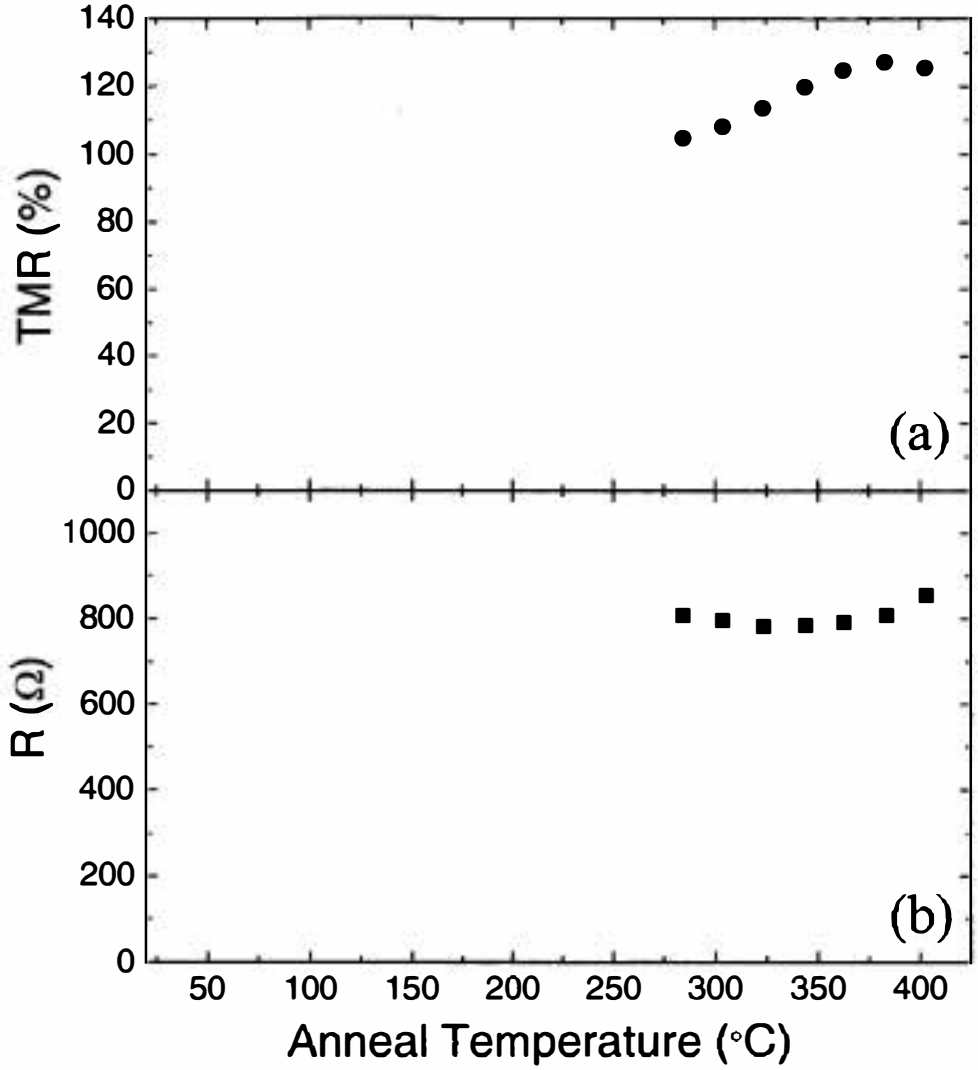
140
120
100
80
60
40
20
0
TMR (%)
(a)
1000
800
600
400
200
0
R (Ω)
(b)
50
100
150
200
250
300
350
400
Anneal Temperature (°C)

FIG. 13

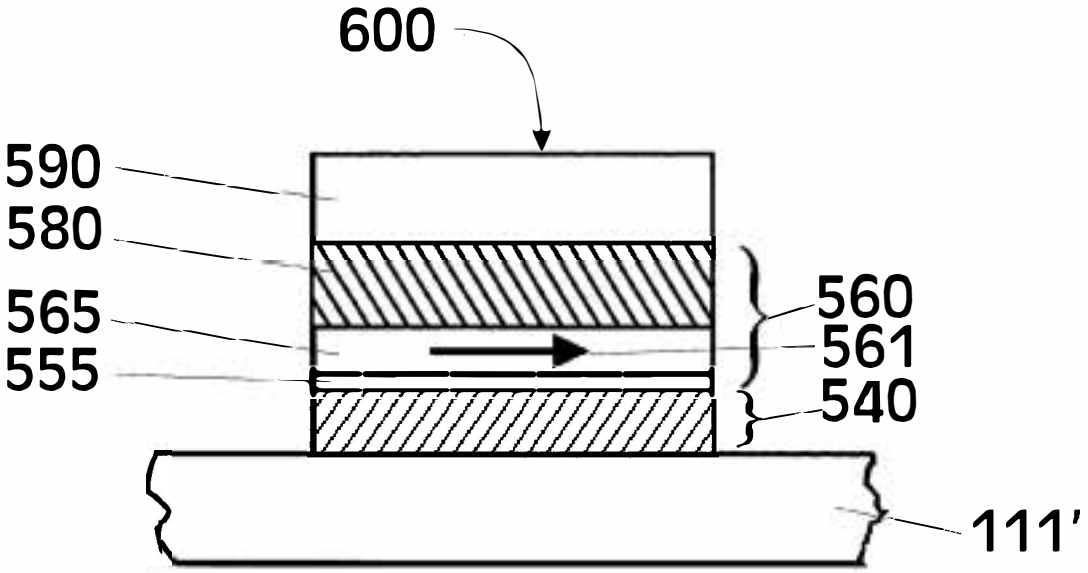

FIG. 14

HIGH PERFORMANCE MAGNETIC TUNNEL BARRIERS WITH AMORPHOUS MATERIALS

[0001] The U.S. Government has a paid-up license in this invention and the right in limited circumstances to require the patent owner to license others on reasonable terms as provided for by the terms of contract MDA972-01-C-0051 awarded by DARPA.

TECHNICAL FIELD

[0002] The invention relates to magnetic tunnel junction (MTJ) magnetoresistive (MR) devices for use as magnetic field sensors such as read heads for reading magnetically recorded data, as memory cells in nonvolatile magnetic random access memory (MRAM) cells, and for magnetic logic and spintronic applications. More particularly, this invention relates to an improved MTJ exhibiting high tunneling magnetoresistance with one or more electrodes formed from amorphous ferromagnetic materials.

BACKGROUND OF THE INVENTION

[0003] The basic component of a magnetic tunnel junction is a sandwich of two thin ferromagnetic and/or ferrimagnetic layers separated by a very thin insulating layer through which electrons can tunnel. The tunneling current is typically higher when the magnetic moments of the ferromagnetic (F) layers are parallel and lower when the magnetic moments of the two ferromagnetic layers are anti-parallel. The change in conductance for these two magnetic states can be described as a magneto-resistance. Here the tunneling magnetoresistance (TMR) of the MTJ is defined as $(R_{AP}-R_P)/R_P$ where R_P and R_{AP} are the resistance of the MTJ for parallel and anti-parallel alignment of the ferromagnetic layers, respectively. MTJ devices have been proposed as memory cells for nonvolatile solid state memory and as external magnetic field sensors, such as TMR read sensors for heads for magnetic recording systems. For a memory cell application, one of the ferromagnetic layers in the MTJ is the reference layer and has its magnetic moment fixed or pinned, so that its magnetic moment is unaffected by the presence of the magnetic fields applied to the device during its operation. The other ferromagnetic layer in the sandwich is the storage layer, whose moment responds to magnetic fields applied during operation of the device. In the quiescent state, in the absence of any applied magnetic field within the memory cell, the storage layer magnetic moment is designed to be either parallel (P) or anti-parallel (AP) to the magnetic moment of the reference ferromagnetic layer. For a TMR field sensor for read head applications, the reference ferromagnetic layer has its magnetic moment fixed or pinned so as to be generally perpendicular to the magnetic moment of the free or sensing ferromagnetic layer in the absence of an external magnetic field. The use of an MTJ device as a memory cell in an MRAM array is described in U.S. Pat. No. 5,640,343. The use of an MTJ device as a MR read head has been described in U.S. Pat. Nos. 5,390,061; 5,650,958; 5,729,410 and 5,764,567.

[0004] **FIG. 1A** illustrates a cross-section of a conventional prior-art MTJ device. The MTJ **100** includes a bottom "fixed" or "reference" ferromagnetic (F) layer **15**, an insulating tunnel barrier layer **24**, and a top "free" or "storage" ferromagnetic layer **34**. The MTJ **100** has bottom and top electrical leads **12** and **36**, respectively, with the bottom lead being formed on a suitable substrate **11**, such as a silicon oxide layer. The ferromagnetic layer **15** is called the fixed (or reference) layer because its magnetic moment is prevented from rotating in the presence of an applied magnetic field in the desired range of interest for the MTJ device, e.g., the magnetic field caused by the write current applied to the memory cell from the read/write circuitry of the MRAM. The magnetic moment of the ferromagnetic layer **15**, whose direction is indicated by the arrow **90** in **FIG. 1A**, can be fixed by forming it from a high coercivity magnetic material or by exchange coupling it to an antiferromagnetic layer **16**. The magnetic moment of the free ferromagnetic layer **34** is not fixed, and is thus free to rotate in the presence of an applied magnetic field in the range of interest. In the absence of an applied magnetic field, the moments of the ferromagnetic layers **15** and **34** are aligned generally parallel (or anti-parallel) in an MTJ memory cell (as indicated by the double-headed arrow **80** in **FIG. 1A**) and generally perpendicular in a MTJ magnetoresistive read head. The relative orientation of the magnetic moments of the ferromagnetic layers **15**, **34** affects the tunneling current and thus the electrical resistance of the MTJ device. The bottom lead **12**, the antiferromagnetic layer **16**, and the fixed ferromagnetic layer **15** together may be regarded as constituting the lower electrode **10**.

[0005] The basic concept of a magnetic tunnel junction was first realized in 1975 (M. Julliére, "*Tunneling between ferromagnetic films*", Phys. Lett. 54A, 225 (1975)), although the TMR was very small and observed only at low temperatures and for very small bias voltages. In 1995 significant TMR effects of about 10% were obtained at room temperature in MTJs with Al_2O_3 tunnel barriers by two different groups (J. S. Moodera et al., "*Large magnetoresistance at room temperature in ferromagnetic thin film tunnel junctions*", Phys. Rev. Lett. 74, 3273 (1995); and T. Miyazaki and N. Tezuka, "*Giant magnetic tunneling effect in Fe/Al_2O_3/Fe junction*", J. Magn. Magn. Mat. 139, L231 (1995)). Subsequently, S. S. P. Parkin et al. ("*Exchange-biased Magnetic Tunnel Junctions and Application to Non-Volatile Magnetic Random Access Memory*", J. Appl. Phys. 85, 5828 (1999)) obtained effects as large as about 48-50% by optimizing the growth of the Al_2O_3 tunnel barrier, by optimizing the interface between the Al_2O_3 tunnel barrier and the ferromagnetic electrodes, and by carefully controlling the magnetic orientation of the ferromagnetic moments using concepts of magnetic engineering, in particular, exchange bias (see U.S. Pat. No. 5,650,958 titled "Magnetic tunnel junctions with controlled magnetic response" to W. J. Gallagher et al.) and an anti-parallel coupled pinned ferromagnetic layer (see U.S. Pat. No. 5,841,692 titled "Magnetic tunnel junction device with antiferromagnetically coupled pinned layer" to W. J. Gallagher et al.).

[0006] The magnetoresistance of MTJs using aluminum oxide tunneling barriers is limited to about 50% at room temperature (S. S. P. Parkin et al., "*Exchange-biased Magnetic Tunnel Junctions and Application to Non-Volatile Magnetic Random Access Memory*", J. Appl. Phys. 85, 5828 (1999); X.-F. Han et al., "*Fabrication of high-magnetoresistance tunnel junctions using $CO_{75}Fe_{25}$ ferromagnetic electrodes*", Appl. Phys. Lett. 77, 283 (2000)), although there have been reports of TMR values of up to about 58% at room temperature (M. Tsunoda et al., "60% *magnetore-*

sistance at room temperature in Co—Fe/Al—O/Co—Fe tunnel junctions oxidized with Kr—O2 plasma", Appl. Phys. Lett. 80, 3135 (2002)).

[0007] For applications of magnetic tunnel junctions for either magnetic recording heads or for non-volatile magnetic memory storage cells, high TMR values are needed for improving the performance of these devices. The speed of operation of the recording head or memory is related to the signal to noise ratio (SNR) provided by the MTJ—higher TMR values will lead to higher SNR values for otherwise the same resistance. Moreover, for memory applications, the larger the TMR, the greater is the variation in resistance of the MTJs from device to device which can be tolerated. Since the resistance of an MTJ depends exponentially on the thickness of the tunneling barrier, small variations in thickness can give rise to large changes in the resistance of the MTJ. Thus high TMR values can be used to mitigate inevitable variations in tunnel barrier thickness from device to device. The resistance of an MTJ device increases inversely with the area of the device. As the density of memory devices increases in the future, the thickness of the tunnel barrier will have to be reduced (for otherwise the same tunnel barrier material) to maintain an optimal resistance of the MTJ memory cell for matching to electronic circuits. Thus a given variation in thickness of the tunnel barrier (introduced by whatever process is used to fabricate the MTJ) will become an increasingly larger proportion of the reduced tunnel barrier thickness and so will likely give rise to larger variations in the resistance of the MTJ device.

[0008] U.S. patent application Ser. No. 10/824,835 to Parkin titled "MgO tunnel barriers and method of formation" (filed Apr. 14, 2004), which is hereby incorporated by reference, discloses a method of forming a tunnel barrier comprised of magnesium oxide (MgO) with which magnetic tunnel junctions can be deposited which exhibit tunneling magnetoresistance values of more than 100% at low bias. The tunnel barrier is formed by first depositing a thin layer of Mg using, for example, magnetron or ion beam sputter deposition followed by a layer of Mg deposited in the presence of oxygen. In addition, Parkin discloses methods of forming highly oriented crystalline MgO tunnel barriers by forming the MgO barrier on a ferromagnetic electrode comprised of a Co—Fe alloy, which is bcc and (100) textured. The CoFe electrode is formed on a (100) oriented antiferromagnetic layer of fcc IrMn which itself is grown highly oriented by forming this layer on suitable underlayers, for example, a combination of a TaN layer followed by a Ta layer.

[0009] Useful MTJ devices for magnetic recording read heads or for MRAM memory cells will be of sub-micron dimensions. This leads to very large self-demagnetizing for devices which are not circular in cross-section and very large magnetostatic coupling fields between ferromagnetic layers in the same device. For example, in the conventional device shown in **FIG. 1A**, there will be a very large interaction between the pinned ferromagnetic layer **15** and the free or storage ferromagnetic layer **34** because of magnetic poles formed at the edges of the device **100**. These coupling fields are so large as to make such devices typically unworkable because the direction of the magnetic moment of the storage layer **34**, indicated by the arrow **80** in **FIG. 1A**, will preferentially be oriented antiparallel to that of the direction of the magnetic moment of the fixed ferromagnetic layer **15**, indicated by the arrow **90** in **FIG. 1A**. One method to solve this problem was first proposed by Parkin and Heim with reference to metallic spin-valve giant magnetoresistance sensors in IBM's U.S. Pat. No. 5,465,185, wherein the reference ferromagnetic layer **15** is replaced by a sandwich of two ferromagnetic layers **18** and **19** antiferromagnetically coupled through a metallic spacer layer **17** as shown by the MTJ **100'** of **FIG. 1B**. The lower electrode is now given by the reference numeral **10'**, and the magnetic orientation of the layers **18** and **19** is given by the arrows **90'** and **95**, respectively. Parkin showed that the spacer layer can be comprised of a wide variety of non-magnetic metals chosen from the groups of the 3d, 4d, and 5d transition metals as well as the noble metals, Cu, Au and Ag such that the layers **18** and **19** are indirectly exchange coupled through the metallic spacer layer **17** (S. S. P. Parkin et al. "*Oscillations in Exchange Coupling and Magnetoresistance in Metallic Superlattice Structures: Co/Ru, Co/Cr and Fe/Cr*", Phys. Rev. Lett. 64, 2304 (1990) and S. S. P. Parkin, "*Systematic Variation of Strength and Oscillation Period of Indirect Magnetic Exchange Coupling through the 3d, 4d and 5d Transition Metals*", Phys. Rev. Lett. 67, 3598 (1991)). For certain thicknesses of the spacer layer **17**, the magnetic moments of the ferromagnetic layers **18** and **19** are antiferromagnetically coupled to one another so that the net magnetic moment of the sandwich can be chosen to be arbitrarily small. Consequently, the demagnetization field from the edges of the layer **18** is reduced by the opposite demagnetizing field arising from the poles at the edges of the layer **19**. The net demagnetizing field can be zero by proper choice of the thicknesses and the magnetic material forming layers **18** and **19**. In particular Parkin (S. S. P. Parkin et al. "*Oscillations in Exchange Coupling and Magnetoresistance in Metallic Superlattice Structures: Co/Ru, Co/Cr and Fe/Cr*", Phys. Rev. Lett. 64, 2304 (1990)) showed that Ru is a highly preferred antiferromagnetic coupling layer because of the large antiferromagnetic (AF) coupling strength exhibited by very thin layers of Ru and because Ru displays large AF coupling for a wide range of ferromagnetic materials. Moreover, structures using Ru antiferromagnetic coupling layers also display high thermal stability. For these reasons the synthetic antiferromagnetic structure formed from the combination of ferromagnetic layers **18** and **19** separated by a thin Ru layer **17** has become the de facto structure of choice for magnetic recording read heads based on giant magnetoresistance as well as for magnetic tunnel junction memory cells based on spin dependent tunneling using amorphous alumina tunnel barriers. The use of synthetic antiferromagnetic reference layers using Ru antiferromagnetic coupling layers for MTJ sensor and memory applications is described in IBM's U.S. Pat. No. 5,841,692 titled "*Magnetic tunnel junction device with antiferromagnetically coupled pinned layer*" to W. J. Gallagher et al.

[0010] However, MTJs with MgO tunnel barriers and synthetic antiferromagnetic reference layers using Ru antiferromagnetic coupling layers do not exhibit the high tunneling magnetoresistance values exhibited by similar MTJs without the synthetic antiferromagnetic reference layer. MTJs without a synthetic antiferromagnetic reference layer suffer from the presence of unwanted coupling fields, as discussed above, since the storage magnetic layer moment has a tendency to be aligned anti-parallel to the reference

layer magnetic moment. Alternative materials and structures are needed for the preparation of MTJ devices with high tunneling magnetoresistance.

[0011] In a cross-point MRAM the MTJ devices are switched by the application of two magnetic fields applied along two orthogonal directions, the easy and hard axes of the MTJ device. Typically the magnetic easy and hard anisotropy axes are defined by the shape of the MTJ element through the self demagnetizing fields. The MRAM array will contain a series of MTJ elements arranged along a series of word and bit lines, typically arranged orthogonal to one another. The magnetic switching fields are realized by passing currents along the word and bit lines. All the cells along a particular word or bit line will be subject to the same word or bit line field. Thus the width of the distribution of switching fields for the selected MTJs (those subject to the vector sum of the bit and word line fields) must be sufficiently narrow that it does not overlap the distribution of switching fields for the half-selected devices. The moment within the MTJ devices lies along a particular direction, the easy axis. The orthogonal direction is the magnetic "hard" axis.

[0012] One of the most challenging problems for the successful development of MTJ memory storage cells is to obtain sufficiently uniform switching fields for a large array of MTJ cells. The switching field will depend on the detailed structure, size and shape of the individual MTJ cells. In particular, the switching characteristics of the storage layer will be influenced by the detailed crystallographic structure of this layer. The storage layer will be formed from a multilayered stack of thin layers comprising both ferromagnetic and non-ferromagnetic materials. Typically the storage layer will be polycrystalline, i.e., comprised of grains of crystalline material having a lateral extent in the range of 100 to 500 A. The ferromagnetic materials will likely exhibit magnetocrystalline anisotropy whereby the magnetization within a grain will prefer to lie along a particular crystallographic direction within the grain. Since the crystalline orientation of the grains which comprise the ferromagnetic layer will vary randomly from grain to grain, the preferred orientation of the magnetic moment will also vary in direction from grain to grain—this direction can be in the plane of the film or could be at an angle out of or into the plane of the film.

[0013] For grains which are strongly exchange coupled, the magnetic moment of the ferromagnetic layer will exhibit a preferred direction determined by averaging over the contributions from the various grains. For a MTJ device comprised of a great number of grains, the contribution of any individual grain is small. However, as the size of the MTJ storage cell is shrunk, the number of crystalline grains will also be reduced, assuming the grain size is unchanged, so that eventually the properties of individual cells may depend on the properties of a small number of grains. This would lead to variations in magnetic switching field from device to device, which can reduce the write margin. One means of mitigating this problem might be to reduce the size of the crystalline grains within the MTJ storage cell storage layer or, alternatively, to eliminate the grains altogether by forming the storage layer from amorphous ferromagnetic (or ferrimagnetic) materials as described in U.S. patent application Ser. No. 10/720,962 to Parkin and Samant titled "Magnetic tunnel junction with improved tunneling magneto-resistance" (filed Nov. 24, 2003), which is hereby incorporated by reference.

[0014] While forming the storage layer within the MTJ memory cell from amorphous magnetic materials would have the advantage of reducing the variation in magnetic switching fields, it is in general desirable for the MTJ to exhibit the largest possible tunneling magnetoresistance, so as to allow for unavoidable cell-to-cell variations in resistance of the MTJ devices within an MRAM array of cells. The methods of forming MTJs with high tunneling magnetoresistance values described in U.S. patent application Ser. No. 10/824,835 to Parkin titled "MgO tunnel barriers and method of formation" (filed Apr. 14, 2004) lead to MTJs which are polycrystalline and highly textured. The high tunneling magnetoresistance requires that the MgO tunnel barrier be simple cubic and preferably (100) textured and surrounded on both sides by ferromagnetic layers which are bcc and preferably (100) textured. The highly textured nature of the MTJ cell means that the easy axis of magnetization will lie preferentially within the plane of the MTJ storage layer. This means that the variation in magnetocrystalline anisotropy field will be typically larger from device to device than would be the case if the storage layer was poorly textured, so that the easy axis of magnetization preferentially would not be within the plane of the storage layer. Therefore, the highly textured structure of MTJs with MgO tunnel barriers which exhibit high tunneling magnetoresistance is likely to lead to large variations in magnetic switching fields from device to device. Since the high tunneling magnetoresistance properties of the MTJs depends on the highly textured crystallographic orientation of the MTJ cell, the use of amorphous ferromagnetic layers, which would likely give rise to smaller variations in magnetic switching fields, would appear to be incompatible with the structural requirements of high TMR MTJ devices.

[0015] What is needed is a method of forming MTJs with high tunneling magnetoresistance with improved magnetic switching characteristics.

SUMMARY OF THE INVENTION

[0016] A preferred embodiment of the invention is a structure that includes at least one tunnel barrier selected from the group of tunnel barriers consisting of MgO and Mg—ZnO, preferably a tunnel barrier that is oriented in the (100) direction. The structure further includes an amorphous magnetic layer of Co and at least one additional element selected to make the layer amorphous, in which the amorphous layer is in proximity with the tunnel barrier, thereby permitting spin-polarized current to pass between the tunnel barrier and the magnetic layer. For example, the amorphous layer may include an alloy of Co and Fe. The additional element that makes the layer amorphous may advantageously comprise at least 10 atomic % of the amorphous layer; this element may be B, Zr, and/or Hf, for example. The amorphous layer may advantageously have a thickness in the range of 15 to 200 angstroms. The structure may further include a crystalline layer sandwiched between the amorphous layer and the tunnel barrier. The crystalline layer may include an alloy of Co and Fe and may be in direct contact with both the amorphous layer and the tunnel barrier. The crystalline layer preferably has a thickness selected to

be small enough that the crystalline layer does not significantly adversely impact the switching characteristics of the structure.

[0017] The structure may further include an additional magnetic layer (preferably bcc) selected from the group of materials consisting of ferromagnetic materials and ferrimagnetic materials, in which the additional magnetic layer is in proximity with the tunnel barrier, so that spin polarized current may be passed between the additional magnetic layer, the amorphous layer, and the tunnel barrier, with these elements forming a magnetic tunnel junction. The tunnel junction may advantageously have a tunneling magnetoresistance (TMR) at room temperature of greater than 50%, 100%, 160%, or even 200%. Alternatively, the structure may further comprise an additional structure that includes a first body centered cubic (bcc) magnetic layer, a second bcc magnetic layer (in which the first and second magnetic layers include material selected from the group consisting of ferromagnetic materials and ferrimagnetic materials), and at least one spacer layer of bcc material between the magnetic layers (in which the spacer layer exchange couples the first and second bcc magnetic layers), with the additional structure, the tunnel barrier, and the amorphous layer forming a magnetic tunnel junction. In yet another alternative embodiment, the structure may further include a semiconductor layer in proximity with the tunnel barrier, in which the semiconductor layer, the amorphous layer, and the tunnel barrier form a tunnel spin injector device.

[0018] Another preferred embodiment of the invention is a structure that includes at least one MgO and/or Mg—ZnO tunnel barrier. The structure further includes an amorphous magnetic layer in proximity with the tunnel barrier that includes Co and at least one additional element selected to make the layer amorphous, as well as a crystalline layer between the amorphous layer and the tunnel barrier. The structure also includes an additional magnetic layer (preferably bcc) selected from the group of materials consisting of ferromagnetic materials and ferrimagnetic materials, in which tunnel barrier, the amorphous layer, the crystalline layer, and the additional magnetic layer are configured to form a magnetic tunnel junction having a tunneling magnetoresistance (TMR) of at least 50%. In a more preferred embodiment, the tunnel barrier includes MgO, the structure has a TMR of greater than 100% at room temperature, the amorphous layer and the crystalline layer each include an alloy of Co and Fe, the additional magnetic layer has a body-centered cubic (bcc) structure, and the tunnel barrier has a simple cubic structure and is oriented in the (100) direction. The additional magnetic layer is preferably oriented in the (100) direction. Also, the additional magnetic layer may include a first body centered cubic (bcc) magnetic layer, a second bcc magnetic layer (in which the first and second magnetic layers include material selected from the group consisting of ferromagnetic materials and ferrimagnetic materials), and at least one spacer layer of bcc material between the magnetic layers, in which the spacer layer exchange couples the first and second bcc magnetic layers. The spacer layer may advantageously include Cr and Mo.

[0019] A preferred implementation of the invention is a method that includes forming a tunnel barrier selected from the group of tunnel barriers consisting of MgO and Mg—ZnO. The method also includes forming an amorphous ferromagnetic layer by depositing Co and at least one other element on an underlayer, in which the amorphous layer and the tunnel barrier are formed in proximity to one another to permit spin-polarized current to be passed between the tunnel barrier and the amorphous layer. The underlayer may include the tunnel barrier, e.g., the amorphous ferromagnetic layer may be formed directly on the tunnel barrier. Alternatively, the tunnel barrier may be formed on an underlayer that includes the amorphous layer, e.g., the tunnel barrier may be formed directly on the amorphous layer. The additional element may be B, Zr, and/or Hf, and the amorphous layer may include an alloy of Co and Fe. In a preferred implementation, the amorphous ferromagnetic layer includes a thin crystalline layer that is in contact with the tunnel barrier, and the tunnel barrier is (100) oriented.

[0020] The method may also include depositing an additional magnetic layer (e.g., bcc oriented) in proximity with the tunnel barrier to form a magnetic tunnel junction. The tunnel junction may be advantageously annealed to improve its TMR, e.g., at temperature selected to yield a room temperature TMR of greater than 100%, 160%, or even 200%. The junction may be annealed at a temperature greater than 300° C. or even greater than 340° C. Also, the junction may be annealed at a temperature in the range of 300° C. to 400° C.

[0021] In a preferred implementation of the method, the tunnel barrier includes MgO, and the MgO tunnel barrier is formed by depositing Mg onto a surface of an underlayer to form a Mg layer thereon (in which the surface is selected to be substantially free of oxide) and directing additional Mg, in the presence of oxygen, towards the Mg layer to form a MgO tunnel barrier in contact with the underlayer, with the oxygen reacting with the additional Mg and the Mg layer.

[0022] In another preferred implementation of the method, the tunnel barrier includes Mg—ZnO, and the Mg—ZnO tunnel barrier is formed by depositing a metal layer onto a surface of an underlayer (in which the surface is selected to be substantially free of oxide) and directing additional metal towards the metal layer, in the presence of oxygen, to form a magnesium-zinc oxide tunnel barrier in contact with the underlayer, with the oxygen reacting with the additional metal and the metal layer. At least one of the metal layer and the additional metal includes Zn, and at least one of the metal layer and the additional metal includes Mg.

[0023] The MgO and Mg—ZnO tunnel barriers of the magnetic tunnel junction devices disclosed herein are preferably prepared according to methods in which the lower ferromagnetic (or ferrimagnetic) electrode is not oxidized, so as to give much higher tunnel magnetoresistance values than in the prior art. Similarly, much higher spin polarization values of tunneling current are obtained in tunnel junction devices with one or more ferromagnetic (or ferrimagnetic) electrodes. The MgO or Mg—ZnO tunnel barrier so formed does not have a significant number of defects that would otherwise lead to hopping conductivity through the tunnel barrier. In preferred methods, highly oriented (100) MgO or Mg—ZnO barriers are formed without using single crystalline substrates or high deposition temperatures, thereby facilitating the manufacture of devices using standard deposition techniques on polycrystalline or amorphous films. Post anneal treatments are preferred to improve the tunneling magnetoresistance, which for the MgO structures disclosed herein can exceed 50, 100, 160 or even 200% at room

temperature, and which for the Mg—ZnO structures disclosed herein can exceed 50% at room temperature.

[0024] For several aspects and embodiments of the invention disclosed herein, a MgO or Mg—ZnO tunnel barrier is sandwiched between an underlayer and an overlayer, either one or both of which may include one or more layers of a ferromagnetic material, a ferrimagnetic material, and/or a semiconductor. While the MgO (or Mg—ZnO) tunnel barrier is preferably in direct contact with the ferromagnetic material, ferrimagnetic material and/or semiconductor, each of the underlayer and overlayer may optionally include one or more spacer layers which are adjacent to the tunnel barrier but which do not significantly affect the tunneling properties of the MgO (or Mg—ZnO) layer, e.g., by not significantly diminishing the spin polarization of electrons tunneling through the tunnel barrier. (It should be understood that the terms underlayer and overlayer do not necessarily imply any particular orientation with respect to gravity.)

[0025] Performance of the MgO (or Mg—ZnO) tunnel barriers disclosed herein may be improved through annealing, wherein performance refers to various attributes of the tunnel barrier or associated device. For example, annealing a magnetic tunnel junction improves, in particular, its magneto-tunneling resistance; annealing a tunnel barrier improves, in particular, its spin polarization. In particular by annealing these tunnel barriers, tunneling magneto-resistance of more than 100% can readily be achieved using methods of thin film deposition and substrate materials compatible with conventional manufacturing technologies. Annealing temperatures may be in the range from 200° C. to 400° C.; however, the best tunnel barrier performance was obtained for annealing temperatures in the range from 300° C. to 400° C. The same anneal that improves the tunneling magnetoresistance may also be used to set the direction of an optional exchange bias field provided by an antiferromagnetic exchange bias layer.

[0026] The preferred embodiments and implementations herein are directed to structures in which the magnetic material has a body-centered cubic (bcc) lattice, since this lattice type leads to the best performance of the MgO or Mg—ZnO tunnel barrier (e.g., the highest TMR for a tunnel junction). It should be noted, however, that in thin films, because of strain induced by overlayers and/or underlayers, the in-plane and out-of-plane lattice constants may be slightly different, and the lattice may be slightly distorted from the pure bcc case, e.g., as a result of a tetragonal distortion. As used herein, the term "body centered cubic" (bcc) should be construed broadly enough to encompass such deviations from the pure bcc case.

[0027] The preferred embodiments and implementations of the invention are directed to magnetic layers and MgO or Mg—ZnO tunnel barrier layers which are substantially (100) oriented or textured. Certain magnetic layers and tunnel barrier layers are polycrystalline and are comprised of grains or crystallites which range in lateral extent from approximately one hundred to several hundred angstroms (e.g., 500 angstroms). Thus, these layers and the overall film structure are what is commonly referred to as textured. Texturing implies that there is a predominant crystallographic orientation of individual layers and/or the overall film structure, but that the grains are not perfectly aligned along one particular direction. Individual grains may not be precisely oriented with their (100) direction along the normal to the film layer, but the (100) direction within individual grains may be oriented away from the normal to the plane of the film by an angle that can vary from a small fraction of one degree to several degrees or even tens of degrees for poorly textured films. The angular range of these (100) directions can be used to quantify the degree of (100) crystalline texture of the film structure and can be measured using various structural characterization techniques, including cross-section transmission electron microscopy and various x-ray diffraction techniques. There may also be present grains which are oriented in a completely different direction, but the proportion of these grains is small for the method of formation of the magnetic tunnel junction structures described herein. Note that the crystalline grains are randomly oriented with respect to a direction within the plane of the substrate on which the film structures are grown. It is the orientation or texturing of the film which is important with regard to the preferred embodiments herein. Whereas the maximum TMR is obtained for film structures which are highly textured, the TMR will be increased to the extent that the film structure is textured. It is preferred that the angular range of a (100) direction within the grains be within + or −20 degrees of the film normal, or more preferably within + or −10 degrees, and even more preferably within + or −5 degrees. As used herein, the term "(100) oriented" should be understood to include the aforementioned deviations from the ideal case, in which all the grains are precisely oriented with their (100) direction along the normal to the film layer.

[0028] Notwithstanding the polycrystalline nature of the film structures described herein, which are in any case preferable for ease of manufacturing, the method of forming the MgO (or Mg—ZnO) tunnel barrier described herein can also be applied to the growth of epitaxial single crystalline film structures, wherein the structures are prepared on a face of a single crystalline substrate chosen so that the crystalline spacing and crystalline cell is compatible with the growth of a bcc ferromagnetic metal layer oriented in the (100) growth direction and the subsequent growth of a MgO (or Mg—ZnO) tunnel barrier according one of the preferred embodiments described herein.

[0029] For a fuller understanding of the nature and advantages of the present invention, reference should be made to the following detailed description taken together with the accompanying figures.

BRIEF DESCRIPTION OF THE DRAWINGS

[0030] **FIG. 1**, which includes **FIGS. 1A and 1B**, is a schematic of a magnetic tunnel junction formed in accordance with the prior art. **FIG. 1A** shows a magnetic tunnel junction with a reference and a storage ferromagnetic layer, and **FIG. 1B** shows a magnetic tunnel junction device with a reference layer (formed from a synthetic antiferromagnet) and a storage ferromagnetic layer.

[0031] **FIG. 2A** illustrates the sequence of layers that are deposited to form a magnetic tunnel junction having high tunneling magnetoresistance (TMR).

[0032] **FIG. 2B** is a cross sectional view of the magnetic tunnel junction that is formed according to the methodology of **FIG. 2A**.

[0033] **FIG. 2C** is a schematic cross-section of the arrangement of the atoms in one of the layers of the textured magnetic tunnel junction formed according to the methodology of **FIG. 2A**.

[0034] **FIG. 2D** is a schematic planar view of the magnetic tunnel junction formed according to the methodology of **FIG. 2A** showing the crystallographic orientation of crystalline grains within the polycrystalline structure.

[0035] **FIGS. 3A and 3B** are cross-sectional views of magnetic tunnel junctions of the present invention.

[0036] **FIG. 4**, which includes **FIGS. 4A and 4B**, shows the dependence of tunneling magnetoresistance on the applied magnetic field in the plane of a magnetic tunnel junction device for the structure shown in **FIG. 3A** annealed at various temperatures indicated in the Figure. **FIG. 4A** shows a sequence of major loops and **FIG. 4B** shows a sequence of minor loops at room temperature after an anneal treatment at each of the indicated temperatures.

[0037] **FIG. 5**, which includes **FIGS. 5A and 5B**, shows the dependence of the tunneling magnetoresistance (in **FIG. 5A**) and the resistance-area product (in **FIG. 5B**) as a function of anneal temperature for an MTJ of the present invention.

[0038] **FIG. 6** shows the dependence of tunneling magnetoresistance (left hand axis) and the resistance-area product (right hand axis) as a function of anneal temperature for an MTJ of the present invention.

[0039] **FIG. 7** shows a cross-sectional view of a magnetic tunnel junction of the present invention.

[0040] **FIG. 8**, which includes **FIGS. 8A and 8B**, shows the dependence of tunneling magnetoresistance on the applied magnetic field in the plane of two magnetic tunnel junction devices for the structure shown in **FIG. 7**. **FIG. 8A** shows a major loop and **FIG. 8B** shows a minor loop for each junction at room temperature.

[0041] **FIG. 9**, which includes **FIGS. 9A and 9B**, shows the dependence of the tunneling magnetoresistance (in **FIG. 9A**) and the antiferromagnetic coupling field (in **FIG. 9B**) for various MTJs of the present invention with two different Co—Fe alloy layer compositions, as a function of thickness of the Cr—Mo antiferromagnetic coupling layer for two different Cr—Mo compositions.

[0042] **FIG. 10**, which includes **FIGS. 10A and 10B**, compares tunneling magnetoresistance versus field loops for MTJs of the present invention with ferromagnetic layers formed from three different CoFe compositions and antiferromagnetic coupling layers formed from $Cr_{80}Mo_{20}$. **FIG. 10A** shows major loops, and **FIG. 10B** shows minor loops.

[0043] **FIG. 11** shows a cross-sectional view of a magnetic tunnel junction of the present invention.

[0044] **FIG. 12**, which includes **FIGS. 12A and 12B**, shows the dependence of the tunneling magnetoresistance as a function of magnetic field in the plane of the junction for an MTJ of the present invention at room temperature. Minor loops for the same junction annealed at 260° C. and 380° C. are shown in **FIG. 12A**. A major loop is shown in **FIG. 12B** for the junction after annealing at 380° C.

[0045] **FIG. 13**, which includes **FIGS. 13A and 13B**, shows the dependence of the tunneling magnetoresistance (in **FIG. 13A**) and the resistance (in **FIG. 13B**) as a function of anneal temperature for an MTJ of the present invention.

[0046] **FIG. 14** shows a cross-sectional view of a tunnel spin injector of the present invention.

DESCRIPTION OF THE PREFERRED EMBODIMENTS

[0047] The tunneling current in an MTJ is spin polarized, which means that the electrical current passing from one of the ferromagnetic layers is predominantly composed of electrons of one spin type (spin up or spin down, depending on the orientation of the magnetization of the ferromagnetic layer). The tunneling spin polarization P of the current can be inferred from a variety of different measurements. The measurement most relevant to magnetic tunneling is to measure the conductance as a function of bias voltage for junctions formed from a sandwich of the ferromagnetic material of interest and a superconducting counter electrode (R. Meservey and P. M. Tedrow, Phys. Rep. 238, 173 (1994)). These studies show that the spin polarization of the tunnel current measured in this way can be simply related to the TMR close to zero bias voltage as first proposed by Julliére (M. Julliére, Phys. Lett. 54A, 225 (1975)). In such a model P is defined as $(n_\uparrow - n_\downarrow)/(n_\uparrow + n_\downarrow)$, where $n_\uparrow$ and $n_\downarrow$ are the density of spin up and spin down states at the ferromagnet/insulator interface. By assuming that the tunnel current is comprised of two independent majority and minority spin currents and that these currents are related to the respective density of states of the majority and minority carriers in the opposing ferromagnetic electrodes, the TMR can be formulated by the relation $TMR=(R_{AP}-R_P)/R_P=2P_1P_2/(1-P_1P_2)$, where R_{AP} and R_P are the resistance of the MTJ for antiparallel and parallel orientation of the ferromagnetic electrodes, respectively, and P_1 and P_2 are the spin polarization values of the two ferromagnetic electrodes. Experimentally, it is clear that the magnitude of the TMR is extremely sensitive to the nature of the interface between the tunneling barrier and the ferromagnetic electrode. By changing the properties of the interface layer, for example, by inserting very thin layers of non-magnetic metals between the ferromagnet and the insulator layers, the TMR can be dramatically altered. Based on such observations, most experimental data on magnetic tunneling have usually been interpreted by assuming that P is largely determined by the electronic structure of the ferromagnetic interface layer essentially independent of the tunnel barrier electronic structure. However, it is now recognized that P can be strongly influenced by the probability of tunneling of electrons which depends not only on their spin but also on the tunneling matrix element. The tunneling matrix element is determined by the detailed electronic structure of the ferromagnetic, the tunnel barrier and that of the interface between the ferromagnetic electrode and the tunnel barrier. For the same ferromagnetic electrode, the polarization of the tunneling current P varies depending on the material and structure of the tunnel barrier.

[0048] The possibility of high tunneling magnetoresistance in MTJs formed from Fe/MgO/Fe sandwiches where the tunnel barrier is formed from crystalline (100) oriented MgO layers was theorized by W. H. Butler, X.-G. Zhang, T. C. Schulthess et al., Phys. Rev. B 63, 054416 (2001). The high TMR results from the very slow decay through the

tunnel barrier of majority electrons of a particular symmetry for the (100) orientation of Fe/MgO. This also means that the polarization of the tunneling electrons should also be very high. However, extensive experimental work by many groups over a period of several years showed no evidence for improved tunneling magnetoresistance values using crystalline (100) MgO tunnel barriers as compared to amorphous alumina tunnel barriers. It was speculated that during the formation of the MgO tunnel barrier, the surface of the lower Fe electrode became oxidized perhaps resulting in much lower TMR than theorized. In U.S. patent application Ser. No. 10/824,835 to Parkin titled "MgO tunnel barriers and method of formation" (filed Apr. 14, 2004), supra, a method for forming MgO tunnel barriers is described which gives rise to MTJs which exhibit extraordinarily high values of tunneling magnetoresistance. To prevent the oxidation of a lower electrode formed from Fe, a method of forming the MgO barrier was developed in which a thin layer of metallic Mg was first deposited on top of the Fe layer and then a layer of MgO was deposited on top of this Mg layer through the reactive sputtering of Mg in an Ar—O_2 plasma. Using this method of preparing the MgO barrier, very high tunneling magnetoresistance values were obtained, much higher than any previously reported values for any MTJ at room temperature.

[0049] **FIG. 2A** illustrates this process of forming a MTJ **200**, in which a tunnel barrier **120** is formed by first depositing a thin Mg layer **122** followed by deposition by reactive sputtering of an MgO layer **124**. As shown in **FIG. 2B**, it is more appropriate to view the MgO tunnel barrier as a single layer **120'**, since the layer **122** is oxidized to form MgO, with the layers **122** and **124** becoming largely indistinguishable as a result. For example, the layers **122** and **124** are not distinguishable in a cross-sectioned slice of the device examined in a transmission electron microscope. The thickness of the resulting MgO layer **120'** is preferably in the range of 3-50 angstroms, more preferably 3-30 angstroms, still more preferably 3-20 angstroms, and most preferably 4-15 angstroms. **FIG. 2A** shows a device that includes a substrate **111**, a bottom electrical lead **112**, an antiferromagnetic layer **116**, a fixed ferromagnetic (or ferrimagnetic) layer **118**, a "free" ferromagnetic (or ferrimagnetic) layer **134**, and a top electrical lead **136**, all of which are similar to their **FIG. 1B** counterparts **11**, **12**, **16**, **18**, **34**, and **36**, respectively; these layers, as well as other layers and components referred to herein, may be constructed using techniques known to those skilled in the art. The arrows **180** and **190** illustrate possible orientations of the magnetic moments of the free ferromagnetic layer **134** and the fixed ferromagnetic layer **118**, respectively. As shown in **FIGS. 2A and 2B**, the fixed ferromagnetic layer may actually be a bilayer **115** of two different ferromagnetic layers **118** and **119**, each having a magnetic moment oriented as indicated by the arrows **190** and **191**, respectively. The bilayer **115**, the antiferromagnetic layer **116**, and the bottom lead **112** of **FIGS. 2A and 2B** constitute a lower electrode **110**.

[0050] MTJ structures formed according to the method described in U.S. patent application Ser. No. 10/824,835 to Parkin titled "MgO tunnel barriers and method of formation" (filed Apr. 14, 2004), supra, exhibit very high tunneling magnetoresistance values of more than 160% at room temperature. However, the high tunneling magnetoresistance is derived, not only from using a method of forming the MgO tunnel barrier which does not oxidize the lower ferromagnetic electrode, but also from forming a crystalline structure in which the ferromagnetic electrodes directly above and below the (100) textured MgO tunnel barrier have a bcc crystalline structure and are also textured in the (100) orientation. The layer **115** is preferably formed from a bcc alloy formed from one or more of Co and Fe. For example, layer **118** may be formed from Fe or $CO_{84}Fe_{16}$ and layer **119** may be formed from $CO_{70}Fe_{30}$. The crystallographic texture of these layers can be controlled by suitable choice of the underlayers. For example layer **112** may be formed from a bi-layer of TaN and Ta or from a layer of Ta alone. Layer **116** may be formed from an fcc antiferromagnetic alloy of Ir and Mn where the composition of Ir is less than ~30 atomic percent. The IrMn layer grows highly oriented in the (100) orientation when deposited on the layer **112** formed from Ta or TaN/Ta. The substrate **111** may be comprised of an amorphous material such as SiO_2. Using this combination of underlayers, the layer **115**, comprised of one or more bcc Co—Fe alloys, is textured in the (100) orientation and the MTJ **200** displays high TMR.

[0051] A method of forming $Mg_{1-x}Zn_xO$ tunnel barriers is now described in connection with **FIGS. 2A and 2B**; $Mg_{1-x}Zn_xO$ tunnel barriers may be used instead of MgO tunnel barriers in the structures disclosed herein to form alternative embodiments. (See also U.S. application Ser. No. 10/734,425 to Parkin titled "Mg—Zn oxide tunnel barriers and method of formation" filed Dec. 12, 2003, which is hereby incorporated by reference.) The $Mg_{1-x}Zn_xO$ tunnel barriers are formed by i) first depositing, for example, a Mg—Zn layer without any oxygen (so that this Mg—Zn layer covers the underlying ferromagnetic or ferrimagnetic layer), and then by ii) depositing, for example, a layer of Mg—Zn in the presence of reactive oxygen during which process the previously deposited first Mg—Zn layer is oxidized, thereby forming the tunnel barrier.

[0052] The Mg—Zn composition of the metal layer **122** does not need to be the same as the Mg—Zn composition of the oxide layer **124**. Indeed the layer **122** can be formed from pure Mg and the layer **124** can be formed from pure ZnO. Alternatively, the layer **122** can be formed from pure Mg and the layer **124** from $[Mg_{1-x}Zn_x]O$. Alternatively, the layer **122** can be formed from an alloy with a composition $[Mg_{1-y}Zn_y]$, whereas the layer **124** can be formed by the deposition of a layer of composition $[Mg_{1-z}Zn_z]$ in the presence of reactive oxygen. In general, to form a Mg—Zn oxide tunnel barrier according to preferred implementations of the invention herein, it is only necessary that one of the layers **122** and **124** include Mg and that the other of these layers include Zn.

[0053] The Zn concentration in the layer **122** can be higher or lower than that of the layer **124**. The concentration of Zn in the layer **122** is preferably chosen to optimize the growth of the Mg—ZnO tunneling barrier **120'** as well as for the target RA value. More Zn will lead to an oxide barrier with a reduced tunnel barrier height and so lower RA. Similarly, increasing the concentration of Zn in the oxide layer **124** will also lead to lower tunneling barrier heights and so to lower RA values. For the optimal tunnel barrier with the highest thermal stability, it may be preferable to form the layer **122** from an alloy of Mg—Zn with less Zn or even from pure Mg. It may also be preferable to form a tunnel barrier by first depositing a layer of Mg or a Mg—Zn alloy with small amounts of Zn, then by secondly depositing a layer of $[Mg_{1-x}Zn_x]$ in the presence of reactive oxygen (in which this

layer contains a higher concentration of Zn), then by thirdly depositing a layer of Mg or $[Mg_{1-x}Zn_x]$ with lower concentrations of Zn in the presence of reactive oxygen. (In this case, Mg—Zn oxide tunnel barriers of two or more layers may be formed. These layers may be of the form $[Zn_{1-x}Mg_x]O$, in which the Mg atomic percentage is between 1 and 100, or between 1 and 99.) In general it may be advantageous to form the tunnel barrier **120'** from a first layer of Zn or Mg or Mg—Zn, and then by depositing a sequence of Zn or Mg or Mg—Zn additional layers, in which each of the additional layers is formed in the presence of reactive oxygen. The amount of reactive oxygen may be varied from layer to layer. For example, it may be advantageous to have more oxygen for higher concentrations of Zn. It may also be preferable to have less reactive oxygen in the last additional layer onto which the ferromagnetic electrode **134** is subsequently deposited. The Mg—ZnO tunnel barrier **120'** so formed may advantageously have a thickness of between 3 and 50 angstroms.

[0054] High tunneling magnetoresistance values have been found for a wide composition range of the ternary $[Mg_{1-x}Zn_x]O$ oxides, although the values are not typically as high as those found for oxides without any zinc. Typically, just as for MgO tunnel barriers, the TMR values were increased for thermal annealing at moderate temperatures, although the thermal stability was reduced compared to that of zinc-free MgO tunnel barriers. The thermal stability is very sensitive to the oxidation state of the $[Mg_{1-x}Zn_x]O$ layer, so that the properties of the MTJs are strongly dependent on the reactive sputtering conditions under which these oxide layers are formed, especially to the ratio of argon and oxygen in the sputter gas mixture.

[0055] The preferred embodiments and implementations of the invention are directed to certain magnetic layers and MgO or Mg—ZnO tunnel barrier layers which are substantially (100) oriented or textured. This is shown schematically in **FIG. 2C**, which shows the arrangement of atoms in a bcc structure oriented in the (100) direction with respect to the direction of tunneling of electrons. Layers **320**, **321**, **322** of atoms within an individual grain are shown for rows of atoms oriented along the [010] direction in-plane (indicated by the arrow **315**) and [100] direction perpendicular to the plane (indicated by the arrow **310**).

[0056] These magnetic and tunnel barrier layers are polycrystalline and are comprised of grains or crystallites which range in lateral extent from approximately one hundred to several hundred angstroms. Thus, these layers and the overall film structure are what is commonly referred to as textured. Texturing implies that there is a predominant crystallographic orientation of individual layers and/or the overall film structure, but that the grains are not perfectly aligned along one particular direction. Individual grains may not be precisely oriented with their (100) direction along the normal to the film layer. The (100) direction within individual grains (shown by the arrow **310** in FIGS. **2**(*b*) and **2**C may be oriented away from the normal to the plane of the film by an angle that can vary from a small fraction of one degree to several degrees or even tens of degrees for poorly textured films. The angular range of these (100) directions can be used to quantify the degree of (100) crystalline texture of the film structure and can be measured using various structural characterization techniques, including cross-section transmission electron microscopy and various x-ray diffraction techniques. There may also be present grains which are oriented in a completely different direction, but the proportion of these grains is small for the method of formation of the magnetic tunnel junction structures described herein.

[0057] The crystalline grains may be randomly oriented with respect to a direction within the plane of the substrate on which the film structures are grown, as shown in the schematic illustration in **FIG. 2D**. Various individual grains **340**, **341** and **342** are shown within the plane of the film (looking down along the normal to the plane) of various shapes and sizes. The (010) direction (illustrated by the arrow **315** in **FIG. 2C**) within the grains **340**, **341**, **342** are indicated by the arrows **330**, **331** and **332**, respectively. The (010) direction may not lie exactly in the plane of the film but may be at an angle to this plane. It is the orientation or texturing of the film which is important with regard to the preferred embodiments herein. Whereas the maximum TMR is obtained for film structures which are highly textured, the TMR will be increased to the extent that the film structure is textured. It is preferred that the angular range of a (100) direction within the grains be within + or −20 degrees of the film normal, or more preferably within + or −10 degrees, and even more preferably within + or −5 degrees. As used herein, the term "(100) oriented" should be understood to include the aforementioned deviations from the ideal case, in which all the grains are precisely oriented with their (100) direction along the normal to the film layer.

[0058] Theoretical predictions of high TMR in MTJs formed from Fe/MgO/Fe were based on perfectly atomically ordered structures in which there was no disorder within the Fe and MgO layers and no disorder at the Fe/MgO interface. Even small amounts of disorder should, in principle, invalidate the conclusions of these simple-minded theoretical predictions, since the high TMR values are related to the spin-dependent tunneling of wave-functions of a particular symmetry from the Fe layer through the MgO tunnel barrier. Exotic techniques, such as molecular beam epitaxy and deposition at elevated temperatures on single crystalline substrates, are not useful for the mass-manufacturing of cheap devices for MRAM and other applications, particularly since manufactured devices are typically grown on template layers which are either amorphous or polycrystalline.

[0059] The structures and the associated methods of preparing them described herein are entirely compatible with mass manufacturing of these devices on a wide variety of templates which are not required to have any particular crystal structure or orientation. As illustrated in **FIGS. 2C and 2D**, the structures produced using the methods described herein are not expected to be single crystalline but rather highly textured polycrystalline films. Moreover, these films, since they are prepared at nominally room temperature (although these structures could be deposited at elevated temperatures, providing these temperatures do not result in significant interdiffusion of the layers or significantly increased roughness or other changes in the polycrystalline structure or morphology not consistent with the required structural elements for high TMR or spin polarization), are likely to contain significant atomic disorder. Even small amounts of disorder are likely to significantly reduce the TMR values predicted by theory, so it is very surprising that

high TMR is observed in the devices and structures prepared using the methods described in the current invention.

[0060] A problem with the device illustrated in **FIG. 2B** is that the strong (100) crystallographic texture of the MgO layer will likely lead to significant variations in the orientation and strength of the magnetocrystalline anisotropy field from one device to the next. For prior art devices, where the crystallographic orientation of the MTJ device structure is not important, this may be mitigated by the use of ferromagnetic storage layers formed from materials that have no preferred crystallographic orientation. One class of such ferromagnetic materials are amorphous magnetic materials. For example, Co, Fe and CoFe ferromagnetic alloys, which are usually crystalline, can be made amorphous by diluting these materials with small amounts of glass forming elements. Glass forming elements are usually comprised of elements which have atomic sizes much larger or much smaller than that of the crystalline host material. Exemplary glass forming elements for Co, Fe and Co—Fe alloys are B, Si, Hf and Zr, although there are many others including the lanthanides and Y. One or more glass forming elements may be used. For example, CoFe may be combined with B and Hf.

[0061] Typically, the amount of glass forming elements required to make the host crystalline materials amorphous is in the range of 10 to 30 atomic percent. Larger quantities may be used to increase the crystallization temperature at which the alloy reverts to a crystalline form. MTJ memory storage devices, which have to be integrated with conventional microelectronic circuits to form an MRAM chip, may be subjected to high temperatures. For example, if the MTJ elements are integrated in the back end of line, they may be subjected to temperatures up to 400° C. or higher for several hours. Adding larger amounts of the glass forming element typically increases the crystallization temperature, but at the same time these elements may reduce the magnetic ordering temperature of the ferromagnetic alloy.

[0062] With reference to **FIG. 2D**, alloying typical 3d transition metal ferromagnetic alloys (those comprised of one or more of Co, Fe and Ni) with typical glass forming elements (e.g., B) causes the crystalline structure to be eliminated or results in the size of the crystalline grains being very small. With reference to **FIG. 2C**, the ordered arrangement of the atoms within the ferromagnetic material is also destroyed even on an atomic scale. Thus there is no longer any crystallographic orientation along which the magnetic moments prefer to align, so the magnetic switching characteristics of such devices are much more uniform than crystalline devices. However, as taught in U.S. patent application Ser. No. 10/824,835 to Parkin, supra, an important requirement for high TMR MTJs is that the MgO tunnel barrier be crystalline and preferably textured in the (100) orientation. This requirement would appear to preclude the use of amorphous ferromagnetic materials in such MTJs.

[0063] **FIG. 3A** shows a device of the current invention, which uses a free layer formed from an amorphous alloy of CoFeB but which nevertheless shows high tunneling magnetoresistance of more than 130%. The structures and the method of forming preferred structures are now described. The MTJ device shown in **FIG. 3A** has an exchange biased reference electrode **110'** formed beneath the MgO tunnel barrier. The magnetic state of the reference electrode remains unchanged during the operation of the device. An antiferromagnetic layer **116** is used to set the direction of the moment of the ferromagnetic layer **115** by exchange bias. The direction of the exchange bias field is set either during the fabrication of the MTJ device or by heating the device above the blocking temperature of the antiferromagnetic layer and cooling the device in the presence of a magnetic field, sufficiently large to align the moment of the layer **115** along a given direction. The antiferromagnetic layer is preferred but the device may be built without the layer **116**. The direction of the reference electrode **115** is then maintained during the operation of the device by providing a uniaxial anisotropy field. This may be provided by the intrinsic magneto-crystalline anisotropy of the layer **115** or may be provided by the shape anisotropy of the reference electrode or by other means.

[0064] In **FIG. 3A** the direction of the magnetization of the storage layer **175**, located above the tunnel barrier **120'**, is maintained either parallel or antiparallel to that of the layer **115** (on the other side of the tunnel barrier) during the operation of the device. The MTJ device of **FIG. 3A** may also be inverted, such that the reference ferromagnetic electrode is formed above the tunnel barrier and the storage layer is formed beneath the tunnel barrier.

[0065] In **FIG. 3A**, the substrate **111** is formed from an amorphous layer of SiO_2 formed on a silicon substrate. The underlayer or bottom electrical lead **112** is comprised of 100 Å Ta. An antiferromagnetic layer **116** of IrMn 150 Å thick is deposited on the Ta layer by ion beam sputter deposition using a beam of energetic krypton ions from an rf plasma ion source. The sputtering target used to form the IrMn layer has a composition of $Ir_{22}Mn_{78}$. Next, a ferromagnetic layer **115** of 35 Å $CO_{70}Fe_{30}$ is deposited. The layer **115** may be formed from one or more ferromagnetic layers **118** and **119**.

[0066] An MgO tunnel barrier **120'** is then formed on top of the lower ferromagnetic electrode **110'** using the method described in U.S. patent application Ser. No. 10/824,835 to Parkin titled "MgO tunnel barriers and method of formation" (filed Apr. 14, 2004), supra, by first depositing a thin layer of Mg having a thickness in the range of 3 to 20 Å, followed in a second step by the deposition of a layer of Mg in the presence of reactive oxygen. The thickness of the second layer, which is comprised of MgO, is typically in the range from 2 to 30 Å depending on the desired resistance-area product, which can range up to more than 10^9 $\Omega(\mu m)^2$. For the device of **FIG. 3A**, a Mg layer 6 Å thick was used, followed by an MgO layer 22 Å thick formed by reactive magnetron sputtering using an argon-oxygen plasma containing 3 atomic percent oxygen. During the deposition of the MgO layer, the Mg underlayer becomes oxidized so that the two layers form a single MgO tunnel barrier. The exact composition of the MgO layer may differ from the stochiometric composition.

[0067] Next, the MTJ device shown in **FIG. 3A** is completed by forming the top ferromagnetic electrode which is the storage layer. The storage layer is comprised of an amorphous ferromagnetic layer **175**. For example, the layer **175** may be comprised of 75 Å thick $(CO_{73}Fe_{27})_{74}B_{26}$. This layer is formed by magnetron sputtering in a pure argon plasma where a target of composition $(CO_{70}Fe_{30})_{80}B_{20}$ is used. The composition of the film and that of the target may be significantly different, especially when the target is

comprised of elements which are significantly different in atomic mass or which have significantly different sputter yields. The composition of the film was checked with Rutherford back scattering (RBS) on companion films made in the same deposition sequence which were ~1000 Å thick.

[0068] Finally, the device **300** of **FIG. 3A** is completed by forming a capping layer **136** which is comprised of 100 Å TaN followed by 75 Å Ru. The TaN layer is formed by reactive magnetron sputtering using an argon-nitrogen plasma containing about 8% nitrogen. The Ru layer is formed by ion beam sputtering.

[0069] Resistance versus field curves for the completed device of **FIG. 3A** are shown in **FIG. 4**. Several curves are shown corresponding to the properties measured on the same device at room temperature after the device has been subjected to a series of thermal anneals in a high vacuum anneal furnace at a series of increasing temperatures of 260, 300, 340, 380 and 400° C. The device is maintained at each of these temperatures for 90 minutes and is then cooled to room temperature in vacuum. Anneal times can be varied from a few minutes to a few hours depending on the temperature. The higher the temperature, the shorter the anneal required. Rapid thermal annealing is also possible which involves heating the device for the shortest possible time but at higher temperatures. During the anneal treatment the device is maintained in a magnetic field (1000 Oe) in the plane of the device. The direction of the magnetic field determines the direction of the exchange bias field provided by the IrMn antiferromagnetic layer. As can be seen from **FIG. 4**, the magnitude of the exchange bias field decreases with increasing anneal temperature but, even after the final anneal at 400° C., is ~500 Oe. The magnitude of the tunneling magnetoresistance increases with anneal temperature, as shown in more detail in **FIG. 5**, and reaches a value of nearly 140% after an anneal at 380° C. The TMR is only slightly reduced after an anneal at 400° C. Also shown in **FIG. 5** is the resistance of the device in the low resistance state of the MTJ device (when the magnetic moments **190**, **191** of the reference layer **115** are parallel to the magnetic moment **185** of the storage layer **175**). The resistance of the device (shown as the resistance-area product, RA) hardly changes at all on annealing to temperatures as high as 400° C.

[0070] The resistance of the device corresponding to **FIG. 4** is high (RA~5 MΩ(μm)^2) because the device is formed by shadow masking and has an area of ~80×80 (μm)^2. Similar MTJ structures with much lower RA values were deposited at the same time at that of **FIG. 4** and measured using the technique of CIPT (Current-in-plane-tunneling) as discussed in the paper by D. C. Worledge and P. L. Trouilloud, Appl. Phys. Lett. 83, 84 (2003). Results are shown in **FIG. 6** for a device which has a RA value of ~10 kΩ(μm)^2. This is a useful RA value for MRAM MTJ devices at the 180 nm technology node. The MTJ structure was formed in the same way as that of the device of **FIG. 4**, but the MgO barrier **120'** was formed by first depositing a wedge of Mg across a 1" diameter silicon wafer where the thickness of the Mg layer varied from ~2 to ~12 Å. Then a layer of 8 Å MgO was deposited by reactive magnetron sputtering. CIPT measurements of the resistance-area product and TMR were made at various positions along the wedge. The resistance along the Mg wedge varied from ~800 to ~10,000 Ω(μm)^2, but high TMR values exceeding 100% were recorded at all positions along the wedge after an anneal treatment at 350° C. At one end of the wedge where the RA was ~10,000 Ω(μm)^2, TMR values of more than 220% were found after an anneal treatment at 350° C. The TMR of these devices was found to increase substantially on annealing as shown in **FIG. 5**.

[0071] Thus, very high TMR values are unexpectedly found for MTJs with highly textured (100) MgO tunnel barriers but with nominally amorphous storage layers. Cross-section transmission electron microscopy reveals that a portion of the storage layer **175** adjacent to the MgO tunnel barrier **120'** has crystallized and is, moreover, textured in the same orientation as the crystalline MgO tunnel barrier. The simple cubic crystalline MgO layer thus provides a template for the formation of a thin crystalline ferromagnetic layer which has the bcc structure of CoFe and is oriented in the same (100) direction as the MgO layer. Nevertheless the bulk of the storage layer **175** remains amorphous, providing considerable improvement in the magnetic switching properties of arrays of MTJ devices.

[0072] The TMR of the device of **FIG. 3A** is nearly two times higher than the highest TMR ever reported in prior art devices using conventional alumina tunnel barriers. Moreover, the TMR of the device **300** is very similar to devices formed using storage layers comprised of crystalline CoFe alloys as described in U.S. patent application Ser. No. 10/824,835 to Parkin titled "MgO tunnel barriers and method of formation" (filed Apr. 14, 2004) and Ser. No. 10/646,246 to Parkin titled "MgO tunnel barriers and method of formation" (filed Aug. 22, 2003), which are hereby incorporated by reference. This surprising and unexpected result is likely due to the formation of a very thin crystalline ferromagnetic interface layer (which is not shown in **FIG. 3A**) at the boundary between the MgO tunnel barrier **120'** and the layer **175**. Since the phenomenon of spin-dependent tunneling is very sensitive and largely determined by the magnetic and electronic properties of the interface layers at the upper and lower faces of the tunnel barrier, only a very thin crystalline interface layer would need to be formed, perhaps by crystallization of the interface layer of the CoFeB layer **175** on the underlying MgO crystalline layer **120'**. The highly (100) textured MgO layer is likely to form an excellent template layer for the formation of a thin crystalline layer of CoFeB. It could also be that the B diffuses away from the interface with the MgO layer, during the thermal anneal treatments, to leave a thin interface layer at this interface which is much lower in B content. Electron energy loss spectroscopy in a high resolution scanning transmission electron microscope on related MTJ devices suggests this latter unexpected possibility. A lowered boron content is likely to aid the formation of a thin crystalline CoFe interface layer.

[0073] **FIG. 3B** shows an alternate embodiment of the current invention. **FIG. 3B** shows a device **300'** in which a thin interface layer **170** comprised of a crystalline CoFe alloy is first formed on the MgO tunnel barrier prior to the deposition of the amorphous ferromagnetic layer **175**. Thus the storage layer may be formed from a bilayer of two ferromagnetic layers, a first crystalline ferromagnetic layer **170** and a second amorphous ferromagnetic layer **175**. These layers may also be formed from ferrimagnetic layers, crystalline and amorphous in nature, respectively. In **FIG. 3B** the layer **170** is formed from 20 Å thick $CO_{70}Fe_{30}$, which may be deposited by magnetron or ion beam sputter deposition.

High tunneling magnetoresistance values are found with such structures exceeding 120%. The thickness of the CoFe interface layer can range preferably from 2.5 to 30 Å. The thickness of this layer is preferably kept as small as possible so that the magnetic properties of the storage layer **130'** are dominated by that of the amorphous layer **175**.

[**0074**] The two ferromagnetic layers **170** and **175** are strongly exchange coupled one to the other and so behave as a single magnetic moment. The orientation of the magnetic moment of the layer **170** is indicated by the double headed arrow **180'** and that of the layer **175** by the arrow **185**, but the moments of the two layers are always parallel to one another for sufficiently thin ferromagnetic layers.

[**0075**] It is to be understood that the use of the term amorphous as used to describe one of the ferromagnetic layers in the MTJ device refers to the nominal structure that this alloy composition would exhibit if deposited on an amorphous substrate at room temperature.

[**0076**] **FIG. 7** shows another embodiment of the current invention, a device **300"** in which a reference layer **110"** is formed from an antiparallel sandwich of two thin ferromagnetic layers **115**, **160** separated by an antiferromagnetic coupling layer **155** formed from a bcc alloy of $Cr_{70}Mo_{30}$. The storage layer **130'** is formed either from an amorphous ferromagnetic alloy layer **175** as shown in **FIG. 3A** or from a bilayer comprising a thin crystalline ferromagnetic layer **170** and an amorphous ferromagnetic layer **175** as shown in **FIG. 3B**. The underlayer or bottom electrical lead **112** is comprised of a 200 Å bilayer of TaN and Ta. TaN is formed by reactive magnetron sputtering from a Ta target in an Ar—N_2 gas mixture containing ~6% nitrogen. The nitrogen content in the gas mixture is preferably chosen to give a slightly nitrogen deficient TaN layer which gives rise to an improved texturing of the overlying Ta layer and IrMn layer **116**. The Ta layer of the underlayer **112** may be 75 Å Ta sputter deposited using the same Ta target but using pure argon sputtering gas. An antiferromagnetic layer **116** of IrMn 250 Å thick is deposited on the Ta layer by ion beam sputter deposition using a beam of energetic krypton ions from an rf plasma ion source. Next a ferromagnetic layer **115** of 35 Å $CO_{70}Fe_{30}$ is deposited. The layer **115** may be formed from one or more ferromagnetic layers **118** and **119**.

[**0077**] An antiferromagnetic coupling layer **155** formed from 17.5 Å $Cr_{80}Mo_{20}$ is deposited on top of layer **115**. The lower ferromagnetic electrode **110"** is completed with the layer **160** (whose magnetic orientation is given by the arrow **165**), which is formed from 25 Å $CO_{70}Fe_{30}$. The layers **160** and **115** are antiferromagnetically coupled by indirect exchange coupling through the metallic CrMo layer **155**.

[**0078**] Finally, the MTJ device shown in **FIG. 7** is completed by forming the top ferromagnetic electrode **130'** which is the storage layer. The storage layer is formed from a bilayer of two ferromagnetic layers. First a crystalline layer **170** comprised of 20 Å $CO_{70}Fe_{30}$ is deposited by magnetron sputter deposition followed by a layer **175** which is comprised of a Co—Fe—B alloy, specifically, $(CO_{70}Fe_{30})_{80}B_{20}$ which is 120 Å thick. The layer **175** is also deposited by magnetron sputter deposition from a single sputter target. Layer **175** is nominally amorphous in nature.

[**0079**] The storage layer **130'** is capped with a layer **136** which is here comprised of 100 Å TaN|followed by 75 Å Ru. The TaN is formed by reactive sputtering of Ta in an Ar—N_2 gas mixture where the N_2 composition is chosen so that the TaN is fully nitrided. A gas mixture with 10% N_2 was used here.

[**0080**] Typical resistance-versus-field curves for the structure shown in **FIG. 7** are presented in **FIG. 8**. The data in **FIG. 8A** show a TMR exceeding 100% which is far higher than has previously been observed for MgO-based MTJs with a synthetic antiferromagnet reference layer. The exchange bias of the IrMn antiferromagnetic exchange bias layer was set by annealing the samples at 260° C. for 90 minutes in a high vacuum anneal furnace in the presence of a magnetic field of 1 Tesla. The MgO tunnel barrier corresponding to the data in **FIG. 8** was formed by first depositing a Mg layer 6 Å thick followed by the reactive magnetron sputter deposition of an MgO layer 24.5 and 26 Å thick, respectively for the two sets of data.

[**0081**] The structure of the current invention shown in **FIG. 7** has both an improved synthetic antiferromagnet reference layer and an improved storage layer suitable for high TMR magnetic tunnel junctions. The combination of the highly magnetically stable reference layer, which is a suitable underlayer for the growth of a (100) oriented MgO or $Mg_{1-x}Zn_xO$ tunnel barrier required for very high TMR, and a storage layer, which is formed from an amorphous ferromagnetic alloy or a bilayer comprised of an amorphous ferromagnetic layer with a thin crystalline interface layer, give MTJ devices with improved magnetic switching characteristics. The uniformity of the magnetic switching fields of an array of MTJ memory devices can be characterized by an array quality factor (AQF) where this factor is defined as the ratio of the magnitude of the average magnetic switching field for the devices within the array to the standard deviation of the distribution of switching fields, assuming a Gaussian distribution of switching fields. Large AQF factors are needed to make operable a cross-point MTJ based MRAM chip when the devices are switched by applying a combination of a write-line and a bit-line writing field. The AQF factors are significantly increased for MgO based MTJ devices when the storage layer of the present invention is used in combination with the improved synthetic antiferromagnetic layer shown in **FIG. 7**.

[**0082**] **FIG. 9** shows the dependence of (a) the tunneling magnetoresistance and (b) the antiferromagnetic coupling field for various MTJs of the present invention with two different Co—Fe alloy reference layer compositions as a function of thickness of the Cr—Mo antiferromagnetic coupling layer for two different Cr—Mo compositions. The detailed structure of the MTJs was 200 Å TaN|75 Å Ta|250 Å IrMn|25 Å $Co_{60}Fe_{40}$ or $Co_{50}Fe_{50}$|xÅ CrMo|25 Å $Co_{60}Fe_{40}$ or $CO_{50}Fe_{50}$|MgO|20 Å $Co_{60}Fe_{40}$ or $Co_{50}Fe_{50}$|120 Å $(Co_{70}Fe_{30})_{80}B_{20}$|100 Å TaN|75 Å Ru|. The MgO was formed using the two step process described earlier. The samples were annealed at 260° C. for 90 minutes in high vacuum and in a field of 1 Tesla to set the IrMn exchange bias.

[**0083**] The TMR was found to depend strongly on the composition of the Co—Fe reference ferromagnetic layers **115** and **160** with higher Fe content yielding higher TMR. The highest TMR values were found for $Co_{100-x}Fe_x$ layers with x ~50-60 (i.e., 50-60 atomic %). Similar results were found for $CO_{60}Fe_{40}$ and $CO_{50}Fe_{50}$. The data shown in **FIG. 9A** are averaged over 10 junctions formed on one wafer

where the junctions have areas of ~100×100 $(\mu m)^2$ and are formed by a series of shadow masks placed successively on the silicon substrate without breaking vacuum under computer control.

[0084] Antiferromagnetic coupling layers formed from Cr—Mo alloys gave improved TMR compared to layers formed from pure Cr. The likely explanation is that the polycrystalline (100) texture is greater or is improved for Cr—Mo spacer layers compared to pure Cr. On the other hand if too much Mo is added to the alloy, the strength of the antiferromagnetic coupling will be greatly diminished. As originally discovered by Parkin (see Phys. Rev. Lett. 67, 3598 (1991) and 64, 2304 (1990)), there is a systematic variation of the overall strength of the oscillatory interlayer exchange coupling in both Cr and Ru spacer layers, such that the coupling strength increases along the 3d, 4d and 5d transition metal periods and is systematically greater for 3d compared to 4d compared to 5d elements from the same column in the Periodic Table. Thus the coupling strength through Mo is much weaker than through Cr. The preferred range of composition of Mo in Cr—Mo alloys is ~10 to 50 atomic % Mo. Moreover, as more Mo is added the oscillation period is decreased making the strength of the antiferromagnetic coupling more sensitive to the thickness of the spacer layer. It is preferred to use an alloy composition with the largest possible period of oscillation of the oscillatory interlayer coupling so that the strength of the antiferromagnetic coupling is not strongly dependent on the spacer layer thickness. This provides a greater window of manufacturability.

[0085] The data shown in **FIG. 9** are given for CrMo thicknesses of the CrMo layer **155** for which the layers **115** and **160** are antiferromagnetically coupled. The indirect magnetic exchange coupling between two ferromagnetic layers mediated by Cr oscillates between ferromagnetic and antiferromagnetic coupling as the thickness of the Cr spacer layer is increased (see "Oscillations in Exchange Coupling and Magnetoresistance in Metallic Superlattice Structures: Co/Ru, Co/Cr and Fe/Cr", Phys. Rev. Lett. 64, 2304 (1990)). Similarly, for Cr—Mo alloys the coupling also oscillates between ferromagnetic coupling and antiferromagnetic coupling. For the range of CrMo thickness shown in **FIG. 9**, the coupling is antiferromagnetic but the strength of the coupling varies with the thickness of the CrMo layer and is largest for CrMo thicknesses in the range of 14-16 Å. However, there is a broad range of CrMo thickness for which the coupling is antiferromagnetic which makes the use of CrMo attractive. For example, for an antiferromagnetic coupling layer formed from $Cr_{70}Mo_{30}$, antiferromagnetic coupling is found for thicknesses ranging from ~10 to 20 Å, although the largest magnitude of the coupling is found for thicknesses in the middle of this range. The exact range of thicknesses varies with the Cr—Mo alloy composition but is readily determined by forming a series of MTJ structures in which the thickness of this spacer layer is varied and the magnitude of the coupling strength determined by measuring the field required to bring the moments of the ferromagnetic layers on either side of the spacer layer parallel to one another.

[0086] **FIG. 10** compares resistance versus field loops for MTJs (for the same structures used to collect the data of **FIG. 9**) with ferromagnetic layers formed from three different CoFe compositions (used for layers **115**, **160**, and **170**) and antiferromagnetic coupling layers formed from $Cr_{80}Mo_{20}$. Major and minor loops are shown in **FIGS. 10A and 10B**, respectively. The layer **175** was formed from $(CO_{70}Fe_{30})_{80}B_{20}$. The TMR is similar for three different CoFe compositions with 30, 40 and 50 atomic % Fe. The coercivity of the storage layer also varies little with CoFe composition for these large area junctions.

[0087] **FIG. 11** shows another representative embodiment of the current invention in which the structure of the devices shown in **FIGS. 3A and 3B** is inverted so that the storage layer or electrode is formed beneath the tunnel barrier and the reference electrode is formed above the tunnel barrier. The structure is formed on a substrate **111** such as an amorphous layer of SiO_2 on a silicon substrate. An underlayer **512** is then deposited on the wafer **111**. To form this layer **512**, first a layer of MgO is formed by reactive sputtering of Mg in an argon-oxygen plasma containing 3 percent oxygen. Then a Ta layer, 100 Å thick is deposited by magnetron sputtering in pure argon. The structure of the Ta layer is very sensitive to the deposition parameters including the rate of deposition of the Ta layer (power applied to the magnetron source). Alternate combinations of materials for the underlayer may be used. The Ta layer may be used without the MgO underlayer. The underlayer **512** ideally provides a smooth surface on which a storage electrode **510** is subsequently formed. The underlayer **512** is preferably chemically inert and unreactive with the electrode **510** and also sufficiently thermally stable that during the processing of the MTJ device **500** there is little chemical or physical interaction with the storage electrode **510**. It is also preferred that the underlayer have an amorphous or polycrystalline fine-grained structure, so that crystallization of the amorphous layer **515** comprising the reference ferromagnetic electrode deposited on the underlayer **512** is not encouraged.

[0088] The storage magnetic electrode **510** is formed on the underlayer **512** by deposition of a layer **515** comprising an amorphous ferromagnetic alloy. The electrode may be formed from a wide variety of amorphous ferromagnetic materials but particularly the family of 3d transition metal ferromagnetic alloys combined with glass forming elements, such as B, Hf, Zr and Si. In **FIG. 11 a** layer **515** of CoFeB is deposited which is 60 Å thick. The composition of the layer as determined by RBS analysis is $CO_{57}Fe_{23}B_{20}$ (or $(CO_{60}Fe_{40})_{80}B_{20}$ where a sputtering target with a nominal composition of $CO_{59.5}Fe_{25.5}B_{15}$ was used). An interface layer **520** of a crystalline CoFe alloy may also be used. In **FIG. 11 a** layer **520** of 15 Å of $CO_{70}Fe_{30}$ was formed. The magnetic moments of the layers **515** and **520** are strongly exchange coupled so the bilayer behaves as a single ferromagnetic layer whose magnetization direction is given by the double headed arrow **521**.

[0089] A MgO tunnel barrier **540** is then formed according to the methods describe in U.S. patent application Ser. No. 10/824,835 to Parkin titled "MgO tunnel barriers and method of formation" (filed Apr. 14, 2004) and Ser. No. 10/646,246 to Parkin titled "MgO tunnel barriers and method of formation" (filed Aug. 22, 2003). First a layer of 8 Å Mg is formed followed by 27 Å MgO which is formed by deposition of Mg in an argon-oxygen plasma containing 3 percent oxygen. Finally the MTJ device is completed by forming the reference magnetic electrode **560** and a capping layer **590**. The reference electrode **560** in **FIG. 11** is an exchange biased ferromagnetic layer. The ferromagnetic

layer may be comprised of one or more layers of ferromagnetic and non-ferromagnetic materials provided that the ferromagnetic layers are coupled to one another either ferromagnetically or antiferromagnetically. An interface layer **555** may first be formed from a crystalline CoFe alloy followed by an amorphous layer **565** comprised of, for example, a CoFeB alloy. These layers will be strongly ferromagnetically exchange coupled so that their net magnetic moment direction may be represented by the arrow **561**. An exchange bias layer **580** is formed on top of the amorphous layer **565** which fixes the direction of the magnetic moment of the reference electrode shown by the arrow **561**.

[**0090**] Typical resistance versus field curves for an MTJ device formed according to the structure of **FIG. 11** are shown in **FIG. 12**. The reference electrode is formed from a single layer **555** of 80 Å of $CO_{70}Fe_{30}$, without the layer **565**. The exchange bias layer **580** is formed from 250 Å $Ir_{25}Mn_{75}$. A capping layer **590** of 100 Å TaN and 75 Å Ru was used. The device exhibits a tunneling magnetoresistance of 120% after it has been annealed at a succession of temperatures to a final anneal temperature of 380° C. The device shows more than 100% TMR after a first anneal at 260° C. for 90 minutes. The device shows excellent magnetic properties with very square magnetic hysteresis loops as shown in **FIG. 12A**. The coercive field is only a little increased even after annealing at 380° C. so that the device shows remarkable thermal stability.

[**0091**] The detailed dependence of TMR and resistance, measured at room temperature, versus anneal temperature are shown in **FIG. 13** for a typical shadow masked magnetic tunnel junction device. The TMR increases as the anneal temperature is increased from 280° C. to 380° C. and then is slightly reduced for a higher annealing temperature at 400° C. The resistance of the junction changes little even for anneals at temperatures of 400° C.

[**0092**] Although examples of the various embodiments of the current invention have been described with regard to the use of MgO tunnel barriers, the MgO tunnel barrier may be replaced by a barrier formed from $Mg_{1-x}Zn_xO$ or from a barrier comprised of multiple layers of $Mg_{1-x}Zn_xO$, where x is varied from layer to layer or may be formed from one or more layers of MgO and $Mg_{1-x}Zn_xO$. (See U.S. application Ser. No. 10/734,425 to Parkin titled "Mg—Zn oxide tunnel barriers and method of formation" filed Dec. 12, 2003.)

[**0093**] Similarly, the use of amorphous ferromagnetic materials in combination with MgO or MgZnO tunnel barriers is not limited to magnetic tunnel junctions but may also be used to create improved tunnel spin injectors. The structure and method of formation of tunnel spin injectors for spintronic devices using MgO tunnel barriers is described in U.S. patent application Ser. No. 10/646,247 to Parkin titled "MgO-based tunnel spin injectors", filed Aug. 22, 2003, which is hereby incorporated by reference. An exemplary tunnel spin injector **600** is described in **FIG. 14**. The tunnel barrier **540** and the layers **555**, **565**, **580** and **590** correspond to those of the magnetic tunnel junction device **500** of **FIG. 11** but the tunnel barrier **540** is deposited onto a semiconducting substrate **111**'. The substrate may be formed from GaAs, AlAs, or $As_{1-x}Ga_xAs$, for example. The tunnel spin injector formed from the MgO or MgZnO tunnel barrier, here in combination with an amorphous CoFe based alloy ferromagnetic electrode, gives rise highly spin polarized electrical current which can be injected into the semiconducting substrate. Thus this improved tunnel spin injector has advantages for a wide variety of spin-based electronic devices (spintronic devices).

[**0094**] Similarly, the MgO tunnel barrier could be replaced by one of the family of simple cubic or zinc blende tunnel barriers including ZnS, ZnSe and ZnTe, CdS, CdSe and CdTe, and AlAs and related materials including insulating $Al_{1-x}Ga_xAs$. These materials will grow in a highly textured crystallographic orientation on bcc ferromagnetic metals.

[**0095**] While the preferred embodiments of the current invention apply to structures with (100) texturing for the highest possible TMR or spin polarization values, the structures and devices described herein may be prepared in other crystallographic orientations, and so be advantageous in other regards.

[**0096**] While the present invention has been particularly shown and described with reference to the preferred embodiments, it will be understood by those skilled in the art that various changes in form and detail may be made without departing from the spirit and scope of the invention. Accordingly, the disclosed invention is to be considered merely as illustrative and limited in scope only as specified in the appended claims.

1. A structure, comprising:

at least one tunnel barrier selected from the group of tunnel barriers consisting of MgO and Mg—ZnO; and

an amorphous magnetic layer that includes Co and at least one additional element selected to make the layer amorphous, wherein the amorphous layer is in proximity with the tunnel barrier, thereby permitting spin-polarized current to pass between the tunnel barrier and the magnetic layer.

2. The structure of claim 1, wherein the amorphous layer includes an alloy of Co and Fe.

3. The structure of claim 1, comprising a crystalline layer sandwiched between the amorphous layer and the tunnel barrier.

4. The structure of claim 3, wherein the crystalline layer includes an alloy of Co and Fe.

5. The structure of claim 3, wherein the crystalline layer is in direct contact with both the amorphous layer and the tunnel barrier.

6. The structure of claim 1, wherein said at least one additional element comprises at least 10 atomic % of the amorphous layer.

7. The structure of claim 1, wherein said at least one additional element includes B.

8. The structure of claim 1, wherein said at least one additional element includes Zr.

9. The structure of claim 1, wherein said at least one additional element includes Hf.

10. The structure of claim 1, wherein the amorphous layer has a thickness in the range of 15 to 200 angstroms.

11. The structure of claim 1, wherein the crystalline layer has a thickness that is selected to be small enough that the crystalline layer does not significantly adversely impact the switching characteristics of the structure.

12. The structure of claim 1, wherein the tunnel barrier is oriented in the (100) direction.

13. The structure of claim 1, further comprising an additional layer of magnetic material selected from the group consisting of ferromagnetic materials and ferrimagnetic materials, wherein the additional magnetic layer is in proximity with the tunnel barrier, and wherein the additional magnetic layer, the amorphous layer, and the tunnel barrier form a magnetic tunnel junction.

14. The structure of claim 13, wherein the tunnel junction has a TMR of greater than 50% at room temperature.

15. The structure of claim 13, wherein the tunnel junction has a TMR of greater than 100% at room temperature.

16. The structure of claim 13, wherein the tunnel junction has a TMR of greater than 160% at room temperature.

17. The structure of claim 13, wherein the tunnel junction has a TMR of greater than 200% at room temperature.

18. The structure of claim 13, wherein the additional magnetic layer has a body-centered cubic (bcc) structure.

19. The structure of claim 1, wherein the tunnel barrier comprises a MgO tunnel barrier.

20. The structure of claim 1, wherein the tunnel barrier comprises a Mg—ZnO tunnel barrier.

21. The structure of claim 1, further comprising an additional structure that comprises:

a first body centered cubic (bcc) magnetic layer and a second bcc magnetic layer, wherein the first and second magnetic layers include material selected from the group consisting of ferromagnetic materials and ferrimagnetic materials; and

at least one spacer layer of bcc material between the magnetic layers, wherein the spacer layer exchange couples the first and second bcc magnetic layers, wherein the additional structure, the tunnel barrier, and the amorphous layer form a magnetic tunnel junction.

22. The structure of claim 1, further comprising a semiconductor layer in proximity with the tunnel barrier, wherein the semiconductor layer, the amorphous layer, and the tunnel barrier form a tunnel spin injector device.

23. A structure, comprising:

at least one tunnel barrier selected from the group of tunnel barriers consisting of MgO and Mg—ZnO;

an amorphous magnetic layer that includes Co and at least one additional element selected to make the layer amorphous, wherein the amorphous layer is in proximity with the tunnel barrier;

a crystalline layer between the amorphous layer and the tunnel barrier; and

an additional layer of magnetic material selected from the group consisting of ferromagnetic materials and ferrimagnetic materials, wherein the tunnel barrier, the amorphous layer, the crystalline layer, and the additional magnetic layer are configured to form a magnetic tunnel junction having a tunneling magnetoresistance (TMR) of at least 50%.

24. The structure of claim 23, wherein said at least one additional element comprises at least 10 atomic % of the amorphous layer.

25. The structure of claim 23, wherein said at least one additional element includes B.

26. The structure of claim 23, wherein said at least one additional element includes Zr.

27. The structure of claim 23, wherein said at least one additional element includes Hf.

28. The structure of claim 23, wherein the amorphous layer has a thickness in the range of 15 to 200 angstroms.

29. The structure of claim 23, wherein the amorphous layer includes an alloy of Co and Fe.

30. The structure of claim 23, wherein the tunnel barrier is oriented in the (100) direction.

31. The structure of claim 23, wherein the tunnel junction has a TMR of greater than 100% at room temperature.

32. The structure of claim 23, wherein the tunnel junction has a TMR of greater than 160% at room temperature.

33. The structure of claim 23, wherein the tunnel junction has a TMR of greater than 200% at room temperature.

34. The structure of claim 23, wherein the additional magnetic layer has a body-centered cubic (bcc) structure.

35. The structure of claim 23, wherein the tunnel barrier includes a Mg—ZnO tunnel barrier.

36. The structure of claim 23, wherein the tunnel barrier includes a MgO tunnel barrier.

37. The structure of claim 23, wherein:

the tunnel barrier comprises a MgO tunnel barrier;

the structure has a TMR of greater than 100% at room temperature;

the amorphous layer and the crystalline layer each include an alloy of Co and Fe;

the additional magnetic layer has a body-centered cubic (bcc) structure; and

tunnel barrier has a simple cubic structure and is oriented in the (100) direction.

38. The structure of claim 37, wherein the additional magnetic layer is oriented in the (100) direction.

39. The structure of claim 23, wherein the additional magnetic layer comprises:

a first body centered cubic (bcc) magnetic layer and a second bcc magnetic layer, wherein the first and second magnetic layers include material selected from the group consisting of ferromagnetic materials and ferrimagnetic materials; and

at least one spacer layer of bcc material between the magnetic layers, wherein the spacer layer exchange couples the first and second bcc magnetic layers.

40. The structure of claim 39, wherein said at least one spacer layer includes Cr.

41. The structure of claim 40, wherein said at least one spacer layer includes Mo.

42. A method, comprising:

forming a tunnel barrier selected from the group of tunnel barriers consisting of MgO and Mg—ZnO; and

forming an amorphous ferromagnetic layer by depositing Co and at least one other element on an underlayer, wherein the amorphous layer and the tunnel barrier are formed in proximity to one another to permit spin-polarized current to be passed between the tunnel barrier and the amorphous layer.

43. The method of claim 42, wherein the underlayer includes the tunnel barrier.

44. The method of claim 43, wherein the amorphous ferromagnetic layer is formed directly on the tunnel barrier.

45. The method of claim 42, wherein the tunnel barrier is formed on an underlayer that includes the amorphous layer.

46. The method of claim 45, wherein the tunnel barrier is formed directly on the amorphous layer.

47. The method of claim 42, comprising depositing Fe onto the tunnel barrier, the amorphous layer including Co, Fe, and said at least one other element.

48. The method of claim 42, wherein said at least one other element includes B.

49. The method of claim 42, wherein said at least one other element includes Zr.

50. The method of claim 42, wherein said at least one other element includes Hf.

51. The method of claim 42, wherein the amorphous ferromagnetic layer includes a thin crystalline layer that is in contact with the tunnel barrier.

52. The method of claim 42, wherein the tunnel barrier is (100) oriented.

53. The method of claim 42, further comprising depositing an additional magnetic layer in proximity with the tunnel barrier to form a magnetic tunnel junction.

54. The method of claim 53, wherein the additional magnetic layer has a body centered cubic structure.

55. The method of claim 53, further comprising annealing the junction to improve its tunneling magnetoresistance.

56. The method of claim 53, wherein the junction is annealed at a temperature selected to yield a tunnel magnetoresistance of greater than 100% at room temperature.

57. The method of claim 53, wherein the junction is annealed at a temperature selected to yield a tunnel magnetoresistance of greater than 160% at room temperature.

58. The method of claim 53, wherein the junction is annealed at a temperature selected to yield a tunnel magnetoresistance of greater than 200% at room temperature.

59. The method of claim 53, wherein the junction is annealed at a temperature greater than 300° C.

60. The method of claim 53, wherein the junction is annealed at a temperature greater than 340° C.

61. The method of claim 53, wherein the junction is annealed at a temperature in the range of 300° C. to 400° C.

62. The method of claim 42, wherein the tunnel barrier includes a MgO tunnel barrier.

63. The method of claim 62, wherein the MgO tunnel barrier is formed by:

depositing Mg onto a surface of an underlayer to form a Mg layer thereon, wherein the surface is selected to be substantially free of oxide; and

directing additional Mg, in the presence of oxygen, towards the Mg layer to form a MgO tunnel barrier in contact with the underlayer, the oxygen reacting with the additional Mg and the Mg layer.

64. The method of claim 42, wherein the tunnel barrier includes a Mg—ZnO tunnel barrier.

65. A method of claim 64, wherein the Mg—ZnO tunnel barrier is formed by:

depositing a metal layer onto a surface of an underlayer, wherein the surface is selected to be substantially free of oxide; and

directing additional metal towards the metal layer, in the presence of oxygen, to form a magnesium-zinc oxide tunnel barrier in contact with the underlayer, the oxygen reacting with the additional metal and the metal layer, wherein:

at least one of the metal layer and the additional metal includes Zn, and

at least one of the metal layer and the additional metal includes Mg.

66. The structure of claim 1, wherein the tunnel barrier is crystalline.

67. The structure of claim 66, wherein the tunnel barrier includes polycrystalline grains.

68. The structure of claim 66, wherein the tunnel barrier is oriented in the (100) direction.

69. The structure of claim 23, wherein the tunnel barrier is crystalline.

70. The structure of claim 69, wherein the tunnel barrier includes polycrystalline grains.

71. The structure of claim 69, wherein the tunnel barrier is oriented in the (100) direction.

72. The method of claim 1, wherein the tunnel barrier is crystalline.

73. The method of claim 72, wherein the tunnel barrier includes polycrystalline grains.

74. The method of claim 72, wherein the tunnel barrier is oriented in the (100) direction.

* * * * *