PTO/SB/16 (10-07)
Approved for use through 06/30/2010. OMB 0651-0032
U.S. Patent and Trademark Office; U.S. DEPARTMENT OF COMMERCE
Under the Paperwork Reduction Act of 1995, no persons are required to respond to a collection of information unless it displays a valid OMB control number.

PROVISIONAL APPLICATION FOR PATENT COVER SHEET – Page 1 of 2

This is a request for filing a PROVISIONAL APPLICATION FOR PATENT under 37 CFR 1.53(c).

Express Mail Label No. Transmitted Via EFS-Web

INVENTOR(S)		
Given Name (first and middle [if any])	Family Name or Surname	Residence (City and either State or Foreign Country)
Thomas	Rusert	Aachen, Germany
Rickard	Sjöberg	Stockholm, Sweden
Jacob	Ström	Stockholm, Sweden
Per	Wennersten	Arsta, Sweden
Kenneth	Andersson	Gavle, Sweden

Additional inventors are being named on the _____ *separately numbered sheets attached hereto*

TITLE OF THE INVENTION (500 characters max):

MOTION VECTOR CODING

Direct all correspondence to: **CORRESPONDENCE ADDRESS**

☑ The address corresponding to Customer Number: 27045

OR

☐ Firm or Individual Name

Address

City	State	Zip
Country	Telephone	Email

ENCLOSED APPLICATION PARTS ***(check all that apply)***

☐ Application Data Sheet. See 37 CFR 1.76

☐ CD(s), Number of CDs _____

☐ Drawing(s) *Number of Sheets* _____

☐ Other (specify) _____

☑ Specification (e.g. description of the invention) *Number of Pages* 14

Fees Due: Filing Fee of $220 ($105 for small entity). If the specification and drawings exceed 100 sheets of paper, an application size fee is also due, which is $270 ($130 for small entity) for each additional 50 sheets or fraction thereof. See 35 U.S.C. 41(a)(1)(G) and 37 CFR 1.16(s).

METHOD OF PAYMENT OF THE FILING FEE AND APPLICATION SIZE FEE FOR THIS PROVISIONAL APPLICATION FOR PATENT

☐ Applicant claims small entity status. See 37 CFR 1.27.

☐ A check or money order is enclosed to cover the filing fee and application size fee (if applicable).

☐ Payment by credit card. Form PTO-2038 is attached

☑ The Director is hereby authorized to charge the filing fee and application size fee (if applicable) or credit any overpayment to Deposit Account Number: 50-1379. A duplicative copy of this form is enclosed for fee processing.

220.00

TOTAL FEE AMOUNT ($)

USE ONLY FOR FILING A PROVISIONAL APPLICATION FOR PATENT

This collection of information is required by 37 CFR 1.51. The information is required to obtain or retain a benefit by the public which is to file (and by the USPTO to process) an application. Confidentiality is governed by 35 U.S.C. 122 and 37 CFR 1.11 and 1.14. This collection is estimated to take 8 hours to complete, including gathering, preparing, and submitting the completed application form to the USPTO. Time will vary depending upon the individual case. Any comments on the amount of time you require to complete this form and/or suggestions for reducing this burden, should be sent to the Chief Information Officer, U.S. Patent and Trademark Office, U.S. Department of Commerce, P.O. Box 1450, Alexandria, VA 22313-1450. DO NOT SEND FEES OR COMPLETED FORMS TO THIS ADDRESS. **SEND TO: Commissioner for Patents, P.O. Box 1450, Alexandria, VA 22313-1450.**

If you need assistance in completing the form, call 1-800-PTO-9199 and select option 2.

PTO/SB/16 (10-07)
Approved for use through 06/30/2010. OMB 0651-0032
U.S. Patent and Trademark Office; U.S. DEPARTMENT OF COMMERCE
Under the Paperwork Reduction Act of 1995, no persons are required to respond to a collection of information unless it displays a valid OMB control number.

The invention was made by an agency of the United States Government or under a contract with an agency of the United States Government.

☑ No.

☐ Yes, the name of the U.S. Government agency and the Government contract number are: _____

WARNING:

Petitioner/applicant is cautioned to avoid submitting personal information in documents filed in a patent application that may contribute to identity theft. Personal information such as social security numbers, bank account numbers, or credit card numbers (other than a check or credit card authorization form PTO-2038 submitted for payment purposes) is never required by the USPTO to support a petition or an application. If this type of personal information is included in documents submitted to the USPTO, petitioners/applicants should consider redacting such personal information from the documents before submitting them to the USPTO. Petitioner/applicant is advised that the record of a patent application is available to the public after publication of the application (unless a non-publication request in compliance with 37 CFR 1.213(a) is made in the application) or issuance of a patent. Furthermore, the record from an abandoned application may also be available to the public if the application is referenced in a published application or an issued patent (see 37 CFR 1.14). Checks and credit card authorization forms PTO-2038 submitted for payment purposes are not retained in the application file and therefore are not publicly available.

SIGNATURE Sidney L. Weatherford Date February 05, 2010

TYPED or PRINTED NAME Sidney L. Weatherford REGISTRATION NO. 45,602 *(if appropriate)*

TELEPHONE 972-583-8656 Docket Number: **P31108-US1**

Motion vector coding

1 Background

1.1 Technical Background/Existing Technology

Recent video coding standards are based on the hybrid coding principle, which comprises motion compensated temporal prediction of video frames and coding of frame residual signals. For efficient motion compensated temporal prediction, block-based motion models are used to describe motion across e.g. pairs of frames. Each motion compensation block is assigned e.g. one (for uni-predictive temporal prediction, e.g. in P frames) or two (for bi-predictive temporal prediction in B frames) motion vectors. These vectors need to be coded in the video bit stream along with the frame residual signals.

At high compression ratios (or equivalently, low video bitrates), motion vector coding takes a large part of the total amount of bits, especially in recent video coding standards such as H.264/AVC where small motion compensation block sizes are used. Typically, lossless predictive coding of motion vectors is used, i.e. coding of a motion vector MV consists of (1) building a motion vector predictor PMV for the vector to be coded and (2) transmitting the difference DMV=MV-PMV between the motion vector and the motion vector predictor.

In H.264/AVC, PMV is derived as the median of the motion vectors of 3 spatially neighboring blocks. Other approaches consider also temporally neighboring blocks (i.e. co-located in neighboring frames) for motion vector prediction. Instead of using a fixed rule for building PMV, recently approaches have been presented that explicitly signal a PMV to be used out of a set of PMV candidates, PMV_CANDS **Error! Reference source not found.Error! Reference source not found.Error! Reference source not found.**. Although this requires additional bits to signal one candidate out of the set, it can overall save bits for motion vector coding, since DMV coding can be more efficient.

1.2 Problems with existing solutions

The efficiency of motion vector coding schemes with PMV candidate signaling depends on the suitability of candidates in PMV_CANDS, i.e. the construction of the candidate list has major impact on the coding performance. Existing approaches **Error! Reference source not found.Error! Reference source not found.Error! Reference source not found.** typically use motion vectors from spatially surrounding blocks or temporally neighboring blocks (co-located blocks in neighboring frames). Such construction of PMV_CANDS, i.e. considering only few surrounding blocks as source of motion vector predictors, may be sub-optimal.

Amazon.com, Inc., Amazon.com Services LLC - Ex. 1012, 000003

The number of candidates in PMV_CANDS, i.e. the "length" of PMV_CANDS, has a major impact on coding efficiency, too. The reason is that the higher the number of candidates, the higher the number of bits required for signaling one of the candidates. Although even with a large list, some candidates may be signaled with few bits (if appropriate VLC coding is used), other candidates will require more bits for signaling, which in turn causes additional overhead and thus reduced compression efficiency. Existing approaches **Error! Reference source not found.Error! Reference source not found.Error! Reference source not found.** assume a fixed number of candidates in PMV_CANDS (e.g. the spatially neighboring motion vectors) valid for coding of a video frame or sequence, and the number of candidates may only be reduced if some of the candidates are identical. Efficient approaches for adapting the length of PMV_CANDS are missing.

Finally, coding efficiency is affected through the selected scheme for signaling a candidate in PMV_CANDS. Efficient schemes are missing, especially for bi-predicted blocks where two motion vectors are coded.

2 Basic Concept of the Invention

This invention describes methods for building lists of PMV candidates PMV_CANDS. It is assumed that the candidates in PMV_CANDS are sorted, and use of one of the candidates in PMV_CANDS is signaled such that the first candidate in the list is assigned the shortest code word among the candidates and that subsequent candidates in the list are assigned code words with non-decreasing length (it is apparent that any other equivalent mapping of candidates on code words could be likewise applied). Then, using a combination of several methods, PMV_CANDS is constructed such that candidates that are most beneficial for prediction are arranged towards the beginning of the list. Also, using these methods, the candidates in the list are selected such that they are of good use for coding of motion vectors, and if only few such candidates are available, then the size of the list is reduced such that the code words for signaling use of a candidate can be reduced in length. Finally, methods for efficient signaling of use of PMV candidates are presented.

3 Detailed description

Note that all methods described in this section that affects the PMV_CANDS list also takes place in the decoder. Also, even though the generation of the signaling bits is done in the encoder, the decoder parses the bits and mimics the encoder in order to achieve encoder/decoder synchronization.

Amazon.com, Inc., Amazon.com Services LLC - Ex. 1012, 000004

3.1 Detailed Technical Description of the Invention

The proposed methods assume coding of a motion vector MV using predictive coding techniques, where a motion vector predictor MVP is used to predict MV, and the prediction error DMV=MV-PMV is signaled from the encoder to the decoder. Additionally, a code ("index") is sent to select a PMV candidate from a list of PMV candidates, PMV_CANDS, see Figure 1. "index" may be sent once together with each transmitted motion vector MV, i.e. per sub-block (e.g. 8x8 pixel block). It may likewise be sent for groups of motion vectors, e.g. per macroblock (16x16 block).

PMV_CANDS has N elements. PMV_CANDS is identically available at both the encoder and the decoder. Using the transmitted "index", the decoder can determine PMV as used in the encoder, and thus reconstruct MV=DMV+PMV.

In the following, details of the system depicted in Figure 1, in particular concerning construction of PMV_CANDS and signaling of "index", are described in detail. Methods for updating PMV_CANDS are depicted in Section 3.1.1. Methods for adapting the number of elements in PMV_CAND are depicted in Section 3.1.2. Methods for coding of "index" are depicted in 3.1.3.

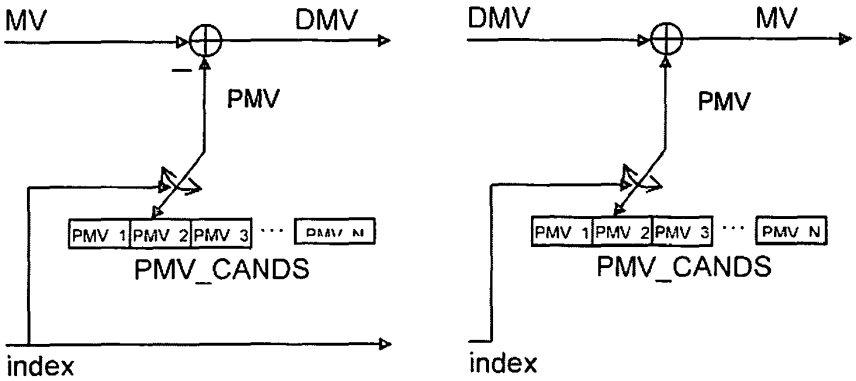

Figure 1 Motion vector coding with signalling of PMV index. Left: encoder, right: decoder.

3.1.1 Derivation of candidate predictor lists

3.1.1.1 Initialization and update of candidate lists

There are two major operations used for construction of PMV_CANDS lists, initialization and update.

Initialization means that a certain pre-defined state of the list is established. A PMV_CANDS list may be initialized e.g. as an empty list (zero entries) or as a list with one or more pre-defined entries such as the zero vector (0,0).

Amazon.com, Inc., Amazon.com Services LLC - Ex. 1012, 000005

Update means that one or more motion vectors are added to an existing PMV_CANDS list. A PMV_CANDS list may be updated according to previously coded motion vectors MV. At the encoder, when encoding a current block, PMV_CANDS may contain, besides any pre-defined initialization vectors, motion vectors that have been sent in previously encoded blocks in the video. By restricting the possible candidates in PMV_CANDS to pre-defined vectors and previously coded vectors, the decoder can derive the list PMV_CANDS in the same way as the encoder.

Alternatively, one or more motion vector candidates that have not been encoded previously may be added into the PMV_CANDS list at the encoder, and then those motion vectors will be explicitly signaled to the decoder for use with PMV_CANDS, such that PMV_CANDS can be updated in the same way both at the encoder and the decoder.

The PMV_CANDS list used for coding a motion vector MV associated with a current motion compensation block can be dynamically generated specifically for the current motion compensation block, i.e. without consideration of PMV_CANDS lists used for coding of MVs associated with motion compensation blocks previously coded. In that case, before a block is processed, a PMV_CANDS list is initialized and then updated with a number of previously coded or pre-defined motion vectors. Alternatively, a PMV_CANDS list may be initialized once (for example before the start of video encoding/decoder, or before a frame is processed or after a number of macroblocks have been encoded in a frame), and then used for coding of more than one motion vector, the advantage being that the possibly complex process of deriving the PMV_CANDS list would only have to be processed once for coding of a set of motion vectors. When being used for coding of more than one motion vector, the PMV_CANDS list may however be updated after coding one of the motion vectors. For example, the PMV_CANDS list may first be used for coding of a motion vector MV associated with a first motion compensation block, then PMV_CANDS may be updated using the vector MV (e.g. MV is added into the list), and then used for coding of a second motion compensation block. By subsequently updating PMV_CANDS with coded motion vectors, the list is updated according to a sliding window approach.

During encoding of a video, one or multiple PMV_CANDS lists may be maintained according to the sliding window approach, e.g. one for each frame type, one for each macroblock type, or one for each reference frame. When coding the two motion vectors associated with a bi-predicted motion compensation block, either a single or two different PMV_CANDS lists may be used.

3.1.1.2 Determining candidate motion vectors for list updates

Before a motion vector associated with a current motion compensation block is processed, the PMV_CANDS list used for coding the current motion vector may be updated by using motion vectors associated with surrounding blocks.

Amazon.com, Inc., Amazon.com Services LLC - Ex. 1012, 000006

The PMV_CANDS list may be updated such that motion vectors associated with close motion compensation blocks are inserted towards the beginning of the PMV_CANDS list (signaled with fewer bits), whereas motion vectors associated with more far away motion compensation blocks may be inserted towards the end of the PMV_CANDS list. Possible metrics to determine how far a motion compensation block is away from the current block include the Euclidian distance (dx^2+dy^2, where dx and dy and distances in x and y dimension, respectively), or the sum of absolute values (|dx|+|dy|). To this end, a spiral scan may be performed around the current block to obtain motion vectors to update PMV_CANDS. The scan may be terminated when all blocks of the current or a pre-defined number of subsequent frames (e.g. the last frame) have been scanned, or it may be terminated after a certain distance has been reached. Alternatively, the scan may be terminated as soon as a pre-defined number of unique motion vectors have been found. Note that sorting the list on distances can possibly be avoided in a spiral scan, by inserting unique vectors at the end of the PMV_CANDS list, the list is kept sorted with the spatially closest vector first in the list.

Motion vectors to be added to a PMV_CANDS list may comprise spatial or temporal neighbors of the current block, or combinations of spatial and/or temporal neighbors, e.g. a H.264/AVC-style median predictor derived based on spatially neighboring blocks.

As an alternative to consideration of a pre-defined neighborhood to scan for motion vector candidates, it may be signaled from encoder to decoder (and thus dynamically decided at the encoder), for each motion vector or for a set of motion vectors (e.g. a macroblock), whether the associated motion vectors are to be added to the PMV_CANDS list.

Out of a set of possible mechanisms for determining motion vector candidates, one or a combination of mechanisms may be dynamically decided at the encoder and the decision then signaled to the decoder.

3.1.1.3 Removing candidates from candidate lists

Limiting and/or reducing the number of candidates in PMV_CANDS can be helpful to reduce the overhead of signaling which PMV is used for motion vector prediction, since shorter lists require shorter code words. Additionally, restricting the addition of certain candidates can make room for other, more beneficial candidates to be added.

One measure for reducing the number of candidates is to avoid duplicate occurrences of the same motion vector in a given PMV_CANDS list. This can be done, when updating the list, by comparing the candidates already in the list with the new vector that is to be added, and if a duplicate is found, either removing the duplicate vector or skipping the new vector. This may likewise be done for motion vectors that are similar but not equal, such as pairs of motion vectors that have a similarity measure smaller than a pre-defined threshold, where similarity measures could be Euclidian distance (x0-x1)^2+(y0-y1)^2 or absolute distance |x0-x1|+|y0-y1|, with (x0,y0) and (x1,y1) being the pair of motion vectors under consideration. Rather than a straight distance measure, another approach is to look at the number of bits required to encode the distance between the motion vectors using a given encoding scheme.

Amazon.com, Inc., Amazon.com Services LLC - Ex. 1012, 000007

Also, the number of candidates in PMV_CANDS may be limited to a pre-defined or dynamically obtained number (see Section 3.1.2). When the number has been reached and an additional candidate is to be added, then the candidate at the end of the PMV_CANDS list may be removed (considering, as mentioned above, that the candidates in PMV_CANDS are sorted, and use of one of the candidates in PMV_CANDS is signaled such that the first candidate in the list is assigned the shortest code word among the candidates and that subsequent candidates in the list are assigned code words with non-decreasing length).

Alternatively, removal of candidates from a PMV_CANDS list may be signaled explicitly from the encoder to the decoder (and thus decided dynamically by the encoder), e.g. by sending a code for removal of a motion vector candidate from a list along with an identifier of the motion vector, e.g. an index.

3.1.1.4 Determining order of motion vector candidates in candidate list

As mentioned above, it is assumed that the candidates in PMV_CANDS are sorted, and use of one of the candidates in PMV_CANDS for prediction is signaled such that the first candidate in the list is assigned the shortest code word among the candidates and that subsequent candidates in the list are assigned code words with non-decreasing length. The following methods can be used when updating a PMV_CANDS list in order to sort the candidates in a way that is beneficial for overall coding efficiency.

- The motion vector associated with the last coded block is placed at the beginning of the list (shortest code word). Alternatively, a combined candidate such as a H.264/AVC median predictor (or alike) for the current block is placed at the beginning of the list. Combining this approach with dynamic adaptation of PMV_CANDS list size allows guaranteeing prediction performance of e.g. the H.264/AVC median predictor, since it is possible that PMV_CANDS list size is set to one, such that no bits need to be sent for index signaling (see Section 3.1.3).

- The candidates can be sorted according to frequency of occurrence of the candidate (or other candidates with e.g. Euclidian or absolute distance below a pre-defined threshold) in previously coded blocks, such that vectors that describe typical motion in a video frame or sequence are assigned short code words. Alternatively, if a duplicate of a new candidate is already in the list, then the duplicate can be removed, and the new vector added at the beginning of the list.

- It can further be useful to include weight with respect to motion compensation partition size, such that motion vectors with more weight are placed farther in the beginning of a PMV_CANDS list than those with lower weight. For instance, larger partitions could be trusted more than smaller partitions in the sense that the associated motion vectors may, depended on the coded sequence, more likely describe typical motion in that sequence. Thus motion vectors associated with larger partitions may be assigned more weight. Also, skip motion vectors may be trusted differently, e.g. assigned less weight, compared to non-skip motion vectors.

Amazon.com, Inc., Amazon.com Services LLC - Ex. 1012, 000008

Alternatively, resorting of a PMV_CANDS list may be signaled explicitly from the encoder to the decoder (and thus decided dynamically by the encoder), e.g. by sending a code for resorting of a motion vector candidate from a list along with an identifier of the motion vector to be moved, e.g. an index, and a signal about where to move that candidate.

3.1.1.5 Obtaining a motion vector candidate from a candidate list

At the time when a motion vector candidate is added to or obtained from a PMV_CANDS list (in the latter case, in order to use it for prediction), it may be modified according to a pre-defined method. Since modification at time of adding or obtaining is equivalent, it may without loss of generality be assumed that vectors are modified at the time of obtaining. Such modifications at the time of obtained may include:

- Scaling of a motion vector candidate according to the frame distance of the reference frame to which the motion vector candidate is applied for prediction. For example, assume a candidate motion vector MV(T-1)=(X,Y) in PMV_CANDS that has been applied for motion compensated prediction from a reference frame representing the video at time T-1, which is next to the current frame that is assumed to represent the video at time T. Now if this candidate is obtained from PMV_CANDS to be used for prediction of a motion vector pointing to a reference frame representing the video at time T-2 (two frames next to the current frame), then the motion vector magnitude can be scaled by a factor of 2, i.e. (2*X,2*Y). Also, if a candidate motion vector (X,Y) in the PMV_CANDS list refers to the video frame at T-2 is to be used for referencing the frame at T-1, the motion vector can be scaled to (X/2,Y/2). For both these cases we may end up duplicating a candidate motion vector in which case it can be removed. Scaling of candidate motion vectors is reasonable under the assumption of linear motion.

- Similarly, when obtaining a motion vector predictor MV(T-1)=(X,Y) in a B frame that represents time T, and that motion vector has been applied for motion compensated prediction from a left reference frame (time T-1), and now the predictor is to be used for prediction of a vector applied for motion compensated prediction from a right reference frame (time T+1), then the sign of the motion vector predictor is inverted, i.e. (-X,-Y).

3.1.2 Adaptation of candidate predictor list size

Limiting and/or reducing the number of candidates in PMV_CANDS can be helpful to reduce the overhead of signaling which PMV is used for motion vector prediction, since shorter lists require shorter code words. On the other hand, depending on video sequence characteristics, it may be beneficial to have a larger number of motion vector prediction candidates e.g. in order to save bits for DMV coding in case of irregular motion. The following methods can be used to adapt the size of PMV_CANDS list according to video sequence characteristics.

- The list size can be defined in the slice/frame/picture header or in a sequence-wide header (such as parameter set), i.e. signaled from the encoder to the decoder, and thus dynamically adapted by the encoder.

Amazon.com, Inc., Amazon.com Services LLC - Ex. 1012, 000009

- Candidates that have not been used for prediction during encoding of a number of previously coded blocks (according to a pre-defined threshold) can be removed from the list, thus reducing the list size.

- The list size may be adapted according to similarity of candidates in the list. For example, when updating a list with a motion vector MV, the numbers of candidates that are similar to MV (according to a distance measure such as Euclidian or absolute distance, with a pre-defined threshold) are counted. A high count indicates a high number of similar candidates and since it may not be necessary to have many similar candidates, at least one may be removed and the list size reduced. A low number of similar candidates on the other hand may indicate that it may be beneficial to have an additional candidate, thus the list size may be increased.

3.1.3 Signaling of candidate predictors

As mentioned above, it is assumed that the candidates in PMV_CANDS are sorted and use of one of the candidates in PMV_CANDS is signaled such that the first candidate in the list is assigned the shortest code word among the candidates and that subsequent candidates in the list are assigned code words with non-decreasing length. Such code words can be defined e.g. according to VLC tables. The VLC table used can depend on the maximum number of candidates in PMV_CANDS (the list size), as e.g. dynamically adapted according to the methods in Section 3.1.2. The table below presents some examples for VLC codes for different maximum list sizes. The left column shows the maximum list size, also denoted as C. In the right column, the VLC codes are shown along with indexes to address candidates in the PMV_CANDS list.

Table 1 Example VLC codes for different maximum list sizes.

Maximum list size C	Index: VLC code
1	0: - (unambiguous, no signaling necessary)
2	0: 0 1: 1
3	0: 1 1: 00 2: 01
4	0: 1 1: 00 2: 010 3: 011
5	0: 1 1: 00 2: 010 3: 0110 4: 0111
6	0: 1

Amazon.com, Inc., Amazon.com Services LLC - Ex. 1012, 000010

	1: 010 2: 011 3: 001 4: 0000 5: 0001
7	0: 1 1: 010 2: 011 3: 0010 4: 0011 5: 0000 6: 0001

For bi-predicted motion compensation blocks, two motion vectors are coded, and thus two motion vector prediction candidates can be necessary. In that case the candidate indexes for the two motion vectors can be coded together to further reduce the number of bits required for index coding. The following table shows an example for joint index coding, considering that both motion vectors use the same PMV_CANDS list, and that it is likely that both motion vectors use the same predictor in the PMV_CANDS list. Here idx0 and idx1 denoted the indexes for first and second predictor, respectively. VLC0(idx,C) denotes a VLC for an index "idx" according to Table 1 considering a maximum list size of C.

Table 2 VLC code for coding of two candidates indexes associated with bi-predicted block, C: maximum size of PMV_CANDS.

Case	**VLC code**
idx1<idx0	VLC0(idx0,C) 0 VLC0(idx1,C-1)
idx1=idx0	VLC0(idx0,C) 1
idx1>idx0	VLC0(idx0,C) 0 VLC0(idx1-1,C-1)

3.1.4 Removal of Unnecessary Candidates from list

It may happen that some candidates in the list will never be used, since choosing a candidate with a shorter codeword and encoding the distance will give a bit sequence that is shorter or of the same length compared for all possible motion vectors. In that case, they can be removed, thereby making the list shorter and the average bit length of each index shorter. As an alternative, it may be possible to instead insert more candidates. This way, the average bit length is kept the same, but the newly inserted candidate has a chance of being useful.

As an example, assume we have the following candidates:

Amazon.com, Inc., Amazon.com Services LLC - Ex. 1012, 000011

Value	Index	Code
(-1,2)	0	1
(13,4)	1	010
(12,3)	2	011
(0,2)	3	0010
(3,4)	4	0011
(-4,1)	5	0000
(4,8)	6	0001

Also, assume that we encode a difference (x_{diff}, y_{diff}) where x_{diff} and y_{diff} are encoded using Table ABC. If we want to encode a motion vector, such as (0,2), we can then encode it using candidate 3, which is (0,2), plus a difference of (0,0):

(0,2) + (0,0) = (0,2).

The index costs four bits, and each of the zeroes in the difference cost one bit, in total six bits.

However, we can also code the vector using index 0, plus a difference of (-1,0):

(-1,2) + (-1,0) = (0,2).

The index costs 1 bit, the -1 term in the difference costs three bits (see Table ABC below) and the zero costs one bit. Hence we get five bits in total, which is better than using index 3. It is easy to see given that the vector difference is coded using Table ABC below, that it will never be beneficial to use index 3, because using index 0 will always be one bit cheaper or better. Hence we can eliminate the candidate vector (0,2) and we get instead

Value	Index	Code
(-1,2)	0	1
(13,4)	1	010
(12,3)	2	011
(3,4)	4	001
(-4,1)	5	0000
(4,8)	6	0001

The only difference now is that the vector (3,4) has gotten a shorter code, it is now three bits instead of four. Hence we have gained from the elimination if the vector (3,4) is used, and never lost anything.

In the above example we removed the candidate with index 3, but it should be evident for a person skilled in the art that this is just an example. For instance, it may in some cases be beneficial to remove candidates 1 and 2 as well.

Sometimes it may not be possible to be sure to gain by removing a single candidate, but it may be possible if two or more candidates are eliminated simultaneously. Another possibility is that altering the order of the candidates or even adding a new candidate to the list can allow us to remove candidates that have now been rendered unnecessary, and therefore be beneficial regardless of the final motion vector to be encoded.

Amazon.com, Inc., Amazon.com Services LLC - Ex. 1012, 000012

Table ABC: The cost for sending the differential

Differential	Code
0	1
-1	010
1	011
-2	00100
2	00101
-3	00110
3	00111
-4	0001000
4	0001001
...	

3.1.5 Avoiding sending the sign bit

Sometimes it may be unnecessary to send the sign bit for the differential. That can then be avoided. Assume for example that we have the following list of candidates:

Value	Index	Code
(-1,2)	0	1
(13,8)	1	010
(3,4)	2	011
(11,3)	3	0010
(12,3)	4	0011
(1,2)	5	0000
(4,8)	6	0001

Assume that we want to encode a vector using candidate number 3 (11,3). Since candidate number 4 is to the right of it (having coordinates (12,3)), it is advantageous to encode it with candidate 4 instead if the x-coordinate is 12 or greater. As an example, the vector (15,2) can be encoded using candidate 3 as

(11,3) + (4,-1)

costing four bits for the index, seven bits for +4 and three bits for -1 (see table ABC), in total 14 bits. But it can also be encoded using candidate 4 as

(12,3) + (3,-1)

which costs four bits for the index, five bits for +3 and three bits for -1, in total 12 bits. Since candidate 4 will always be closer to any point in the right half-plane, it will be advantageous to choose candidate 4 for that. Likewise, it is better to choose candidate 3 if we are in the left half-plane (as seen from the point between (11,3) and (12,3)).

This means that it is unnecessary to specify the sign bit for the differential in the x-component, since it will always be negative for (11,3) and positive for (12,3). The sign bit is the last bit in Table ABC, except for 0 which does not have a sign bit. This means that if either candidate 3 or 4 will be selected, they will be one bit cheaper to encode than normally.

Amazon.com, Inc., Amazon.com Services LLC - Ex. 1012, 000013

The decoder will of course do the same analysis and avoid reading the sign bit if the above situation has occurred.

Even if the candidates are not exactly next to each other, or if they do not have exactly the same cost, it may be possible to avoid sending the sign bit, at least for one of the candidates. As an example, assume we want to encode a value using candidate 5. If the x-coordinate for the vector to encode is smaller than or equal to zero, it is always advantageous to instead use candidate 0, since it has a lower cost. This means that the sign bit for the x-coordinate does not have to be sent for candidate 5.

However, it may not be possible to remove the sign bit for the x-component for candidate 0. Since its index value is so inexpensive to code, it may be advantageous to choose it even if the vector to code is to the right of candidate 5.

If index 0 had the same cost as index 4, both candidates would be equally good to encode a vector with an x-coordinate of 0. However, we could decide to always use the lowest index in such cases, and thus still avoid sending the sign bit when index 4 is selected.

If the vectors are in the same row (as above), or indeed in the same column, it is possible to derive a general expression for when it is never useful to send the sign bit:

Assume that we have two candidates A = (Ax, Ay) and B = (Bx, By) on the same row (By = Ay) and that the distance between them is D so that Bx = Ax + D. In the following we will assume that D is positive, but a person skilled in the art will appreciate that it also works if we switch places for A and B.

Assume further that it is never more costly to transmit the index for candidate A than B, i.e., cost(A_index) <= cost(B_index), where cost(A_index) is the cost of transmitting the index associated with candidate A. Denote thet cost of sending the differential k in the x-direction cost_x(k). For instance, cost_x(-3) equals 5 according to Table ABC.

Now, if cost(A_index) - cost(B_index) + cost_x(D-1) - 3 <= 0, we do not have to send the sign bit for candidate B.

As an example, if A = (11,2), B = (13,3) and A_index is 1 and B_index is 0001, then D=2 and cost(A_index) - cost(B_index) + cost_x(D-1) - 3 equals 1 - 4 + 3 - 3 = -2 which is smaller than 0, hence we do not need to send the sign bit for B.

As an example we show this situation below, where coding using A is to the left and coding using B is to the right:

```
+---+---+---+---+---+---+---+---+---+---+---+---+
|   |   |   |   |9  |b  |d  |d  |£  |£  |£  |£  |
+---+---+---+---+---+---+---+---+---+---+---+---+
|   |   |   |   |9  |b c|d a|   |   |   |   |   |
+---+---+---+---+---+---+---+---+---+---+---+---+
|   |   |   |9  |7  |9 a|b 8|b  |   |   |   |   |
+---+---+---+---+---+---+---+---+---+---+---+---+
|   |   |   |9  |7  |9 a|b 8|b  |   |   |   |   |
+---+---+---+---+---+---+---+---+---+---+---+---+
|   |9  |9  |7  |5  |7 8|9 6|9 8|   |   |   |   |
```


Amazon.com, Inc., Amazon.com Services LLC - Ex. 1012, 000014

9	7	7	5 8	3 8	5 5	7 4	7 6	9 8	9 8	9	9
	9	9	7	5	7 8	9 6	9 8				
			9	7	9 a	b 8	b				
			9	7	9 a	b 8	b				
				9	b c	a					

3.1.6 Inexpensive coding of differentials

In one embodiment of the proposed solution, we use a maximum of four candidates in the list. However, in another embodiment, we use seven, and there is in principle no limit to the maximum. If we allow for a bigger maximum, the list can grow and chances increase that a suitable vector can be found. On the other hand, the number of bits needed to specify the candidate vector also increases. On top of that we get the problem that many vectors can be represented using several candidates, which is unnecessary. This redundant representation grows the more vectors are added.

One way to avoid this redundant representation is to restrict the number of vectors that it is possible to encode with each candidate vector. For example, it is possible to restrict a certain candidate so that it can only encode motion vectors that are exactly equal to the candidate, or differs in one step in one direction. This can be done by changing the way the differential is encoded.

Usually the differential is encoded using Table ABC, with separate encoding for x and y. Instead, we could use the following short table:

Differential	Code
(0,0)	1
(-1,0)	000
(0,-1)	001
(1,0)	010
(0,1)	011

This restricted coding of the differential could be employed for candidates above a certain index. For instance, all candidates with index 3 or higher could be encoded this way.

This has two advantages:

1. The encoding of the differential becomes very short, which is good since the cost of signaling index 3 or higher is quite high.
2. The candidate will not spend bits on covering motion vectors that would anyway be better encoded using some of the other candidate vectors. The redundancy problem described above is thereby ameliorated.

Amazon.com, Inc., Amazon.com Services LLC - Ex. 1012, 000015

3.2 Advantages of the Invention

The methods described in the invention improve coding efficiency for motion vector prediction schemes that use signaling of motion vector predictor.

4 Abbreviations

VLC	Variable length coding

5 References

[1] Sung Deuk Kim; Jong Beom Ra, "An efficient motion vector coding scheme based on minimum bitrateprediction", IEEE Trans. Image Proc., Volume 8, Issue 8, Aug 1999 Page(s):1117 – 1120.

[2] Joel Jung, Guillaume Laroche, "Competition-Based Scheme for Motion Vector Selection and Coding", VCEG-AC06, Klagenfurt, Austria, July 2006.

[3] US 2009/0129464 A1.

Amazon.com, Inc., Amazon.com Services LLC - Ex. 1012, 000016

Electronic Patent Application Fee Transmittal

Application Number:	
Filing Date:	
Title of Invention:	MOTION VECTOR CODING
First Named Inventor/Applicant Name:	Thomas Rusert
Filer:	Steven Ware Smith/Jennifer Hardin
Attorney Docket Number:	P31108-US1

Filed as Large Entity

Provisional Filing Fees

Description	Fee Code	Quantity	Amount	Sub-Total in USD($)
Basic Filing:				
Provisional application filing	1005	1	220	220
Pages:				
Claims:				
Miscellaneous-Filing:				
Petition:				
Patent-Appeals-and-Interference:				
Post-Allowance-and-Post-Issuance:				
Extension-of-Time:				

Description	Fee Code	Quantity	Amount	Sub-Total in USD($)
Miscellaneous:				
			Total in USD ($)	**220**

Electronic Acknowledgement Receipt

EFS ID:	6956052
Application Number:	61301649
International Application Number:	
Confirmation Number:	8568
Title of Invention:	MOTION VECTOR CODING
First Named Inventor/Applicant Name:	Thomas Rusert
Customer Number:	27045
Filer:	Steven Ware Smith/Jennifer Hardin
Filer Authorized By:	Steven Ware Smith
Attorney Docket Number:	P31108-US1
Receipt Date:	05-FEB-2010
Filing Date:	
Time Stamp:	08:54:19
Application Type:	Provisional

Payment information:

Submitted with Payment	yes
Payment Type	Deposit Account
Payment was successfully received in RAM	$220
RAM confirmation Number	4795
Deposit Account	501379
Authorized User	

File Listing:

Document Number	Document Description	File Name	File Size(Bytes)/ Message Digest	Multi Part /.zip	Pages (if appl.)

1		P31108-US1_2010-02-05_10-xxxx_Provisional_Application.pdf	723262 c0e5e844e2371d2889db4e8f9e379835f685f35a	yes	16
	Multipart Description/PDF files in .zip description				
	Document Description		**Start**	**End**	
	Provisional Cover Sheet (SB16)		1	2	
	Specification		3	16	
Warnings:					
Information:					
2	Fee Worksheet (PTO-875)	fee-info.pdf	29539 6ad9453e516f3b9fd0abe905f5cb6cdd5281ea2e	no	2
Warnings:					
Information:					
		Total Files Size (in bytes):	752801		

This Acknowledgement Receipt evidences receipt on the noted date by the USPTO of the indicated documents, characterized by the applicant, and including page counts, where applicable. It serves as evidence of receipt similar to a Post Card, as described in MPEP 503.

<u>New Applications Under 35 U.S.C. 111</u>
If a new application is being filed and the application includes the necessary components for a filing date (see 37 CFR 1.53(b)-(d) and MPEP 506), a Filing Receipt (37 CFR 1.54) will be issued in due course and the date shown on this Acknowledgement Receipt will establish the filing date of the application.

<u>National Stage of an International Application under 35 U.S.C. 371</u>
If a timely submission to enter the national stage of an international application is compliant with the conditions of 35 U.S.C. 371 and other applicable requirements a Form PCT/DO/EO/903 indicating acceptance of the application as a national stage submission under 35 U.S.C. 371 will be issued in addition to the Filing Receipt, in due course.

<u>New International Application Filed with the USPTO as a Receiving Office</u>
If a new international application is being filed and the international application includes the necessary components for an international filing date (see PCT Article 11 and MPEP 1810), a Notification of the International Application Number and of the International Filing Date (Form PCT/RO/105) will be issued in due course, subject to prescriptions concerning national security, and the date shown on this Acknowledgement Receipt will establish the international filing date of the application.

UNITED STATES PATENT AND TRADEMARK OFFICE

UNITED STATES DEPARTMENT OF COMMERCE
United States Patent and Trademark Office
Address: COMMISSIONER FOR PATENTS
P.O. Box 1450
Alexandria, Virginia 22313-1450
www.uspto.gov

APPLICATION NUMBER	FILING or 371(c) DATE	GRP ART UNIT	FIL FEE REC'D	ATTY.DOCKET.NO	TOT CLAIMS	IND CLAIMS
61/301,649	02/05/2010		220	P31108-US1		

CONFIRMATION NO. 8568

FILING RECEIPT

OC000000040185753

27045
ERICSSON INC.
6300 LEGACY DRIVE
M/S EVR 1-C-11
PLANO, TX 75024

Date Mailed: 02/23/2010

Receipt is acknowledged of this provisional patent application. It will not be examined for patentability and will become abandoned not later than twelve months after its filing date. Any correspondence concerning the application must include the following identification information: the U.S. APPLICATION NUMBER, FILING DATE, NAME OF APPLICANT, and TITLE OF INVENTION. Fees transmitted by check or draft are subject to collection. Please verify the accuracy of the data presented on this receipt. **If an error is noted on this Filing Receipt, please submit a written request for a Filing Receipt Correction. Please provide a copy of this Filing Receipt with the changes noted thereon. If you received a "Notice to File Missing Parts" for this application, please submit any corrections to this Filing Receipt with your reply to the Notice. When the USPTO processes the reply to the Notice, the USPTO will generate another Filing Receipt incorporating the requested corrections**

Applicant(s)

Thomas Rusert, Aachen, GERMANY;
Rickard Sjöberg, Stockholm, SWEDEN;
Jacob Ström, Stockholm, SWEDEN;
Per Wennersten, Arsta, SWEDEN;
Kenneth Andersson, Gavle, SWEDEN;

Power of Attorney:
Sidney Weatherford--45602

If Required, Foreign Filing License Granted: 02/19/2010
The country code and number of your priority application, to be used for filing abroad under the Paris Convention, is **US 61/301,649**
Projected Publication Date: None, application is not eligible for pre-grant publication
Non-Publication Request: No
Early Publication Request: No
Title

MOTION VECTOR CODING

PROTECTING YOUR INVENTION OUTSIDE THE UNITED STATES

Since the rights granted by a U.S. patent extend only throughout the territory of the United States and have no effect in a foreign country, an inventor who wishes patent protection in another country must apply for a patent in a specific country or in regional patent offices. Applicants may wish to consider the filing of an international application under the Patent Cooperation Treaty (PCT). An international (PCT) application generally has the same

Amazon.com, Inc., Amazon.com Services LLC - Ex. 1012, 000021

effect as a regular national patent application in each PCT-member country. The PCT process **simplifies** the filing of patent applications on the same invention in member countries, but **does not result** in a grant of "an international patent" and does not eliminate the need of applicants to file additional documents and fees in countries where patent protection is desired.

Almost every country has its own patent law, and a person desiring a patent in a particular country must make an application for patent in that country in accordance with its particular laws. Since the laws of many countries differ in various respects from the patent law of the United States, applicants are advised to seek guidance from specific foreign countries to ensure that patent rights are not lost prematurely.

Applicants also are advised that in the case of inventions made in the United States, the Director of the USPTO must issue a license before applicants can apply for a patent in a foreign country. The filing of a U.S. patent application serves as a request for a foreign filing license. The application's filing receipt contains further information and guidance as to the status of applicant's license for foreign filing.

Applicants may wish to consult the USPTO booklet, "General Information Concerning Patents" (specifically, the section entitled "Treaties and Foreign Patents") for more information on timeframes and deadlines for filing foreign patent applications. The guide is available either by contacting the USPTO Contact Center at 800-786-9199, or it can be viewed on the USPTO website at http://www.uspto.gov/web/offices/pac/doc/general/index.html.

For information on preventing theft of your intellectual property (patents, trademarks and copyrights), you may wish to consult the U.S. Government website, http://www.stopfakes.gov. Part of a Department of Commerce initiative, this website includes self-help "toolkits" giving innovators guidance on how to protect intellectual property in specific countries such as China, Korea and Mexico. For questions regarding patent enforcement issues, applicants may call the U.S. Government hotline at 1-866-999-HALT (1-866-999-4158).

LICENSE FOR FOREIGN FILING UNDER

Title 35, United States Code, Section 184

Title 37, Code of Federal Regulations, 5.11 & 5.15

GRANTED

The applicant has been granted a license under 35 U.S.C. 184, if the phrase "IF REQUIRED, FOREIGN FILING LICENSE GRANTED" followed by a date appears on this form. Such licenses are issued in all applications where the conditions for issuance of a license have been met, regardless of whether or not a license may be required as set forth in 37 CFR 5.15. The scope and limitations of this license are set forth in 37 CFR 5.15(a) unless an earlier license has been issued under 37 CFR 5.15(b). The license is subject to revocation upon written notification. The date indicated is the effective date of the license, unless an earlier license of similar scope has been granted under 37 CFR 5.13 or 5.14.

This license is to be retained by the licensee and may be used at any time on or after the effective date thereof unless it is revoked. This license is automatically transferred to any related applications(s) filed under 37 CFR 1.53(d). This license is not retroactive.

The grant of a license does not in any way lessen the responsibility of a licensee for the security of the subject matter as imposed by any Government contract or the provisions of existing laws relating to espionage and the national security or the export of technical data. Licensees should apprise themselves of current regulations especially with

respect to certain countries, of other agencies, particularly the Office of Defense Trade Controls, Department of State (with respect to Arms, Munitions and Implements of War (22 CFR 121-128)); the Bureau of Industry and Security, Department of Commerce (15 CFR parts 730-774); the Office of Foreign AssetsControl, Department of Treasury (31 CFR Parts 500+) and the Department of Energy.

NOT GRANTED

No license under 35 U.S.C. 184 has been granted at this time, if the phrase "IF REQUIRED, FOREIGN FILING LICENSE GRANTED" DOES NOT appear on this form. Applicant may still petition for a license under 37 CFR 5.12, if a license is desired before the expiration of 6 months from the filing date of the application. If 6 months has lapsed from the filing date of this application and the licensee has not received any indication of a secrecy order under 35 U.S.C. 181, the licensee may foreign file the application pursuant to 37 CFR 5.15(b).

Amazon.com, Inc., Amazon.com Services LLC - Ex. 1012, 000023