Trials@uspto.gov
571-272-7822

Paper 7
Date: April 21, 2025

UNITED STATES PATENT AND TRADEMARK OFFICE

BEFORE THE PATENT TRIAL AND APPEAL BOARD

INTEGRATED DNA TECHNOLOGIES, INC.,
Petitioner,

v.

TECAN GENOMICS, INC.,
Patent Owner.

IPR2024-01504
Patent 11,098,357 B2

Before ZHENYU YANG, JAMES A. WORTH, and
TIMOTHY G. MAJORS, *Administrative Patent Judges.*

WORTH, *Administrative Patent Judge*.

DECISION
Granting Institution of *Inter Partes* Review
35 U.S.C. § 314

I. INTRODUCTION

A. Background and Summary

Integrated DNA Technologies, Inc. ("Petitioner") filed a Petition (Paper 1, "Pet.") requesting *inter partes* review of claims 1–4, 6, 7, 9 and 10 of U.S. Patent No. 11,098,357 B2 (Ex. 1004, "the '357 patent"). Tecan Genomics, Inc. ("Patent Owner") filed a Preliminary Response (Paper 6, "Prelim. Resp.").

In support of its challenges, Petitioner relies, *inter alia*, on the declaration of Peter A. Sims, Ph.D. Ex. 1079.

Institution of an *inter partes* review is authorized by statute when "the information presented in the petition filed under [35 U.S.C. §] 311 and any response filed under [35 U.S.C. §] 313 shows that there is a reasonable likelihood that the petitioner would prevail with respect to at least 1 of the claims challenged in the petition." 35 U.S.C. § 314(a) (2018).

For the reasons set forth below, we determine that Petitioner has demonstrated that there is a reasonable likelihood that at least one of claims 1–4, 6, 7, 9, and 10 of the '357 patent is unpatentable, and we institute an *inter partes* review of claims 1–4, 6, 7, 9, and 10 based on the grounds set forth in the Petition.

B. Real Parties-in-Interest

Petitioner identifies "Integrated DNA Technologies, Inc., and its corporate parent, Danaher Corporation," as real parties-in-interest. Pet. 73.

Patent Owner identifies "Tecan Group AG (also known as Tecan Group Ltd.)" as a real-party-in-interest. Paper 4, 1.

C. Related Matters

The parties indicate that the '357 patent has been asserted in the following district court litigation: *Tecan Genomics, Inc. v. Invitae Corp.*,

C.A. No. 23-cv-1114-GBW (D. Del.). Pet. 73; Paper 4, 1. Petitioner also cites *Tecan Genomics, Inc. v. QIAGEN Sciences, LLC*, C.A. No. 23-cv-1115-GBW (D. Del.) as a related matter because it involves patents in the same family as the '357 patent. Pet. 73.

The parties indicate that Petitioner submitted petitions for *inter partes* review of U.S. Patent No. 9,546,399 in IPR2024-01502 and U.S. Patent No. 11,725,241 in IPR2024-01506. Pet. 73; Paper 4, 1. Patent Owner also states that Petitioner submitted petitions for *inter partes* review of U.S. Patent No. 10,036,012 in IPR2025-00015 and for U.S. Patent No. 10,876,108 in IPR2025-00016. Paper 4, 1.

Patent Owner also states that QIAGEN Sciences, LLC, submitted a Petition for *inter partes* review of the '357 patent (IPR2025-00026), the '241 patent (IPR2025-00027), the '012 patent (IPR2025-00028), and the '108 patent (IPR2025-00028). *Id.*

D. The '357 Patent

The '357 patent is titled "Compositions and Methods for Identification of a Duplicate Sequencing Read" and issued on August 24, 2021. Ex. 1004, codes (45), (54). It issued from an application filed January 15, 2020 and claims priority to a provisional application filed on November 13, 2013. *Id.* at codes (21), (22), (60).

The '357 patent "relates generally to the field of high throughput sequencing reactions and the ability to discern artifacts arising through sequence duplications from nucleotide molecules that are unique molecules." *Id.* at 1:27–30. The '357 patent explains that PCR duplicate artifacts may occur in RNA sequencing applications during library amplification, which hampers accurate gene expression measurements. *Id.* at 1:35–37. The '357 patent also states that paired end sequencing adds cost

in expression analysis studies. *See id.* at 1:56–62. In view of this, the '357 patent expresses a need for improved methods of "low-cost, high throughput sequencing of regions of interest, genotyping or simple detection of RNA transcripts without inherent instrument inefficiencies that drive up sequencing costs due to the generation of unusable or non-desired data reads." *Id.* at 1:65–2:3.

The '357 patent states that it is based on methods for discerning "duplicate sequencing reads from a population of sequencing reads." *Id.* at 2:15–17. The method includes "ligating an adaptor to a 5′ end of each nucleic acid fragment of a plurality of nucleic acid fragments from one or more samples, wherein the adaptor comprises an indexing primer binding site, an indexing site, an identifier site, and a target sequence primer binding site." *Id.* at 2:24–29. The '357 patent describes an embodiment in which "the identifier site is between 1 and 8 nucleotides in length." *Id.* at 2:62–64. The '357 patent explains that "[t]he ligated adaptor-nucleic acid fragment products can be amplified, thus generating a population of sequencing reads from the amplified adaptor-nucleic acid ligation products." *Id.* at 2:29–32. In addition, "[t]he sequencing reads with a duplicate identifier site and target sequence can then be detected from the population of sequencing reads." *Id.* at 2:29–34.

E. Illustrative Claim

Claim 1, reproduced below, is the sole independent challenged claim and is illustrative of the subject matter:

> 1. A method for detecting duplicate sequencing reads, the method comprising:
>
> ligating an adaptor to each of a plurality of nucleic acid fragments, wherein each adaptor comprises a unique identifier having from about 1 to about 8 nucleotides; an

indexing site unique to a subset of the adaptors, and a primer binding site;

amplifying the adaptor-ligated fragments into amplicons;

sequencing the amplicons to produce sequence reads that include identifier and target sequences; and

identifying sequence reads with identical identifier and target sequences as duplicates.

Ex. 1001, 25:36–47.

F. Prior Art and Asserted Grounds

Petitioner asserts that claims 1–4, 6, 7, 9, and 10 of the '357 patent is unpatentable on the following grounds (Pet. 26):

Claim(s) Challenged	35 U.S.C. §	Reference(s)/Basis
1–4, 6, 7, 9, 10	103	Iafrate,[1] Kivioja[2]
1–4, 6, 7, 10	102	Bielas[3]
1–4, 6, 7, 9, 10	103	Bielas

II. ANALYSIS

A. Legal Standards

A "prior art reference—in order to anticipate under 35 U.S.C. § 102—must not only disclose all elements of the claim within the four corners of the document, but must also disclose those elements 'arranged as in the claim.'" *Net MoneyIN, Inc. v. VeriSign, Inc.*, 545 F.3d 1359, 1369 (Fed. Cir. 2008) (quoting *Connell v. Sears, Roebuck & Co.*, 722 F.2d 1542, 1548 (Fed.

[1] U.S. Patent Application Publication No. 2013/0303461 A1, published November 14, 2013 (Ex. 1011) ("Iafrate").
[2] Kivioja et al., *Counting absolute numbers of molecules using unique molecular identifiers*, 9(1) Nature Methods 72 (dated Jan. 2012 and published online Nov. 20, 2011) (Ex. 1012) ("Kivioja").
[3] International Patent Application Publication No. WO 2013/123442 A1, published August 22, 2013 (Ex. 1013) ("Bielas").

Cir. 1983)). "A single prior art reference may anticipate without disclosing a feature of the claimed invention if such feature is necessarily present, or inherent, in that reference." *Allergan, Inc. v. Apotex Inc.*, 754 F.3d 952, 958 (Fed. Cir. 2014).

"[A]nticipation by inherent disclosure is appropriate only when the [single prior art] reference discloses prior art that must *necessarily* include the unstated limitation." *Transclean Corp. v. Bridgewood Servs., Inc.*, 290 F.3d 1364, 1373 (Fed. Cir. 2002) (citation omitted). "Inherency . . . may not be established by probabilities or possibilities. The mere fact that a certain thing *may* result from a given set of circumstances is not sufficient." *Cont'l Can Co. USA, Inc. v. Monsanto Co.*, 948 F.2d 1264, 1269 (Fed. Cir. 1991) (internal quotation marks and citations omitted). Rather, "[t]he inherent result must inevitably result from the disclosed steps." *In re Montgomery*, 677 F.3d 1375, 1380 (Fed. Cir. 2012).

A patent claim is unpatentable under 35 U.S.C. § 103 if the differences between the claimed subject matter and the prior art are such that the subject matter, as a whole, would have been obvious at the time the invention was made to a person having ordinary skill in the art to which said subject matter pertains. 35 U.S.C. § 103; *KSR Int'l Co. v. Teleflex Inc.*, 550 U.S. 398, 406 (2007). "[W]hen a patent claims a structure already known in the prior art that is altered by the mere substitution of one element for another known in the field, the combination must do more than yield a predictable result." *KSR*, 550 U.S. at 416 (citing *United States v. Adams*, 383 U.S. 39, 50–51 (1966)). The question of obviousness is resolved based on underlying factual determinations including: (1) the scope and content of the prior art; (2) any differences between the claimed subject matter and the

prior art; (3) the level of ordinary skill in the art; and (4) objective evidence of non-obviousness. *Graham v. John Deere Co.*, 383 U.S. 1, 17–18 (1966).

In an *inter partes* review, a petition must identify "with particularity, each claim challenged, the grounds on which the challenge to each claim is based, and the evidence that supports the grounds for the challenge to each claim." 35 U.S.C. § 312(a)(3) (2018); *see also* 37 C.F.R. § 42.104(b) (2024) (requiring a petition for *inter partes* review to identify how the challenged claim is to be construed and where each element of the claim is found in the prior art patents or printed publications relied upon).

B. Level of Ordinary Skill in the Art

In determining the level of ordinary skill in the art, various factors may be considered, including the "type of problems encountered in the art; prior art solutions to those problems; rapidity with which innovations are made; sophistication of the technology; and educational level of active workers in the field." *In re GPAC, Inc.*, 57 F.3d 1573, 1579 (Fed. Cir. 1995) (quoting *Custom Accessories, Inc. v. Jeffrey-Allan Indus., Inc.*, 807 F.2d 955, 962, (Fed. Cir. 1986)). Furthermore, the prior art itself can reflect the appropriate level of ordinary skill in the art. *Okajima v. Bourdeau*, 261 F.3d 1350, 1355 (Fed. Cir. 2001).

Petitioner asserts that "[b]ecause the '357 patent is directed to library preparation and data interpretation methods for NGS [next generation sequencing], the POSA could have had academic training in any of a variety of fields that used NGS, including chemistry, molecular biology, biochemistry, or medicine." Pet. 21 (citing Ex. 1079 ¶¶ 184–186, 190). According to Petitioner, one of ordinary skill in the art "would have a PhD or equivalent training in one of those fields and several years of work experience (or commensurately less education and more work experience)."

Id. (citing Ex. 1079 ¶¶ 184–186). Petitioner contends that a person of ordinary skill in the art "further would have had specific experience with implementing and designing library preparation methods for Illumina, the leading NGS platform in 2013" and "[t]his would have included specific experience with, and understanding of, the sequences contained in adaptors for Illumina sequencing at the priority date, and the chemistry used to attach those adaptors to DNA fragments prior to sequencing." *Id.* at 21–22 (citing Ex. 1079 ¶¶ 184–186).

Patent Owner asserts that "Petitioner proposes a level of skill in the art that does not accurately reflect the level of ordinary skill in the art as of November 2013, the priority date of the '357 Patent." Prelim. Resp. 7. Specifically, Patent Owner argues that "Petitioner's definition of a person of ordinary skill in the art ('POSA') requires that 'the POSA would have a PhD or equivalent training in one of those fields and several years of work experience (or commensurately less education and more work experience).'" *Id.* According to Patent Owner:

> Petitioner's definition goes beyond the level of ***ordinary*** skill in the art. The sequencing methods described in the '357 patent do not require a Ph.D. plus several years of work experience to understand and perform. In fact, in many laboratory environments, lab technicians and graduate students perform DNA sequencing methods. The level of education for a POSA, therefore, is more appropriately a Ph.D. in a field related to molecular biology, or a B.S. or M.S. degree with three to five years of experience working in a molecular biology lab.

Id.

Patent Owner also disputes the experience Petitioner asserts for one of ordinary skill in the art. *Id.* at 8–9. Specifically, Patent Owner argues that "[t]his level of skill inappropriately requires the POSA to be an *inventor* of

library preparation methods, which is far above 'ordinary skill.'" *Id.* at 8. According to Patent Owner, one of ordinary skill "would have had experience with DNA sequencing methods and a working knowledge of how these sequencing methods functioned." *Id.*

On this preliminary record, we agree with Patent Owner that Petitioner's asserted level of ordinary skill in the art is higher than warranted when Petitioner argues that a person of ordinary skill "further would have had specific experience with implementing and designing library preparation methods." Pet. 21–22. However, we disagree with Patent Owner that a POSA only need to "have had experience with DNA sequencing methods" (Prelim. Resp. 8) because an artisan with experience with only pre-NGS sequencing methods would not qualify as a person of ordinary skill.

Instead, for purposes of this Decision, we find a person of ordinary skill would have had a Ph.D. in the field of chemistry, molecular biology, or biochemistry. Alternatively, a POSA would have had a B.S. or M.S. degree with three to five years of experience working in any of those fields. The person of ordinary skill would have had experience with NGS sequencing methods and a working knowledge of how those methods functioned. This definition of a person of ordinary skill is consistent with the skill level reflected in the disclosures of the '357 patent and prior art. We further note that neither aspect of the dispute over the skill level affects our decision to institute review.

C. Claim Construction

We construe each claim "in accordance with the ordinary and customary meaning of such claim as understood by one of ordinary skill in the art and the prosecution history pertaining to the patent." 37 C.F.R. § 42.100(b) (2024). Under this standard, claim terms are generally given

their plain and ordinary meaning as would have been understood by a person of ordinary skill in the art at the time of the invention and in the context of the entire patent disclosure. *Phillips v. AWH Corp.*, 415 F.3d 1303, 1313 (Fed. Cir. 2005) (*en banc*). In some cases, the patentee may serve as its own lexicographer. *Grace Instrument Industries, LLC v. Chandler Instruments Co. LLC*, 57 F.4th 1001, 1010 (Fed. Cir. 2023) (*quoting Phillips*, 415 F.3d at 1316).

Petitioner proposes constructions of the terms "indexing site" and "identifier site." Pet. 22–23. Patent Owner does not disagree with Petitioner's proposed constructions, but simply argues that none of the terms need to be construed beyond their plain and ordinary meaning. Prelim. Resp. 9. We construe these terms below, and also highlight that the parties may further address the construction of "identifying sequence reads with identical identifier and target sequences as duplicates" and "comprising" after institution.

1. "indexing site"

Petitioner argues that the '357 patent defines "indexing site" as a sample index, specifically, "a nucleic acid sequence that acts as an index for multiple polynucleotide samples, thus allowing for the samples to be pooled together into a single sequencing run, which is known as multiplexing." Pet. 23 (citing Ex. 1004, 4:40–44). Patent Owner does not disagree other than to argue that no claim requires construction.

The '357 patent states:

> An indexing site is a nucleic acid sequence that acts as an index for multiple polynucleotide samples, thus allowing for the samples to be pooled together into a single sequencing run, which is known as multiplexing.

Ex. 1004, 4:40–44. We understand this passage of the '357 patent to provide a definition for "indexing site," and we construe the term in accordance therewith.

2. "identifier site"

Petitioner argues that the '357 patent defines "identifier site" as a molecular tag attached to fragments prior to amplification, specifically, "a nucleic acid sequence that comprises random bases and is used to identify duplicate sequencing reads." Pet. 22 (citing Ex. 1004, 4:49–51). Petitioner argues that an "identifier site" "can be designed as a set of sequences, or it can be semi-random, or it can be completely random." *Id.* (citing Ex. 1004, 4:55–57). Petitioner argues that an "identifier site" can also "be a fixed length, or it can be a variable length." *Id.* at 22–23 (citing Ex. 1004, 4:57–58).

Patent Owner does not disagree other than to argue that no claim requires construction.

The '357 patent states: "An identifier site is a nucleic acid sequence that comprises random bases and is used to identify duplicate sequencing reads." Ex. 1004, 4:49–51. We understand this passage of the '357 patent to provide a definition for "identifier site," and we construe the term in accordance therewith.

3. "identifying sequence reads with identical identifier and target sequences as duplicates"

Although the parties do not request construction of this limitation, we note that the parties may wish to address the construction of this limitation after institution. *See Vivid Techs., Inc. v. Am. Sci. & Eng'g, Inc.*, 200 F.3d 795, 803 (Fed. Cir. 1999) (claims are construed only to the extent necessary

to resolve a dispute). For example, the parties may wish to address whether the term "duplicates" means that the sequences are identical. We observe that the '357 patent states: "A duplicate sequencing read can be a sequencing read with the same identifier site and target sequence as another sequencing read in the population of sequencing reads." Ex. 1004, 4:12–15. The claim does not use the exact wording as the Specification.[4]

The '357 patent states that, when analyzing RNA sequence data, and when two or more identical sequences are found, "it can be difficult to know if these represent unique cDNA molecules derived independently from different RNA molecules, or if they are PCR duplicates derived from a single RNA molecule." Ex. 1004, 1:37–42.[5]

The '357 patent distinguishes between "apparent duplicates" and "true duplicates" as follows:

> In some embodiments, duplicate sequencing reads are differentiated from one another as being true duplicates versus apparent or perceived duplicates. Apparent or perceived duplicates may be identified from sequencing libraries and using conventional measures of duplicate reads (i.e., reads were mapped using bowtie), where all reads with the same start and end nucleic acid coordinates were counted as duplicates. True duplicates may be identified from sequencing libraries having

---

[4] The parties may also comment on whether this limitation in the independent claim at issue in this proceeding has the same meaning as the corresponding limitations in the independent claims at issue in IPR2024-01502 and -1506. *Cf.* Ex. 1003 (claim 1 of U.S. Patent No. 9,546,399, i.e., "identifying a duplicate sequencing read as the sequencing read comprising the same identifier site and nucleic acid fragment as another sequencing read in the population of sequencing reads"); Ex. 1005 (claim 1 of U.S. Patent No. 11,725,241, i.e., "identifying sequence reads with identical identifier and target sequences as duplicates").

[5] The discussion of the '357 patent here tracks the discussion of the '241 patent in IPR2024-01506.

> had an identifier site introduced through ligation to differentiate between fragments of DNA that randomly have the same start and end mapping coordinates.

Ex. 1004, 14:21–31; *see also id.* Fig. 5.

The '357 patent also discloses in Example 5: "Any read that has identical sequence to any other read is identified as a duplicate and removed from the population, thus, only a single copy is retained within the file." Ex. 1004, 20:60–62.

The parties may address whether "duplicates" in claim 1 of the '357 patent means the sequences possess an identical sequence. We note that there is an error rate associated with amplification and sequencing. *See, e.g.*, Ex. 1079 ¶¶ 113, 117, 456.

4. "comprising"

The parties may address the meaning of the transitional phrase "comprising" and whether the prior art meets the claim if the prior art discloses a method of identifying as duplicates those sequence reads with identical labels and target fragments and, in addition also identifies other sequence reads as duplicates, including sequence reads with some mutations resulting from PCR or SBS error. *See* Ex. 1079 ¶ 117. On this preliminary record, we construe "comprising" as an open-ended transition that is not limited to the listed steps. *See Vivid Techs., Inc.*, 200 F.3d at 811.

D. Alleged Obviousness of Claims 1–4, 6, 7, 9, and 10 over Iafrate and Kivioja

Petitioner contends that claims 1–4, 6, 7, 9, and 10 would have been obvious over Iafrate and Kivioja. Pet. 24–47. Patent Owner disagrees. *See* Prelim. Resp. 10–16.

1. Iafrate

Iafrate is a U.S. Patent Application Publication titled "Methods for Determining a Nucleotide Sequence." Ex. 1011, code (54). More specifically, Iafrate is "directed to methods of determining oligonucleotide sequences, e.g. by enriching target sequences prior to sequencing the sequences." *Id.* at code (57).

Iafrate describes a method that includes:

> . . .(a) ligating a target nucleic acid comprising the known target nucleotide sequence with a universal oligonucleotide tail-adaptor; (b) amplifying a portion of the target nucleic acid and the amplification strand of the universal oligonucleotide tail-adaptor with a first adaptor primer and a first target-specific primer; (c) amplifying a portion of the amplicon resulting from step (b) with a second adaptor primer and a second target-specific primer; [and] (d) sequencing the amplified portion from step (c) using a first and second sequencing primer.

Id. ¶ 7. Iafrate also discloses embodiments in which "the universal oligonucleotide tail-adaptor can further comprise a barcode portion." *Id.* ¶ 13.

Iafrate's Figure 9, which shows "schematics of illustrative universal oligonucleotide tail-adaptors (SEQ ID NOS 45-48, respectively, in order of appearance)," is reproduced below. *Id.* ¶ 33.

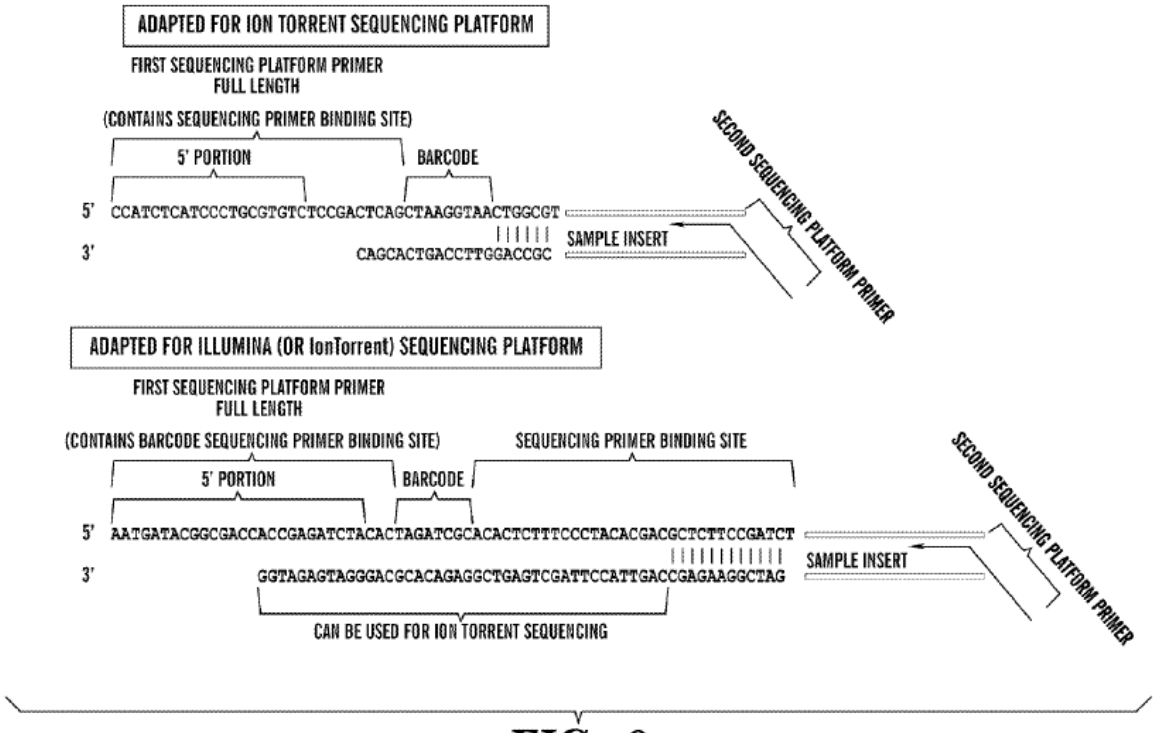

FIG. 9

2. Kivioja (Ex. 1012)

Kivioja is a journal article titled "Counting absolute numbers of molecules using unique molecular identifiers." Ex. 1012, 1. Kivioja explains that "[c]ounting individual RNA or DNA molecules is difficult because they are hard to copy quantitatively for detection." *Id.* In view of this, Kivioja describes applying "unique molecular identifiers (UMIs), which make each molecule in a population distinct, to genome-scale human karyotyping and mRNA sequencing in *Drosophila melanogaster*." *Id.* According to Kivioja, "this method can improve accuracy of almost any next-generation sequencing method, including chromatin immunoprecipitation–sequencing, genome assembly, diagnostics and manufacturing-process control and monitoring." *Id.*

In Kivioja's method, "each molecule in a population is first made unique," which "can be accomplished by adding a random DNA sequence

label, by fragmenting or by taking an aliquot of a complex mixture that is small enough to contain only distinct molecules." *Id.*[6] According to Kivioja, "[a]ny combination of these manipulations can be used to generate a library in which each molecule has a distinct identifying sequence." *Id.*

Kivioja's Figure 1(a) is reproduced below.

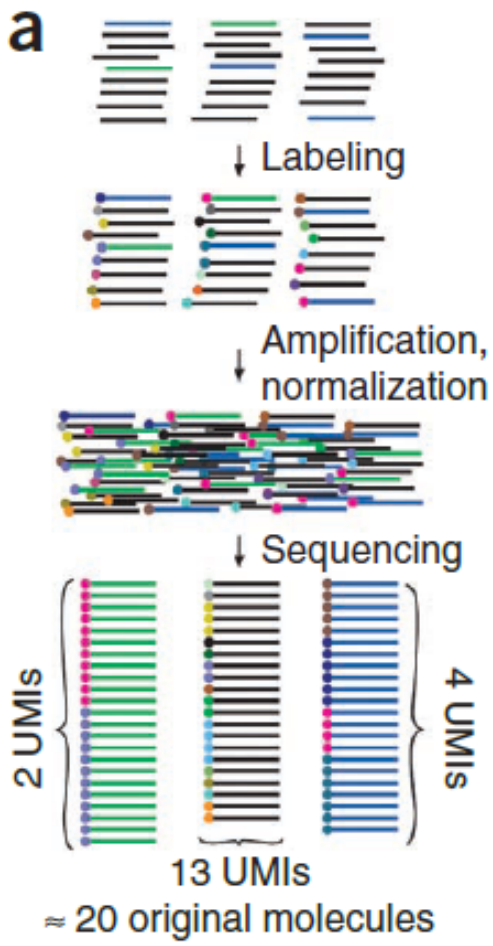

Kivioja describes Figure 1(a) as follows:

> Three different DNA species (green, blue and black lines) are labeled with a collection of random labels (colored filled circles). Two green molecules are originally present (top), corresponding to two different UMIs (red, blue) among the sequenced

[6] The parties may wish to address whether there is a difference between a molecular tag and a label.

> molecules (green; bottom). Information about the original number of molecules (top) is preserved in the number of different UMIs detected by sequencing a sample of the amplified and normalized library (bottom). Even if some UMIs are not observed, the original number of molecules can be estimated using count statistics.

Id.

Kivioja states that a labeling protocol for counting cellular mRNA molecules was also tested. Ex. 1012, 2–3. Specifically, *Drosophila melanogaster* S2 cell RNA was fragmented and converted to cDNA via oligo(dT)-primed reverse transcription and an oligonucleotide with a 10-base-pair random label was incorporated by template switching. *Id.* at 3. This is depicted in Figure 3(a), which is reproduced below.

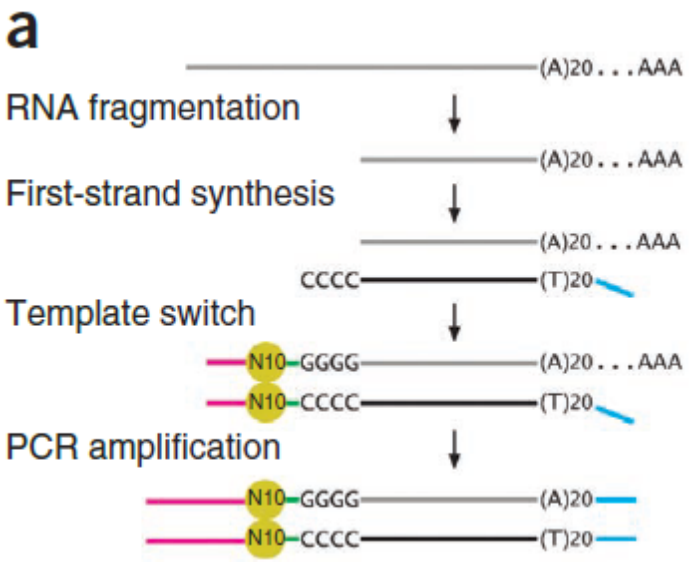

Referencing Figure 3(a), Kivioja explains that "mRNA-seq libraries were generated by fragmenting total RNA and reverse-transcribing it to cDNA using an oligo(dT) primer with an Illumina linker (blue) and a 5′ template switch adaptor containing another Illumina linker (magenta), a 10-base-pair random label (N10) and an index sequence (green)." *Id.* at 2. Kivioja states

that "[t]he combination of label sequence and the 5′ mapped position of the RNA fragment forms the UMI." *Id.*

3. Analysis of Independent Claim 1

"A method for detecting duplicate sequencing reads, the method comprising" (preamble)

Petitioner asserts that to the extent the preamble is limiting and entitled to patentable weight, Kivioja teaches this element in the method of collapsing labeled fragments to a single UMI based on the tag and fragment sequence. Pet. 36 (citing, e.g., Ex. 1079 ¶¶ 236–240, Ex. 1012, 1, 5). Petitioner acknowledges that Kivioja does not use the word "duplicate," but argues that Kivioja uses its mRNA sequencing method to detect the number of molecules after different numbers of PCR cycles, that this method necessarily involves the determination of whether particular observed sequences from the Illumina run were original fragments or PCR copies, and that a person of ordinary skill would have recognized that Kivioja teaches a method of detecting and removing duplicates from sequencing information. Pet. 37 (citing Ex. 1079 ¶¶ 258–259).

Patent Owner does not present arguments in the Preliminary Response addressing the specific merits of Petitioner's contention. *See* Prelim. Resp. 10–16.[7]

On the record at this stage of the proceeding, we determine that Petitioner has made an adequate showing on claim 1's preamble language.[8] Kivioja discloses that "with the UMI method one can reproducibly detect the

[7] We recognize that the burden remains with Petitioner to prove unpatentability of the challenged claims. *See* 35 U.S.C. § 316(e).
[8] We do not need to decide for purpose of institution whether the preamble is limiting.

number of molecules after different numbers of PCR cycles without normalization." Ex. 1012, 2–3. Dr. Sims opines that a person of ordinary skill would have understood that Kivioja's method teaches a method of detecting and removing duplicate sequencing reads, i.e., that Kivioja's method of counting unique sequences necessarily identifies duplicate reads. *See* Ex. 1079 ¶ 260.

"ligating an adaptor to each of a plurality of nucleic acid fragments"

Petitioner asserts that Iafrate discloses ligating each sample with unique barcode adaptors. Pet. 26 (citing Ex. 1011, 29). Petitioner concedes that Kivioja's mRNA method uses a reaction called an RNA template switch to attach the adaptor to the 5′ end of the fragments, rather than a ligation reaction, but argues that a person of ordinary skill would have understood that this reaction could only be used with RNA and that Kivioja separately discloses ligating adaptors to DNA. Pet. 31–32 (citing Ex. 1012, 1–3; Ex. 1079 ¶¶ 244–245). Petitioner argues that it would have been obvious to a person of ordinary skill to use the ligation method for an application like Iafrate's. Pet. 32 (citing, e.g., Ex. 1079 ¶¶ 210–211).

Patent Owner does not present arguments in the Preliminary Response addressing the specific merits of Petitioner's contention. *See* Prelim. Resp. 10–16.

On the record at this stage of the proceeding, we determine that Petitioner has made an adequate showing on this limitation. In particular, Iafrate discloses that double-stranded cDNA can be sheared, end-repaired, adenylated, and then ligated on one or both ends with an adapter for initiating PCR and sequencing. Ex. 2011 ¶ 230.

[wherein each adaptor comprises] "an indexing site unique to a subset of the adaptors"

Petitioner asserts that the Iafrate adaptor includes an indexing site/sample index (referred to as a "barcode"). Pet. 25 (citing Ex. 1079 ¶ 211; Ex. 1011, 11, 13). Petitioner asserts that a person of ordinary skill would have known that Iafrate's sample index would have been unique among a subset of adaptors. *Id.* at 26–27 (citing Ex. 1004, 25:41; Ex. 1079 ¶¶ 213–218).

Patent Owner does not present arguments in the Preliminary Response addressing the specific merits of Petitioner's contention. *See* Prelim. Resp. 10–16.

On the record at this stage of the proceeding, we determine that Petitioner has made an adequate showing on this limitation. In particular, Figure 9 of Iafrate discloses an oligonucleotide-tail adapter that includes a barcode. Ex. 1011 ¶ 33, Fig. 9. Dr. Sims indicates that a person of ordinary skill would understand a barcode is another term for an indexing site. *See* Ex. 1079 ¶ 211. Dr. Sims appears to rely on general knowledge in the art in interpreting Iafrate, that it was generally known that the sample index allows a particular sequencing read to be associated with its sample of origin (e.g., Sample A or B), where the sample index is unique to each sample and allows sequencing reads to be demultiplexed. Ex. 1079 ¶ 1217.

[wherein the adaptor comprises] "a unique identifier site having from about 1 to about 8 nucleotides"

Petitioner asserts Kivioja discloses how to enhance the accuracy of Iafrate's method by adding the remaining feature—a random molecular tag—and teaches that random molecular tags are used in combination with a fragment sequence as a "unique molecular identifier" ("UMI") for the

identification of duplicate sequencing reads. Pet. 25 (citing Ex. 1012, 1, 5, 14). Petitioner argues that the length of the molecular tag is a paradigmatic result-effective variable. Pet. 39. Petitioner argues that optimizing the length is simply a function of the known relationship between the number of resulting tags (i.e., 4^n) and the expected number of unique fragments in a particular sample. *Id.* (citing, e.g., Ex. 1079 ¶¶ 264–266).

Patent Owner does not present arguments in the Preliminary Response addressing the specific merits of Petitioner's contention other than to argue that Iafrate fails to disclose this limitation. *See* Prelim. Resp. 10–16.

On the record at this stage of the proceeding, we determine that Petitioner has made an adequate showing on this limitation. In particular, Kivioja discloses a method of making each molecule in a population unique, including by adding a random DNA sequence label, by fragmenting, or taking an aliquot, such that each molecule has a distinct identifying sequence, and designating the resulting sequences that can be used to uniquely identify copies derived from each molecule as unique molecular identifiers (UMIs). Ex. 1012, 1.

On the preliminary record at this stage of the proceeding, we determine that Petitioner has also made an adequate showing that the length of the sequence is a result-effective variable that can be optimized. Dr. Sims opines that the number of unique molecular tags was a simple function of the length of the molecular tag (4n), and if the number of target molecules changes, so too does the optimal number of labels required to ensure efficient and unique labeling. Ex. 1079 ¶ 264.

[wherein the adaptor comprises] "a primer binding site"

Petitioner asserts that the Iafrate adaptor includes two primer binding sites, i.e., an indexing primer binding site (referred to as a "barcode

sequencing primer binding site") and a target sequence binding site (referred to as a "sequencing primer binding site"). Pet. 25–26 (citing Ex. 1079 ¶ 211; Ex. 1011, 11, 13).

Patent Owner does not present arguments in the Preliminary Response addressing the specific merits of Petitioner's contention. *See* Prelim. Resp. 10–16.

On the record at this stage of the proceeding, we determine that Petitioner has made an adequate showing on this limitation. In particular, Figure 9 of Iafrate discloses an oligonucleotide-tail adapter that includes a barcode sequencing primer binding site and a sequencing primer binding site. Ex. 1011 ¶ 33, Fig. 9. Dr. Sims indicates that a person of ordinary skill would understand a barcode sequencing primer binding site is another term for an indexing primer binding site. *See* Ex. 1079 ¶ 211. Dr. Sims indicates that a person of ordinary skill would understand a sequencing primer binding site is another term for a target sequence binding site. *See id*.

> *"amplifying the adaptor-ligated fragments into amplicons";*
>
> *"sequencing the amplicons to produce sequence reads that include identifier and target sequences;"*

Petitioner argues Kivioja discloses amplifying the tagged fragments and sequencing them. *See* Pet. 30, 32, 36 (citing, e.g., Ex. 1012, 1, 4, 5; Ex. 1079 ¶ 247).

Patent Owner does not present arguments in the Preliminary Response addressing the specific merits of Petitioner's contention. *See* Prelim. Resp. 10–16.

On the record at this stage of the proceeding, we determine that Petitioner has made an adequate showing on these limitations. In particular,

in Kivioja's mRNA experiments, the libraries were amplified using Phusion High-Fidelity DNA polymerase, the PCR products were purified, and then subjected to Illumina GAIIx massively parallel sequencing. Ex. 1012, 4; Ex. 1079 ¶ 247.

"identifying sequence reads with identical identifier and target sequences as duplicates"

In discussing the preamble above, we have found that Petitioner has made an adequate showing that Kivioja discloses identifying a duplicate sequencing read. As to "identical identifier and target sequences," Petitioner argues that the combination of the fragment sequences (mapped against known Drosophila genes) and the random label sequence were used to determine whether particular sequence reads were unique or PCR duplicates. Pet. 32 (citing Ex. 1079 ¶ 248).

Patent Owner argues that Kivioja fails to disclose a process of detecting duplicates based on both an identifier site and at least a portion of the nucleic acid fragment. Prelim. Resp. 11. Patent Owner argues that Petitioner cannot point to a disclosure in Kivioja that discloses the use of a portion of the target sequence in combination with the identifier site to identify a duplicate sequence read. *Id.* Patent Owner argues that Kivioja relies on the "gene" (i.e., a proposed chromosomal location of the original genomic sequence) and its "position" (i.e., the proposed mapped location of the target sequence to the reference genome). *Id.* at 11–12.

Patent Owner does acknowledge that Kivioja describes looking to the "gene, position and label," but Patent Owner appears to argue that Kivioja's label is the UMI (*see* Prelim. Resp. 12 (citing Ex. 1012, 5)), whereas Petitioner appears to understand the UMI to be the combination of the label

and the fragment (*see, e.g.*, Pet. 29 (citing Ex. 1012, 1; Ex. 1079 ¶¶ 238–239)).

On this record, we determine that Petitioner has made an adequate showing that Kivioja uses a combination of the label and fragment as the UMI to determine whether there is duplication. With respect to the mRNA experiments, Kivioja states "[t]he mapped reads with the same gene, position and label were collected to one UMI." Ex. 1012, 5.[9] Therefore, we find that it is a better reading of Kivioja, on the record at the current stage of the proceeding, that Kivioja's UMI includes the gene, position, and label.

Patent Owner also argues:

> . . . Kivioja's process of mapping a sequence to a reference genome and using the position to identify duplicates is not the same as using at least some of the target sequence to identify a duplicate sequence read and would not have taught a POSA to use the target sequence in this process. Petitioner's argument is essentially that Kivioja uses the identified position in the reference genome as a "surrogate" for the target sequence. But a POSA would not have understood Kivioja's "surrogate" to be a substitute for the target sequence because the position of a sequence read and the corresponding gene provide different information than the target sequence. Therefore, Kivioja's use of the gene position would not teach a POSA to use at least a portion of the target sequence for identifying duplicate reads.

Prelim. Resp. 12–13. Patent Owner's argument appears to be that Kivioja's method fails to use the target sequence in determining sequence read duplication. All that the claim requires is that the method identifies sequence reads with identical identifier and target sequences as duplicates.

---

[9] With respect to the DNA experiments, Kivioja states "we used the 5′ genomic position of each mapped read as the UMI." Ex. 1012, 4. Kivioja also states that "[t]he sequence of the label and the 5′ mapped position of the fragment together define the UMI." *Id.* at 3.

Nevertheless, Patent Owner poses the question of whether Kivioja relies on the sequence of the label and the sequence of the target fragment, when Kivioja states: "The mapped reads with the same gene, position and label were collected to one UMI." Ex. 1012, 5. When Kivioja states that reads with the "same . . . label" were "collected to one UMI," we understand that to mean that the labels have identical sequences. Kivioja also discloses that "two UMIs were merged if they either had identical positions and one mismatch in the label sequences . . . ." *Id.* This indicates that not only were identical labels considered to be duplicates, but also labels that had one mismatch, i.e., in order to limit the effect of sequencing errors. *See id.* On this record, because claim 1 contains the transition "comprising," the claim is still satisfied if the category of identified duplicate reads contains identical labels and also contains more.

We also address Patent Owner's argument that Kivioja uses the position of the target fragment instead of the sequence of the target fragment. Kivioja discloses that "[f]or each gene, the sequence of its longest transcript was used as the reference sequence. Reads were discarded from further analysis if they did not contain the constant sequences expected based on oligonucleotide design, mapped to the wrong strand, [or] had a BWA mapping quality score lower than 20 . . . ." Ex. 1012, 5; *see also id.* ("Total read count of a gene is the number of accepted reads mapped to its reference sequence."). On the preliminary record, we understand Kivioja to mean that the mapped position was based on the gene sequence. *See also* Ex. 1079 ¶ 248, ¶ 276, ¶ 277 ("Mapping reads to the genome necessarily required matching the observed sequence of the nucleic acid fragment to the

expected sequence."), ¶ 278.[10] On this record, we cannot rule out that some additional sequences mapped to the same position even if they did not have an identical sequence. *See also id.* ¶ 278 ("Kivioja first mapped the sequence of the nucleic acid fragments to a reference genome and then used 'the 5′ mapped position of the fragment' to identify PCR biases, or PCR-introduced error").

Because claim 1 contains the transition "comprising," the claim is still satisfied if the category of identified duplicate reads contains identical nucleic acid fragments and also contains more.

Kivioja relied on the combination of label and nucleic acid fragment to identify duplicates. *See* Ex. 1012, 1 ("We designate the resulting sequences that can be used to uniquely identify copies derived from each molecule unique molecular identifiers (UMIs; Fig. 1)."), 3 ("The sequence of the label and the 5′ mapped position of the fragment together define the UMI.").

We, therefore, determine that Petitioner has made an adequate showing for "identifying a duplicate sequencing read" at this stage of the proceeding. The parties may further develop their arguments after institution.

Motivation to Combine and Reasonable Expectation of Success

Petitioner argues that a person of ordinary skill would have been motivated to incorporate the Kivioja molecular tag into the Iafrate adaptor in order to realize the Iafrate's method's full potential, i.e., by mitigating PCR errors and improving accuracy. *See* Pet. 33 (citing Ex. 1079 ¶¶ 225–249).

---

[10] Dr. Sims noted that in Kivioja, after sequencing, reads were mapped to the genome. Ex. 1079 ¶ 277 (citing Ex. 1012, 4).

Patent Owner argues that Petitioner's argued motivation is conclusory, based on improper hindsight, or based on the ipse dixit of an expert witness. Prelim. Resp. 10. On this record, we conclude that Petitioner has made an adequate showing of motivation to combine, not based on hindsight, e.g., when Petitioner points to the statement in Kivioja that use of Kivioja's method "can improve accuracy of almost any next-generation sequencing method." Pet. 3, 29 (citing Ex. 1012, 1); Ex. 1012, 1.

Patent Owner argues that Petitioner glosses over the differences between Iafrate and Kivioja's adaptors. Prelim. Resp. 14. Patent Owner argues that Iafrate is concerned with cancer mutations whereas Kivioja is concerned with karyotyping. *Id.* at 15. However, Patent Owner does not explain why Iafrate's method of identifying cancer mutations would not benefit from an increase in accuracy using Kivioja's method.

Patent Owner argues that the Petition is silent as to which aspects of Iafrate would be used in the combined method. Prelim. Resp. 14. Although the Petition does in certain places rely on both Iafrate and Kivioja for the same limitation, we understand the Petition primarily to rely on Iafrate for "ligating an adaptor to each of a plurality of nucleic acid fragments, wherein each adaptor comprises . . .an indexing site unique to a subset of the adaptors, and a primer binding site." *See* Pet. 25–26.

Patent Owner argues Iafrate does not provide a suggestion to use a shorter molecular tag and does not use a molecular tag at all. Prelim. Resp. 14 (citing Pet. 38). Patent Owner appears to refer to the following argument in the Petition: "Although Kivioja used a 10-nucleotide molecular tag, Kivioja provided a specific motivation to use a shorter molecular tag, particularly for an application like Iafrate's." *See* Pet. 38. However, Petitioner also argues that the length of the molecular tag is a result-effective

variable. *See id.* at 39. In context, Petitioner appears to be arguing that a shorter molecular tag would have worked even in Iafrate's method because there would have been a relatively small number of original fragments of interest. *See* Pet. 38–39. Dr. Sims opines that "[t]he POSA would have understood that for the targeted enrichment methods of Iafrate, particularly when combined with a relatively low sample concentration, the ten nucleotide molecular tag used in Kivioja, which was excessive even for Kivioja's shotgun sequencing method, would have been optimized to a lower number, including a molecular tag with between 1 and 8 nucleotides." Ex. 1079 ¶ 269. On the record at this stage of the proceeding, Dr. Sims's testimony is consistent with the teaching in Iafrate that the amount of starting nucleic acid material may vary. *See* Ex. 1011 ¶ 230; Ex. 1079 ¶ 269 (citing Ex. 1011, 29).

Therefore, we conclude that Petitioner has made an adequate showing that a person of ordinary skill would have sought to combine the teachings of Iafrate and Kivioja to arrive at the method of claim 1, and would have had a reasonable expectation of success.

a) Summary of Claim 1

On the record at this stage of the proceeding, Petitioner has demonstrated a reasonable likelihood that claim 1 of the '357 patent would have been obvious over Iafrate and Kivioja. Because we find a reasonable likelihood that Petitioner would prevail at trial as to at least one asserted claim (and because we decline to exercise our discretion to deny institution under 35 U.S.C. § 325(d) (*see* Section II.G.3., *infra*), we institute on all claims and all grounds asserted in the Petition. *See* 35 U.S.C. § 314(a); *SAS Institute, Inc. v. Iancu*, 584 U.S. 357, 362 (2018).

4. Analysis of Dependent Claims 2–4, 6, 7, 9, and 10

As discussed above in Section II.D.3., we determine that Petitioner has shown a reasonable likelihood of proving that claim 1 is unpatentable under 35 U.S.C. § 103 over Iafrate and Kivioja. As a result, institution of an *inter partes* review is warranted as to all challenged claims on all grounds asserted in the Petition, and the parties will have additional opportunities to address the dependent claims after institution.

E. Alleged Anticipation of Claims 1–4, 6, 7, and 10 by Bielas

Petitioner contends that claims 1–4, 6, 7, and 10 are anticipated by Bielas. Pet. 47–65. Patent Owner disagrees. Prelim. Resp. 16–22.

1. Bielas

Bielas is a Patent Cooperation Treaty publication of an international application titled "Compositions and Methods for Accurately Identifying Mutations." Ex. 1013, code (54). Bielas "relates to compositions and methods for accurately detecting mutations using sequencing and, more particularly, uniquely tagging double stranded nucleic acid molecules such that sequence data obtained for a sense strand can be linked to sequence data obtained from the anti-sense strand when obtained via massively parallel sequencing methods." *Id.* at 1:15–19.[11]

Bielas explains that the detection of spontaneous mutations and induced mutations that occur randomly throughout a genome can be difficult because such mutations "are rare and may exist in one or only a few copies of DNA." Ex. 1013, 1:21–24. However, according to Bielas, "a mutation

[11] For Bielas, we use the internal reference page numbers as opposed to the marked Exhibit page numbers.

must be present in as much as 10-25% of a population of molecules to be detected by sequencing." *Id.* at 1:25–2:3. To address this, Bielas describes

> a double-stranded nucleic acid molecule library that includes a plurality of target nucleic acid molecules and a plurality of random cyphers, wherein the nucleic acid library comprises molecules having a formula of X^a-X^b-Y, X^b-X^a-Y, Y-X^a-X^b, Y-X^b-X^a, X^a-Y-X^b, or X^b-Y-X^a (in 5′ to 3′ order), wherein (a) X^a comprises a first random cypher, (b) Y comprises a target nucleic acid molecule, and (c) X^b comprises a second random cypher. Furthermore, each of the plurality of random cyphers comprise a length ranging from about 5 nucleotides to about 50 nucleotides (or about 5 nucleotides to about 10 nucleotides, or a length of about 6, about 7, about 8, about 9, about 10, about 11, about 12, about 13, about 14, about 15, about 16, about 17, about 18, about 19, or about 20 nucleotides).

Id. at 2:29–3:8.

Bielas describes a first example of dual cypher sequencing of normal and tumor genomic libraries. *See* Ex. 1013, 24:12–15. Bielas states that isolated genomic DNA is fragmented by shearing and "[t]he DNA fragments having overhang ends are repaired (*i.e.,* blunted) using T4 DNA polymerase (having both 3′ to 5′ exonuclease activity and 5′ to 3′ polymerase activity) and the 5′-ends of the blunted DNA are phosphorylated with T4 polynucleotide kinase . . . , and then purified." *Id.* at 24:17–22. Further, "[t]he end-repaired DNA fragments are ligated into the *Sma*I site of the library of dual cypher vectors shown in Figure 2 to generate a target genomic library. *Id.* at 24:23–24.

Bielas states that this *Sma*I site is shown in Figure 2, which is reproduced below. Ex. 1013, 24:23–24.

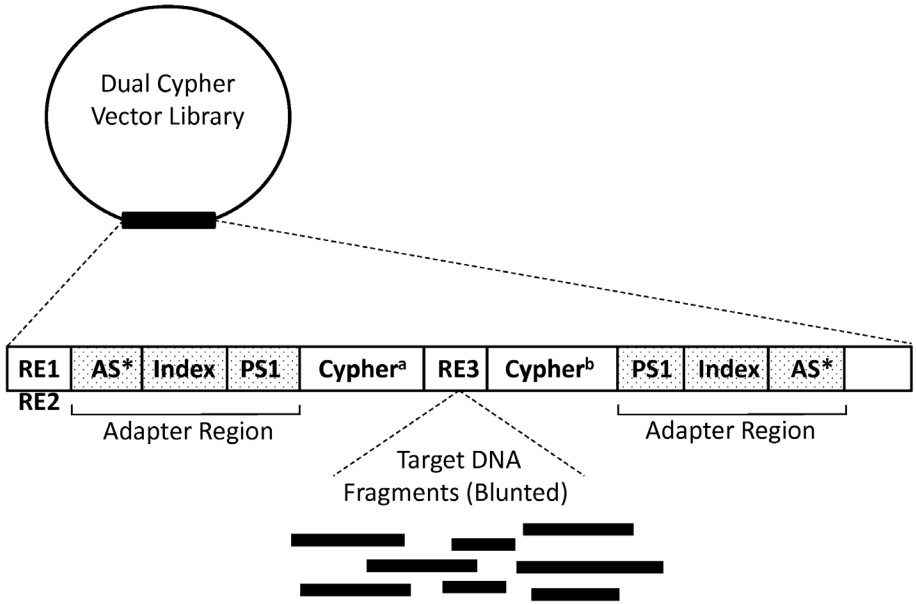

Fig. 2

Figure 2 depicts an exemplary vector, "wherein adaptor sequences are included and are useful for, for example, bridge amplification methods before sequencing." *Id.* at 4:1–3. Bielas explains that "[t]he ligated cypher vector library is purified and the target genomic library fragments are amplified" via a PCR protocol. *Id.* at 24:25–28. Bielas further states:

> The amplification is performed using sense strand and anti-sense strand primers that anneal to a sequence located within the adapter region (in certain embodiments, the primer will anneal to a sequence upstream of the AS), and is upstream of the unique cypher and the target genomic insert (and, if present, upstream of an index sequence if multiplex sequencing is desired; *see, e.g.,* Fig. 2) for Illumina bridge sequencing.

Id. at 24:28–25:4. Bielas states that "[t]he unique cypher tags are used to computationally deconvolute the sequencing data and map all sequence reads to single molecules (*i.e.,* distinguish PCR and sequencing errors from real mutations)." *Id.* at 25:7–9.

Bielas describes another example where "[d]ual cypher sequencing of present disclosure was used to detect somatic TP53 mutations that arose during replication in *E. coli.*" *Id.* at 26:21–22. When explaining results, Bielas states:

> TP53 Exon 4 DNA from a dual cypher vector library produced in *E. coli* was sequenced with a depth of over a million, and all sequencing reads with identical cypher pairs and their reverse complements were grouped into families to create a consensus sequence. As illustrated in Figure 3B, errors introduced during library preparation (open circle) and during sequencing (gray circle and triangle) were computationally eliminated from the consensus sequence and only mutations present in all reads (black diamonds, Figure 3B) of a cypher family were counted as true mutations (*see* bottom of Figure 3B).

Id. at 29:26–30:2. Figure 3B is reproduced below.

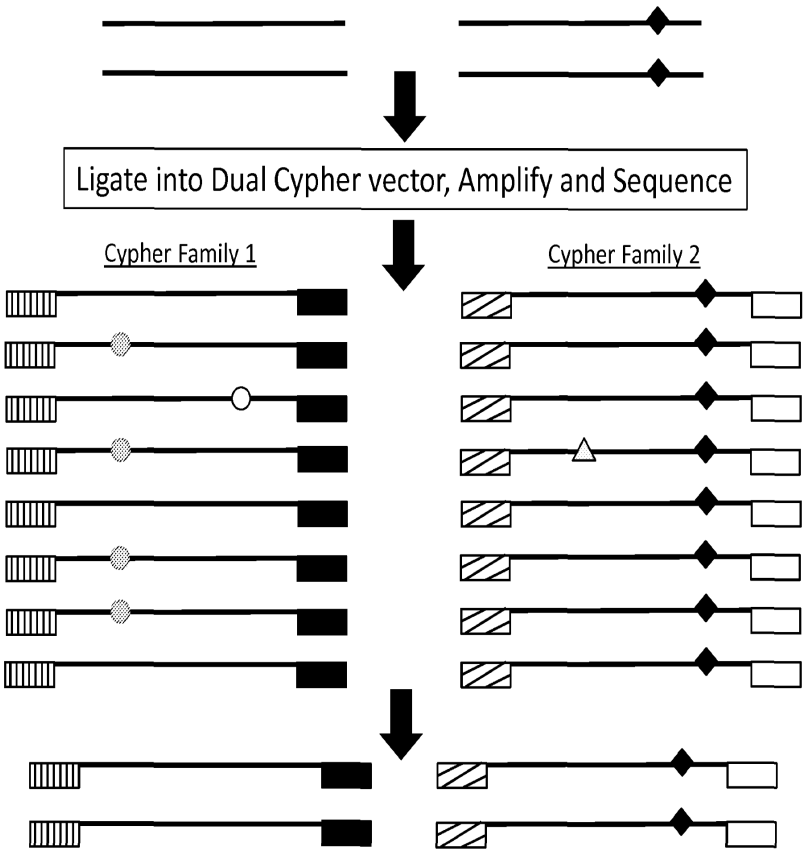

Fig. 3B

2. Analysis of Independent Claim 1

Petitioner asserts that Bielas discloses all of the limitations of claim 1. Pet. 53–63. Patent Owner argues that Bielas does not disclose identifying sequence reads with identical identifier and target sequences as duplicates. *See* Prelim. Resp. 16–20. Having found that institution of an *inter partes* review is warranted as to all challenged claims on all grounds asserted in the Petition based on the ground of obviousness over Iafrate and Kivioja, we focus our analysis in the ground of anticipation by Bielas on the disputed limitation.

a) "identifying sequence reads with identical identifier and target sequences as duplicates"

Petitioner asserts that Bielas discloses that fragments can be "computationally deconvolute[d]" using cypher-fragment sequences to distinguish "true mutations" found in original fragments from "artifact 'mutations'" generated during library preparation. Pet. 60–61 (citing Ex. 1013, 24–25, 27, 37). Petitioner argues that this process requires Bielas to first identify duplicate sequencing reads as those comprising the same Cypher/identifier site and fragment sequence as other reads. *Id.* at 61 (citing Ex. 1079 ¶¶ 577–579, 508–509).

Patent Owner argues that neither Bielas nor Petitioner provides an explanation as to what "deconvoluting" in Bielas entails, and even if deconvoluting identifies duplicates, Bielas does not disclose the use of both the identifier site and any part of a nucleic acid fragment to identify duplicates as part of this step. Prelim. Resp. 17–18.

Bielas states that "[b]arcodes were used to deconvolute the sequencing data." Ex. 1013, 29:23–24. Bielas also states that "[t]he unique cypher tags are used to computationally deconvolute the sequencing data and map all sequence reads to single molecules." *Id.* at 25:7–8.

Petitioner argues that Bielas explains, in Example 3, that "all sequencing reads with identical cypher pairs and their reverse complements were grouped into families to create a consensus sequence" and then "errors introduced during library preparation and during sequencing were computationally eliminated from the consensus sequence and only mutations present in all reads of a cypher family were counted as true mutations." Pet. 61–62 (citing Ex. 1013, 31–32). Petitioner argues that, to perform this comparison, Bielas looks at both the cypher sequence, to group reads, and

the fragment sequence, to ascertain whether a particular sequence contained a mutation. *Id.* at 61–62 (citing Ex. 1013, 31–32, 43; Ex. 1079 ¶¶ 483–486).

Patent Owner responds that because Bielas is directed to distinguishing between sequencing errors and mutations within the nucleic acid fragments, the Bielas method does not teach a person of ordinary skill to look to the nucleic acid fragments to match duplicates, since the nucleic acid fragments would contain the very errors and mutations that a POSA would seek to differentiate. Prelim. Resp. 19.

Bielas uses the cyphers to perform deconvolution. Ex. 1013, 25, 29. Bielas also differentiates true mutations from mutations created during library preparation. *Id.* at 29–30. We do not reach a determination at this time as to whether Bielas also relies on the target sequence to identify a duplicate. Whether Bielas's convolution "identif[ies] a duplicate sequencing read . . . comprising the same identifier site and nucleic acid fragment as another sequencing read" is an issue that the parties may further address at trial.[12]

3. Analysis of Dependent Claims 2–4, 6, 7, and 10

As discussed above in Section II.D.3., we determine that Petitioner has shown a reasonable likelihood of proving that claim 1 is unpatentable under 35 U.S.C. § 103 over Iafrate and Kivioja. As a result, institution of an *inter partes* review is warranted as to all challenged claims on all grounds asserted in the Petition, and the parties will have additional opportunities to

[12] Petitioner also argues that a person of ordinary skill would have understood Bielas's adaptor to include a "primer binding site." Pet. 58–59. Patent Owner does not directly contest this finding at this time. *See* Prelim. Resp. 20–21. However, the parties are free to develop this issue further during trial.

address the ground of anticipation by Bielas, including the dependent claims after institution.

F. Alleged Obviousness of Claims 1–4, 6, 7, 9, and 10 over Bielas

Petitioner contends that claims 1–4, 6, 7, 9, and 10 would have been obvious over Bielas. Pet. 66–70. Patent Owner disagrees.

Patent Owner argues that Petitioner has not shown that a person of ordinary skill would have been motivated to modify Bielas to cure the deficiencies of Bielas. *See* Prelim. Resp. 21. As with the ground of anticipation by Bielas, the parties will have an opportunity to address the merits of this ground after institution.

G. Patent Owner's Arguments Regarding 35 U.S.C. § 325(d)

Patent Owner contends that the Board should deny institution under 35 U.S.C. § 325(d) because, according to Patent Owner, Iafrate discloses substantially the same information as Samuels and McCloskey, and Kivioja and Bielas disclose substantially the same information as Samuels and McCloskey. Prelim. Resp. 23–27. We address Patent Owner's arguments as follows.

1. Applicable Precedent[13]

Section 325(d) provides that the Director may elect not to institute a proceeding if the challenge to the patent is based on matters previously presented to the Office. 35 U.S.C. § 325(d) states, in pertinent part,

> In determining whether to institute or order a proceeding under this chapter, chapter 30, or chapter 31, the Director may take into account whether, and reject the petition or request because, the

[13] This statement of applicable precedent is excerpted from *Weatherford U.S., L.P. v. Eventure Global Tech., Inc.*, IPR2021-00107, Paper 11 at 12–14 (PTAB May 26, 2021).

> same or substantially the same prior art or arguments previously were presented to the Office.

The Board uses a two-part framework for evaluating arguments under § 325(d):

> (1) whether the same or substantially the same art previously was presented to the Office or whether the same or substantially the same arguments previously were presented to the Office; and
>
> (2) if either condition of first part of the framework is satisfied, whether the petitioner has demonstrated that the Office erred in a manner material to the patentability of challenged claims.

Advanced Bionics, LLC v. MED-EL Elektromedizinische Geräte GmbH, IPR2019-01469, Paper 6 at 8 (PTAB Feb. 13, 2020) (precedential). "[T]he *Becton, Dickinson* factors provide useful insight into how to apply the framework under 35 U.S.C. § 325(d)." *Id.* at 9 (footnote omitted). The non-exclusive *Becton, Dickinson* factors are:

> (a) the similarities and material differences between the asserted art and the prior art involved during examination;
>
> (b) the cumulative nature of the asserted art and the prior art evaluated during examination;
>
> (c) the extent to which the asserted art was evaluated during examination, including whether the prior art was the basis for rejection;
>
> (d) the extent of the overlap between the arguments made during examination and the manner in which Petitioner relies on the prior art or Patent Owner distinguishes the prior art;
>
> (e) whether Petitioner has pointed out sufficiently how the Examiner erred in its evaluation of the asserted prior art; and
>
> (f) the extent to which additional evidence and facts presented in the Petition warrant reconsideration of the prior art or arguments.

Becton, Dickinson & Co. v. B. Braun Melsungen AG, IPR2017-01586, Paper 8 at 17–18 (PTAB Dec. 15, 2017) (precedential as to § III.C.5, first paragraph). *Becton, Dickinson* factors (a), (b), and (d) relate to the first part of the *Advanced Bionics* framework (whether the same or substantially the same art or arguments previously were presented to the Office), and *Becton, Dickinson* factors (c), (e), and (f) relate to the second part of that framework (previous Office error). *Advanced Bionics*, IPR2019-01469, Paper 6 at 9–11. Only if the same or substantially the same art or arguments were previously presented to the Office do we then consider whether petitioner has demonstrated a material error by the Office. *Id.*

Under § 325(d), the art and arguments must have been previously presented to the Office during proceedings, such as examination of the underlying patent application, pertaining to the challenged patent. *Advanced Bionics*, IPR2019-01469, Paper 6 at 7. Previously presented art includes art made of record by the Examiner, and art provided to the Office by an applicant, such as on an Information Disclosure Statement ("IDS"), in the prosecution history of the challenged patent. *Id.* at 7–8.

2. Advanced Bionics, Part One

Petitioner argues that none of the references relied on in the Petition, i.e., Iafrate, Kivioja, and Bielas, were before the Examiner. Pet. 21.

Patent Owner argues that Iafrate discloses substantially the same information as Samuels and McCloskey, and that Kivioja and Bielas disclose substantially the same information as Samuels and McCloskey. Prelim. Resp. 23–27.

We focus our analysis on whether Iafrate is substantially the same as McCloskey and whether Kivioja is substantially the same as McCloskey.

a) Whether Iafrate is Substantially the Same as McCloskey

Patent Owner argues that McCloskey discloses similar adaptors to the adaptors shown in Figure 9 of Iafrate, with the elements of an indexing site/sample index, an index primer binding site, and a target sequence primer binding site. Prelim. Resp. 24–25.

During prosecution, the Examiner issued a non-final rejection on December 8, 2020, with a rejection under § 103 of claims 22, 29, and 30 as being unpatentable over Samuels (Ex. 1033) and McCloskey (Ex. 1022). *See* Ex. 1019, 397–398, 400–401. The Examiner found that McCloskey teaches, among other things, attaching an adaptor containing a target sequence binding site, and grouping sequencing reads based on a batch stamp and barcode. *Id.* at 402. McCloskey discloses these features. *See* Ex. 1022, 3 (Fig. 1 and description). The Patent Owner, as applicant, had a different basis for distinguishing McCloskey, i.e., Patent Owner argued that McCloskey did not rely on identical identifier and fragment sequences to discern duplication. *See* Ex. 1019, 453. The Petitioner here primarily relies on Iafrate for ligating an adaptor containing an indexing/sample site, an indexing primer binding site, and a target sequence binding site (*see* Pet. 25–26), and we find above that Petitioner has made an adequate showing that Iafrate discloses these limitations. *See* Section II.D.3., *supra*. We, therefore, find that Iafrate discloses substantially the same limitations as McCloskey, when considering the limitations that Iafrate is relied on for. Accordingly, we find that the first part of the *Advanced Bionic*s framework is satisfied.

b) Whether Kivioja is Substantially the Same as McCloskey

Before we move on to the second part of the *Advanced Bionics* framework, we also consider under the first part whether Kivioja teaches substantially the same limitations as McCloskey, as this will also be relevant to our further analysis under the second part.

Patent Owner argues that like Kivioja, McCloskey uses barcodes (i.e. "identifier sites," or "labels") to identify sequence reads and does not teach a person of ordinary skill to look at the barcode in conjunction with a portion of the target sequence. Prelim. Resp. 25.

During prosecution, the Examiner relied on McCloskey for grouping the sequencing reads based on the batch stamp and barcode and detecting and removing duplicate reads. Ex. 1019, 402. Also during prosecution, Patent Owner argued that McCloskey relied solely on the same "barcode" and "batch-stamp" whereas the claims relied on both the identical identifier and the fragment sequences to identify duplicate sequences. *See* Ex. 1019, 451–452.

Above, we find that Petitioner has made an adequate showing that Kivioja relies on the sequence of both the molecular tag and the target sequence to identify a duplicate sequencing read. *See* Section II.D.3., *supra*. We, therefore, conclude that Kivioja does not teach substantially the same limitations as McCloskey.

c) Conclusion as to Advanced Bionics, Part One

Having found that Iafrate teaches substantially the same limitations as McCloskey, we proceed to the next part of the framework. We need not consider Patent Owner's other arguments under part one. We do find,

nevertheless, that Kivioja does not teach substantially the same limitations as McCloskey.

3. Advanced Bionics, Part Two

Patent Owner argues that Petitioner has failed to identify material error in the Examiner's determination. Prelim. Resp. 27. Patent Owner argues that Kivioja fails to disclose the identification of duplicate sequences based on both the identifier site and a portion of the nucleic acid fragment. *See id.* at 28.

As set forth in Sections II.D.3. and II.G.2.b., we determine that Petitioner has made an adequate showing that Kivioja takes into account the sequence of both the molecular tag and the target sequence in identifying duplicates, and that this differs from McCloskey. Because Kivioja, with its use of both the molecular tag and the target sequence, was not under consideration during prosecution, we determine that this was material error in prosecution. *See Oticon Medical AB v. Cochlear Limited*, IPR2019-00975, Paper 15 (October 16, 2019) (precedential as to §§ II.B and II.C) ("On the record before us, we determine that there was error in the prosecution leading to the issuance of the '807 patent because Choi, with its teaching of circumferential grooves, was not considered."). Kivioja's use of the sequence of both the molecular tag and the target sequence is material because the Patent Owner had argued in prosecution (as discussed above) that McCloskey lacked this feature. *See* Section II.G.2.b., *supra*.

We, therefore, decline to exercise our discretion to deny institution under 35 U.S.C. § 325(d).

III. CONCLUSION

We conclude, on the present record, that Petitioner has demonstrated a reasonable likelihood of prevailing on its assertion that at least one of claims 1–4, 6, 7, 9, and 10 of the '357 patent is unpatentable.

Any argument not raised in a Patent Owner Response to the Petition, or as permitted in another manner during trial, shall be deemed forfeited and/or waived even if asserted in the Preliminary Response. *In re Google Tech. Holdings LLC*, 980 F.3d 858, 862–64 (Fed. Cir. 2020) (holding an argument forfeited when not timely raised before the Board); *In re NuVasive, Inc.*, 842 F.3d 1376, 1380–81 (Fed. Cir. 2016) (holding Patent Owner waived an argument addressed in the Preliminary Response by not raising the same argument in the Patent Owner Response or as otherwise permitted during trial).

IV. ORDER

In consideration of the foregoing, it is hereby:

ORDERED that, pursuant to 35 U.S.C. § 314(a), an *inter partes* review of claims 1–4, 6, 7, 9, and 10 of the '357 patent is instituted on all challenges included in the Petition;

FURTHER ORDERED that, according to 35 U.S.C. § 314(c) and 37 C.F.R. § 42.4, notice is hereby given of the institution of a trial that commences on the entry date of this Decision.

For PETITIONER:

Thomas Fletcher
Jessamyn Berniker
Nicholas Vincent
WILLIAMS & CONNOLLY LLP
tfletcher@wc.com
jberniker@wc.com
nvincent@wc.com

For PATENT OWNER:

Linnea Cipriano
Scott Weingaertner
GOODWIN PROCTER LLP
lcipriano@goodwinlaw.com
sweingaertner@goodwinlaw.com