PATENT

IN THE UNITED STATES PATENT AND TRADEMARK OFFICE

| | | | |
|---|---|---|---|
| First Named Inventor: | Yunfei Zheng | | |
| Filed: | Herewith | Customer No.: | 15150 |
| Docket No.: | 1010-893USP2/112573P2 | | |
| Title: | ROBUST MERGE CANDIDATE SELECTION | | |

**REQUEST FOR PROVISIONAL APPLICATION UNDER 37 C.F.R. § 1.53(c)**

Commissioner for Patents
Alexandria, VA 22313-1450

Dear Sir:

This is a request for filing a Provisional application for patent under 37 CFR § 1.53(c) entitled ROBUST MERGE CANDIDATE SELECTION.

1. ☒ Enclosed is the Provisional application for patent as follows: 26 pages of specification, and 7 sheets of drawings.

2. ☒ Payment of Provisional filing fee under 37 C.F.R. § 1.16(k) :
   ☒ Please charge Deposit Account No. 50-1778 in the amount of $250.00.

3. ☒ The Commissioner is hereby authorized to charge any additional fees as set forth in 37 CFR §§ 1.16 to 1.18 which may be required by this paper or credit any overpayment to Deposit Account No. 50-1778.

4. ☒ Application Data Sheet

5. ☒ Address all future communications to Practitioners at Customer Number 15150.

Date:
October 4, 2011

By:
/Matthew J. Evans/
Name: Matthew J. Evans, Reg No. 56,530

SHUMAKER & SIEFFERT, P.A.
1625 Radio Drive, Suite 300
Woodbury, Minnesota 55125
Telephone: 651.286.8362
Facsimile: 651.735.1102

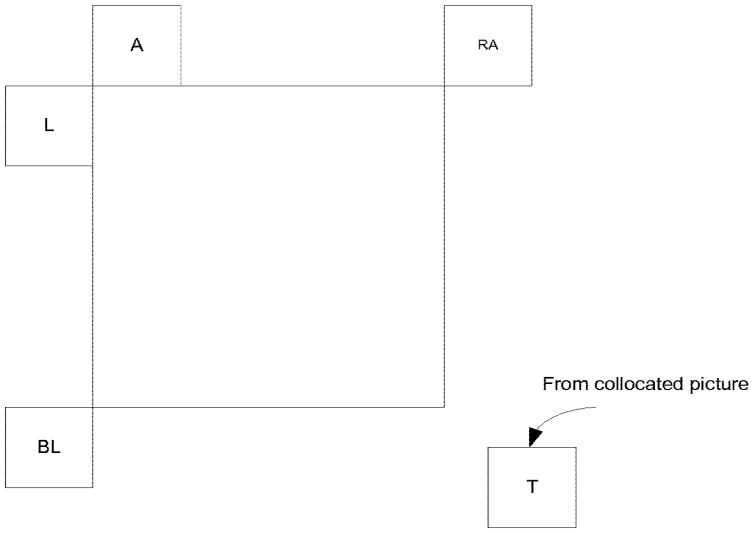


FIG. 1

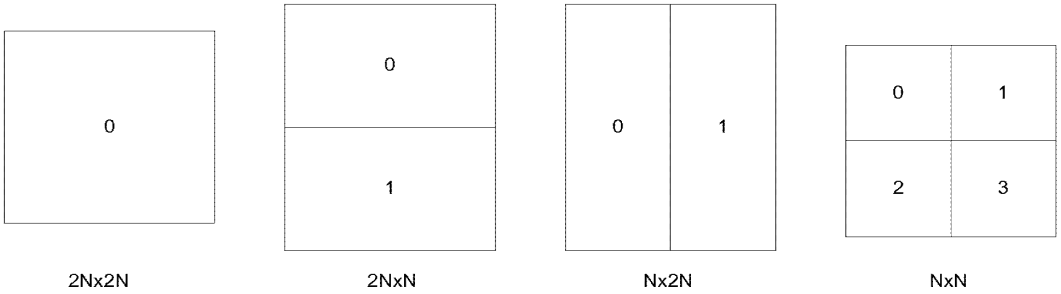


FIG. 2

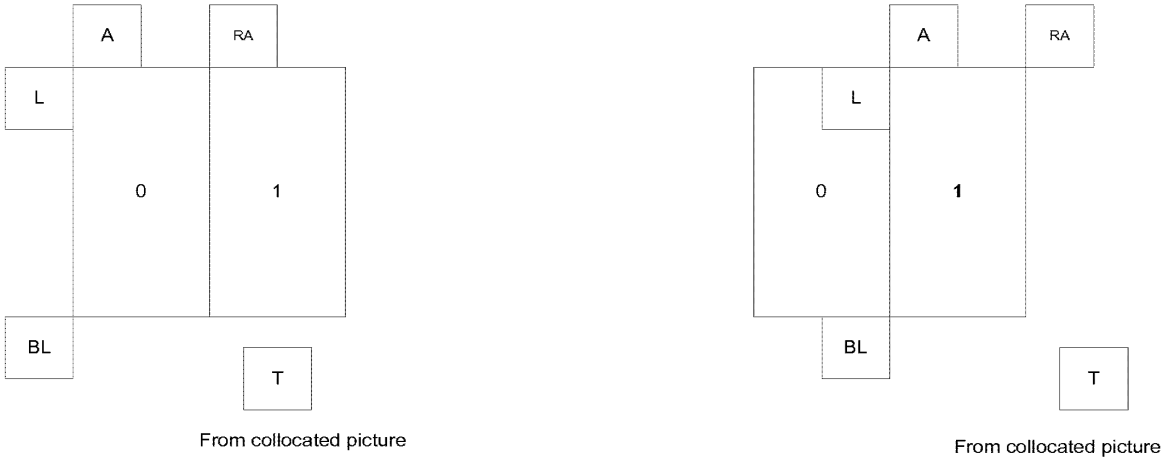
A
RA
L
0
1
BL
T
From collocated picture
A
RA
L
0
1
BL
T
From collocated picture

FIG. 3

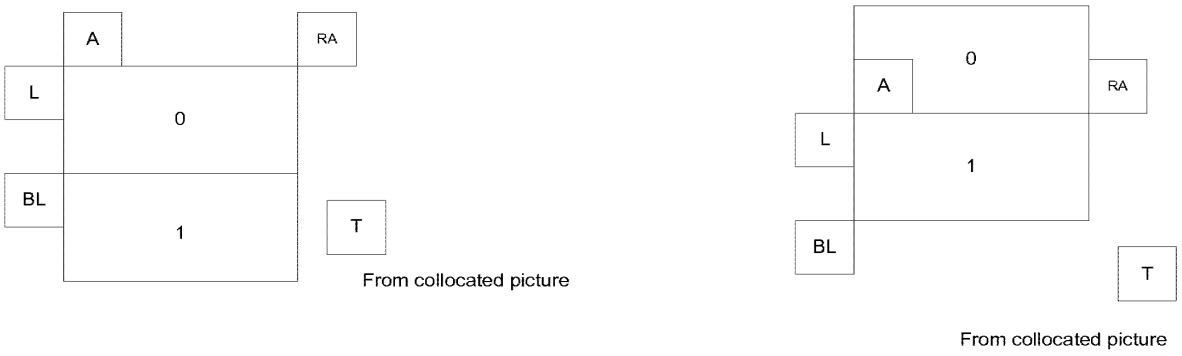
A
RA
L
0
BL
1
T
From collocated picture
0
A
RA
L
1
BL
T
From collocated picture

FIG. 4

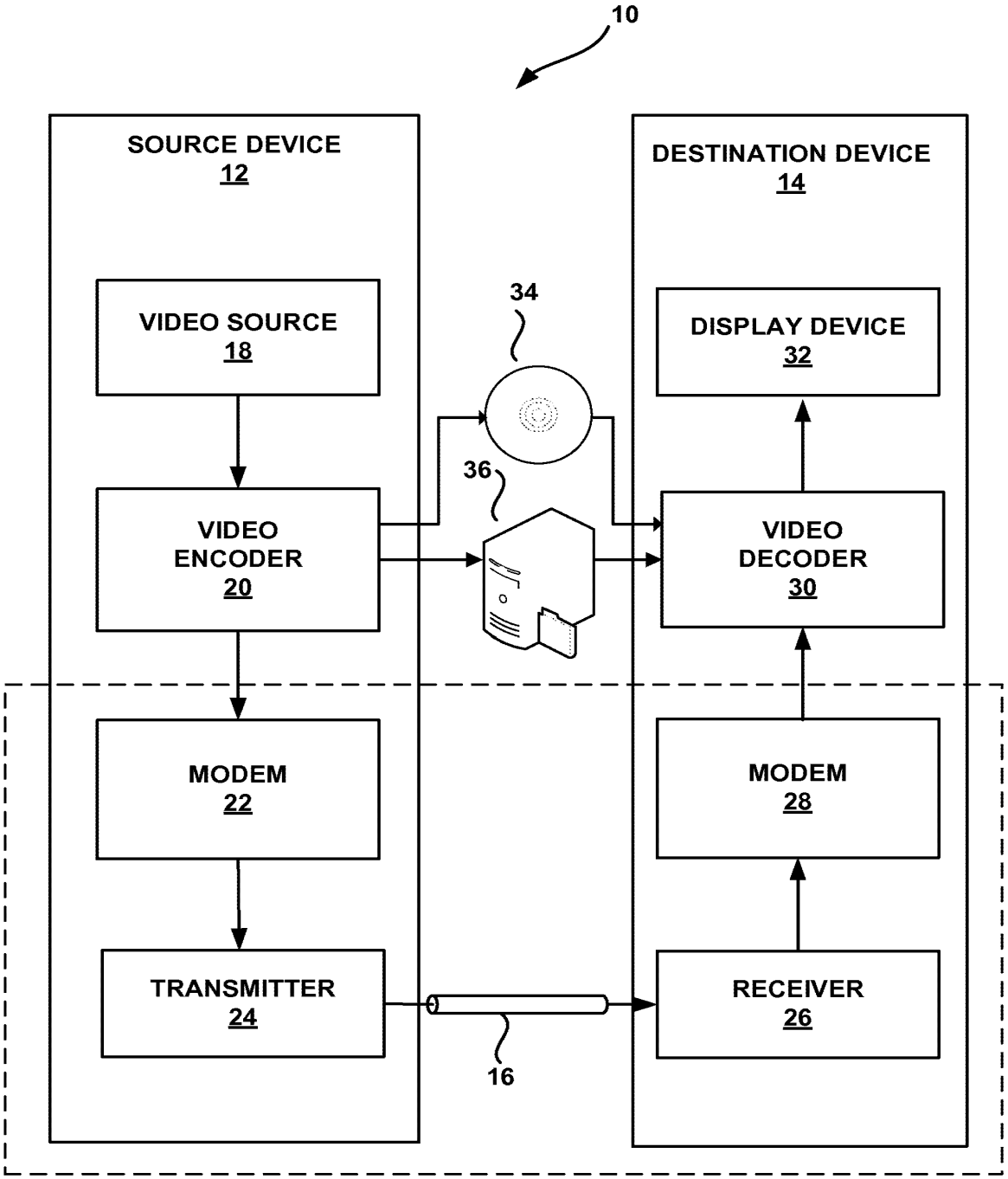
10
SOURCE DEVICE
12
DESTINATION DEVICE
14
VIDEO SOURCE
18
34
DISPLAY DEVICE
32
36
VIDEO
ENCODER
20
VIDEO
DECODER
30
MODEM
22
MODEM
28
TRANSMITTER
24
RECEIVER
26
16

FIG. 5

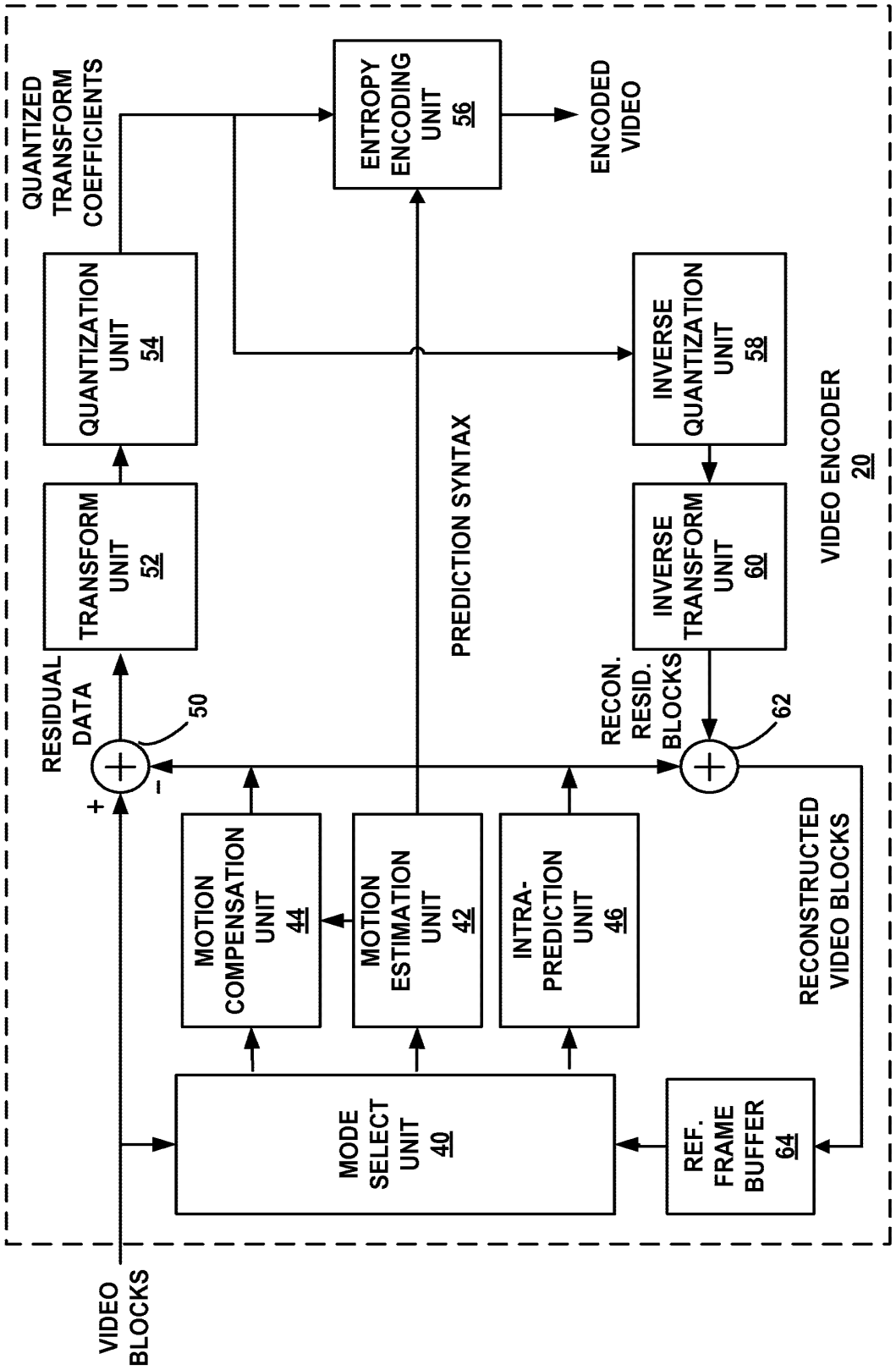
VIDEO BLOCKS
MODE SELECT UNIT 40
REF. FRAME BUFFER 64
MOTION COMPENSATION UNIT 44
MOTION ESTIMATION UNIT 42
INTRA-PREDICTION UNIT 46
RECONSTRUCTED VIDEO BLOCKS
+
-
50
RESIDUAL DATA
TRANSFORM UNIT 52
QUANTIZATION UNIT 54
QUANTIZED TRANSFORM COEFFICIENTS
PREDICTION SYNTAX
ENTROPY ENCODING UNIT 56
ENCODED VIDEO
INVERSE TRANSFORM UNIT 60
INVERSE QUANTIZATION UNIT 58
RECON. RESID. BLOCKS
62
VIDEO ENCODER 20

FIG. 6

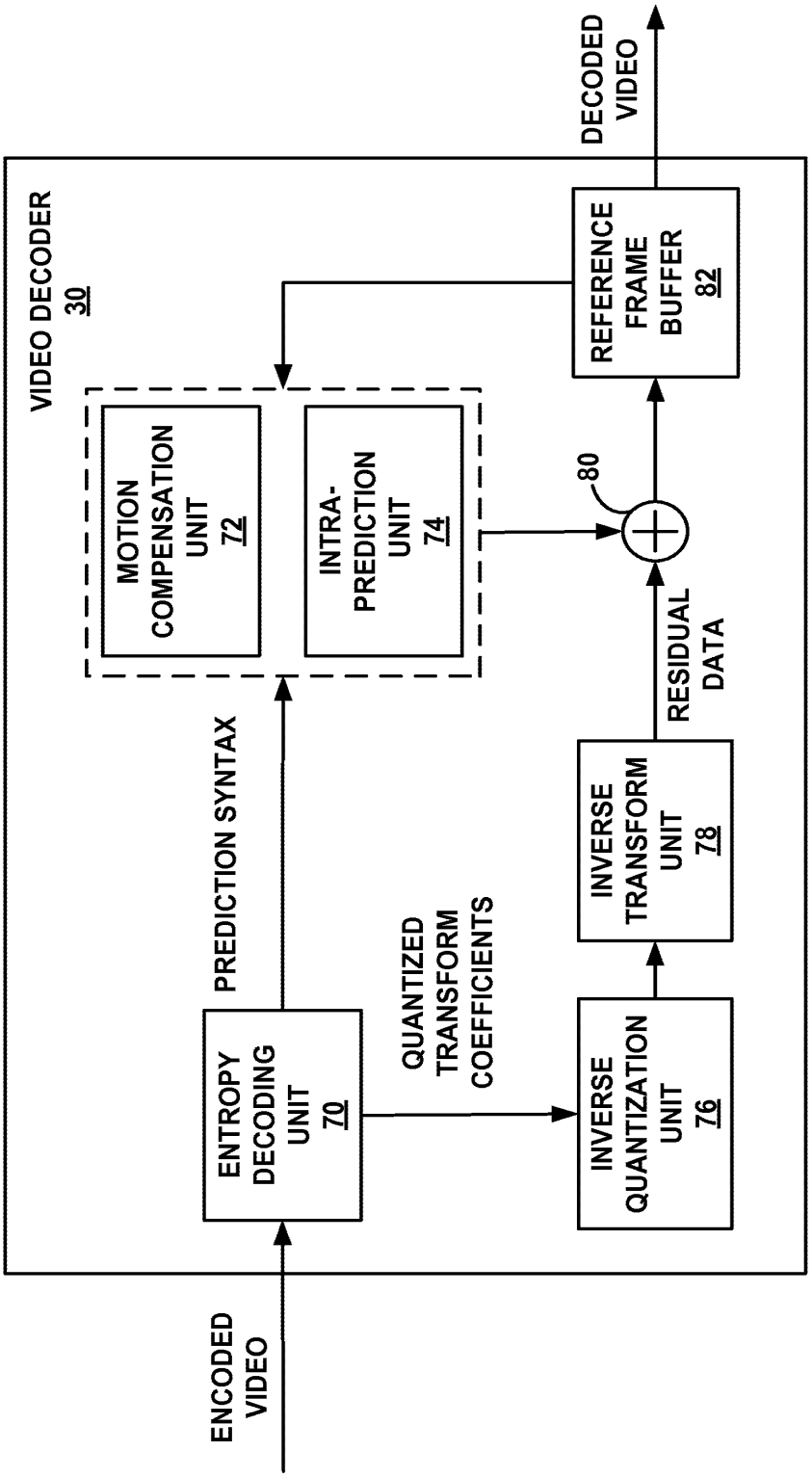
ENCODED VIDEO
VIDEO DECODER 30
ENTROPY DECODING UNIT 70
PREDICTION SYNTAX
MOTION COMPENSATION UNIT 72
INTRA-PREDICTION UNIT 74
QUANTIZED TRANSFORM COEFFICIENTS
INVERSE QUANTIZATION UNIT 76
INVERSE TRANSFORM UNIT 78
RESIDUAL DATA
80
REFERENCE FRAME BUFFER 82
DECODED VIDEO

FIG. 7

Under the Paperwork Reduction Act of 1995, no persons are required to respond to a collection of information unless it contains a valid OMB control number.

| Application Data Sheet 37 CFR 1.76 | Attorney Docket Number | 1010-893USP2/112573P2 |
|---|---|---|
| | Application Number | |
| Title of Invention | ROBUST MERGE CANDIDATE SELECTION | |

The application data sheet is part of the provisional or nonprovisional application for which it is being submitted. The following form contains the bibliographic data arranged in a format specified by the United States Patent and Trademark Office as outlined in 37 CFR 1.76.
This document may be completed electronically and submitted to the Office in electronic format using the Electronic Filing System (EFS) or the document may be printed and included in a paper filed application.

## Secrecy Order 37 CFR 5.2

☐ Portions or all of the application associated with this Application Data Sheet may fall under a Secrecy Order pursuant to 37 CFR 5.2 (Paper filers only. Applications that fall under Secrecy Order may not be filed electronically.)

## Applicant Information:

**Applicant 1** Remove

**Applicant Authority** ◉ Inventor ◯ Legal Representative under 35 U.S.C. 117 ◯ Party of Interest under 35 U.S.C. 118

| Prefix | Given Name | Middle Name | Family Name | Suffix |
|---|---|---|---|---|
| | Yunfei | | Zheng | |

**Residence Information (Select One)** ◉ US Residency ◯ Non US Residency ◯ Active US Military Service

| City | SAN DIEGO | State/Province | CA | Country of Residence i | US |
|---|---|---|---|---|---|

**Citizenship under 37 CFR 1.41(b)** i CN

**Mailing Address of Applicant:**

| | |
|---|---|
| Address 1 | 5775 MOREHOUSE DRIVE |
| Address 2 | |
| City | SAN DIEGO |
| State/Province | CA |
| Postal Code | 92121 |
| Country i | US |

**Applicant 2** Remove

**Applicant Authority** ◉ Inventor ◯ Legal Representative under 35 U.S.C. 117 ◯ Party of Interest under 35 U.S.C. 118

| Prefix | Given Name | Middle Name | Family Name | Suffix |
|---|---|---|---|---|
| | Xianglin | | Wang | |

**Residence Information (Select One)** ◉ US Residency ◯ Non US Residency ◯ Active US Military Service

| City | SAN DIEGO | State/Province | CA | Country of Residence i | US |
|---|---|---|---|---|---|

**Citizenship under 37 CFR 1.41(b)** i US

**Mailing Address of Applicant:**

| | |
|---|---|
| Address 1 | 5775 MOREHOUSE DRIVE |
| Address 2 | |
| City | SAN DIEGO |
| State/Province | CA |
| Postal Code | 92121 |
| Country i | US |

**Applicant 3** Remove

**Applicant Authority** ◉ Inventor ◯ Legal Representative under 35 U.S.C. 117 ◯ Party of Interest under 35 U.S.C. 118

| Prefix | Given Name | Middle Name | Family Name | Suffix |
|---|---|---|---|---|
| | Marta | | Karczewicz | |

**Residence Information (Select One)** ◉ US Residency ◯ Non US Residency ◯ Active US Military Service

| City | SAN DIEGO | State/Province | CA | Country of Residence i | US |
|---|---|---|---|---|---|



Amazon.com, Inc., Amazon.com Services LLC - Ex. 1056, Page 000009

PTO/SB/14 (07-07)
Approved for use through 06/30/2010. OMB 0651-0032
U.S. Patent and Trademark Office; U.S. DEPARTMENT OF COMMERCE
Under the Paperwork Reduction Act of 1995, no persons are required to respond to a collection of information unless it contains a valid OMB control number.

| **Application Data Sheet 37 CFR 1.76** | Attorney Docket Number | 1010-893USP2/112573P2 |
|---|---|---|
| | Application Number | |
| Title of Invention | ROBUST MERGE CANDIDATE SELECTION | |

| | | | |
|---|---|---|---|
| **Citizenship under 37 CFR 1.41(b)** [i] | US | | |
| **Mailing Address of Applicant:** | | | |
| **Address 1** | 5775 MOREHOUSE DRIVE | | |
| **Address 2** | | | |
| **City** | SAN DIEGO | **State/Province** | CA |
| **Postal Code** | 92121 | **Country**[i] | US |

All Inventors Must Be Listed - Additional Inventor Information blocks may be generated within this form by selecting the **Add** button. Add

## Correspondence Information:

**Enter either Customer Number or complete the Correspondence Information section below. For further information see 37 CFR 1.33(a).**

☐ **An Address is being provided for the correspondence Information of this application.**

| | | | |
|---|---|---|---|
| **Customer Number** | 15150 | | |
| **Email Address** | | Add Email | Remove Email |

## Application Information:

| | | | |
|---|---|---|---|
| **Title of the Invention** | ROBUST MERGE CANDIDATE SELECTION | | |
| **Attorney Docket Number** | 1010-893USP2/112573P2 | **Small Entity Status Claimed** | ☐ |
| **Application Type** | Provisional | | |
| **Subject Matter** | Utility | | |
| **Suggested Class (if any)** | | **Sub Class (if any)** | |
| **Suggested Technology Center (if any)** | | | |
| **Total Number of Drawing Sheets (if any)** | 7 | **Suggested Figure for Publication (if any)** | |

## Publication Information:

☐ Request Early Publication (Fee required at time of Request 37 CFR 1.219)

☐ **Request Not to Publish.** I hereby request that the attached application not be published under 35 U.S.C. 122(b) and certify that the invention disclosed in the attached application **has not and will not** be the subject of an application filed in another country, or under a multilateral international agreement, that requires publication at eighteen months after filing.

## Representative Information:

Representative information should be provided for all practitioners having a power of attorney in the application. Providing this information in the Application Data Sheet does not constitute a power of attorney in the application (see 37 CFR 1.32). Enter either Customer Number or complete the Representative Name section below. If both sections are completed the Customer Number will be used for the Representative Information during processing.

| | | | |
|---|---|---|---|
| Please Select One: | ◉ Customer Number | ○ US Patent Practitioner | ○ Limited Recognition (37 CFR 11.9) |

Under the Paperwork Reduction Act of 1995, no persons are required to respond to a collection of information unless it contains a valid OMB control number.

| **Application Data Sheet 37 CFR 1.76** | Attorney Docket Number | 1010-893USP2/112573P2 |
|---|---|---|
| | Application Number | |
| Title of Invention | ROBUST MERGE CANDIDATE SELECTION | |

| Customer Number | 15150 |
|---|---|

## Domestic Benefit/National Stage Information:

This section allows for the applicant to either claim benefit under 35 U.S.C. 119(e), 120, 121, or 365(c) or indicate National Stage entry from a PCT application. Providing this information in the application data sheet constitutes the specific reference required by 35 U.S.C. 119(e) or 120, and 37 CFR 1.78(a)(2) or CFR 1.78(a)(4), and need not otherwise be made part of the specification.

| Prior Application Status | | | Remove |
|---|---|---|---|
| Application Number | Continuity Type | Prior Application Number | Filing Date (YYYY-MM-DD) |
| | | | |

Additional Domestic Benefit/National Stage Data may be generated within this form by selecting the **Add** button. Add

## Foreign Priority Information:

This section allows for the applicant to claim benefit of foreign priority and to identify any prior foreign application for which priority is not claimed. Providing this information in the application data sheet constitutes the claim for priority as required by 35 U.S.C. 119(b) and 37 CFR 1.55(a).

Remove

| Application Number | Country [i] | Parent Filing Date (YYYY-MM-DD) | Priority Claimed |
|---|---|---|---|
| | | | ○ Yes ◉ No |

Additional Foreign Priority Data may be generated within this form by selecting the **Add** button. Add

## Assignee Information:

Providing this information in the application data sheet does not substitute for compliance with any requirement of part 3 of Title 37 of the CFR to have an assignment recorded in the Office.

**Assignee 1** Remove

If the Assignee is an Organization check here. ☒

| Organization Name | QUALCOMM Incorporated | | |
|---|---|---|---|
| **Mailing Address Information:** | | | |
| **Address 1** | 5775 Morehouse Drive | | |
| Address 2 | | | |
| **City** | San Diego | **State/Province** | CA |
| **Country** [i] | US | Postal Code | 92121 |
| Phone Number | | Fax Number | |
| Email Address | | | |

Additional Assignee Data may be generated within this form by selecting the **Add** button. Add

## Signature:

A signature of the applicant or representative is required in accordance with 37 CFR 1.33 and 10.18. Please see 37 CFR 1.4(d) for the form of the signature.

Under the Paperwork Reduction Act of 1995, no persons are required to respond to a collection of information unless it contains a valid OMB control number.

| **Application Data Sheet 37 CFR 1.76** | Attorney Docket Number | 1010-893USP2/112573P2 |
|---|---|---|
| | Application Number | |
| Title of Invention | ROBUST MERGE CANDIDATE SELECTION | |

| **Signature** | /Matthew J. Evans/ | | | Date (YYYY-MM-DD) | 2011-10-04 |
|---|---|---|---|---|---|
| First Name | Matthew J. | Last Name | Evans | Registration Number | 56530 |

This collection of information is required by 37 CFR 1.76. The information is required to obtain or retain a benefit by the public which is to file (and by the USPTO to process) an application. Confidentiality is governed by 35 U.S.C. 122 and 37 CFR 1.14. This collection is estimated to take 23 minutes to complete, including gathering, preparing, and submitting the completed application data sheet form to the USPTO. Time will vary depending upon the individual case. Any comments on the amount of time you require to complete this form and/or suggestions for reducing this burden, should be sent to the Chief Information Officer, U.S. Patent and Trademark Office, U.S. Department of Commerce, P.O. Box 1450, Alexandria, VA 22313-1450. DO NOT SEND FEES OR COMPLETED FORMS TO THIS ADDRESS. **SEND TO: Commissioner for Patents, P.O. Box 1450, Alexandria, VA 22313-1450.**

# Privacy Act Statement

The Privacy Act of 1974 (P.L. 93-579) requires that you be given certain information in connection with your submission of the attached form related to a patent application or patent. Accordingly, pursuant to the requirements of the Act, please be advised that: (1) the general authority for the collection of this information is 35 U.S.C. 2(b)(2); (2) furnishing of the information solicited is voluntary; and (3) the principal purpose for which the information is used by the U.S. Patent and Trademark Office is to process and/or examine your submission related to a patent application or patent. If you do not furnish the requested information, the U.S. Patent and Trademark Office may not be able to process and/or examine your submission, which may result in termination of proceedings or abandonment of the application or expiration of the patent.

The information provided by you in this form will be subject to the following routine uses:

1. The information on this form will be treated confidentially to the extent allowed under the Freedom of Information Act (5 U.S.C. 552) and the Privacy Act (5 U.S.C. 552a). Records from this system of records may be disclosed to the Department of Justice to determine whether the Freedom of Information Act requires disclosure of these records.

2. A record from this system of records may be disclosed, as a routine use, in the course of presenting evidence to a court, magistrate, or administrative tribunal, including disclosures to opposing counsel in the course of settlement negotiations.

3. A record in this system of records may be disclosed, as a routine use, to a Member of Congress submitting a request involving an individual, to whom the record pertains, when the individual has requested assistance from the Member with respect to the subject matter of the record.

4. A record in this system of records may be disclosed, as a routine use, to a contractor of the Agency having need for the information in order to perform a contract. Recipients of information shall be required to comply with the requirements of the Privacy Act of 1974, as amended, pursuant to 5 U.S.C. 552a(m).

5. A record related to an International Application filed under the Patent Cooperation Treaty in this system of records may be disclosed, as a routine use, to the International Bureau of the World Intellectual Property Organization, pursuant to the Patent Cooperation Treaty.

6. A record in this system of records may be disclosed, as a routine use, to another federal agency for purposes of National Security review (35 U.S.C. 181) and for review pursuant to the Atomic Energy Act (42 U.S.C. 218(c)).

7. A record from this system of records may be disclosed, as a routine use, to the Administrator, General Services, or his/her designee, during an inspection of records conducted by GSA as part of that agency's responsibility to recommend improvements in records management practices and programs, under authority of 44 U.S.C. 2904 and 2906. Such disclosure shall be made in accordance with the GSA regulations governing inspection of records for this purpose, and any other relevant (i.e., GSA or Commerce) directive. Such disclosure shall not be used to make determinations about individuals.

8. A record from this system of records may be disclosed, as a routine use, to the public after either publication of the application pursuant to 35 U.S.C. 122(b) or issuance of a patent pursuant to 35 U.S.C. 151. Further, a record may be disclosed, subject to the limitations of 37 CFR 1.14, as a routine use, to the public if the record was filed in an application which became abandoned or in which the proceedings were terminated and which application is referenced by either a published application, an application open to public inspections or an issued patent.

9. A record from this system of records may be disclosed, as a routine use, to a Federal, State, or local law enforcement agency, if the USPTO becomes aware of a violation or potential violation of law or regulation.

# ROBUST MERGE CANDIDATE SELECTION

## TECHNICAL FIELD

**[0001]** This disclosure relates to techniques for inter-prediction in a video coding process, and more particularly to techniques for selecting merge candidates in a motion vector prediction process.

## BACKGROUND

**[0002]** Digital video capabilities can be incorporated into a wide range of devices, including digital televisions, digital direct broadcast systems, wireless broadcast systems, personal digital assistants (PDAs), laptop or desktop computers, digital cameras, digital recording devices, digital media players, video gaming devices, video game consoles, cellular or satellite radio telephones, video teleconferencing devices, and the like. Digital video devices implement video compression techniques, such as those described in the standards defined by MPEG-2, MPEG-4, ITU-T H.263, ITU-T H.264/MPEG-4, Part 10, Advanced Video Coding (AVC), the High Efficiency Video Coding (HEVC) standard presently under development, and extensions of such standards, to transmit, receive and store digital video information more efficiently.

**[0003]** Video compression techniques include spatial prediction and/or temporal prediction to reduce or remove redundancy inherent in video sequences. For block-based video coding, a video frame or slice may be partitioned into blocks. Each block can be further partitioned. Blocks in an intra-coded (I) frame or slice are encoded using spatial prediction with respect to reference samples in neighboring blocks in the same frame or slice. Blocks in an inter-coded (P or B) frame or slice may use spatial prediction with respect to reference samples in neighboring blocks in the same frame or slice or temporal prediction with respect to reference samples in other reference frames. Spatial or temporal prediction results in a predictive block for a block to be coded. Residual data represents pixel differences between the original block to be coded and the predictive block.

**[0004]** An inter-coded block is encoded according to a motion vector that points to a block of reference samples forming the predictive block, and the residual data indicating the difference between the coded block and the predictive block. An intra-coded block



Amazon.com, Inc., Amazon.com Services LLC - Ex. 1056, Page 000014

is encoded according to an intra-coding mode and the residual data. For further compression, the residual data may be transformed from the pixel domain to a transform domain, resulting in residual transform coefficients, which then may be quantized. The quantized transform coefficients, initially arranged in a two-dimensional array, may be scanned in a particular order to produce a one-dimensional vector of transform coefficients for entropy coding.

## SUMMARY

**[0005]** In general, this disclosure describes techniques for coding video data. In particular, this disclosure describes techniques for selecting merge candidates in a motion vector prediction process.

**[0006]** According to one example of the disclosure, a method of selecting a merge candidate in an inter-prediction process is disclosed. The method includes performing a motion search process for a first partition of a block of video data to determine a first motion vector, selecting a merge candidate for the first partition of the block based on the first motion vector, the first merge candidate selected from a first set of partition merge candidates, an determining a second set of partition merge candidates for a second partition of the block based on the selected merge candidate for the first partition.

**[0007]** The details of one or more examples are set forth in the accompanying drawings and the description below. Other features, objects, and advantages will be apparent from the description and drawings, and from the claims.

## BRIEF DESCRIPTION OF DRAWINGS

**[0008]** FIG. 1 is a conceptual diagram illustrating candidate blocks for merge mode in a motion vector prediction process.

**[0009]** FIG. 2 is a conceptual diagram of example prediction unit partitions.

**[0010]** FIG. 3 is a conceptual diagram illustrating candidate blocks for merge mode in a motion vector prediction process for a Nx2N partition.

**[0011]** FIG. 4 is a conceptual diagram illustrating candidate blocks for merge mode in a motion vector prediction process for a 2NxN partition.

**[0012]** FIG. 5 is a block diagram illustrating an example video encoding and decoding system.



Amazon.com, Inc., Amazon.com Services LLC - Ex. 1056, Page 000015

**[0013]** FIG. 6 is a block diagram illustrating an example video encoder.

**[0014]** FIG. 7 is a block diagram illustrating an example video decoder.

## DETAILED DESCRIPTION

**[0015]** In general, this disclosure describes techniques for coding video data. This disclosure describes techniques for selecting merge candidates in a motion vector prediction process.

**[0016]** Digital video devices implement video compression techniques to transmit and receive digital video information more efficiently. Video compression may apply spatial (intra-frame) prediction and/or temporal (inter-frame) prediction techniques to reduce or remove redundancy inherent in video sequences.

**[0017]** For video coding according to the high efficiency video coding (HEVC) standard currently under development, a video frame may be partitioned into coding units, prediction units and transform units. A coding unit (CU) generally refers to an image region that serves as a basic unit to which various coding tools are applied for video compression. A coding unit is typically rectangular, and may be considered to be similar to a so-called macroblock, e.g., under other video coding standards such as ITU-T H.264.

**[0018]** To achieve better coding efficiency, a coding unit may have variable sizes depending on video content. In addition, a coding unit may be split into smaller blocks for prediction or transform. In particular, each coding unit may be further partitioned into prediction units and transform units. Prediction units may be considered to be similar to so-called partitions under other video coding standards, such as H.264. Transform units refer to blocks of residual data to which a transform is applied to produce transform coefficients.

**[0019]** A coding unit usually has one luminance component, denoted as Y, and two chroma components, denoted as U and V. Depending on the video sampling format, the size of the U and V components, in terms of number of samples, may be the same as or different from the size of the Y component.

**[0020]** To code a block (e.g., a prediction unit (PU) of video data), a predictor for the block is first derived. The predictor can be derived either through intra (I) prediction (i.e. spatial prediction) or inter (P or B) prediction (i.e. temporal prediction). Hence, some prediction units may be intra-coded (I) using spatial prediction with respect to



Amazon.com, Inc., Amazon.com Services LLC - Ex. 1056, Page 000016

neighbouring reference blocks in the same frame, and other prediction units may be inter-coded (P or B) with respect to reference blocks in other frames.

**[0021]** Upon identification of a predictor, the difference between the original video data block and its predictor is calculated. This difference is also called the prediction residual, and refers to the pixel differences between the block to the coded and the reference block, i.e., predictor. To achieve better compression, the prediction residual is generally transformed, e.g., using a discrete cosine transform (DCT), integer transform, Karhunen-Loeve (K-L) transform, or other transform.

**[0022]** Coding a PU using inter-prediction involves calculating a motion vector between a current block and a block in a reference frame. Motion vectors are calculated through a process called motion estimation (or motion search). A motion vector, for example, may indicate the displacement of a prediction unit in a current frame relative to a reference sample of a reference frame. A reference sample may be a block that is found to closely match the portion of the CU including the PU being coded in terms of pixel difference, which may be determined by sum of absolute difference (SAD), sum of squared difference (SSD), or other difference metrics. The reference sample may occur anywhere within a reference frame or reference slice, and not necessarily at a block (e.g., coding unit) boundary of the reference frame or slice. In some examples, the boundary of the reference sample may occur at a fractional pixel position.

**[0023]** In some instances, rather than signal the entire motion vector calculated by the motion estimation process, an encoder may predict a motion vector for each block. In performing this motion vector prediction, the encoder may select a set of candidate motion vectors determined for spatially neighboring PUs in the same frame as the current PU or a candidate motion vector determined for a co-located PU in another reference frame. The encoder may perform motion vector prediction rather than signal an entire motion vector to reduce complexity and bit rate in signaling. For example, the encoder may signal an index identifying a PU to be used for motion vector prediction, or the decoder may infer a particular PU to be used for motion vector prediction. The index may correspond to a candidate index that is an index into a set of candidates, e.g., candidates for a motion vector predictor.

**[0024]** Two different modes or types of motion vector prediction are typically used. One mode is referred to as a "merge" mode. In merge mode, the encoder instructs a decoder, through bitstream signaling of prediction syntax, to copy a motion vector, reference index (identifying a reference frame, in a given reference picture list, to which



Amazon.com, Inc., Amazon.com Services LLC - Ex. 1056, Page 000017

the motion vector points) and the motion prediction direction (which identifies the reference picture list, i.e., in terms of whether the reference frame temporally precedes or follows the currently frame) from a selected candidate motion vector for a current PU of the frame. This is accomplished by signaling in the bitstream an index identifying the candidate PU having the selected candidate motion vector. Thus, this index may also be referred to as a candidate index that is an index into a set of merge candidates.

**[0025]** Thus, for merge mode, the prediction syntax may include a flag identifying the mode (in this case "merge" mode) and an index identifying the location of the candidate PU. In some instances, the candidate PU will be a causal PU in reference to the current PU. That is, the candidate PU will have already been decoded by the decoder. As such, the decoder has already received and/or determined the motion vector, reference index, and motion prediction direction for the candidate PU. In this case, the decoder may simply retrieve the motion vector, reference index, and motion prediction direction associated with the candidate block from memory and copy these values for the current block.

**[0026]** FIG. 1 shows an example of the PUs (or portions/blocks of PUs) that are used as potential merge candidates for the merge mode in HEVC; L: left block, A: above block, BL: bottom left, RA: right above, T: temporal block (from other frame)

**[0027]** Currently, as proposed for HEVC, for 2NxN, Nx2N, and NxN partition modes (see FIG. 2), when using the merge mode for the last PU in a CU, the motion information of the merge candidates will be compared with the previous PU(s) in one CU to avoid the whole block using the same motion information. This is to avoid duplication with the 2Nx2N partition mode. Referring to the 2NxN example of FIG. 2, when using merge mode on partition 1, merge candidate A will not be considered as it is within partition 0. This is because, for partition 0 of the 2NxN case, merge candidates A, L and RA are in the exact same place as they would be for the 2Nx2N partition mode. Likewise, for the Nx2N example of FIG. 2, when using merge mode on partition 1, merge candidate L will not be used as it is within partition 0.

**[0028]** In general, the restriction on merge candidates is as follows:

1) 2NxN/Nx2N cases: if a merge candidate for the second PU has the same motion information as that of the first PU, that merge candidate will be set as not available.
2) NxN case:



Amazon.com, Inc., Amazon.com Services LLC - Ex. 1056, Page 000018

a. PU_0 and PU1 have same motion information, if merge candidate of PU_3 has same motion information as PU_2, the merge candidate is set to unavailable;
b. PU_0 and PU2 have same motion information, if merge candidate of PU_3 has same motion information as PU_1, the merge candidate is set to unavailable.

**[0029]** The comparison of neighboring motion information in this manner may cause a parsing issue. For example, if the previous PU inherits motion information from a previous block (e.g., as a result of being inter-prediction coded in merge mode), motion vector information may be lost if the previous block is corrupted or lost during transmission. As such, this may impact the total number of available merge candidates, making for a less than optimal merge mode. Furthermore, the restriction on merge candidates may eliminate some candidates where duplication of the 2Nx2N mode is not at issue.

**[0030]** In this disclosure, techniques for selecting merge candidates in a motion vector prediction process are disclosed that address the aforementioned problems. In one example, this disclosure proposes utilizing all potential merge candidates in the set shown in FIG. 1 for partition 1 in the Nx2N and 2NxN partition modes, when partition 0 in the particular partition mode uses a merge candidate that is not duplicative of a merge candidate that would be used in the 2Nx2N partition mode. In another example, for the NxN partition mode, all merge candidates are used regardless of any use by a previous partition.

**[0031]** **Error! Reference source not found.** and **Error! Reference source not found.** show the merge candidates for PUs in partition mode Nx2N and 2NxN, respectively. The rules for using the merge candidates for each mode are as follows:

1. Nx2N partition mode: The Left (L) candidate of PU_1 is available if the Merge index used for PU_0 is RA or T; otherwise L is not used (contrasted with the current HEVC proposal, where L is never used for PU_1)

2. 2NxN partition mode: The Above (A) candidate of PU_1 is available if the Merge index used for PU_0 is BL or T; otherwise A is not used (contrasted with the current HEVC proposal, where A is never used for PU_1).



Amazon.com, Inc., Amazon.com Services LLC - Ex. 1056, Page 000019

3. NxN partition mode: All prediction candidates of all PUs are considered as valid

**[0032]** In the Nx2N example, utilizing merge candidate L for partition 1 does not become duplicative of the 2Nx2N partition mode, because merge candidates RA or T for partition 0 would not necessarily be used for the 2Nx2N partition. Likewise, in the 2NxN example, utilizing merge candidate A for partition 1 does not become duplicative of the 2Nx2N partition mode, because merge candidates BL or T for partition 0 would not necessarily be used for the 2Nx2N partition.

**[0033]** FIG. 5 is a block diagram illustrating an example video encoding and decoding system 10 that may be configured to utilize techniques for selecting merge candidates in a motion vector prediction process in accordance with examples of this disclosure. As shown in FIG. 5, the system 10 includes a source device 12 that transmits encoded video to a destination device 14 via a communication channel 16. Encoded video data may also be stored on a storage medium 34 or a file server 36 and may be accessed by the destination device 14 as desired. When stored to a storage medium or file server, video encoder 20 may provide coded video data to another device, such as a network interface, a compact disc (CD), Blu-ray or digital video disc (DVD) burner or stamping facility device, or other devices, for storing the coded video data to the storage medium. Likewise, a device separate from video decoder 30, such as a network interface, CD or DVD reader, or the like, may retrieve coded video data from a storage medium and provided the retrieved data to video decoder 30.

**[0034]** The source device 12 and the destination device 14 may comprise any of a wide variety of devices, including desktop computers, notebook (i.e., laptop) computers, tablet computers, set-top boxes, telephone handsets such as so-called smartphones, televisions, cameras, display devices, digital media players, video gaming consoles, or the like. In many cases, such devices may be equipped for wireless communication. Hence, the communication channel 16 may comprise a wireless channel, a wired channel, or a combination of wireless and wired channels suitable for transmission of encoded video data. Similarly, the file server 36 may be accessed by the destination device 14 through any standard data connection, including an Internet connection. This may include a wireless channel (e.g., a Wi-Fi connection), a wired connection (e.g., DSL, cable modem, etc.), or a combination of both that is suitable for accessing encoded video data stored on a file server.



Amazon.com, Inc., Amazon.com Services LLC - Ex. 1056, Page 000020

**[0035]** Techniques for selecting merge candidates in a motion vector prediction process, in accordance with examples of this disclosure, may be applied to video coding in support of any of a variety of multimedia applications, such as over-the-air television broadcasts, cable television transmissions, satellite television transmissions, streaming video transmissions, e.g., via the Internet, encoding of digital video for storage on a data storage medium, decoding of digital video stored on a data storage medium, or other applications. In some examples, the system 10 may be configured to support one-way or two-way video transmission to support applications such as video streaming, video playback, video broadcasting, and/or video telephony.

**[0036]** In the example of FIG. 5, the source device 12 includes a video source 18, a video encoder 20, a modulator/demodulator 22 and a transmitter 24. In the source device 12, the video source 18 may include a source such as a video capture device, such as a video camera, a video archive containing previously captured video, a video feed interface to receive video from a video content provider, and/or a computer graphics system for generating computer graphics data as the source video, or a combination of such sources. As one example, if the video source 18 is a video camera, the source device 12 and the destination device 14 may form so-called camera phones or video phones. However, the techniques described in this disclosure may be applicable to video coding in general, and may be applied to wireless and/or wired applications, or application in which encoded video data is stored on a local disk.

**[0037]** The captured, pre-captured, or computer-generated video may be encoded by the video encoder 20. The encoded video information may be modulated by the modem 22 according to a communication standard, such as a wireless communication protocol, and transmitted to the destination device 14 via the transmitter 24. The modem 22 may include various mixers, filters, amplifiers or other components designed for signal modulation. The transmitter 24 may include circuits designed for transmitting data, including amplifiers, filters, and one or more antennas.

**[0038]** The captured, pre-captured, or computer-generated video that is encoded by the video encoder 20 may also be stored onto a storage medium 34 or a file server 36 for later consumption. The storage medium 34 may include Blu-ray discs, DVDs, CD-ROMs, flash memory, or any other suitable digital storage media for storing encoded video. The encoded video stored on the storage medium 34 may then be accessed by the destination device 14 for decoding and playback.



Amazon.com, Inc., Amazon.com Services LLC - Ex. 1056, Page 000021

**[0039]** The file server 36 may be any type of server capable of storing encoded video and transmitting that encoded video to the destination device 14. Example file servers include a web server (e.g., for a website), an FTP server, network attached storage (NAS) devices, a local disk drive, or any other type of device capable of storing encoded video data and transmitting it to a destination device. The transmission of encoded video data from the file server 36 may be a streaming transmission, a download transmission, or a combination of both. The file server 36 may be accessed by the destination device 14 through any standard data connection, including an Internet connection. This may include a wireless channel (e.g., a Wi-Fi connection), a wired connection (e.g., DSL, cable modem, Ethernet, USB, etc.), or a combination of both that is suitable for accessing encoded video data stored on a file server.

**[0040]** The destination device 14, in the example of FIG. 5, includes a receiver 26, a modem 28, a video decoder 30, and a display device 32. The receiver 26 of the destination device 14 receives information over the channel 16, and the modem 28 demodulates the information to produce a demodulated bitstream for the video decoder 30. The information communicated over the channel 16 may include a variety of syntax information generated by the video encoder 20 for use by the video decoder 30 in decoding video data. Such syntax may also be included with the encoded video data stored on the storage medium 34 or the file server 36. Each of the video encoder 20 and the video decoder 30 may form part of a respective encoder-decoder (CODEC) that is capable of encoding or decoding video data.

**[0041]** The display device 32 may be integrated with, or external to, the destination device 14. In some examples, the destination device 14 may include an integrated display device and also be configured to interface with an external display device. In other examples, the destination device 14 may be a display device. In general, the display device 32 displays the decoded video data to a user, and may comprise any of a variety of display devices such as a liquid crystal display (LCD), a plasma display, an organic light emitting diode (OLED) display, or another type of display device.

**[0042]** In the example of FIG. 5, the communication channel 16 may comprise any wireless or wired communication medium, such as a radio frequency (RF) spectrum or one or more physical transmission lines, or any combination of wireless and wired media. The communication channel 16 may form part of a packet-based network, such as a local area network, a wide-area network, or a global network such as the Internet. The communication channel 16 generally represents any suitable communication



Amazon.com, Inc., Amazon.com Services LLC - Ex. 1056, Page 000022

medium, or collection of different communication media, for transmitting video data from the source device 12 to the destination device 14, including any suitable combination of wired or wireless media. The communication channel 16 may include routers, switches, base stations, or any other equipment that may be useful to facilitate communication from the source device 12 to the destination device 14.

**[0043]** The video encoder 20 and the video decoder 30 may operate according to a video compression standard, such as the High Efficiency Video Coding (HEVC) standard presently under development, and may conform to the HEVC Test Model (HM). Alternatively, the video encoder 20 and the video decoder 30 may operate according to other proprietary or industry standards, such as the ITU-T H.264 standard, alternatively referred to as MPEG-4, Part 10, Advanced Video Coding (AVC), or extensions of such standards. The techniques of this disclosure, however, are not limited to any particular coding standard. Other examples include MPEG-2 and ITU-T H.263.

**[0044]** Although not shown in FIG. 5, in some aspects, the video encoder 20 and the video decoder 30 may each be integrated with an audio encoder and decoder, and may include appropriate MUX-DEMUX units, or other hardware and software, to handle encoding of both audio and video in a common data stream or separate data streams. If applicable, in some examples, MUX-DEMUX units may conform to the ITU H.223 multiplexer protocol, or other protocols such as the user datagram protocol (UDP).

**[0045]** The video encoder 20 and the video decoder 30 each may be implemented as any of a variety of suitable encoder circuitry, such as one or more microprocessors, digital signal processors (DSPs), application specific integrated circuits (ASICs), field programmable gate arrays (FPGAs), discrete logic, software, hardware, firmware or any combinations thereof. When the techniques are implemented partially in software, a device may store instructions for the software in a suitable, non-transitory computer-readable medium and execute the instructions in hardware using one or more processors to perform the techniques of this disclosure. Each of the video encoder 20 and the video decoder 30 may be included in one or more encoders or decoders, either of which may be integrated as part of a combined encoder/decoder (CODEC) in a respective device.

**[0046]** The video encoder 20 may implement any or all of the techniques of this disclosure for selecting merge candidates in a motion vector prediction process. Likewise, the video decoder 30 may implement any or all of these techniques selecting merge candidates in a motion vector prediction process. A video coder, as described in



Amazon.com, Inc., Amazon.com Services LLC - Ex. 1056, Page 000023

this disclosure, may refer to a video encoder or a video decoder. Similarly, a video coding unit may refer to a video encoder or a video decoder. Likewise, video coding may refer to video encoding or video decoding.

**[0047]** FIG. 6 is a block diagram illustrating an example of a video encoder 20 that may use techniques for selecting merge candidates in a motion vector prediction process as described in this disclosure. The video encoder 20 will be described in the context of HEVC coding for purposes of illustration, but without limitation of this disclosure as to other coding standards or methods. The video encoder 20 may perform intra- and inter-coding of CUs within video frames. Intra-coding relies on spatial prediction to reduce or remove spatial redundancy in video data within a given video frame. Inter-coding relies on temporal prediction to reduce or remove temporal redundancy between a current frame and previously coded frames of a video sequence. Intra-mode (I-mode) may refer to any of several spatial-based video compression modes. Inter-modes such as uni-directional prediction (P-mode) or bi-directional prediction (B-mode) may refer to any of several temporal-based video compression modes.

**[0048]** As shown in FIG. 6, the video encoder 20 receives a current video block within a video frame to be encoded. In the example of FIG. 6, the video encoder 20 includes a motion compensation unit 44, a motion estimation unit 42, an intra-prediction unit 46, a reference frame buffer 64, a summer 50, a transform unit 52, a quantization unit 54, and an entropy encoding unit 56. The transform unit 52 illustrated in FIG. 6 is the unit that applies the actual transform or combinations of transform to a block of residual data, and is not to be confused with block of transform coefficients, which also may be referred to as a transform unit (TU) of a CU. For video block reconstruction, the video encoder 20 also includes an inverse quantization unit 58, an inverse transform unit 60, and a summer 62. A deblocking filter (not shown in FIG. 4) may also be included to filter block boundaries to remove blockiness artifacts from reconstructed video. If desired, the deblocking filter would typically filter the output of the summer 62.

**[0049]** During the encoding process, the video encoder 20 receives a video frame or slice to be coded. The frame or slice may be divided into multiple video blocks, e.g., largest coding units (LCUs). The motion estimation unit 42 and the motion compensation unit 44 perform inter-predictive coding of the received video block relative to one or more blocks in one or more reference frames to provide temporal compression. The intra-prediction unit 46 may perform intra-predictive coding of the



Amazon.com, Inc., Amazon.com Services LLC - Ex. 1056, Page 000024

received video block relative to one or more neighboring blocks in the same frame or slice as the block to be coded to provide spatial compression.

**[0050]** The mode select unit 40 may select one of the coding modes, intra or inter, e.g., based on error (i.e., distortion) results for each mode, and provides the resulting intra- or inter-predicted block (e.g., a prediction unit (PU)) to the summer 50 to generate residual block data and to the summer 62 to reconstruct the encoded block for use in a reference frame. Summer 62 combines the predicted block with inverse quantized, inverse transformed data from inverse transform unit 60 for the block to reconstruct the encoded block, as described in greater detail below. Some video frames may be designated as I-frames, where all blocks in an I-frame are encoded in an intra-prediction mode. In some cases, the intra-prediction unit 46 may perform intra-prediction encoding of a block in a P- or B-frame, e.g., when motion search performed by the motion estimation unit 42 does not result in a sufficient prediction of the block.

**[0051]** The motion estimation unit 42 and the motion compensation unit 44 may be highly integrated, but are illustrated separately for conceptual purposes. Motion estimation (or motion search) is the process of generating motion vectors, which estimate motion for video blocks. A motion vector, for example, may indicate the displacement of a prediction unit in a current frame relative to a reference sample of a reference frame. The motion estimation unit 42 calculates a motion vector for a prediction unit of an inter-coded frame by comparing the prediction unit to reference samples of a reference frame stored in the reference frame buffer 64. A reference sample may be a block that is found to closely match the portion of the CU including the PU being coded in terms of pixel difference, which may be determined by sum of absolute difference (SAD), sum of squared difference (SSD), or other difference metrics. The reference sample may occur anywhere within a reference frame or reference slice, and not necessarily at a block (e.g., coding unit) boundary of the reference frame or slice. In some examples, the reference sample may occur at a fractional pixel position.

**[0052]** The motion estimation unit 42 sends the calculated motion vector to the entropy encoding unit 56 and the motion compensation unit 44. In particular, the motion estimation unit 42 may utilize the above-described merge candidates to signal the motion vector according to a merge mode (i.e., signal the index of a neighbor block from which to copy a motion vector). The portion of the reference frame identified by a motion vector may be referred to as a reference sample. The motion compensation unit



Amazon.com, Inc., Amazon.com Services LLC - Ex. 1056, Page 000025

44 may calculate a prediction value for a prediction unit of a current CU, e.g., by retrieving the reference sample identified by a motion vector for the PU.

**[0053]** The intra-prediction unit 46 may intra-predict the received block, as an alternative to inter-prediction performed by the motion estimation unit 42 and the motion compensation unit 44. The intra-prediction unit 46 may predict the received block relative to neighboring, previously coded blocks, e.g., blocks above, above and to the right, above and to the left, or to the left of the current block, assuming a left-to-right, top-to-bottom encoding order for blocks. The intra-prediction unit 46 may be configured with a variety of different intra-prediction modes. For example, the intra-prediction unit 46 may be configured with a certain number of directional prediction modes, e.g., thirty-five directional prediction modes, based on the size of the CU being encoded.

**[0054]** The intra-prediction unit 46 may select an intra-prediction mode by, for example, calculating error values for various intra-prediction modes and selecting a mode that yields the lowest error value. Directional prediction modes may include functions for combining values of spatially neighboring pixels and applying the combined values to one or more pixel positions in a PU. Once values for all pixel positions in the PU have been calculated, the intra-prediction unit 46 may calculate an error value for the prediction mode based on pixel differences between the PU and the received block to be encoded. The intra-prediction unit 46 may continue testing intra-prediction modes until an intra-prediction mode that yields an acceptable error value is discovered. The intra-prediction unit 46 may then send the PU to the summer 50.

**[0055]** The video encoder 20 forms a residual block by subtracting the prediction data calculated by the motion compensation unit 44 or the intra-prediction unit 46 from the original video block being coded. The summer 50 represents the component or components that perform this subtraction operation. The residual block may correspond to a two-dimensional matrix of pixel difference values, where the number of values in the residual block is the same as the number of pixels in the PU corresponding to the residual block. The values in the residual block may correspond to the differences, i.e., error, between values of co-located pixels in the PU and in the original block to be coded. The differences may be chroma or luma differences depending on the type of block that is coded.

**[0056]** The transform unit 52 may form one or more transform units (TUs) from the residual block. The transform unit 52 selects a transform from among a plurality of



Amazon.com, Inc., Amazon.com Services LLC - Ex. 1056, Page 000026

transforms. The transform may be selected based on one or more coding characteristics, such as block size, coding mode, or the like. The transform unit 52 then applies the selected transform to the TU, producing a video block comprising a two-dimensional array of transform coefficients. In addition, the transform unit 52 may signal the selected transform partition in the encoded video bitstream.

**[0057]** The transform unit 52 may send the resulting transform coefficients to the quantization unit 54. The quantization unit 54 may then quantize the transform coefficients. The entropy encoding unit 56 may then perform a scan of the quantized transform coefficients in the matrix according to a scanning mode. This disclosure describes the entropy encoding unit 56 as performing the scan. However, it should be understood that, in other examples, other processing units, such as the quantization unit 54, could perform the scan.

**[0058]** Once the transform coefficients are scanned into the one-dimensional array, the entropy encoding unit 56 may apply entropy coding such as CAVLC, CABAC, syntax-based context-adaptive binary arithmetic coding (SBAC), or another entropy coding methodology to the coefficients.

**[0059]** To perform CAVLC, the entropy encoding unit 56 may select a variable length code for a symbol to be transmitted. Codewords in VLC may be constructed such that relatively shorter codes correspond to more likely symbols, while longer codes correspond to less likely symbols. In this way, the use of VLC may achieve a bit savings over, for example, using equal-length codewords for each symbol to be transmitted.

**[0060]** To perform CABAC, the entropy encoding unit 56 may select a context model to apply to a certain context to encode symbols to be transmitted. The context may relate to, for example, whether neighboring values are non-zero or not. The entropy encoding unit 56 may also entropy encode syntax elements, such as the signal representative of the selected transform. Following the entropy coding by the entropy encoding unit 56, the resulting encoded video may be transmitted to another device, such as the video decoder 30, or archived for later transmission or retrieval.

**[0061]** In some cases, the entropy encoding unit 56 or another unit of the video encoder 20 may be configured to perform other coding functions, in addition to entropy coding. For example, the entropy encoding unit 56 may be configured to determine coded block pattern (CBP) values for CU's and PU's. Also, in some cases, the entropy encoding unit 56 may perform run length coding of coefficients.



Amazon.com, Inc., Amazon.com Services LLC - Ex. 1056, Page 000027

**[0062]** The inverse quantization unit 58 and the inverse transform unit 60 apply inverse quantization and inverse transformation, respectively, to reconstruct the residual block in the pixel domain, e.g., for later use as a reference block. The motion compensation unit 44 may calculate a reference block by adding the residual block to a predictive block of one of the frames of the reference frame buffer 64. The motion compensation unit 44 may also apply one or more interpolation filters to the reconstructed residual block to calculate sub-integer pixel values for use in motion estimation. The summer 62 adds the reconstructed residual block to the motion compensated prediction block produced by the motion compensation unit 44 to produce a reconstructed video block for storage in the reference frame buffer 64. The reconstructed video block may be used by the motion estimation unit 42 and the motion compensation unit 44 as a reference block to inter-code a block in a subsequent video frame.

**[0063]** FIG. 7 is a block diagram illustrating an example of a video decoder 30, which decodes an encoded video sequence. In the example of FIG. 7, the video decoder 30 includes an entropy decoding unit 70, a motion compensation unit 72, an intra-prediction unit 74, an inverse quantization unit 76, an inverse transformation unit 78, a reference frame buffer 82 and a summer 80. The video decoder 30 may, in some examples, perform a decoding pass generally reciprocal to the encoding pass described with respect to the video encoder 20 (see FIG. 6).

**[0064]** The entropy decoding unit 70 performs an entropy decoding process on the encoded bitstream to retrieve a one-dimensional array of transform coefficients. The entropy decoding process used depends on the entropy coding used by the video encoder 20 (e.g., CABAC, CAVLC, etc.). The entropy coding process used by the encoder may be signaled in the encoded bitstream or may be a predetermined process.

**[0065]** In some examples, the entropy decoding unit 70 (or the inverse quantization unit 76) may scan the received values using a scan mirroring the scanning mode used by the entropy encoding unit 56 (or the quantization unit 54) of the video encoder 20. Although the scanning of coefficients may be performed in the inverse quantization unit 76, scanning will be described for purposes of illustration as being performed by the entropy decoding unit 70. In addition, although shown as separate functional units for ease of illustration, the structure and functionality of the entropy decoding unit 70, the inverse quantization unit 76, and other units of the video decoder 30 may be highly integrated with one another.



Amazon.com, Inc., Amazon.com Services LLC - Ex. 1056, Page 000028

**[0066]** The inverse quantization unit 76 inverse quantizes, i.e., de-quantizes, the quantized transform coefficients provided in the bitstream and decoded by the entropy decoding unit 70. The inverse quantization process may include a conventional process, e.g., similar to the processes proposed for HEVC or defined by the H.264 decoding standard. The inverse quantization process may include use of a quantization parameter QP calculated by the video encoder 20 for the CU to determine a degree of quantization and, likewise, a degree of inverse quantization that should be applied. The inverse quantization unit 76 may inverse quantize the transform coefficients either before or after the coefficients are converted from a one-dimensional array to a two-dimensional array.

**[0067]** The inverse transform unit 78 applies an inverse transform to the inverse quantized transform coefficients. In some examples, the inverse transform unit 78 may determine an inverse transform based on signaling from the video encoder 20, or by inferring the transform from one or more coding characteristics such as block size, coding mode, or the like. In some examples, the inverse transform unit 78 may determine a transform to apply to the current block based on a signaled transform at the root node of a quadtree for an LCU including the current block. Alternatively, the transform may be signaled at the root of a TU quadtree for a leaf-node CU in the LCU quadtree. In some examples, the inverse transform unit 78 may apply a cascaded inverse transform, in which inverse transform unit 78 applies two or more inverse transforms to the transform coefficients of the current block being decoded.

**[0068]** In addition, the inverse transform unit may apply the inverse transform to produce a transform unit partition in accordance with the above-described techniques of this disclosure.

**[0069]** The intra-prediction unit 74 may generate prediction data for a current block of a current frame based on a signaled intra-prediction mode and data from previously decoded blocks of the current frame.

**[0070]** Based on the retrieved motion prediction direction, reference frame index, and calculated current motion vector (e.g., a motion vector copied from a neighboring block according to a merge mode), the motion compensation unit produces a motion compensated block for the current portion. These motion compensated blocks essentially recreate the predictive block used to produce the residual data.

**[0071]** The motion compensation unit 72 may produce the motion compensated blocks, possibly performing interpolation based on interpolation filters. Identifiers for



Amazon.com, Inc., Amazon.com Services LLC - Ex. 1056, Page 000029

interpolation filters to be used for motion estimation with sub-pixel precision may be included in the syntax elements. The motion compensation unit 72 may use interpolation filters as used by the video encoder 20 during encoding of the video block to calculate interpolated values for sub-integer pixels of a reference block. The motion compensation unit 72 may determine the interpolation filters used by the video encoder 20 according to received syntax information and use the interpolation filters to produce predictive blocks.

**[0072]** Additionally, the motion compensation unit 72 and the intra-prediction unit 74, in an HEVC example, may use some of the syntax information (e.g., provided by a quadtree) to determine sizes of LCUs used to encode frame(s) of the encoded video sequence. The motion compensation unit 72 and the intra-prediction unit 74 may also use syntax information to determine split information that describes how each CU of a frame of the encoded video sequence is split (and likewise, how sub-CUs are split). The syntax information may also include modes indicating how each split is encoded (e.g., intra- or inter-prediction, and for intra-prediction an intra-prediction encoding mode), one or more reference frames (and/or reference lists containing identifiers for the reference frames) for each inter-encoded PU, and other information to decode the encoded video sequence.

**[0073]** The summer 80 combines the residual blocks with the corresponding prediction blocks generated by the motion compensation unit 72 or the intra-prediction unit 74 to form decoded blocks. If desired, a deblocking filter may also be applied to filter the decoded blocks in order to remove blockiness artifacts. The decoded video blocks are then stored in the reference frame buffer 82, which provides reference blocks for subsequent motion compensation and also produces decoded video for presentation on a display device (such as the display device 32 of FIG. 5).

**[0074]** In one or more examples, the functions described may be implemented in hardware, software, firmware, or any combination thereof. If implemented in software, the functions may be stored on or transmitted over, as one or more instructions or code, a computer-readable medium and executed by a hardware-based processing unit. Computer-readable media may include computer-readable storage media, which corresponds to a tangible medium such as data storage media, or communication media including any medium that facilitates transfer of a computer program from one place to another, e.g., according to a communication protocol. In this manner, computer-readable media generally may correspond to (1) tangible computer-readable storage



Amazon.com, Inc., Amazon.com Services LLC - Ex. 1056, Page 000030

media which is non-transitory or (2) a communication medium such as a signal or carrier wave. Data storage media may be any available media that can be accessed by one or more computers or one or more processors to retrieve instructions, code and/or data structures for implementation of the techniques described in this disclosure. A computer program product may include a computer-readable medium.

**[0075]** By way of example, and not limitation, such computer-readable storage media can comprise RAM, ROM, EEPROM, CD-ROM or other optical disk storage, magnetic disk storage, or other magnetic storage devices, flash memory, or any other medium that can be used to store desired program code in the form of instructions or data structures and that can be accessed by a computer. Also, any connection is properly termed a computer-readable medium. For example, if instructions are transmitted from a website, server, or other remote source using a coaxial cable, fiber optic cable, twisted pair, digital subscriber line (DSL), or wireless technologies such as infrared, radio, and microwave, then the coaxial cable, fiber optic cable, twisted pair, DSL, or wireless technologies such as infrared, radio, and microwave are included in the definition of medium. It should be understood, however, that computer-readable storage media and data storage media do not include connections, carrier waves, signals, or other transient media, but are instead directed to non-transient, tangible storage media. Disk and disc, as used herein, includes compact disc (CD), laser disc, optical disc, digital versatile disc (DVD), floppy disk and Blu-ray disc, where disks usually reproduce data magnetically, while discs reproduce data optically with lasers. Combinations of the above should also be included within the scope of computer-readable media.

**[0076]** Instructions may be executed by one or more processors, such as one or more digital signal processors (DSPs), general purpose microprocessors, application specific integrated circuits (ASICs), field programmable logic arrays (FPGAs), or other equivalent integrated or discrete logic circuitry. Accordingly, the term "processor," as used herein may refer to any of the foregoing structure or any other structure suitable for implementation of the techniques described herein. In addition, in some aspects, the functionality described herein may be provided within dedicated hardware and/or software modules configured for encoding and decoding, or incorporated in a combined codec. Also, the techniques could be fully implemented in one or more circuits or logic elements.

**[0077]** The techniques of this disclosure may be implemented in a wide variety of devices or apparatuses, including a wireless handset, an integrated circuit (IC) or a set of



Amazon.com, Inc., Amazon.com Services LLC - Ex. 1056, Page 000031

ICs (e.g., a chip set). Various components, modules, or units are described in this disclosure to emphasize functional aspects of devices configured to perform the disclosed techniques, but do not necessarily require realization by different hardware units. Rather, as described above, various units may be combined in a codec hardware unit or provided by a collection of interoperative hardware units, including one or more processors as described above, in conjunction with suitable software and/or firmware.

**[0078]** Various examples have been described. These and other examples are within the scope of the following claims.



Amazon.com, Inc., Amazon.com Services LLC - Ex. 1056, Page 000032

**WHAT IS CLAIMED IS:**

1. A method of selecting a merge candidate in an inter-prediction process, the method comprising:

performing a motion search process for a first partition of a block of video data to determine a first motion vector;

selecting a merge candidate for the first partition of the block based on the first motion vector, the first merge candidate selected from a first set of partition merge candidates; and

determining a second set of partition merge candidates for a second partition of the block based on the selected merge candidate for the first partition.

2. The method of claim1, wherein the first set of partition merge candidates includes an above merge candidate, a left merge candidate, a right above merge candidate, a below left merge candidate, and a temporal merge candidate.

3. The method of claim 2, wherein the first partition and the second partition are defined according to an Nx2N partition mode of the block,

wherein the second set of partition merge candidates includes the above merge candidate, the left merge candidate, the right above merge candidate, the below left merge candidate, and the temporal merge candidate in the case that the selected merge candidate for the first partition is the right above merge candidate or the temporal merge candidate, and

wherein the second set of partition merge candidates includes the above merge candidate, the right above merge candidate, the below left merge candidate, and the temporal merge candidate in the case that the selected merge candidate for the first partition is the above merge candidate, left merge candidate or the below left merge candidate.



Amazon.com, Inc., Amazon.com Services LLC - Ex. 1056, Page 000033

4. The method of claim 2, wherein the first partition and the second partition are defined according to a 2NxN partition mode of the block,

wherein the second set of partition merge candidates includes the above merge candidate, the left merge candidate, the right above merge candidate, the below left merge candidate, and the temporal merge candidate in the case that the selected merge candidate for the first partition is the below left merge candidate or the temporal merge candidate, and

wherein the second set of partition merge candidates includes the left merge candidate, the right above merge candidate, the below left merge candidate, and the temporal merge candidate in the case that the selected merge candidate for the first partition is the above merge candidate, left merge candidate or the right above merge candidate.

5. The method of claim 2, wherein the first partition and the second partition are defined according to an NxN partition mode of the block,

wherein the second set of partition merge candidates includes an above merge candidate, a left merge candidate, a right above merge candidate, a below left merge candidate, and a temporal merge candidate.

6. A video encoder configured to perform the methods of claims 1-5.

7. An apparatus configured to select a merge candidate in an inter-prediction process, the method comprising:

means for performing a motion search process for a first partition of a block of video data to determine a first motion vector;

means for selecting a merge candidate for the first partition of the block based on the first motion vector, the first merge candidate selected from a first set of partition merge candidates; and

means for determining a second set of partition merge candidates for a second partition of the block based on the selected merge candidate for the first partition.

8. The apparatus of claim 7, wherein the first set of partition merge candidates includes an above merge candidate, a left merge candidate, a right above merge candidate, a below left merge candidate, and a temporal merge candidate.



Amazon.com, Inc., Amazon.com Services LLC - Ex. 1056, Page 000034

9. The apparatus of claim 8, wherein the first partition and the second partition are defined according to a Nx2N partition mode of the block,

wherein the second set of partition merge candidates includes the above merge candidate, the left merge candidate, the right above merge candidate, the below left merge candidate, and the temporal merge candidate in the case that the selected merge candidate for the first partition is the right above merge candidate or the temporal merge candidate, and

wherein the second set of partition merge candidates includes the above merge candidate, the right above merge candidate, the below left merge candidate, and the temporal merge candidate in the case that the selected merge candidate for the first partition is the above merge candidate, left merge candidate or the below left merge candidate.

10. The apparatus of claim 8, wherein the first partition and the second partition are defined according to a 2NxN partition mode of the block,

wherein the second set of partition merge candidates includes the above merge candidate, the left merge candidate, the right above merge candidate, the below left merge candidate, and the temporal merge candidate in the case that the selected merge candidate for the first partition is the below left merge candidate or the temporal merge candidate, and

wherein the second set of partition merge candidates includes the left merge candidate, the right above merge candidate, the below left merge candidate, and the temporal merge candidate in the case that the selected merge candidate for the first partition is the above merge candidate, left merge candidate or the right above merge candidate.

11. The apparatus of claim 8, wherein the first partition and the second partition are defined according to an NxN partition mode of the block,

wherein the second set of partition merge candidates includes an above merge candidate, a left merge candidate, a right above merge candidate, a below left merge candidate, and a temporal merge candidate.



Amazon.com, Inc., Amazon.com Services LLC - Ex. 1056, Page 000035

12. A method of selecting a merge candidate in an inter-prediction process, the method comprising:

receiving a merge candidate index for the first partition of the block based on the first motion vector, the first merge candidate index pointing to a merge candidate selected from a first set of partition merge candidates; and

determining a second set of partition merge candidates for a second partition of the block based on the received merge candidate index for the first partition.

13. The method of claim12, wherein the first set of partition merge candidates includes an above merge candidate, a left merge candidate, a right above merge candidate, a below left merge candidate, and a temporal merge candidate.

14. The method of claim 13, wherein the first partition and the second partition are defined according to an Nx2N partition mode of the block,

wherein the second set of partition merge candidates includes the above merge candidate, the left merge candidate, the right above merge candidate, the below left merge candidate, and the temporal merge candidate in the case that the received merge candidate index for the first partition is the right above merge candidate or the temporal merge candidate, and

wherein the second set of partition merge candidates includes the above merge candidate, the right above merge candidate, the below left merge candidate, and the temporal merge candidate in the case that the received merge candidate index for the first partition is the above merge candidate, left merge candidate or the below left merge candidate.



Amazon.com, Inc., Amazon.com Services LLC - Ex. 1056, Page 000036

15. The method of claim 13, wherein the first partition and the second partition are defined according to a 2NxN partition mode of the block,

wherein the second set of partition merge candidates includes the above merge candidate, the left merge candidate, the right above merge candidate, the below left merge candidate, and the temporal merge candidate in the case that the received merge candidate index for the first partition is the below left merge candidate or the temporal merge candidate, and

wherein the second set of partition merge candidates includes the left merge candidate, the right above merge candidate, the below left merge candidate, and the temporal merge candidate in the case the received merge candidate index for the first partition is the above merge candidate, left merge candidate or the right above merge candidate.

16. The method of claim 13, wherein the first partition and the second partition are defined according to an NxN partition mode of the block,

wherein the second set of partition merge candidates includes an above merge candidate, a left merge candidate, a right above merge candidate, a below left merge candidate, and a temporal merge candidate.

17. A video decoder configured to perform the methods of claims 12-16.

18. An apparatus of selecting a merge candidate in an inter-prediction process, the method comprising:

receiving a merge candidate index for the first partition of the block based on the first motion vector, the first merge candidate index pointing to a merge candidate selected from a first set of partition merge candidates; and

determining a second set of partition merge candidates for a second partition of the block based on the received merge candidate index for the first partition.

19. The apparatus of claim18, wherein the first set of partition merge candidates includes an above merge candidate, a left merge candidate, a right above merge candidate, a below left merge candidate, and a temporal merge candidate.



Amazon.com, Inc., Amazon.com Services LLC - Ex. 1056, Page 000037

20. The apparatus of claim 19, wherein the first partition and the second partition are defined according to an Nx2N partition mode of the block,

wherein the second set of partition merge candidates includes the above merge candidate, the left merge candidate, the right above merge candidate, the below left merge candidate, and the temporal merge candidate in the case that the received merge candidate index for the first partition is the right above merge candidate or the temporal merge candidate, and

wherein the second set of partition merge candidates includes the above merge candidate, the right above merge candidate, the below left merge candidate, and the temporal merge candidate in the case that the received merge candidate index for the first partition is the above merge candidate, left merge candidate or the below left merge candidate.

21. The apparatus of claim 19, wherein the first partition and the second partition are defined according to a 2NxN partition mode of the block,

wherein the second set of partition merge candidates includes the above merge candidate, the left merge candidate, the right above merge candidate, the below left merge candidate, and the temporal merge candidate in the case that the received merge candidate index for the first partition is the below left merge candidate or the temporal merge candidate, and

wherein the second set of partition merge candidates includes the left merge candidate, the right above merge candidate, the below left merge candidate, and the temporal merge candidate in the case the received merge candidate index for the first partition is the above merge candidate, left merge candidate or the right above merge candidate.

22. The apparatus of claim 19, wherein the first partition and the second partition are defined according to an NxN partition mode of the block,

wherein the second set of partition merge candidates includes an above merge candidate, a left merge candidate, a right above merge candidate, a below left merge candidate, and a temporal merge candidate.



Amazon.com, Inc., Amazon.com Services LLC - Ex. 1056, Page 000038

## ABSTRACT

A method of selecting a merge candidate in an inter-prediction process is disclosed. The method includes performing a motion search process for a first partition of a block of video data to determine a first motion vector, selecting a merge candidate for the first partition of the block based on the first motion vector, the first merge candidate selected from a first set of partition merge candidates, an determining a second set of partition merge candidates for a second partition of the block based on the selected merge candidate for the first partition.



Amazon.com, Inc., Amazon.com Services LLC - Ex. 1056, Page 000039

# Electronic Patent Application Fee Transmittal

| | |
|---|---|
| **Application Number:** | |
| **Filing Date:** | |
| **Title of Invention:** | ROBUST MERGE CANDIDATE SELECTION |
| **First Named Inventor/Applicant Name:** | Yunfei Zheng |
| **Filer:** | Brian Raymond Dawley/Karen Sorensen |
| **Attorney Docket Number:** | 1010-893USP2/112573P2 |

Filed as Large Entity

## Provisional Filing Fees

| Description | Fee Code | Quantity | Amount | Sub-Total in USD($) |
|---|---|---|---|---|
| **Basic Filing:** | | | | |
| Provisional application filing | 1005 | 1 | 250 | 250 |
| **Pages:** | | | | |
| **Claims:** | | | | |
| **Miscellaneous-Filing:** | | | | |
| **Petition:** | | | | |
| **Patent-Appeals-and-Interference:** | | | | |
| **Post-Allowance-and-Post-Issuance:** | | | | |
| **Extension-of-Time:** | | | | |

| Description | Fee Code | Quantity | Amount | Sub-Total in USD($) |
|---|---|---|---|---|
| **Miscellaneous:** | | | | |
| | | | **Total in USD ($)** | **250** |

# Electronic Acknowledgement Receipt

| | |
|---|---|
| **EFS ID:** | 11109216 |
| **Application Number:** | 61543059 |
| **International Application Number:** | |
| **Confirmation Number:** | 7062 |
| **Title of Invention:** | ROBUST MERGE CANDIDATE SELECTION |
| **First Named Inventor/Applicant Name:** | Yunfei Zheng |
| **Customer Number:** | 15150 |
| **Filer:** | Brian Raymond Dawley/Karen Sorensen |
| **Filer Authorized By:** | Brian Raymond Dawley |
| **Attorney Docket Number:** | 1010-893USP2/112573P2 |
| **Receipt Date:** | 04-OCT-2011 |
| **Filing Date:** | |
| **Time Stamp:** | 16:05:10 |
| **Application Type:** | Provisional |

## Payment information:

| | |
|---|---|
| Submitted with Payment | yes |
| Payment Type | Deposit Account |
| Payment was successfully received in RAM | $250 |
| RAM confirmation Number | 2424 |
| Deposit Account | 501778 |
| Authorized User | |
| The Director of the USPTO is hereby authorized to charge indicated fees and credit any overpayment as follows: | |
| Charge any Additional Fees required under 37 C.F.R. Section 1.21 (Miscellaneous fees and charges) | |

## File Listing:

| Document Number | Document Description | File Name | File Size(Bytes)/ Message Digest | Multi Part /.zip | Pages (if appl.) |
|---|---|---|---|---|---|
| 1 | Transmittal of New Application | Transmittal.pdf | 72558<br>57058b0220f402c858d00a05e5b7edfaea9b8273 | no | 1 |
| **Warnings:** | | | | | |
| **Information:** | | | | | |
| 2 | Drawings-only black and white line drawings | Drawings.pdf | 64093<br>450d95d179ea07069c9e2f2760f2fb2313e6e861 | no | 7 |
| **Warnings:** | | | | | |
| **Information:** | | | | | |
| 3 | Application Data Sheet | ADS.pdf | 836987<br>4292daf4d4ba960ed702e974a746622027eec1bd | no | 5 |
| **Warnings:** | | | | | |
| **Information:** | | | | | |
| 4 | | Application.pdf | 164999<br>aa074819a1136611d39d9ed9f39bcfa4d4d838eb | yes | 26 |

**Multipart Description/PDF files in .zip description**

| Document Description | Start | End |
|---|---|---|
| Specification | 1 | 19 |
| Claims | 20 | 25 |
| Abstract | 26 | 26 |

| | |
|---|---|
| **Warnings:** | |
| **Information:** | |
| 5 | Fee Worksheet (SB06) | fee-info.pdf | 29990<br>9f16c6c1358b7e208a185ce5bea2704702a309a0 | no | 2 |
| **Warnings:** | |
| **Information:** | |
| **Total Files Size (in bytes):** | 1168627 |

**This Acknowledgement Receipt evidences receipt on the noted date by the USPTO of the indicated documents, characterized by the applicant, and including page counts, where applicable. It serves as evidence of receipt similar to a Post Card, as described in MPEP 503.**

**New Applications Under 35 U.S.C. 111**
**If a new application is being filed and the application includes the necessary components for a filing date (see 37 CFR 1.53(b)-(d) and MPEP 506), a Filing Receipt (37 CFR 1.54) will be issued in due course and the date shown on this Acknowledgement Receipt will establish the filing date of the application.**

**National Stage of an International Application under 35 U.S.C. 371**
**If a timely submission to enter the national stage of an international application is compliant with the conditions of 35 U.S.C. 371 and other applicable requirements a Form PCT/DO/EO/903 indicating acceptance of the application as a national stage submission under 35 U.S.C. 371 will be issued in addition to the Filing Receipt, in due course.**

**New International Application Filed with the USPTO as a Receiving Office**
**If a new international application is being filed and the international application includes the necessary components for an international filing date (see PCT Article 11 and MPEP 1810), a Notification of the International Application Number and of the International Filing Date (Form PCT/RO/105) will be issued in due course, subject to prescriptions concerning national security, and the date shown on this Acknowledgement Receipt will establish the international filing date of the application.**

UNITED STATES PATENT AND TRADEMARK OFFICE

UNITED STATES DEPARTMENT OF COMMERCE
United States Patent and Trademark Office
Address: COMMISSIONER FOR PATENTS
P.O. Box 1450
Alexandria, Virginia 22313-1450
www.uspto.gov

| APPLICATION NUMBER | FILING or 371(c) DATE | GRP ART UNIT | FIL FEE REC'D | ATTY.DOCKET.NO | TOT CLAIMS | IND CLAIMS |
|---|---|---|---|---|---|---|
| 61/543,059 | 10/04/2011 | | 250 | 1010-893USP2/112573P2 | | |

**CONFIRMATION NO. 7062**

**FILING RECEIPT**

15150
Shumaker & Sieffert, P. A.
1625 Radio Drive, Suite 300
Woodbury, MN 55125

*OC000000050404122*

Date Mailed: 10/19/2011

Receipt is acknowledged of this provisional patent application. It will not be examined for patentability and will become abandoned not later than twelve months after its filing date. Any correspondence concerning the application must include the following identification information: the U.S. APPLICATION NUMBER, FILING DATE, NAME OF APPLICANT, and TITLE OF INVENTION. Fees transmitted by check or draft are subject to collection. Please verify the accuracy of the data presented on this receipt. **If an error is noted on this Filing Receipt, please submit a written request for a Filing Receipt Correction. Please provide a copy of this Filing Receipt with the changes noted thereon. If you received a "Notice to File Missing Parts" for this application, please submit any corrections to this Filing Receipt with your reply to the Notice. When the USPTO processes the reply to the Notice, the USPTO will generate another Filing Receipt incorporating the requested corrections**

**Applicant(s)**

Yunfei Zheng, SAN DIEGO, CA;
Xianglin Wang, SAN DIEGO, CA;
Marta Karczewicz, SAN DIEGO, CA;

**Power of Attorney:**
Matthew Evans--56530

**If Required, Foreign Filing License Granted:** 10/15/2011
The country code and number of your priority application, to be used for filing abroad under the Paris Convention, is **US 61/543,059**
**Projected Publication Date:** None, application is not eligible for pre-grant publication
**Non-Publication Request:** No
**Early Publication Request:** No
**Title**

ROBUST MERGE CANDIDATE SELECTION

## PROTECTING YOUR INVENTION OUTSIDE THE UNITED STATES

Since the rights granted by a U.S. patent extend only throughout the territory of the United States and have no effect in a foreign country, an inventor who wishes patent protection in another country must apply for a patent in a specific country or in regional patent offices. Applicants may wish to consider the filing of an international application under the Patent Cooperation Treaty (PCT). An international (PCT) application generally has the same effect as a regular national patent application in each PCT-member country. The PCT process **simplifies** the filing of patent applications on the same invention in member countries, but **does not result** in a grant of "an international

patent" and does not eliminate the need of applicants to file additional documents and fees in countries where patent protection is desired.

Almost every country has its own patent law, and a person desiring a patent in a particular country must make an application for patent in that country in accordance with its particular laws. Since the laws of many countries differ in various respects from the patent law of the United States, applicants are advised to seek guidance from specific foreign countries to ensure that patent rights are not lost prematurely.

Applicants also are advised that in the case of inventions made in the United States, the Director of the USPTO must issue a license before applicants can apply for a patent in a foreign country. The filing of a U.S. patent application serves as a request for a foreign filing license. The application's filing receipt contains further information and guidance as to the status of applicant's license for foreign filing.

Applicants may wish to consult the USPTO booklet, "General Information Concerning Patents" (specifically, the section entitled "Treaties and Foreign Patents") for more information on timeframes and deadlines for filing foreign patent applications. The guide is available either by contacting the USPTO Contact Center at 800-786-9199, or it can be viewed on the USPTO website at http://www.uspto.gov/web/offices/pac/doc/general/index.html.

For information on preventing theft of your intellectual property (patents, trademarks and copyrights), you may wish to consult the U.S. Government website, http://www.stopfakes.gov. Part of a Department of Commerce initiative, this website includes self-help "toolkits" giving innovators guidance on how to protect intellectual property in specific countries such as China, Korea and Mexico. For questions regarding patent enforcement issues, applicants may call the U.S. Government hotline at 1-866-999-HALT (1-866-999-4158).

## LICENSE FOR FOREIGN FILING UNDER

## Title 35, United States Code, Section 184

## Title 37, Code of Federal Regulations, 5.11 & 5.15

**GRANTED**

The applicant has been granted a license under 35 U.S.C. 184, if the phrase "IF REQUIRED, FOREIGN FILING LICENSE GRANTED" followed by a date appears on this form. Such licenses are issued in all applications where the conditions for issuance of a license have been met, regardless of whether or not a license may be required as set forth in 37 CFR 5.15. The scope and limitations of this license are set forth in 37 CFR 5.15(a) unless an earlier license has been issued under 37 CFR 5.15(b). The license is subject to revocation upon written notification. The date indicated is the effective date of the license, unless an earlier license of similar scope has been granted under 37 CFR 5.13 or 5.14.

This license is to be retained by the licensee and may be used at any time on or after the effective date thereof unless it is revoked. This license is automatically transferred to any related applications(s) filed under 37 CFR 1.53(d). This license is not retroactive.

The grant of a license does not in any way lessen the responsibility of a licensee for the security of the subject matter as imposed by any Government contract or the provisions of existing laws relating to espionage and the national security or the export of technical data. Licensees should apprise themselves of current regulations especially with respect to certain countries, of other agencies, particularly the Office of Defense Trade Controls, Department of State (with respect to Arms, Munitions and Implements of War (22 CFR 121-128)); the Bureau of Industry and

Security, Department of Commerce (15 CFR parts 730-774); the Office of Foreign AssetsControl, Department of Treasury (31 CFR Parts 500+) and the Department of Energy.

**NOT GRANTED**

No license under 35 U.S.C. 184 has been granted at this time, if the phrase "IF REQUIRED, FOREIGN FILING LICENSE GRANTED" DOES NOT appear on this form. Applicant may still petition for a license under 37 CFR 5.12, if a license is desired before the expiration of 6 months from the filing date of the application. If 6 months has lapsed from the filing date of this application and the licensee has not received any indication of a secrecy order under 35 U.S.C. 181, the licensee may foreign file the application pursuant to 37 CFR 5.15(b).