PATENT

IN THE UNITED STATES PATENT AND TRADEMARK OFFICE

First Named Inventor:	Yunfei Zheng		
Filed:	Herewith	Customer No.:	15150
Docket No.:	1212-009USP1/120469		
Title:	REMOVAL OF TRIVIAL MERGE CANDIDATES AND MERGE CANDIDATE COMPARISON		

REQUEST FOR PROVISIONAL APPLICATION UNDER 37 C.F.R. § 1.53(c)

Commissioner for Patents
Alexandria, VA 22313-1450

Dear Sir:

This is a request for filing a Provisional application for patent under 37 CFR § 1.53(c) entitled REMOVAL OF TRIVIAL MERGE CANDIDATES AND MERGE CANDIDATE COMPARISON.

1. ☒ Enclosed is the Provisional application for patent as follows: 21 pages of specification, and 6 sheets of drawings.

2. ☒ Payment of Provisional filing fee under 37 C.F.R. § 1.16(k):
   ☒ Please charge Deposit Account No. 50-1778 in the amount of $250.00.

3. ☒ The Commissioner is hereby authorized to charge any additional fees as set forth in 37 CFR §§ 1.16 to 1.18 which may be required by this paper or credit any overpayment to Deposit Account No. 50-1778.

4. ☒ Application Data Sheet

5. ☒ Address all future communications to Practitioners at Customer Number 15150.

Date: 7 November 2011 By: /Jeffrey R. Joseph
Name: Jeffrey R. Joseph, Reg. No. 54,204

SHUMAKER & SIEFFERT, P.A.
1625 Radio Drive, Suite 300
Woodbury, Minnesota 55125
Telephone: 651.286.8373
Facsimile: 651.735.1102

REMOVAL OF TRIVIAL MERGE CANDIDATES AND MERGE CANDIDATE COMPARISON

TECHNICAL FIELD

[0001] This disclosure relates to video coding.

BACKGROUND

[0002] Digital video capabilities can be incorporated into a wide range of devices, including digital televisions, digital direct broadcast systems, wireless broadcast systems, personal digital assistants (PDAs), laptop or desktop computers, tablet computers, e-book readers, digital cameras, digital recording devices, digital media players, video gaming devices, video game consoles, cellular or satellite radio telephones, so-called "smart phones," video teleconferencing devices, video streaming devices, and the like. Digital video devices implement video compression techniques, such as those described in the standards defined by MPEG-2, MPEG-4, ITU-T H.263, ITU-T H.264/MPEG-4, Part 10, Advanced Video Coding (AVC), the High Efficiency Video Coding (HEVC) standard presently under development, and extensions of such standards. The video devices may transmit, receive, encode, decode, and/or store digital video information more efficiently by implementing such video compression techniques.

[0003] Video compression techniques perform spatial (intra-picture) prediction and/or temporal (inter-picture) prediction to reduce or remove redundancy inherent in video sequences. For block-based video coding, a video slice (i.e., a video frame or a portion of a video frame) may be partitioned into video blocks, which may also be referred to as treeblocks, coding units (CUs) and/or coding nodes. Video blocks in an intra-coded (I) slice of a picture are encoded using spatial prediction with respect to reference samples in neighboring blocks in the same picture. Video blocks in an inter-coded (P or B) slice of a picture may use spatial prediction with respect to reference samples in neighboring blocks in the same picture or temporal prediction with respect to reference samples in other reference pictures. Pictures may be referred to as frames, and reference pictures may be referred to a reference frames.

[0004] Spatial or temporal prediction results in a predictive block for a block to be coded. Residual data represents pixel differences between the original block to be

Amazon.com, Inc., Amazon.com Services LLC - Ex. 1057, Page 000002

coded and the predictive block. An inter-coded block is encoded according to a motion vector that points to a block of reference samples forming the predictive block, and the residual data indicating the difference between the coded block and the predictive block. An intra-coded block is encoded according to an intra-coding mode and the residual data. For further compression, the residual data may be transformed from the pixel domain to a transform domain, resulting in residual transform coefficients, which then may be quantized. The quantized transform coefficients, initially arranged in a two-dimensional array, may be scanned in order to produce a one-dimensional vector of transform coefficients, and entropy coding may be applied to achieve even more compression.

BRIEF DESCRIPTION OF DRAWINGS

[0005] FIG. 1 is a block diagram illustrating an example video encoding and decoding system that may utilize the techniques described in this disclosure.

[0006] FIG. 2 is a block diagram illustrating an example video encoder that may implement the techniques described in this disclosure.

[0007] FIG. 3 is a block diagram illustrating an example video decoder that may implement the techniques described in this disclosure.

[0008] FIG. 4 shows an example of neighboring blocks that can be included in a candidate set of MRG mode.

[0009] FIG. 5 shows examples of prediction partition shapes and indexes.

[0010] FIG. 6 shows examples of merge candidate checking positions for PUs.

DETAILED DESCRIPTION

[0011] FIG. 1 is a block diagram illustrating an example video encoding and decoding system 10 that may utilize the techniques described in this disclosure. As shown in FIG. 1, system 10 includes a source device 12 that generates encoded video data to be decoded at a later time by a destination device 14. Source device 12 and destination device 14 may comprise any of a wide range of devices, including desktop computers, notebook (i.e., laptop) computers, tablet computers, set-top boxes, telephone handsets such as so-called “smart” phones, so-called “smart” pads, televisions, cameras, display devices, digital media players, video gaming consoles, video streaming device, or the

Amazon.com, Inc., Amazon.com Services LLC - Ex. 1057, Page 000003

like. In some cases, source device 12 and destination device 14 may be equipped for wireless communication.

[0012] Destination device 14 may receive the encoded video data to be decoded via a link 16. Link 16 may comprise any type of medium or device capable of moving the encoded video data from source device 12 to destination device 14. In one example, link 16 may comprise a communication medium to enable source device 12 to transmit encoded video data directly to destination device 14 in real-time. The encoded video data may be modulated according to a communication standard, such as a wireless communication protocol, and transmitted to destination device 14. The communication medium may comprise any wireless or wired communication medium, such as a radio frequency (RF) spectrum or one or more physical transmission lines. The communication medium may form part of a packet-based network, such as a local area network, a wide-area network, or a global network such as the Internet. The communication medium may include routers, switches, base stations, or any other equipment that may be useful to facilitate communication from source device 12 to destination device 14.

[0013] Alternatively, encoded data may be output from output interface 22 to a storage device 32. Similarly, encoded data may be accessed from storage device 32 by input interface. Storage device 32 may include any of a variety of distributed or locally accessed data storage media such as a hard drive, Blu-ray discs, DVDs, CD-ROMs, flash memory, volatile or non-volatile memory, or any other suitable digital storage media for storing encoded video data. In a further example, storage device 32 may correspond to a file server or another intermediate storage device that may hold the encoded video generated by source device 12. Destination device 14 may access stored video data from storage device 32 via streaming or download. The file server may be any type of server capable of storing encoded video data and transmitting that encoded video data to the destination device 14. Example file servers include a web server (e.g., for a website), an FTP server, network attached storage (NAS) devices, or a local disk drive. Destination device 14 may access the encoded video data through any standard data connection, including an Internet connection. This may include a wireless channel (e.g., a Wi-Fi connection), a wired connection (e.g., DSL, cable modem, etc.), or a combination of both that is suitable for accessing encoded video data stored on a file server. The transmission of encoded video data from storage device 32 may be a streaming transmission, a download transmission, or a combination of both.

Amazon.com, Inc., Amazon.com Services LLC - Ex. 1057, Page 000004

[0014] The techniques of this disclosure are not necessarily limited to wireless applications or settings. The techniques may be applied to video coding in support of any of a variety of multimedia applications, such as over-the-air television broadcasts, cable television transmissions, satellite television transmissions, streaming video transmissions, e.g., via the Internet, encoding of digital video for storage on a data storage medium, decoding of digital video stored on a data storage medium, or other applications. In some examples, system 10 may be configured to support one-way or two-way video transmission to support applications such as video streaming, video playback, video broadcasting, and/or video telephony.

[0015] In the example of FIG. 1, source device 12 includes a video source 18, video encoder 20 and an output interface 22. In some cases, output interface 22 may include a modulator/demodulator (modem) and/or a transmitter. In source device 12, video source 18 may include a source such as a video capture device, e.g., a video camera, a video archive containing previously captured video, a video feed interface to receive video from a video content provider, and/or a computer graphics system for generating computer graphics data as the source video, or a combination of such sources. As one example, if video source 18 is a video camera, source device 12 and destination device 14 may form so-called camera phones or video phones. However, the techniques described in this disclosure may be applicable to video coding in general, and may be applied to wireless and/or wired applications.

[0016] The captured, pre-captured, or computer-generated video may be encoded by video encoder 12. The encoded video data may be transmitted directly to destination device 14 via output interface 22 of source device 20. The encoded video data may also (or alternatively) be stored onto storage device 32 for later access by destination device 14 or other devices, for decoding and/or playback.

[0017] Destination device 14 includes an input interface 28, a video decoder 30, and a display device 32. In some cases, input interface 28 may include a receiver and/or a modem. Input interface 28 of destination device 14 receives the encoded video data over link 16. The encoded video data communicated over link 16, or provided on storage device 32, may include a variety of syntax elements generated by video encoder 20 for use by a video decoder, such as video decoder 30, in decoding the video data. Such syntax elements may be included with the encoded video data transmitted on a communication medium, stored on a storage medium, or stored a file server.

Amazon.com, Inc., Amazon.com Services LLC - Ex. 1057, Page 000005

[0018] Display device 32 may be integrated with, or external to, destination device 14. In some examples, destination device 14 may include an integrated display device and also be configured to interface with an external display device. In other examples, destination device 14 may be a display device. In general, display device 32 displays the decoded video data to a user, and may comprise any of a variety of display devices such as a liquid crystal display (LCD), a plasma display, an organic light emitting diode (OLED) display, or another type of display device.

[0019] Video encoder 20 and video decoder 30 may operate according to a video compression standard, such as the High Efficiency Video Coding (HEVC) standard presently under development, and may conform to the HEVC Test Model (HM). Alternatively, video encoder 20 and video decoder 30 may operate according to other proprietary or industry standards, such as the ITU-T H.264 standard, alternatively referred to as MPEG-4, Part 10, Advanced Video Coding (AVC), or extensions of such standards. The techniques of this disclosure, however, are not limited to any particular coding standard. Other examples of video compression standards include MPEG-2 and ITU-T H.263.

[0020] Although not shown in FIG. 1, in some aspects, video encoder 20 and video decoder 30 may each be integrated with an audio encoder and decoder, and may include appropriate MUX-DEMUX units, or other hardware and software, to handle encoding of both audio and video in a common data stream or separate data streams. If applicable, in some examples, MUX-DEMUX units may conform to the ITU H.223 multiplexer protocol, or other protocols such as the user datagram protocol (UDP).

[0021] Video encoder 20 and video decoder 30 each may be implemented as any of a variety of suitable encoder circuitry, such as one or more microprocessors, digital signal processors (DSPs), application specific integrated circuits (ASICs), field programmable gate arrays (FPGAs), discrete logic, software, hardware, firmware or any combinations thereof. When the techniques are implemented partially in software, a device may store instructions for the software in a suitable, non-transitory computer-readable medium and execute the instructions in hardware using one or more processors to perform the techniques of this disclosure. Each of video encoder 20 and video decoder 30 may be included in one or more encoders or decoders, either of which may be integrated as part of a combined encoder/decoder (CODEC) in a respective device.

[0022] The JCT-VC is working on development of the HEVC standard. The HEVC standardization efforts are based on an evolving model of a video coding device referred

Amazon.com, Inc., Amazon.com Services LLC - Ex. 1057, Page 000006

to as the HEVC Test Model (HM). The HM presumes several additional capabilities of video coding devices relative to existing devices according to, e.g., ITU-T H.264/AVC. For example, whereas H.264 provides nine intra-prediction encoding modes, the HM may provide as many as thirty-three intra-prediction encoding modes.

[0023] In general, the working model of the HM describes that a video frame or picture may be divided into a sequence of treeblocks or largest coding units (LCU) that include both luma and chroma samples. A treeblock has a similar purpose as a macroblock of the H.264 standard. A slice includes a number of consecutive treeblocks in coding order. A video frame or picture may be partitioned into one or more slices. Each treeblock may be split into coding units (CUs) according to a quadtree. For example, a treeblock, as a root node of the quadtree, may be split into four child nodes, and each child node may in turn be a parent node and be split into another four child nodes. A final, unsplit child node, as a leaf node of the quadtree, comprises a coding node, i.e., a coded video block. Syntax data associated with a coded bitstream may define a maximum number of times a treeblock may be split, and may also define a minimum size of the coding nodes.

[0024] A CU includes a coding node and prediction units (PUs) and transform units (TUs) associated with the coding node. A size of the CU corresponds to a size of the coding node and must be square in shape. The size of the CU may range from 8x8 pixels up to the size of the treeblock with a maximum of 64x64 pixels or greater. Each CU may contain one or more PUs and one or more TUs. Syntax data associated with a CU may describe, for example, partitioning of the CU into one or more PUs. Partitioning modes may differ between whether the CU is skip or direct mode encoded, intra-prediction mode encoded, or inter-prediction mode encoded. PUs may be partitioned to be non-square in shape. Syntax data associated with a CU may also describe, for example, partitioning of the CU into one or more TUs according to a quadtree. A TU can be square or non-square in shape.

[0025] The HEVC standard allows for transformations according to TUs, which may be different for different CUs. The TUs are typically sized based on the size of PUs within a given CU defined for a partitioned LCU, although this may not always be the case. The TUs are typically the same size or smaller than the PUs. In some examples, residual samples corresponding to a CU may be subdivided into smaller units using a quadtree structure known as "residual quad tree" (RQT). The leaf nodes of the RQT

Amazon.com, Inc., Amazon.com Services LLC - Ex. 1057, Page 000007

may be referred to as transform units (TUs). Pixel difference values associated with the TUs may be transformed to produce transform coefficients, which may be quantized.

[0026] In general, a PU includes data related to the prediction process. For example, when the PU is intra-mode encoded, the PU may include data describing an intra-prediction mode for the PU. As another example, when the PU is inter-mode encoded, the PU may include data defining a motion vector for the PU. The data defining the motion vector for a PU may describe, for example, a horizontal component of the motion vector, a vertical component of the motion vector, a resolution for the motion vector (e.g., one-quarter pixel precision or one-eighth pixel precision), a reference picture to which the motion vector points, and/or a reference picture list (e.g., List 0, List 1, or List C) for the motion vector.

[0027] In general, a TU is used for the transform and quantization processes. A given CU having one or more PUs may also include one or more transform units (TUs). Following prediction, video encoder 20 may calculate residual values corresponding to the PU. The residual values comprise pixel difference values that may be transformed into transform coefficients, quantized, and scanned using the TUs to produce serialized transform coefficients for entropy coding. This disclosure typically uses the term "video block" to refer to a coding node of a CU. In some specific cases, this disclosure may also use the term "video block" to refer to a treeblock, i.e., LCU, or a CU, which includes a coding node and PUs and TUs.

[0028] A video sequence typically includes a series of video frames or pictures. A group of pictures (GOP) generally comprises a series of one or more of the video pictures. A GOP may include syntax data in a header of the GOP, a header of one or more of the pictures, or elsewhere, that describes a number of pictures included in the GOP. Each slice of a picture may include slice syntax data that describes an encoding mode for the respective slice. Video encoder 20 typically operates on video blocks within individual video slices in order to encode the video data. A video block may correspond to a coding node within a CU. The video blocks may have fixed or varying sizes, and may differ in size according to a specified coding standard.

[0029] As an example, the HM supports prediction in various PU sizes. Assuming that the size of a particular CU is 2Nx2N, the HM supports intra-prediction in PU sizes of 2Nx2N or NxN, and inter-prediction in symmetric PU sizes of 2Nx2N, 2NxN, Nx2N, or NxN. The HM also supports asymmetric partitioning for inter-prediction in PU sizes of 2NxnU, 2NxnD, nLx2N, and nRx2N. In asymmetric partitioning, one direction of a CU

Amazon.com, Inc., Amazon.com Services LLC - Ex. 1057, Page 000008

is not partitioned, while the other direction is partitioned into 25% and 75%. The portion of the CU corresponding to the 25% partition is indicated by an "n" followed by an indication of "Up", "Down," "Left," or "Right." Thus, for example, "2NxnU" refers to a 2Nx2N CU that is partitioned horizontally with a 2Nx0.5N PU on top and a 2Nx1.5N PU on bottom.

[0030] In this disclosure, "NxN" and "N by N" may be used interchangeably to refer to the pixel dimensions of a video block in terms of vertical and horizontal dimensions, e.g., 16x16 pixels or 16 by 16 pixels. In general, a 16x16 block will have 16 pixels in a vertical direction (y = 16) and 16 pixels in a horizontal direction (x = 16). Likewise, an NxN block generally has N pixels in a vertical direction and N pixels in a horizontal direction, where N represents a nonnegative integer value. The pixels in a block may be arranged in rows and columns. Moreover, blocks need not necessarily have the same number of pixels in the horizontal direction as in the vertical direction. For example, blocks may comprise NxM pixels, where M is not necessarily equal to N.

[0031] Following intra-predictive or inter-predictive coding using the PUs of a CU, video encoder 20 may calculate residual data for the TUs of the CU. The PUs may comprise pixel data in the spatial domain (also referred to as the pixel domain) and the TUs may comprise coefficients in the transform domain following application of a transform, e.g., a discrete cosine transform (DCT), an integer transform, a wavelet transform, or a conceptually similar transform to residual video data. The residual data may correspond to pixel differences between pixels of the unencoded picture and prediction values corresponding to the PUs. Video encoder 20 may form the TUs including the residual data for the CU, and then transform the TUs to produce transform coefficients for the CU.

[0032] Following any transforms to produce transform coefficients, video encoder 20 may perform quantization of the transform coefficients. Quantization generally refers to a process in which transform coefficients are quantized to possibly reduce the amount of data used to represent the coefficients, providing further compression. The quantization process may reduce the bit depth associated with some or all of the coefficients. For example, an n-bit value may be rounded down to an m-bit value during quantization, where n is greater than m.

[0033] In some examples, video encoder 20 may utilize a predefined scan order to scan the quantized transform coefficients to produce a serialized vector that can be entropy encoded. In other examples, video encoder 20 may perform an adaptive scan. After

Amazon.com, Inc., Amazon.com Services LLC - Ex. 1057, Page 000009

scanning the quantized transform coefficients to form a one-dimensional vector, video encoder 20 may entropy encode the one-dimensional vector, e.g., according to context adaptive variable length coding (CAVLC), context adaptive binary arithmetic coding (CABAC), syntax-based context-adaptive binary arithmetic coding (SBAC), Probability Interval Partitioning Entropy (PIPE) coding or another entropy encoding methodology. Video encoder 20 may also entropy encode syntax elements associated with the encoded video data for use by video decoder 30 in decoding the video data.

[0034] To perform CABAC, video encoder 20 may assign a context within a context model to a symbol to be transmitted. The context may relate to, for example, whether neighboring values of the symbol are non-zero or not. To perform CAVLC, video encoder 20 may select a variable length code for a symbol to be transmitted. Codewords in VLC may be constructed such that relatively shorter codes correspond to more probable symbols, while longer codes correspond to less probable symbols. In this way, the use of VLC may achieve a bit savings over, for example, using equal-length codewords for each symbol to be transmitted. The probability determination may be based on a context assigned to the symbol.

[0035] FIG. 2 is a block diagram illustrating an example video encoder 20 that may implement the techniques described in this disclosure. Video encoder 20 may perform intra- and inter-coding of video blocks within video slices. Intra-coding relies on spatial prediction to reduce or remove spatial redundancy in video within a given video frame or picture. Inter-coding relies on temporal prediction to reduce or remove temporal redundancy in video within adjacent frames or pictures of a video sequence. Intra-mode (I mode) may refer to any of several spatial based compression modes. Inter-modes, such as uni-directional prediction (P mode) or bi-prediction (B mode), may refer to any of several temporal-based compression modes.

[0036] In the example of FIG. 2, video encoder 20 includes a partitioning unit 35, prediction module 41, reference picture memory 64, summer 50, transform module 52, quantization unit 54, and entropy encoding unit 56. Prediction module 41 includes motion estimation unit 42, motion compensation unit 44, and intra prediction unit 46. For video block reconstruction, video encoder 20 also includes inverse quantization unit 58, inverse transform unit 60, and summer 62. A deblocking filter (not shown in FIG. 2) may also be included to filter block boundaries to remove blockiness artifacts from reconstructed video. If desired, the deblocking filter would typically filter the output of

Amazon.com, Inc., Amazon.com Services LLC - Ex. 1057, Page 000010

summer 62. Additional loop filters (in loop or post loop) may also be used in addition to the deblocking filter.

[0037] As shown in FIG. 2, video encoder 20 receives video data, and partitioning unit 35 partitions the data into video blocks. This partitioning may also include partitioning into slices, tiles, or other larger units, as wells as video block partitioning, e.g., according to a quadtree structure of LCUs and CUs. Video encoder 20 generally illustrates the components that encode video blocks within a video slice to be encoded. The slice may be divided into multiple video blocks (and possibly into sets of video blocks referred to as tiles). Prediction module 41 may select one of a plurality of possible coding modes, such as one of a plurality of intra coding modes or one of a plurality of inter coding modes, for the current video block based on error results (e.g., coding rate and the level of distortion). Prediction module 41 may provide the resulting intra- or inter-coded block to summer 50 to generate residual block data and to summer 62 to reconstruct the encoded block for use as a reference picture.

[0038] Intra prediction unit 46 within prediction module 41 may perform intra-predictive coding of the current video block relative to one or more neighboring blocks in the same frame or slice as the current block to be coded to provide spatial compression. Motion estimation unit 42 and motion compensation unit 44 within prediction module 41 perform inter-predictive coding of the current video block relative to one or more predictive blocks in one or more reference pictures to provide temporal compression.

[0039] Motion estimation unit 42 may be configured to determine the inter-prediction mode for a video slice according to a predetermined pattern for a video sequence. The predetermined pattern may designate video slices in the sequence as P slices, B slices or GPB slices. Motion estimation unit 42 and motion compensation unit 44 may be highly integrated, but are illustrated separately for conceptual purposes. Motion estimation, performed by motion estimation unit 42, is the process of generating motion vectors, which estimate motion for video blocks. A motion vector, for example, may indicate the displacement of a PU of a video block within a current video frame or picture relative to a predictive block within a reference picture.

[0040] A predictive block is a block that is found to closely match the PU of the video block to be coded in terms of pixel difference, which may be determined by sum of absolute difference (SAD), sum of square difference (SSD), or other difference metrics. In some examples, video encoder 20 may calculate values for sub-integer pixel positions

Amazon.com, Inc., Amazon.com Services LLC - Ex. 1057, Page 000011

of reference pictures stored in reference picture memory 64. For example, video encoder 20 may interpolate values of one-quarter pixel positions, one-eighth pixel positions, or other fractional pixel positions of the reference picture. Therefore, motion estimation unit 42 may perform a motion search relative to the full pixel positions and fractional pixel positions and output a motion vector with fractional pixel precision.

[0041] Motion estimation unit 42 calculates a motion vector for a PU of a video block in an inter-coded slice by comparing the position of the PU to the position of a predictive block of a reference picture. The reference picture may be selected from a first reference picture list (List 0) or a second reference picture list (List 1), each of which identify one or more reference pictures stored in reference picture memory 64. Motion estimation unit 42 sends the calculated motion vector to entropy encoding unit 56 and motion compensation unit 44.

[0042] Motion compensation, performed by motion compensation unit 44, may involve fetching or generating the predictive block based on the motion vector determined by motion estimation, possibly performing interpolations to sub-pixel precision. Upon receiving the motion vector for the PU of the current video block, motion compensation unit 44 may locate the predictive block to which the motion vector points in one of the reference picture lists. Video encoder 20 forms a residual video block by subtracting pixel values of the predictive block from the pixel values of the current video block being coded, forming pixel difference values. The pixel difference values form residual data for the block, and may include both luma and chroma difference components. Summer 50 represents the component or components that perform this subtraction operation. Motion compensation unit 44 may also generate syntax elements associated with the video blocks and the video slice for use by video decoder 30 in decoding the video blocks of the video slice.

[0043] Intra-prediction unit 46 may intra-predict a current block, as an alternative to the inter-prediction performed by motion estimation unit 42 and motion compensation unit 44, as described above. In particular, intra-prediction unit 46 may determine an intra-prediction mode to use to encode a current block. In some examples, intra-prediction unit 46 may encode a current block using various intra-prediction modes, e.g., during separate encoding passes, and intra-prediction unit 46 (or mode select unit 40, in some examples) may select an appropriate intra-prediction mode to use from the tested modes. For example, intra-prediction unit 46 may calculate rate-distortion values using a rate-distortion analysis for the various tested intra-prediction modes, and select

Amazon.com, Inc., Amazon.com Services LLC - Ex. 1057, Page 000012

the intra-prediction mode having the best rate-distortion characteristics among the tested modes. Rate-distortion analysis generally determines an amount of distortion (or error) between an encoded block and an original, unencoded block that was encoded to produce the encoded block, as well as a bit rate (that is, a number of bits) used to produce the encoded block. Intra-prediction unit 46 may calculate ratios from the distortions and rates for the various encoded blocks to determine which intra-prediction mode exhibits the best rate-distortion value for the block. Examples of intra prediction modes and corresponding mode indexes that may be used with HEVC are shown in Appendix 2.

[0044] In any case, after selecting an intra-prediction mode for a block, intra-prediction unit 46 may provide information indicative of the selected intra-prediction mode for the block to entropy coding unit 56. Entropy coding unit 56 may encode the information indicating the selected intra-prediction mode in accordance with the techniques of this disclosure. Video encoder 20 may include in the transmitted bitstream configuration data, which may include a plurality of intra-prediction mode index tables and a plurality of modified intra-prediction mode index tables (also referred to as codeword mapping tables), definitions of encoding contexts for various blocks, and indications of a most probable intra-prediction mode, an intra-prediction mode index table, and a modified intra-prediction mode index table to use for each of the contexts.

[0045] After prediction module 41 generates the predictive block for the current video block via either inter-prediction or intra-prediction, video encoder 20 forms a residual video block by subtracting the predictive block from the current video block. The residual video data in the residual block may be included in one or more TUs and applied to transform module 52. Transform module 52 transforms the residual video data into residual transform coefficients using a transform, such as a discrete cosine transform (DCT) or a conceptually similar transform. Transform module 52 may convert the residual video data from a pixel domain to a transform domain, such as a frequency domain.

[0046] Transform module 52 may send the resulting transform coefficients to quantization unit 54. Quantization unit 54 quantizes the transform coefficients to further reduce bit rate. The quantization process may reduce the bit depth associated with some or all of the coefficients. The degree of quantization may be modified by adjusting a quantization parameter. In some examples, quantization unit 54 may then

Amazon.com, Inc., Amazon.com Services LLC - Ex. 1057, Page 000013

perform a scan of the matrix including the quantized transform coefficients. Alternatively, entropy encoding unit 56 may perform the scan.

[0047] Following quantization, entropy encoding unit 56 entropy encodes the quantized transform coefficients. For example, entropy encoding unit 56 may perform context adaptive variable length coding (CAVLC), context adaptive binary arithmetic coding (CABAC), syntax-based context-adaptive binary arithmetic coding (SBAC), probability interval partitioning entropy (PIPE) coding or another entropy encoding methodology or technique. Following the entropy encoding by entropy encoding unit 56, the encoded bitstream may be transmitted to video decoder 30, or archived for later transmission or retrieval by video decoder 30. Entropy encoding unit 56 may also entropy encode the motion vectors and the other syntax elements for the current video slice being coded.

[0048] Inverse quantization unit 58 and inverse transform unit 60 apply inverse quantization and inverse transformation, respectively, to reconstruct the residual block in the pixel domain for later use as a reference block of a reference picture. Motion compensation unit 44 may calculate a reference block by adding the residual block to a predictive block of one of the reference pictures within one of the reference picture lists. Motion compensation unit 44 may also apply one or more interpolation filters to the reconstructed residual block to calculate sub-integer pixel values for use in motion estimation. Summer 62 adds the reconstructed residual block to the motion compensated prediction block produced by motion compensation unit 44 to produce a reference block for storage in reference picture memory 64. The reference block may be used by motion estimation unit 42 and motion compensation unit 44 as a reference block to inter-predict a block in a subsequent video frame or picture.

[0049] FIG. 3 is a block diagram illustrating an example video decoder 30 that may implement the techniques described in this disclosure. In the example of FIG. 3, video decoder 30 includes an entropy decoding unit 80, prediction module 81, inverse quantization unit 86, inverse transformation unit 88, summer 90, and reference picture memory 92. Prediction module 81 includes motion compensation unit 82 and intra prediction unit 84. Video decoder 30 may, in some examples, perform a decoding pass generally reciprocal to the encoding pass described with respect to video encoder 20 from FIG. 2.

[0050] During the decoding process, video decoder 30 receives an encoded video bitstream that represents video blocks of an encoded video slice and associated syntax elements from video encoder 20. Entropy decoding unit 80 of video decoder 30 entropy

Amazon.com, Inc., Amazon.com Services LLC - Ex. 1057, Page 000014

decodes the bitstream to generate quantized coefficients, motion vectors, and other syntax elements. Entropy decoding unit 80 forwards the motion vectors and other syntax elements to prediction module 81. Video decoder 30 may receive the syntax elements at the video slice level and/or the video block level.

[0051] When the video slice is coded as an intra-coded (I) slice, intra prediction unit 84 of prediction module 81 may generate prediction data for a video block of the current video slice based on a signaled intra prediction mode and data from previously decoded blocks of the current frame or picture. When the video frame is coded as an inter-coded (i.e., B, P or GPB) slice, motion compensation unit 82 of prediction module 81 produces predictive blocks for a video block of the current video slice based on the motion vectors and other syntax elements received from entropy decoding unit 80. The predictive blocks may be produced from one of the reference pictures within one of the reference picture lists. Video decoder 30 may construct the reference frame lists, List 0 and List 1, using default construction techniques based on reference pictures stored in reference picture memory 92.

[0052] Motion compensation unit 82 determines prediction information for a video block of the current video slice by parsing the motion vectors and other syntax elements, and uses the prediction information to produce the predictive blocks for the current video block being decoded. For example, motion compensation unit 82 uses some of the received syntax elements to determine a prediction mode (e.g., intra- or inter-prediction) used to code the video blocks of the video slice, an inter-prediction slice type (e.g., B slice, P slice, or GPB slice), construction information for one or more of the reference picture lists for the slice, motion vectors for each inter-encoded video block of the slice, inter-prediction status for each inter-coded video block of the slice, and other information to decode the video blocks in the current video slice.

[0053] Motion compensation unit 82 may also perform interpolation based on interpolation filters. Motion compensation unit 82 may use interpolation filters as used by video encoder 20 during encoding of the video blocks to calculate interpolated values for sub-integer pixels of reference blocks. In this case, motion compensation unit 82 may determine the interpolation filters used by video encoder 20 from the received syntax elements and use the interpolation filters to produce predictive blocks.

[0054] Inverse quantization unit 86 inverse quantizes, i.e., de-quantizes, the quantized transform coefficients provided in the bitstream and decoded by entropy decoding unit 80. The inverse quantization process may include use of a quantization parameter

Amazon.com, Inc., Amazon.com Services LLC - Ex. 1057, Page 000015

calculated by video encoder 20 for each video block in the video slice to determine a degree of quantization and, likewise, a degree of inverse quantization that should be applied. Inverse transform unit 88 applies an inverse transform, e.g., an inverse DCT, an inverse integer transform, or a conceptually similar inverse transform process, to the transform coefficients in order to produce residual blocks in the pixel domain.

[0055] After prediction module 81generates the predictive block for the current video block based on either intra-prediction or inter-prediction, video decoder 30 forms a decoded video block by summing the residual blocks from inverse transform unit 88 with the corresponding predictive blocks generated by prediction module 81. Summer 90 represents the component or components that perform this summation operation. If desired, a deblocking filter may also be applied to filter the decoded blocks in order to remove blockiness artifacts. Other loop filters (either in the coding loop or after the coding loop) may also be used to smooth pixel transitions, or otherwise improve the video quality. The decoded video blocks in a given frame or picture are then stored in reference picture memory 92, which stores reference pictures used for subsequent motion compensation. Reference picture memory 92 also stores decoded video for later presentation on a display device, such as display device 32 of FIG. 1.

[0056] In most hybrid video coding systems, motion estimation and motion compensation can be used to reduce temporal redundancy in a video in order to obtain good coding performance. Motion estimation is sometimes performed at a video encoder. Motion information estimated by the video encoder, which includes motion vector (mv), reference frame index (refIdx), and prediction direction (inter_dir: forward or backward), can be transmitted to a video decoder as part of an encoded video bitstream. As there can still be some redundancies in the motion field, predictive coding of motion vectors can also be applied in most of the video coding standards. In H.264/AVC, for example, a motion vector predictor (mvp) can be derived by determining a median of at most three neighboring video blocks with the same reference frame index. Motion vector difference (mvd = mv – mvp) can be transmitted to a video decoder instead of the motion vector.

[0057] MERGE (MRG) mode has been proposed to further reduce the information that needs to be sent from a video encoder, such as video encoder 20, to a video decoder, such as video decoder 30. In MRG mode, a candidate set can be built by including the spatial and temporal neighboring blocks. Instead of only take the motion vectors of the candidate blocks as motion vector predictors, MRG mode inherits motion

Amazon.com, Inc., Amazon.com Services LLC - Ex. 1057, Page 000016

vector (mv), reference frame index(refIdx), and prediction direction (pred_dir: uni-pred/bi-pred). The video encoder can select motion information (mv, refIdx, and pred_dir) all together from one neighboring block in the candidate set for coding the current block. The candidate index can be transmitted from the video encoder to the video decoder as part of an encoded bitstream. Instead of transmitting motion vector difference(mvd), reference frame index (refIdx), and prediction direction (pred_dir: uni-pred/bi-pred), MRG mode can directly use the selected motion information as the final motion information of current block. In order for a video decoder to parse the candidate index transmitted by a video encoder, the video decoder can implement the same techniques for generating candidate lists as used by the video encoder. Accordingly, in some instances, the techniques described in this disclosure can be implemented at both a video encoder and a video decoder.

[0058] FIG. 4 shows an example of neighboring blocks that can be included in a candidate set of MRG mode (L = left block; A = above block; BL = bottom left; RA = right above; LA = left above; T = temporal block from other frame). FIG. 4 shows spatial and temporal neighboring blocks for generating motion vector candidate sets in MERGE mode.

[0059] For 2NxN, Nx2N, NxN, and AMP partition modes as shown in FIG. 5, in the merge mode of the non-first PU, the motion information of the each candidate can be compared with the previous PU(s) in one CU to avoid the whole block using the same motion information and duplicating the 2Nx2N partition mode. For the 2NxN, Nx2N, 2NxnD, 2NxnU, nLx2N, nRx2N cases, if the merge candidate of second PU has the same motion information as that of the first PU, this candidate can be set as not available. For the NxN case where PU_0 and PU1 have same motion information, if merge candidate of PU_3 has same motion information as PU_2, the candidate can be set to unavailable. For the NxN case where PU_0 and PU2 have same motion information, if merge candidate of PU_3 has same motion information as PU_1, the candidate can be set to unavailable.

[0060] The comparison of neighboring motion information can disallow the parallel design of the merge candidate list generation, as the later PU may depend on the motion information of the pervious PUs. Additionally, the motion comparison can also be computational expensive.

[0061] FIG. 5 shows examples of prediction partition shapes and indexes. According to techniques of this disclosure, some or all of the comparison and dependencies of Pus

Amazon.com, Inc., Amazon.com Services LLC - Ex. 1057, Page 000017

can be removed, which may allow parallel friendly design and also reduce computational costs.

[0062] FIG. 6 shows examples of merge candidate checking positions for PUs. For purposes of explanation, the 2NxN and Nx2N will be used as examples to elaborate the techniques described below. However, the techniques described can also be applied to partition modes other than the 2Nx2N partition mode.

[0063] According to the techniques of this disclosure, the merge candidate comparison can be removed. This technique proposes to remove the above comparison (avoiding check in HM4.0 software). As shown in FIG. 6, the motion information of merge candidates may in some instances not be compared with that of the previous PUs, even the 2Nx2N partition mode is formed.

[0064] Additionally, according to the techniques of this disclosure, trivial merge candidates can be removed. Some of the merge candidates as shown in the example of FIG. 6 are located inside a previous PU, which in some instances, means they will always have the same motion information as the previous PU. These candidates can be identified as trivial candidates. For example, candidate L in Nx2N PU_1 and candidate A in 2NxN PU_1 can be examples of trivial candidates. According to the techniques of this disclosure, the trivial candidates can be removed during the process of generating merge candidates to reduce the probability that the whole partition will be formed into a 2Nx2N block which is covered by 2Nx2N mode.

[0065] In one or more examples, the functions described may be implemented in hardware, software, firmware, or any combination thereof. If implemented in software, the functions may be stored on or transmitted over, as one or more instructions or code, a computer-readable medium and executed by a hardware-based processing unit. Computer-readable media may include computer-readable storage media, which corresponds to a tangible medium such as data storage media, or communication media including any medium that facilitates transfer of a computer program from one place to another, e.g., according to a communication protocol. In this manner, computer-readable media generally may correspond to (1) tangible computer-readable storage media which is non-transitory or (2) a communication medium such as a signal or carrier wave. Data storage media may be any available media that can be accessed by one or more computers or one or more processors to retrieve instructions, code and/or data structures for implementation of the techniques described in this disclosure. A computer program product may include a computer-readable medium.

Amazon.com, Inc., Amazon.com Services LLC - Ex. 1057, Page 000018

[0066] By way of example, and not limitation, such computer-readable storage media can comprise RAM, ROM, EEPROM, CD-ROM or other optical disk storage, magnetic disk storage, or other magnetic storage devices, flash memory, or any other medium that can be used to store desired program code in the form of instructions or data structures and that can be accessed by a computer. Also, any connection is properly termed a computer-readable medium. For example, if instructions are transmitted from a website, server, or other remote source using a coaxial cable, fiber optic cable, twisted pair, digital subscriber line (DSL), or wireless technologies such as infrared, radio, and microwave, then the coaxial cable, fiber optic cable, twisted pair, DSL, or wireless technologies such as infrared, radio, and microwave are included in the definition of medium. It should be understood, however, that computer-readable storage media and data storage media do not include connections, carrier waves, signals, or other transient media, but are instead directed to non-transient, tangible storage media. Disk and disc, as used herein, includes compact disc (CD), laser disc, optical disc, digital versatile disc (DVD), floppy disk and Blu-ray disc, where disks usually reproduce data magnetically, while discs reproduce data optically with lasers. Combinations of the above should also be included within the scope of computer-readable media.

[0067] Instructions may be executed by one or more processors, such as one or more digital signal processors (DSPs), general purpose microprocessors, application specific integrated circuits (ASICs), field programmable logic arrays (FPGAs), or other equivalent integrated or discrete logic circuitry. Accordingly, the term "processor," as used herein may refer to any of the foregoing structure or any other structure suitable for implementation of the techniques described herein. In addition, in some aspects, the functionality described herein may be provided within dedicated hardware and/or software modules configured for encoding and decoding, or incorporated in a combined codec. Also, the techniques could be fully implemented in one or more circuits or logic elements.

[0068] The techniques of this disclosure may be implemented in a wide variety of devices or apparatuses, including a wireless handset, an integrated circuit (IC) or a set of ICs (e.g., a chip set). Various components, modules, or units are described in this disclosure to emphasize functional aspects of devices configured to perform the disclosed techniques, but do not necessarily require realization by different hardware units. Rather, as described above, various units may be combined in a codec hardware

Amazon.com, Inc., Amazon.com Services LLC - Ex. 1057, Page 000019

unit or provided by a collection of interoperative hardware units, including one or more processors as described above, in conjunction with suitable software and/or firmware.

[0069] Various examples have been described. These and other examples are within the scope of the following claims.

Amazon.com, Inc., Amazon.com Services LLC - Ex. 1057, Page 000020

WHAT IS CLAIMED IS:

1. A method for coding video data, the method comprising:
generating a merge candidate list, wherein generating the merge candidate list comprises removing trivial candidates from consideration as possible merge candidates.

2. The method of claim 1, wherein possible merge candidates located inside a previous PU are trivial candidates.

3. A method of coding video data, the method comprising:
generating a merge candidates list, wherein generating the merge candidates list comprises not comparing motion information of candidates to previous PUs.

4. A method comprising any combination of claims 1-3.

5. The method of any combination of claims 1-3, wherein the method is performed by a video decoder.

6. The method of any combination of claims 1-3, wherein the method is performed by a video encoder.

7. A computer program product comprising a computer-readable storage medium having stored thereon instructions that, when executed, cause one or more processors of a device for coding video data to perform the method of any combination of claims 1-3.

8. A video coding device comprising:
a video decoder configured to perform the method of any combination of claims 1-3.

9. A video coding device comprising:
a video encoder configured to perform the method of any combination of claims 1-3.

Amazon.com, Inc., Amazon.com Services LLC - Ex. 1057, Page 000021

10. An apparatus comprising:
a memory storing instructions;
one or more processors which upon execution of the instructions are configured to perform the method of any combination of claims 1-3.

11. The apparatus of claim 10 wherein the apparatus comprises a video decoder.

12. The apparatus of claim 10, wherein the apparatus comprises a video encoder.

13. An apparatus comprising:
means for generating a merge candidate list, wherein the means for generating the merge candidate list comprises means for removing trivial candidates from consideration as possible merge candidates.

14. The apparatus of claim 13, wherein possible merge candidates located inside a previous PU are trivial candidates.

15. An apparatus comprising:
means for generating a merge candidates list, wherein the means for generating the merge candidates list does not compare motion information of candidates to previous PUs.

16. An apparatus comprising any combination of means of claims 13-15.

Amazon.com, Inc., Amazon.com Services LLC - Ex. 1057, Page 000022

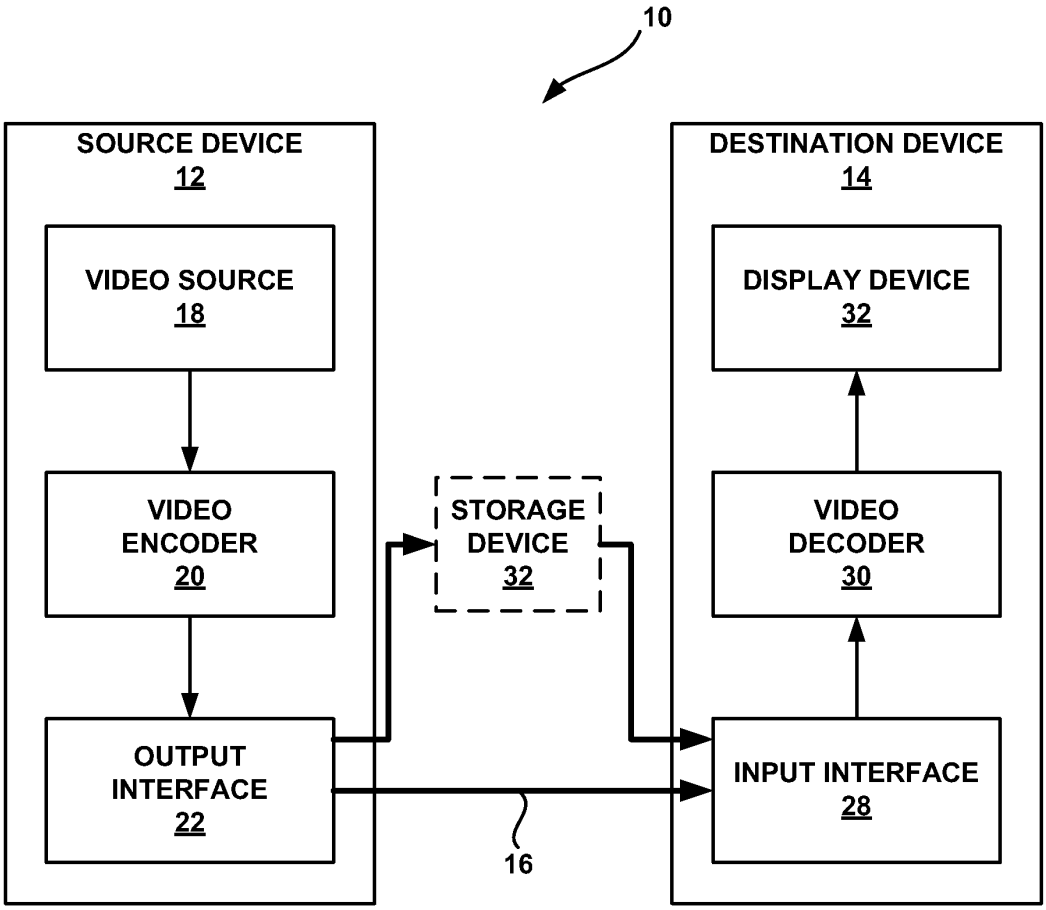
10
SOURCE DEVICE
12
VIDEO SOURCE
18
VIDEO
ENCODER
20
OUTPUT
INTERFACE
22
STORAGE
DEVICE
32
16
DESTINATION DEVICE
14
DISPLAY DEVICE
32
VIDEO
DECODER
30
INPUT INTERFACE
28

FIG. 1

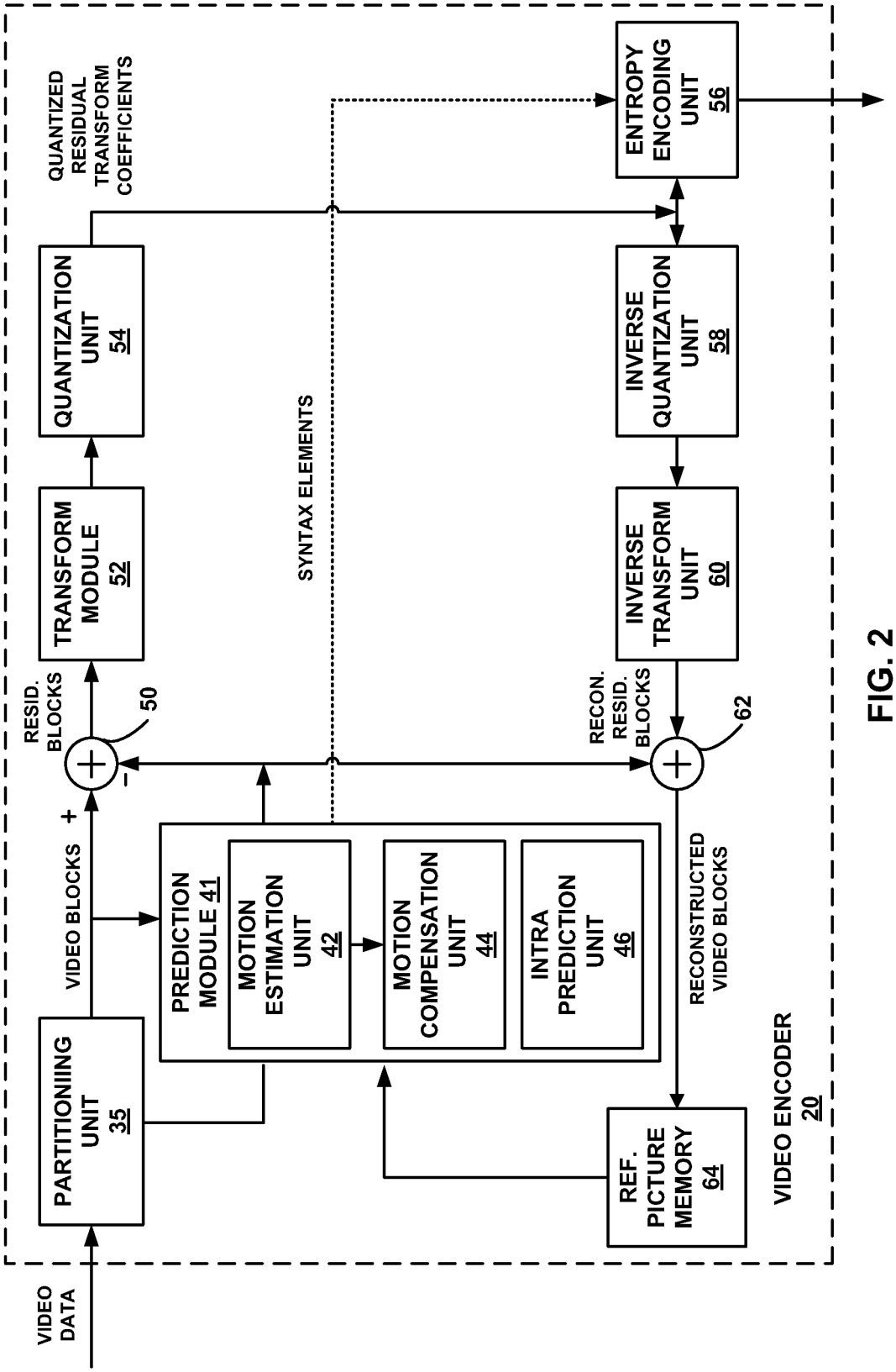
VIDEO DATA
PARTITIONIING UNIT 35
VIDEO BLOCKS
+
RESID. BLOCKS
50
-
TRANSFORM MODULE 52
QUANTIZATION UNIT 54
QUANTIZED RESIDUAL TRANSFORM COEFFICIENTS
PREDICTION MODULE 41
MOTION ESTIMATION UNIT 42
MOTION COMPENSATION UNIT 44
INTRA PREDICTION UNIT 46
SYNTAX ELEMENTS
ENTROPY ENCODING UNIT 56
INVERSE QUANTIZATION UNIT 58
INVERSE TRANSFORM UNIT 60
RECON. RESID. BLOCKS
62
RECONSTRUCTED VIDEO BLOCKS
REF. PICTURE MEMORY 64
VIDEO ENCODER 20

FIG. 2

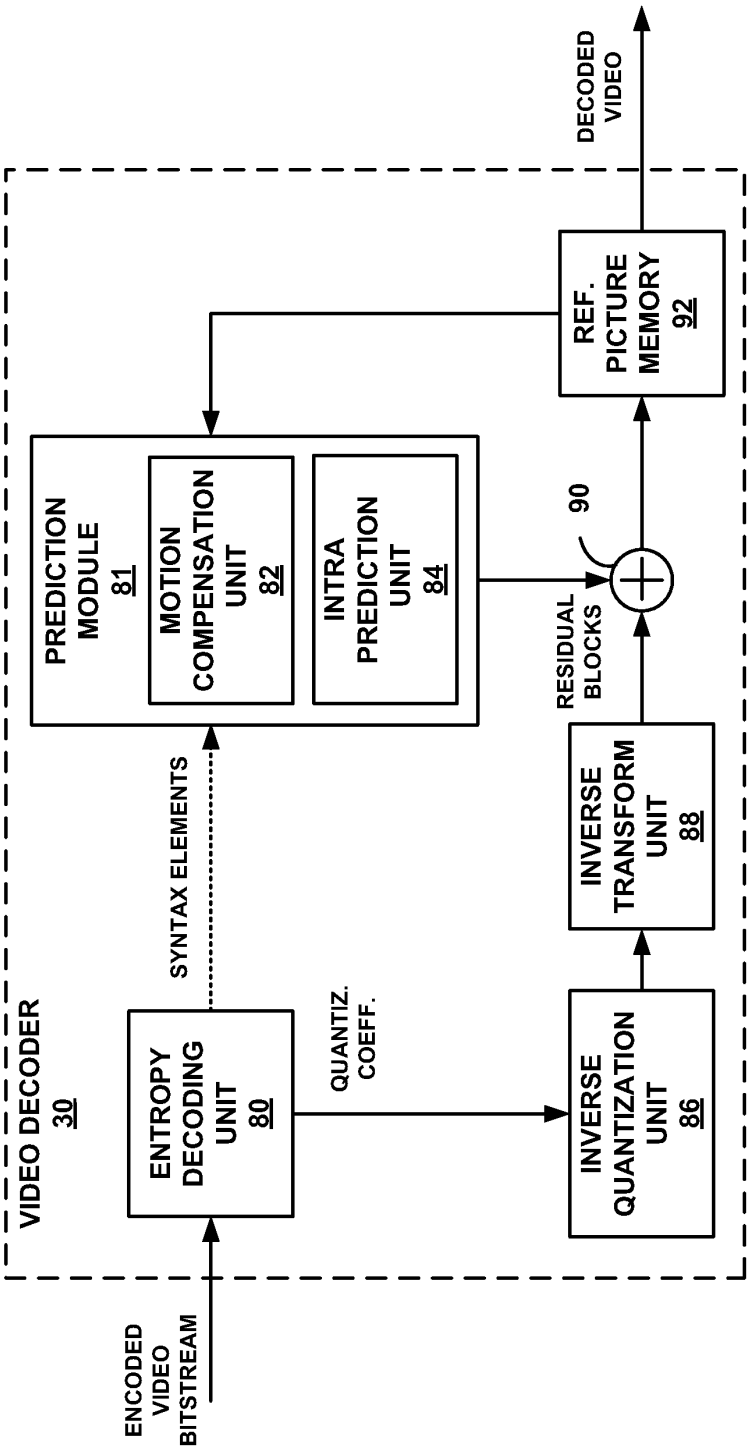
VIDEO DECODER
30
ENCODED VIDEO BITSTREAM
ENTROPY DECODING UNIT
80
SYNTAX ELEMENTS
PREDICTION MODULE
81
MOTION COMPENSATION UNIT
82
INTRA PREDICTION UNIT
84
QUANTIZ. COEFF.
INVERSE QUANTIZATION UNIT
86
INVERSE TRANSFORM UNIT
88
RESIDUAL BLOCKS
90
REF. PICTURE MEMORY
92
DECODED VIDEO

FIG. 3

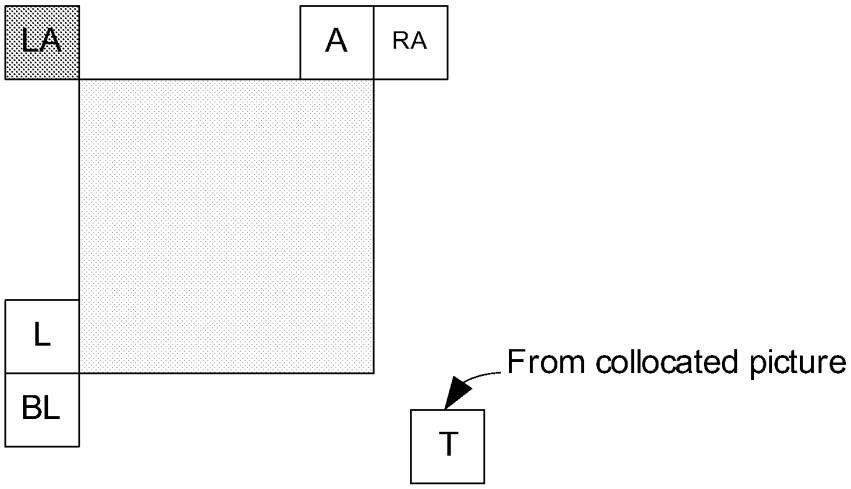

FIG. 4

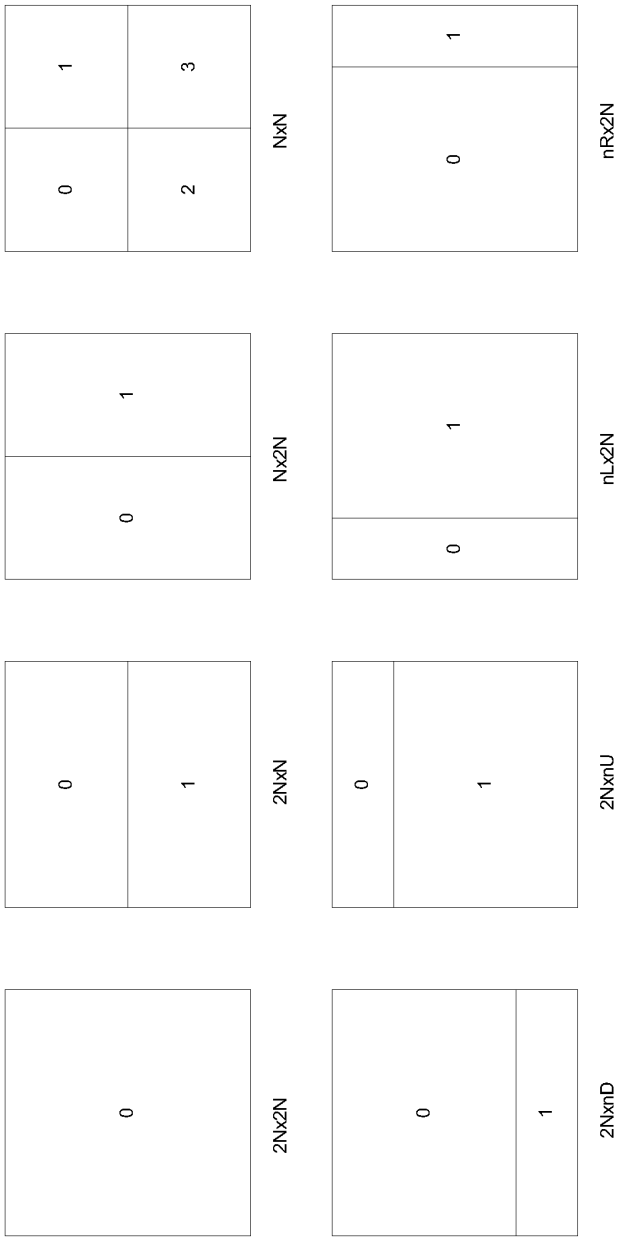
0
2Nx2N
0
1
2NxN
0
1
Nx2N
0
1
2
3
NxN
0
1
2NxnD
0
1
2NxnU
0
1
nLx2N
0
1
nRx2N

FIG. 5

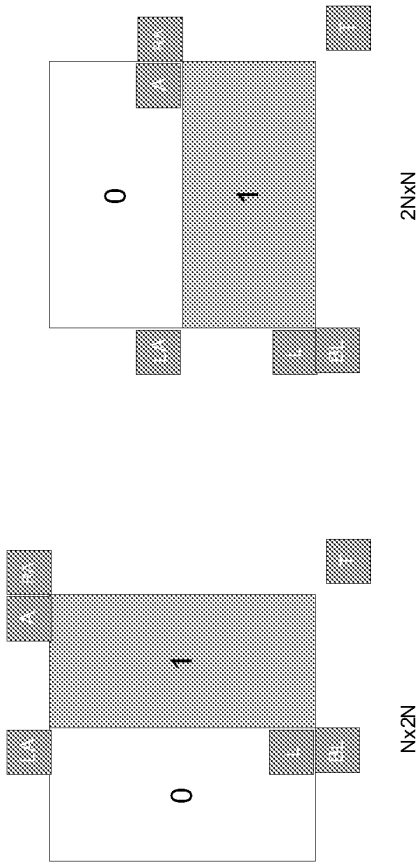

FIG. 6

PTO/SB/14 (07-07)
Approved for use through 06/30/2010. OMB 0651-0032
U.S. Patent and Trademark Office; U.S. DEPARTMENT OF COMMERCE
Under the Paperwork Reduction Act of 1995, no persons are required to respond to a collection of information unless it contains a valid OMB control number.

Application Data Sheet 37 CFR 1.76	Attorney Docket Number	1212-009USP1/120469
	Application Number	
Title of Invention	REMOVAL OF TRIVIAL MERGE CANDIDATES AND MERGE CANDIDATE COMPARISON	

The application data sheet is part of the provisional or nonprovisional application for which it is being submitted. The following form contains the bibliographic data arranged in a format specified by the United States Patent and Trademark Office as outlined in 37 CFR 1.76.
This document may be completed electronically and submitted to the Office in electronic format using the Electronic Filing System (EFS) or the document may be printed and included in a paper filed application.

Secrecy Order 37 CFR 5.2

☐ Portions or all of the application associated with this Application Data Sheet may fall under a Secrecy Order pursuant to 37 CFR 5.2 (Paper filers only. Applications that fall under Secrecy Order may not be filed electronically.)

Applicant Information:

Applicant 1 Remove

Applicant Authority ◉ Inventor ◯ Legal Representative under 35 U.S.C. 117 ◯ Party of Interest under 35 U.S.C. 118

Prefix	Given Name	Middle Name	Family Name	Suffix
	Yunfei		Zheng	

Residence Information (Select One) ◉ US Residency ◯ Non US Residency ◯ Active US Military Service

City	SAN DIEGO	State/Province	CA	Country of Residence i	US

Citizenship under 37 CFR 1.41(b) i CN

Mailing Address of Applicant:

Address 1	5775 MOREHOUSE DRIVE		
Address 2			
City	SAN DIEGO	State/Province	CA
Postal Code	92121	Country i	US

Applicant 2 Remove

Applicant Authority ◉ Inventor ◯ Legal Representative under 35 U.S.C. 117 ◯ Party of Interest under 35 U.S.C. 118

Prefix	Given Name	Middle Name	Family Name	Suffix
	Xianglin		Wang	

Residence Information (Select One) ◉ US Residency ◯ Non US Residency ◯ Active US Military Service

City	SAN DIEGO	State/Province	CA	Country of Residence i	US

Citizenship under 37 CFR 1.41(b) i US

Mailing Address of Applicant:

Address 1	5775 MOREHOUSE DRIVE		
Address 2			
City	SAN DIEGO	State/Province	CA
Postal Code	92121	Country i	US

Applicant 3 Remove

Applicant Authority ◉ Inventor ◯ Legal Representative under 35 U.S.C. 117 ◯ Party of Interest under 35 U.S.C. 118

Prefix	Given Name	Middle Name	Family Name	Suffix
	Marta		Karczewicz	

Residence Information (Select One) ◉ US Residency ◯ Non US Residency ◯ Active US Military Service

City	SAN DIEGO	State/Province	CA	Country of Residence i	US

PTO/SB/14 (07-07)
Approved for use through 06/30/2010. OMB 0651-0032
U.S. Patent and Trademark Office; U.S. DEPARTMENT OF COMMERCE
Under the Paperwork Reduction Act of 1995, no persons are required to respond to a collection of information unless it contains a valid OMB control number.

Application Data Sheet 37 CFR 1.76	Attorney Docket Number	1212-009USP1/120469
	Application Number	
Title of Invention	REMOVAL OF TRIVIAL MERGE CANDIDATES AND MERGE CANDIDATE COMPARISON	

Citizenship under 37 CFR 1.41(b) [i]	US		
Mailing Address of Applicant:			
Address 1	5775 MOREHOUSE DRIVE		
Address 2			
City	SAN DIEGO	**State/Province**	CA
Postal Code	92121	**Country**[i]	US

All Inventors Must Be Listed - Additional Inventor Information blocks may be generated within this form by selecting the **Add** button. Add

Correspondence Information:

Enter either Customer Number or complete the Correspondence Information section below. For further information see 37 CFR 1.33(a).

☐ **An Address is being provided for the correspondence Information of this application.**

Customer Number	15150		
Email Address		Add Email	Remove Email

Application Information:

Title of the Invention	REMOVAL OF TRIVIAL MERGE CANDIDATES AND MERGE CANDIDATE COMPARISON		
Attorney Docket Number	1212-009USP1/120469	**Small Entity Status Claimed**	☐
Application Type	Provisional		
Subject Matter	Utility		
Suggested Class (if any)		**Sub Class (if any)**	
Suggested Technology Center (if any)			
Total Number of Drawing Sheets (if any)	6	**Suggested Figure for Publication (if any)**	

Publication Information:

☐ Request Early Publication (Fee required at time of Request 37 CFR 1.219)

☐ **Request Not to Publish.** I hereby request that the attached application not be published under 35 U.S.C. 122(b) and certify that the invention disclosed in the attached application **has not and will not** be the subject of an application filed in another country, or under a multilateral international agreement, that requires publication at eighteen months after filing.

Representative Information:

Representative information should be provided for all practitioners having a power of attorney in the application. Providing this information in the Application Data Sheet does not constitute a power of attorney in the application (see 37 CFR 1.32). Enter either Customer Number or complete the Representative Name section below. If both sections are completed the Customer Number will be used for the Representative Information during processing.

Please Select One:	◉ Customer Number	○ US Patent Practitioner	○ Limited Recognition (37 CFR 11.9)

Under the Paperwork Reduction Act of 1995, no persons are required to respond to a collection of information unless it contains a valid OMB control number.

Application Data Sheet 37 CFR 1.76	Attorney Docket Number	1212-009USP1/120469
	Application Number	
Title of Invention	REMOVAL OF TRIVIAL MERGE CANDIDATES AND MERGE CANDIDATE COMPARISON	

Customer Number	15150

Domestic Benefit/National Stage Information:

This section allows for the applicant to either claim benefit under 35 U.S.C. 119(e), 120, 121, or 365(c) or indicate National Stage entry from a PCT application. Providing this information in the application data sheet constitutes the specific reference required by 35 U.S.C. 119(e) or 120, and 37 CFR 1.78(a)(2) or CFR 1.78(a)(4), and need not otherwise be made part of the specification.

Prior Application Status			Remove
Application Number	Continuity Type	Prior Application Number	Filing Date (YYYY-MM-DD)

Additional Domestic Benefit/National Stage Data may be generated within this form by selecting the **Add** button. Add

Foreign Priority Information:

This section allows for the applicant to claim benefit of foreign priority and to identify any prior foreign application for which priority is not claimed. Providing this information in the application data sheet constitutes the claim for priority as required by 35 U.S.C. 119(b) and 37 CFR 1.55(a).

Remove

Application Number	Country [i]	Parent Filing Date (YYYY-MM-DD)	Priority Claimed
			○ Yes ◉ No

Additional Foreign Priority Data may be generated within this form by selecting the **Add** button. Add

Assignee Information:

Providing this information in the application data sheet does not substitute for compliance with any requirement of part 3 of Title 37 of the CFR to have an assignment recorded in the Office.

Assignee 1 Remove

If the Assignee is an Organization check here. ☒

Organization Name	QUALCOMM Incorporated		
Mailing Address Information:			
Address 1	5775 Morehouse Drive		
Address 2			
City	San Diego	**State/Province**	CA
Country [i]	US	Postal Code	92121
Phone Number		Fax Number	
Email Address			

Additional Assignee Data may be generated within this form by selecting the **Add** button. Add

Signature:

A signature of the applicant or representative is required in accordance with 37 CFR 1.33 and 10.18. Please see 37 CFR 1.4(d) for the form of the signature.

PTO/SB/14 (07-07)
Approved for use through 06/30/2010. OMB 0651-0032
U.S. Patent and Trademark Office; U.S. DEPARTMENT OF COMMERCE
Under the Paperwork Reduction Act of 1995, no persons are required to respond to a collection of information unless it contains a valid OMB control number.

Application Data Sheet 37 CFR 1.76	Attorney Docket Number	1212-009USP1/120469
	Application Number	
Title of Invention	REMOVAL OF TRIVIAL MERGE CANDIDATES AND MERGE CANDIDATE COMPARISON	

Signature	/Jeffrey R. Joseph/			Date (YYYY-MM-DD)	2011-11-07
First Name	Jeffrey R.	Last Name	Joseph	Registration Number	54204

This collection of information is required by 37 CFR 1.76. The information is required to obtain or retain a benefit by the public which is to file (and by the USPTO to process) an application. Confidentiality is governed by 35 U.S.C. 122 and 37 CFR 1.14. This collection is estimated to take 23 minutes to complete, including gathering, preparing, and submitting the completed application data sheet form to the USPTO. Time will vary depending upon the individual case. Any comments on the amount of time you require to complete this form and/or suggestions for reducing this burden, should be sent to the Chief Information Officer, U.S. Patent and Trademark Office, U.S. Department of Commerce, P.O. Box 1450, Alexandria, VA 22313-1450. DO NOT SEND FEES OR COMPLETED FORMS TO THIS ADDRESS. **SEND TO: Commissioner for Patents, P.O. Box 1450, Alexandria, VA 22313-1450.**

Privacy Act Statement

The Privacy Act of 1974 (P.L. 93-579) requires that you be given certain information in connection with your submission of the attached form related to a patent application or patent. Accordingly, pursuant to the requirements of the Act, please be advised that: (1) the general authority for the collection of this information is 35 U.S.C. 2(b)(2); (2) furnishing of the information solicited is voluntary; and (3) the principal purpose for which the information is used by the U.S. Patent and Trademark Office is to process and/or examine your submission related to a patent application or patent. If you do not furnish the requested information, the U.S. Patent and Trademark Office may not be able to process and/or examine your submission, which may result in termination of proceedings or abandonment of the application or expiration of the patent.

The information provided by you in this form will be subject to the following routine uses:

1. The information on this form will be treated confidentially to the extent allowed under the Freedom of Information Act (5 U.S.C. 552) and the Privacy Act (5 U.S.C. 552a). Records from this system of records may be disclosed to the Department of Justice to determine whether the Freedom of Information Act requires disclosure of these records.

2. A record from this system of records may be disclosed, as a routine use, in the course of presenting evidence to a court, magistrate, or administrative tribunal, including disclosures to opposing counsel in the course of settlement negotiations.

3. A record in this system of records may be disclosed, as a routine use, to a Member of Congress submitting a request involving an individual, to whom the record pertains, when the individual has requested assistance from the Member with respect to the subject matter of the record.

4. A record in this system of records may be disclosed, as a routine use, to a contractor of the Agency having need for the information in order to perform a contract. Recipients of information shall be required to comply with the requirements of the Privacy Act of 1974, as amended, pursuant to 5 U.S.C. 552a(m).

5. A record related to an International Application filed under the Patent Cooperation Treaty in this system of records may be disclosed, as a routine use, to the International Bureau of the World Intellectual Property Organization, pursuant to the Patent Cooperation Treaty.

6. A record in this system of records may be disclosed, as a routine use, to another federal agency for purposes of National Security review (35 U.S.C. 181) and for review pursuant to the Atomic Energy Act (42 U.S.C. 218(c)).

7. A record from this system of records may be disclosed, as a routine use, to the Administrator, General Services, or his/her designee, during an inspection of records conducted by GSA as part of that agency's responsibility to recommend improvements in records management practices and programs, under authority of 44 U.S.C. 2904 and 2906. Such disclosure shall be made in accordance with the GSA regulations governing inspection of records for this purpose, and any other relevant (i.e., GSA or Commerce) directive. Such disclosure shall not be used to make determinations about individuals.

8. A record from this system of records may be disclosed, as a routine use, to the public after either publication of the application pursuant to 35 U.S.C. 122(b) or issuance of a patent pursuant to 35 U.S.C. 151. Further, a record may be disclosed, subject to the limitations of 37 CFR 1.14, as a routine use, to the public if the record was filed in an application which became abandoned or in which the proceedings were terminated and which application is referenced by either a published application, an application open to public inspections or an issued patent.

9. A record from this system of records may be disclosed, as a routine use, to a Federal, State, or local law enforcement agency, if the USPTO becomes aware of a violation or potential violation of law or regulation.

Electronic Patent Application Fee Transmittal

Application Number:	
Filing Date:	
Title of Invention:	REMOVAL OF TRIVIAL MERGE CANDIDATES AND MERGE CANDIDATE COMPARISON
First Named Inventor/Applicant Name:	Yunfei Zheng
Filer:	Kelly Patrick Fitzgerald/Julia Ehrreich
Attorney Docket Number:	1212-009USP1/120469

Filed as Large Entity

Provisional Filing Fees

Description	Fee Code	Quantity	Amount	Sub-Total in USD($)
Basic Filing:				
Provisional application filing	1005	1	250	250
Pages:				
Claims:				
Miscellaneous-Filing:				
Petition:				
Patent-Appeals-and-Interference:				
Post-Allowance-and-Post-Issuance:				
Extension-of-Time:				

Description	Fee Code	Quantity	Amount	Sub-Total in USD($)
Miscellaneous:				
			Total in USD ($)	**250**

Electronic Acknowledgement Receipt

EFS ID:	11355052
Application Number:	61556761
International Application Number:	
Confirmation Number:	5025
Title of Invention:	REMOVAL OF TRIVIAL MERGE CANDIDATES AND MERGE CANDIDATE COMPARISON
First Named Inventor/Applicant Name:	Yunfei Zheng
Customer Number:	15150
Filer:	Kelly Patrick Fitzgerald/Julia Ehrreich
Filer Authorized By:	Kelly Patrick Fitzgerald
Attorney Docket Number:	1212-009USP1/120469
Receipt Date:	07-NOV-2011
Filing Date:	
Time Stamp:	20:32:12
Application Type:	Provisional

Payment information:

Submitted with Payment	yes
Payment Type	Deposit Account
Payment was successfully received in RAM	$250
RAM confirmation Number	6724
Deposit Account	501778
Authorized User	

The Director of the USPTO is hereby authorized to charge indicated fees and credit any overpayment as follows:

Charge any Additional Fees required under 37 C.F.R. Section 1.16 (National application filing, search, and examination fees)

Charge any Additional Fees required under 37 C.F.R. Section 1.17 (Patent application and reexamination processing fees)

Charge any Additional Fees required under 37 C.F.R. Section 1.19 (Document supply fees)

Charge any Additional Fees required under 37 C.F.R. Section 1.20 (Post Issuance fees)

Charge any Additional Fees required under 37 C.F.R. Section 1.21 (Miscellaneous fees and charges)

File Listing:

Document Number	Document Description	File Name	File Size(Bytes)/ Message Digest	Multi Part /.zip	Pages (if appl.)
1	Transmittal of New Application	Transmittal.pdf	63602 eb0130cfd7785882241398228dae44336b3935ab	no	1
Warnings:					
Information:					
2		Application.pdf	159688 34d0fbcd8f1ada60df69014b341d8efa35753ac5	yes	21
	Multipart Description/PDF files in .zip description				
	Document Description		**Start**	**End**	
	Specification		1	19	
	Claims		20	21	
Warnings:					
Information:					
3	Drawings-only black and white line drawings	FIGURES.pdf	23559 da11d7d679fe6261138fb9bba2c14d587a5a329d	no	6
Warnings:					
Information:					
4	Application Data Sheet	ADS.pdf	837015 81f6f4652934ac484eef0d8f1a60f5f3715f2dd7	no	5
Warnings:					
Information:					
5	Fee Worksheet (SB06)	fee-info.pdf	29827 92ed3bb2bf3efae7b6da4e2194f6ca155c9f9e90	no	2
Warnings:					
Information:					
		Total Files Size (in bytes):	1113691		

This Acknowledgement Receipt evidences receipt on the noted date by the USPTO of the indicated documents, characterized by the applicant, and including page counts, where applicable. It serves as evidence of receipt similar to a Post Card, as described in MPEP 503.

New Applications Under 35 U.S.C. 111
If a new application is being filed and the application includes the necessary components for a filing date (see 37 CFR 1.53(b)-(d) and MPEP 506), a Filing Receipt (37 CFR 1.54) will be issued in due course and the date shown on this Acknowledgement Receipt will establish the filing date of the application.

National Stage of an International Application under 35 U.S.C. 371
If a timely submission to enter the national stage of an international application is compliant with the conditions of 35 U.S.C. 371 and other applicable requirements a Form PCT/DO/EO/903 indicating acceptance of the application as a national stage submission under 35 U.S.C. 371 will be issued in addition to the Filing Receipt, in due course.

New International Application Filed with the USPTO as a Receiving Office
If a new international application is being filed and the international application includes the necessary components for an international filing date (see PCT Article 11 and MPEP 1810), a Notification of the International Application Number and of the International Filing Date (Form PCT/RO/105) will be issued in due course, subject to prescriptions concerning national security, and the date shown on this Acknowledgement Receipt will establish the international filing date of the application.

UNITED STATES PATENT AND TRADEMARK OFFICE

UNITED STATES DEPARTMENT OF COMMERCE
United States Patent and Trademark Office
Address: COMMISSIONER FOR PATENTS
P.O. Box 1450
Alexandria, Virginia 22313-1450
www.uspto.gov

APPLICATION NUMBER	FILING or 371(c) DATE	GRP ART UNIT	FIL FEE REC'D	ATTY.DOCKET.NO	TOT CLAIMS	IND CLAIMS
61/556,761	11/07/2011		250	1212-009USP1/120469		

CONFIRMATION NO. 5025

FILING RECEIPT

15150
Shumaker & Sieffert, P. A.
1625 Radio Drive, Suite 300
Woodbury, MN 55125

OC000000051058804

Date Mailed: 11/23/2011

Receipt is acknowledged of this provisional patent application. It will not be examined for patentability and will become abandoned not later than twelve months after its filing date. Any correspondence concerning the application must include the following identification information: the U.S. APPLICATION NUMBER, FILING DATE, NAME OF APPLICANT, and TITLE OF INVENTION. Fees transmitted by check or draft are subject to collection. Please verify the accuracy of the data presented on this receipt. **If an error is noted on this Filing Receipt, please submit a written request for a Filing Receipt Correction. Please provide a copy of this Filing Receipt with the changes noted thereon. If you received a "Notice to File Missing Parts" for this application, please submit any corrections to this Filing Receipt with your reply to the Notice. When the USPTO processes the reply to the Notice, the USPTO will generate another Filing Receipt incorporating the requested corrections**

Applicant(s)

Yunfei Zheng, SAN DIEGO, CA;
Xianglin Wang, SAN DIEGO, CA;
Marta Karczewicz, SAN DIEGO, CA;

Power of Attorney:
Jeffrey Joseph--54204

If Required, Foreign Filing License Granted: 11/18/2011
The country code and number of your priority application, to be used for filing abroad under the Paris Convention, is **US 61/556,761**
Projected Publication Date: None, application is not eligible for pre-grant publication
Non-Publication Request: No
Early Publication Request: No
Title

REMOVAL OF TRIVIAL MERGE CANDIDATES AND MERGE CANDIDATE COMPARISON

PROTECTING YOUR INVENTION OUTSIDE THE UNITED STATES

Since the rights granted by a U.S. patent extend only throughout the territory of the United States and have no effect in a foreign country, an inventor who wishes patent protection in another country must apply for a patent in a specific country or in regional patent offices. Applicants may wish to consider the filing of an international application under the Patent Cooperation Treaty (PCT). An international (PCT) application generally has the same effect as a regular national patent application in each PCT-member country. The PCT process **simplifies** the filing of patent applications on the same invention in member countries, but **does not result** in a grant of "an international

patent" and does not eliminate the need of applicants to file additional documents and fees in countries where patent protection is desired.

Almost every country has its own patent law, and a person desiring a patent in a particular country must make an application for patent in that country in accordance with its particular laws. Since the laws of many countries differ in various respects from the patent law of the United States, applicants are advised to seek guidance from specific foreign countries to ensure that patent rights are not lost prematurely.

Applicants also are advised that in the case of inventions made in the United States, the Director of the USPTO must issue a license before applicants can apply for a patent in a foreign country. The filing of a U.S. patent application serves as a request for a foreign filing license. The application's filing receipt contains further information and guidance as to the status of applicant's license for foreign filing.

Applicants may wish to consult the USPTO booklet, "General Information Concerning Patents" (specifically, the section entitled "Treaties and Foreign Patents") for more information on timeframes and deadlines for filing foreign patent applications. The guide is available either by contacting the USPTO Contact Center at 800-786-9199, or it can be viewed on the USPTO website at http://www.uspto.gov/web/offices/pac/doc/general/index.html.

For information on preventing theft of your intellectual property (patents, trademarks and copyrights), you may wish to consult the U.S. Government website, http://www.stopfakes.gov. Part of a Department of Commerce initiative, this website includes self-help "toolkits" giving innovators guidance on how to protect intellectual property in specific countries such as China, Korea and Mexico. For questions regarding patent enforcement issues, applicants may call the U.S. Government hotline at 1-866-999-HALT (1-866-999-4158).

LICENSE FOR FOREIGN FILING UNDER

Title 35, United States Code, Section 184

Title 37, Code of Federal Regulations, 5.11 & 5.15

GRANTED

The applicant has been granted a license under 35 U.S.C. 184, if the phrase "IF REQUIRED, FOREIGN FILING LICENSE GRANTED" followed by a date appears on this form. Such licenses are issued in all applications where the conditions for issuance of a license have been met, regardless of whether or not a license may be required as set forth in 37 CFR 5.15. The scope and limitations of this license are set forth in 37 CFR 5.15(a) unless an earlier license has been issued under 37 CFR 5.15(b). The license is subject to revocation upon written notification. The date indicated is the effective date of the license, unless an earlier license of similar scope has been granted under 37 CFR 5.13 or 5.14.

This license is to be retained by the licensee and may be used at any time on or after the effective date thereof unless it is revoked. This license is automatically transferred to any related applications(s) filed under 37 CFR 1.53(d). This license is not retroactive.

The grant of a license does not in any way lessen the responsibility of a licensee for the security of the subject matter as imposed by any Government contract or the provisions of existing laws relating to espionage and the national security or the export of technical data. Licensees should apprise themselves of current regulations especially with respect to certain countries, of other agencies, particularly the Office of Defense Trade Controls, Department of State (with respect to Arms, Munitions and Implements of War (22 CFR 121-128)); the Bureau of Industry and

Security, Department of Commerce (15 CFR parts 730-774); the Office of Foreign AssetsControl, Department of Treasury (31 CFR Parts 500+) and the Department of Energy.

NOT GRANTED

No license under 35 U.S.C. 184 has been granted at this time, if the phrase "IF REQUIRED, FOREIGN FILING LICENSE GRANTED" DOES NOT appear on this form. Applicant may still petition for a license under 37 CFR 5.12, if a license is desired before the expiration of 6 months from the filing date of the application. If 6 months has lapsed from the filing date of this application and the licensee has not received any indication of a secrecy order under 35 U.S.C. 181, the licensee may foreign file the application pursuant to 37 CFR 5.15(b).

SelectUSA

The United States represents the largest, most dynamic marketplace in the world and is an unparalleled location for business investment, innovation and commercialization of new technologies. The USA offers tremendous resources and advantages for those who invest and manufacture goods here. Through SelectUSA, our nation works to encourage, facilitate, and accelerate business investment. To learn more about why the USA is the best country in the world to develop technology, manufacture products, and grow your business, visit SelectUSA.gov.