Operating Instructions

MarSurf M 300 + RD 18

Mahr

Mahr GmbH · Carl-Mahr-Straße 1 · D-37073 Göttingen · Telefon +49 551 7073-0 · Fax +49 551 71021

DE	**Deutsch**
EN	**English**
FR	**Français**
IT	**Italiano**
ES	**Español**
PT	**Português**
CS	**Česky**
TR	**Türkçe**

Dear valued customer,

Congratulations on choosing a product by Mahr GmbH. We kindly request that you follow the instructions below in order to ensure the continued precision operation of the instrument over the long-term.

We operate a policy of continuous improvement and are constantly developing our products, especially with regard to renaming of type designations. It is possible therefore that there may be slight differences between the text and illustrations in this document and the product in your possession. We reserve the right to make changes to the design and scope of supply, the right to undertake further technical developments, and all rights relating to translation of this documentation.

© by Mahr GmbH, Göttingen

Permitted Uses

The MarSurf M 300 surface texture measuring instrument may only be used for surface measurement and evaluation.

The MarSurf M 300 surface texture measuring instrument can be used both close to production areas and in inspection rooms.

Do not modify the instrument. This may create additional hazards that cannot be sufficiently protected by the safety mechanisms.

The operating, maintenance and repair requirements specified in these operating instructions must be followed.

Disposal

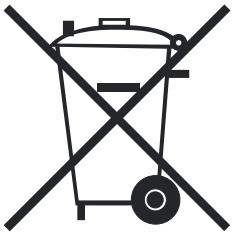

Electronic devices, including accessories and used batteries (rechargeable and disposable), must not be disposed of as regular garbage, since they contain high-value materials that can be recycled and reused. European Directive 2002/96/EG (WEEE) requires that electrical and electronic devices must be collected separately to unsorted municipal waste so that they may be subsequently reprocessed. The crossed-out garbage can symbol indicates that separate collection is necessary.
Mahr GmbH carries out the redemption and disposal of its electrical and electronic products in accordance with legal requirements. Please contact your local service representative.

Mahr GmbH	Phone:	+49 551 70730
Carl-Mahr-Straße 1	Fax:	+49 551 71021
D-37073 Göttingen	E-mail:	info@mahr.de
Germany	Internet:	www.mahr.de

Mahr GmbH is registered in Germany with the Elektro-Altgeräte-Register (EAR, 'national register for used electrical appliances') under WEEE-Reg.-No. DE 56624193.

Safety Instructions

This instrument complies with the relevant safety regulations. It was dispatched from our production facility in good condition and perfect working order. Failure to follow the instructions given below can cause personal injury or death.

1. Before you connect up and use the equipment for the first time, read the accompanying documentation.

   Follow the safety precautions detailed in the operating instructions.

   Keep the documentation close to the equipment ready for quick reference.

2. The instrument is designed for surface texture measurement only, as specified in the permitted uses.

3. This instrument is NOT designed for operation in explosive environments. The equipment can emit electrical sparks which could trigger an explosion.

4. Follow safety precautions, accident prevention regulations and internal company instructions. You should request further information from your company safety officer.

5. Only the AC adapter provided with the device should be used for charging the internal rechargeable battery or supplying power to the device when used in stationary applications.

6. Ensure the appropriate mains adapter for the mains socket is connected to the AC adapter.

7. Before you connect up the equipment, check that the power supply voltage marked on the type plate of the AC adapter matches that of the local mains power supply system. DO NOT under any circumstances connect the AC adapter if the voltage is not the same!

8. Only use the AC adapter in enclosed areas.

9. Never carry out measurements on machines while they are running or on moving items.

10. Maintenance tasks must only be carried out by trained technicians. Disconnect the power supply before replacing the battery.

11. Only Mahr-trained personnel are permitted to carry out work on this instrument and its components. Protective covers must only be removed by trained technicians and only when servicing is required. Any procedures carried out on this instrument that go beyond those tasks described in the operating instructions will void the equipment warranty. Mahr GmbH declines all liability for damage caused by unauthorized procedures.
12. Do not use fluids on or near the instrument and its components.
13. Do not use cleaning materials which contain harmful substances. Do not use solvents.
14. Inspect the connecting cables at regular intervals and check for damage. Change damaged cables immediately (Mahr service personnel).

For the MarSurf M 300 and RD 18, Bluetooth technology has as yet been approved in Europe and North America only! Approval in further countries is in progress. In case of doubt please contact your Mahr partner!

Order No.	Last Modification	Version
3757325	07/22/2009	Valid as of version v1.06-22
		Translation of the original operating instructions

Table of Contents

Permitted Uses 1

Disposal 1

Safety Instructions 2

1 Functions 6

1.1 Memory Capacity 7

2 Operating Elements 9

3 Commissioning 14

3.1 Switching on the Measuring Instruments 14

3.2 Switching off the Measuring Instruments 14

3.3 Charging the Battery 15

3.4 Loading Paper 16

3.5 Making Instrument Settings 16

3.5.1 Operating Elements in the Menus 16

3.5.2 Basic Settings 17

3.5.3 Measuring and Evaluation Conditions in Accordance with ISO / ASME / JIS 19

3.5.4 Measuring and Evaluation Conditions in Accordance with MOTIF 23

3.5.5 Parameters and Tolerance Limits 24

3.5.6 Record Contents 25

3.6 Programming function keys F1 and F2 26

4 Preparing for Measurement 27

4.1 Setting up the Mobile Measuring Station 27

4.2 Setting up the Stationary Measuring Station 28

4.3 Setting up the Drive Unit and Pick-up 29

4.3.1 Switching the Traverse On/Off 29

4.3.2 Selecting the Pick-up Type (Meas. Range) 30

4.3.3 Setting up a Bluetooth Connection 30

5 Measurement and Evaluation 31

5.1 Measurement 31

5.2 Evaluation 32

5.2.1 "Result" View 32

5.2.2 Printing a Record or an Individual Function 33

5.3 Available Parameters 36

5.4 Saving Profiles 39

5.5 Saving Measuring Results 40

6 Calibrating and Setting the Pick-up Correction Value 44

6.1 Setting the Pick-up Correction Value 45

6.2 Calibration 45

7 Troubleshooting 47

8 Interfaces 52

8.1 Connecting the MarSurf M 300 to a Computer (USB Interface) 52

8.2 Remote Control via the MarConnect Interface 53

9 Maintenance, Cleaning and Transport 53

9.1 Checking the Integrated Standard of the RD 18 56

9.2 Replacing the Battery 56

9.3 Installing a Software Update 58

10 Scope of Delivery 59

11 Accessories, Spare Parts and Wear Parts 60

12 Warranty 61

13 Declarations of Conformity ... 62

14 Index 64

The following symbols are used in these operating instructions:

General information.

Important information. Non-observance of this information can result in incorrect measurements or even damage to the instruments!

1 Functions

Mechanical characteristics

The MarSurf M 300 is a compact surface texture measuring instrument for mobile use under shop floor conditions. The maximum measuring range is 350 µm *(0.014 in)* (-200 µm to +150 µm) *(-0.008 in to +0.006 in)*.

With the corresponding MarSurf RD 18 drive unit measurements can be performed in any measuring position without the need for setup times. The maximum traversing length is 17.5 mm *(0.700 in)*. The instrument is easy to use and complies with DIN EN ISO 3274.

The MarSurf M 300 and all Mahr pick-ups are balanced at the factory. For high-precision measurements using the stylus method and subsequent checks, an automatic dynamic calibration function is available. A standard is integrated in the MarSurf RD 18 for this purpose. [1]

PHT pick-ups have an innovative open skid [1] that virtually eliminates deposits of dirt and oil.

The bow-type vertical adjusters [2] for setting the height of the MarSurf RD 18 drive unit allow many different forms of support (stable three-point support, four-point support, e. g. for cylindrical testpieces, combination with the pick-up protection, etc.) and make vertical adjustment very easy.

The rugged housing makes the MarSurf M 300 ideal for operation under severe conditions. The instrument combines an ergonomic design with clearly arranged operating elements and a large, easy-to-read LCD.

Its compact form and low weight (approx. 1 kg / 2.*21 lbs*) make it ideal for mobile use. Thanks to the transport case and the shoulder belt, it is easy to carry around. The built-in rechargeable battery offers enough capacity for several days' work [3].

The instrument's AC adapter comes with three exchangeable mains adapters, allowing the MarSurf M 300 and its RD 18 drive unit to be connected directly to the mains all over the world.

Possible instrument settings

All the functions supported by the instrument are set out in a logically structured menu.
Instrument settings can be blocked and also protected against unauthorized modification by means of a code number.

The operator can switch between ISO (DIN), ASME, JIS and MOTIF standards to select the traversing length and for evaluation purposes.

When measurements are performed in accordance with ISO (DIN), ASME or JIS, the recorded profile is filtered with a phase-correct profile filter (Gaussian filter) complying with DIN EN ISO 11562. A shorter cutoff can also be selected for this purpose.
Even inexperienced users can perform correct, reproducible surface texture measurements: If this function is active, the instrument detects periodic and aperiodic profiles and automatically sets the standard cutoff and associated traversing length in accordance with DIN EN ISO 4288. [1]

1 patented

2 Patent pending

3 The capacity is sufficient for approx. 1,000 measurements (depending on the traversing length and the settings in the "Record" menu).

Evaluation

Most of the parameters stipulated in ISO (DIN), ASME, JIS and MOTIF are available to evaluate the measured profile (see Section 5.3).

The evaluation conditions can be set, e.g. reference line and intersection line for material ratio *Rmr* (equiv. to *tp* in accordance with ASME and JIS), symmetrical or asymmetrical intersection lines for peak count *RPc*, operators A and B for the MOTIF evaluation, and intersection lines for zone widths *CR*, *CF*, *CL*.

In order to monitor tolerances, tolerance limits can be set for all selected parameters. If limits are exceeded, this is indicated on the display and in the measuring record.

Results and settings can be displayed using either the metric or the Imperial system of units.

The integrated thermal printer with graphics support can output entire measuring records with characteristic curves and profile diagrams as well as individual functions, e. g. an individual list or curve.

The internal USB memory can store up to 30 profiles or 40,000 results.

Interfaces

Using Bluetooth technology, the MarSurf M 300 can be connected with various MarSurf RD 18 drive units (see Section 4.3.3). The instruments comply with Bluetooth specification 2.0.

The MarSurf M 300's USB interface allows it to be connected directly to a PC. It is treated like a USB memory stick and detected without a driver.
This allows measuring results and profiles to be transferred to the PC for evaluation, e. g. with the MarWin software MarSurf XR 20 or XP 20.

The "MarSurf PS1 / M 300 Explorer" software (see Section 10) enables records of the profiles and measuring results to be saved and printed.

The MarConnect interface can be used to start the instrument remotely.

Accessories

The extensive range of accessories for the MarSurf M 300 and RD 18 enable a wide variety of applications (see Section 10):

- The end face vee-block allows measurements on end faces of planar and cylindrical workpieces.
- For testpieces such as crankshafts or camshafts which are measured in the axial direction, an optional adapter for transverse tracing is available.

Operating conditions

Storing/transport temperature range:
-15 °C to +55 °C *(5°F to 131°F)*
Working/operating temperature range:
+5 °C to +45 °C *(41°F to 113°F)*
Relative humidity:
non-condensing, 30 % up to max. 85 %
Protection class:
MarSurf M 300: IP42
MarSurf RD 18: IP40

1.1 Memory Capacity

Each file type is stored in its own folder in the internal USB memory:

"BITMAP"
contains company logos with the file extension "*.BMP" (Windows bitmap).

"PROFILE"
contains
- Profile files with the file extension "*.PCD" (Perthometer Concept format).
  These files can be read and evaluated using the MarSurf XR 20 or XP 20 software.
- Profile files with the file extension "*.TXT" (ASCII format).

"RESULT"
contains results files with the file extension "*.S2R".

These files can be transferred to a PC via the USB interface (see Section 8.1).

If only files of a single type are stored in the USB memory, the following maximum number of files of a given type can be stored:

File type	**Number of bytes per file**		**Max. number of files**
Results file (*.S2R)	1 KB 2 KB 3 KB 5 KB	for 10 meas. with 4 parameters for 20 meas. with 4 parameters for 50 meas. with 4 parameters for 100 meas. with 4 parameters	approx. 1350 approx. 675 approx. 450 approx. 335
Profile file (*.PCD)	45 KB	with $n = 5$	approx. 30
Profile file (*.TXT)	66 KB to 88 KB	with $n = 5$	approx. 15 to 20

2 Operating Elements

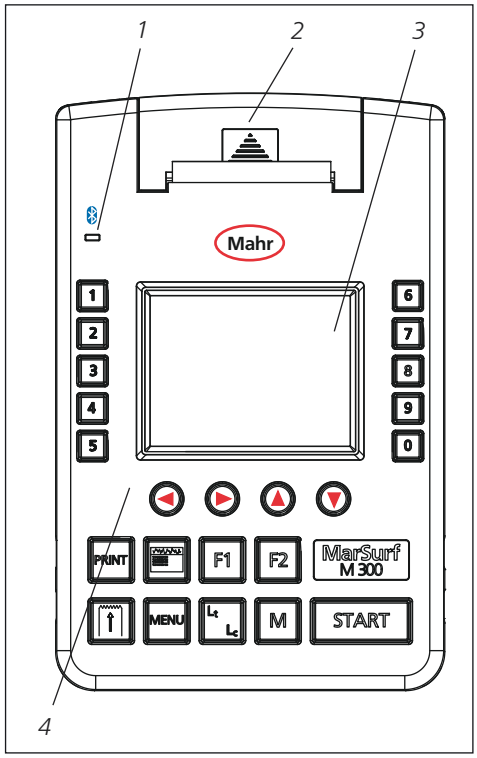

Fig. 1
Operating elements of the MarSurf M 300 surface texture measuring instrument (front)

1 *Symbol for Bluetooth connection; LED lights up in blue when there is a Bluetooth connection with a MarSurf RD 18.*
2 *Printer cover*
3 *Display*
4 *Keypad*
1 *to* **0** *Depending on the situation: Select the functions displayed. Used for alphanumeric input.*
◄ ► ▲ ▼ *Arrow keys for alphanumeric input.*

PRINT *Opens the "Print" menu. Displays the "Result" view.*
F1, **F2** *Function keys to select a user-programmable function.*
Paper feed key moves the paper out of the printer as long as it is held down.
MENU *Depending on the situation: Displays the main menu. Aborts alphanumeric input.*
Lt/Lc *With ISO, ASME, JIS: Sets*[4] *the cutoff and the traversing length or the automatic selection of cutoff and traversing length. With MOTIF: Sets the traversing length.*
M *Displays the "Measuring Station" view.*
START *Depending on the situation: Switches the M 300 on.*[5] *Starts a measurement. Aborts a measurement in progress, the search for drive units or a record output. Takes over alphanumeric input.*

For the following key combinations, hold down the **START** *key and then press the key indicated:*

START + **M** *Switches the M 300 and the selected RD 18 off.*

4 The instrument settings cannot be modified if they are blocked (see Section 3.5.2).

5 Only possible if the reset switch *(12)* is in the "I" position.

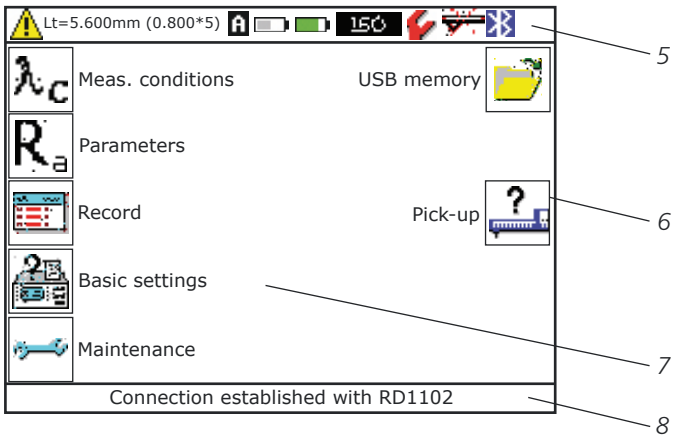

Fig. 2
Display of the MarSurf M 300 surface texture measuring instrument

5 *Top status bar* *(Diagram: Not all status bar elements can appear at the same time in measuring mode)*

Non-standard measuring conditions

Lt=5.600mm (0.800*5) *Traversing length Lt (Cutoff Lc × number n of sampling lengths) in accordance with ISO, ASME, JIS*

Lt=16.00mm *Traversing length Lt in accordance with MOTIF*

A *Automatic setting of cutoff and traversing length*

Battery status: left M 300, right RD 18 (: battery almost empty)

ISO, **ASME**, **JIS**, **MOTIF** *Standard*

Maintenance interval has expired

Selected pick-up type is not calibrated

Bluetooth connection with an RD 18 drive unit

6 *Buttons*

Opens the "Measuring conditions" menu

Opens the "Parameters" menu

Opens the "Record" menu

Opens the "Basic settings" menu

Opens the "Maintenance" menu

Opens the "USB memory" menu

Opens the "Pick-up" menu

7 *Main menu*

8 *Bottom status bar*

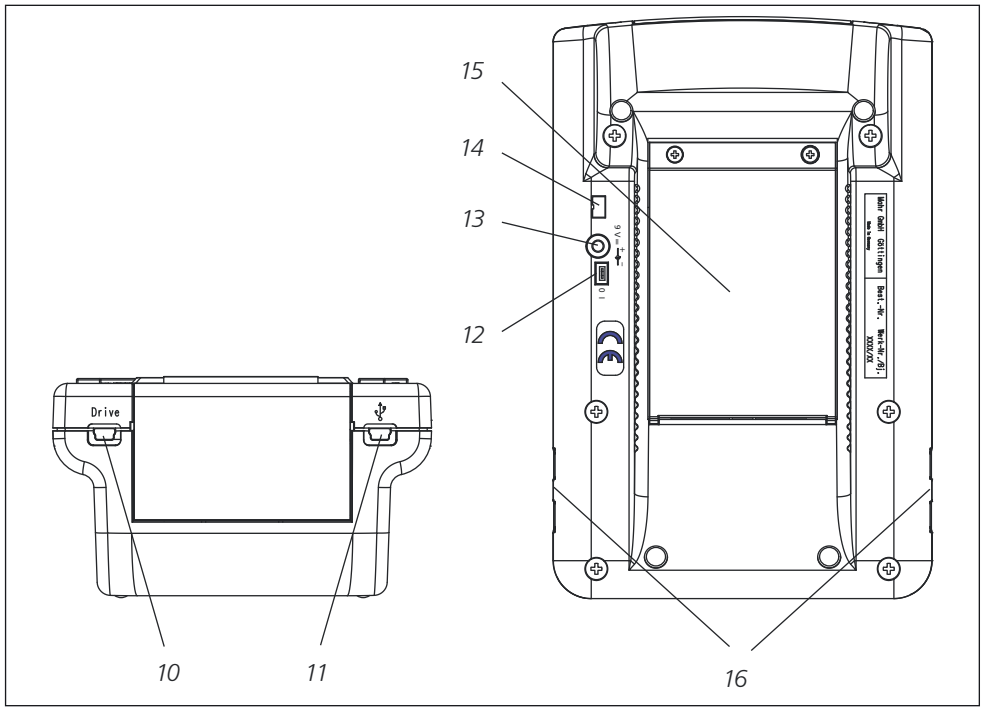

Fig. 3
Connections of the MarSurf M 300 surface texture measuring instrument (back side and bottom)

10	DRIVE	*Connection [6] for MarSurf RD 18 drive unit*
11	⚲	*USB interface for connection to a PC [7]*
12	0 / I	*Reset switch "0": As supplied (power supply disconnected), "I": Operating status*
13	9 V =	*Connection for AC adapter*
14		*MarConnect interface*
15		*Battery compartment*
16		*Eyes for shoulder belt*

6 instead of the Bluetooth connection

7 with the Windows 2000 or Windows XP operating system

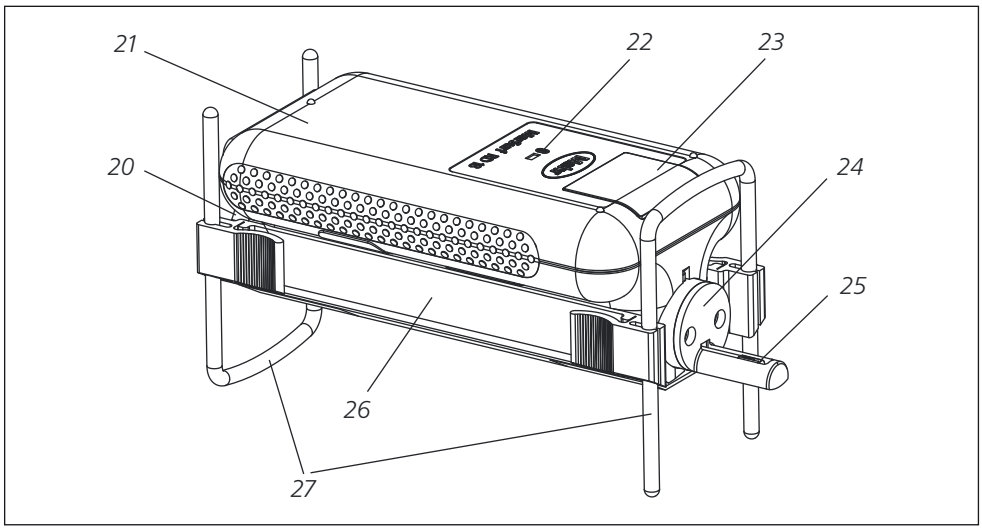

Fig. 4
MarSurf RD 18 drive unit with height adjustment accessory

20 Drive unit,
can be rotated and moved longitudinally,
with various lock-in positions

21 Housing
Top: Three-point support for upside-down measurements
Bottom: Vee-block for cylindrical test-pieces,
4 internal threads for attaching accessories
Inside: Standard

22 Symbol for Bluetooth connection;
LED lights up in blue when there is a Bluetooth connection with a MarSurf M 300;
LED blinks during a measurement in progress.

23 Green **START** *key*
Depending on the situation:
Switches the RD 18 on. [8]
Starts a measurement.
Aborts a measurement in progress.
Pressing for approx. 3 seconds switches the RD 18 and the M 300 off.

24 Pick-up protection
can be used in conjunction with a vertical adjuster or a measuring stand as a second support point

25 Pick-up

26 Mount for attaching accessories
(vertical adjusters, end face vee-block)

27 Pair of bow-type vertical adjusters,
arranged as three-point support
(can also be used individually)

8 Only possible if the reset switch *(29)* is in the "I" position.

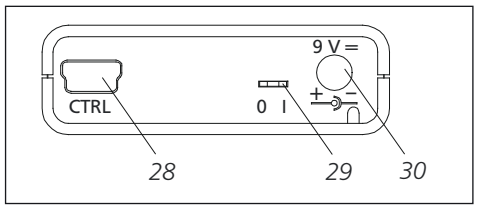

Fig. 5
MarSurf RD 18 connections

28	CTRL	*Connection* [9] *for the MarSurf M 300 measuring instrument*
29	0 / I	*Reset switch* *"0": As supplied (power supply disconnected),* *"I": Operating status*
30	9 V =	*Connection for AC adapter*

The **cable with two mini-plugs** can be used to create a cable connection between the MarSurf M 300 (connection "DRIVE", *10*) and the MarSurf RD 18 (connection "CTRL", *28*).
If there is no cable connection, the MarSurf M 300, attempts to create a Bluetooth connection with the most recently selected MarSurf RD 18 drive unit.

The **USB cable** (with a mini-USB plug and a USB plug) can be used to connect the MarSurf M 300 (USB interface ⭠, *11*) with the USB interface of a PC.

For mobile use, the **shoulder belt** can be attached through the eyes *(16)* in the MarSurf M 300.

The MarSurf M 300 and the MarSurf RD 18 along with the standard accessories can be carried around easily in the **transport case**.

9 instead of the Bluetooth connection

3 Commissioning

The MarSurf M 300 is delivered with the power supply isolated to ensure that the built-in battery does not lose its charge if stored for a lengthy period.

1. Move the reset switch on the MarSurf M 300 *(12)* and the RD 18 *(29)* to the right into the "I" position to make both instruments ready for operation.

3.1 Switching on the Measuring Instruments

For a Bluetooth connection:

Please follow the instructions for setting up a Bluetooth connection given in Section 4.3.3.

1. Hold down the green key *(23)* of the MarSurf RD 18 approx. 1 second.
   The LED next to the Bluetooth symbol *(22)* lights up in blue and indicates operational readiness.
2. Then hold down the green **START** key of the MarSurf M 300 approx. 1 second.
3. The MarSurf M 300 creates a Bluetooth connection with the most recently selected RD 18. While the connection is being established, this symbol is displayed:

   When the connection has been created, the LED below the Bluetooth symbol (1) lights up and the symbol is displayed in the top status bar.

If a cable connection already exists:

1. Hold down the green **START** key of the MarSurf M 300 approx. 1 second.
   The LED next to the Bluetooth symbol *(22)* of the MarSurf RD 18 lights up in blue for a short period and indicates operational readiness.

3.2 Switching off the Measuring Instruments

To switch the MarSurf M 300 and RD 18 off (if they do not turn off automatically [10]):

1. Hold down the **START** key of the MarSurf M 300 and press the **M** key.
   Or hold down the green key *(23)* on the MarSurf RD 18 approx. 3 seconds.
   The MarSurf M 300 and the selected MarSurf RD 18 are switched off.
2. To switch off other drive units:
   Hold down the respective green key *(23)* on the MarSurf RD 18 approx. 3 seconds.
3. To move the drive unit and pick-up to the safe parking position for transport:
   Push the drive unit forward out of the housing, turn it 180° to the right (stylus tip points upwards) and pull it back into the housing (guide pin engages with guide groove) until the rear lock-in position is reached *(see Fig. 14 in Section 6.2)*.

To switch off the instruments completely (disconnect them from power), move the reset switches *(12)* and *(29)* to the left into the "0" position.
The instrument settings, including date and time, are retained.

10 The instruments do not automatically turn off if the timeout is switched off (i. e. if the "Timeout" check box is not activated in the "Basic settings" menu) or if the MarSurf M 300 is connected to the mains with the AC adapter.

3.3 Charging the Battery

The MarSurf M 300 and the MarSurf RD 18 are powered by a built-in battery.

Both instruments can be supplied with electricity for stationary operation by connecting the AC adapter that came with delivery to the MarSurf M 300 and creating a cable connection between the two instruments (see below).

The batteries of both instruments should be charged

- if the instrument is being commissioned for the first time,
- if around 3 months have passed since the battery was last charged,
- if the symbol is displayed in the top status bar (i. e. the battery is down to around 15 % of its capacity),
- if no measurement is possible, even though the symbol is not yet displayed. [11]

For charging, only use the AC adapter that came with delivery!
If other AC adapters are used, the MarSurf M 300 or RD 18 may be damaged and any warranty will be rendered null and void.

To prepare the AC adapter:

1. Select the appropriate mains adapter and insert it into the AC adapter.

To charge the MarSurf M 300 battery:

1. Connect the AC adapter to the "9 V ⎓" socket *(13)* on the MarSurf M 300 and plug it into the mains socket.

   During the charging process, the four grey bars in the left battery symbol appear and disappear in sequence.

To charge the MarSurf RD 18 battery:

1. Connect the AC adapter to the "9 V ⎓" socket *(30)* on the MarSurf RD 18 and plug it into the mains socket.

   During the charging process, the corresponding battery status is displayed in the right battery symbol.

The MarSurf RD 18 can also be charged when the AC adapter is connected to the MarSurf M 300, and both instruments are connected to each other with the cable supplied with two mini-plugs ("DRIVE", *10* and "CTRL", *28*).

Once the AC adapter unit has been connected, measurements can be carried out immediately.

The battery will be fully charged after approx. 7 hours (M 300) or 1 hour (RD 18) and the instrument automatically switches from rapid charge to trickle charge. [12]

11 This can happen after long periods of storage, for example.

12 The charging time increases when instruments are switched on.

3.4 Loading Paper

To load a paper roll:

1. Pull the printer cover *(2)* back in the direction of the arrow *(see Fig. 1)*. Then turn the device around so that the rear side is facing forward *(see Fig. 6)*.
2. If necessary, remove the empty roll from the paper compartment.
3. Flip the pressure strip *(31)* up.
4. Insert the new paper roll *(32)* (5450105) into the paper compartment with the beginning of the roll down *(see symbol in the paper compartment)*.
5. Feed the beginning of the roll evenly into the paper infeed below the rubber roller.
6. Insert the paper until the end projects approx. 2 cm beyond the rubber roller.
7. Flip the pressure strip *(31)* down again.
8. Replace the printer cover *(2)* and push it back until it locks into place.
   The paper must stick out over the printer cover.

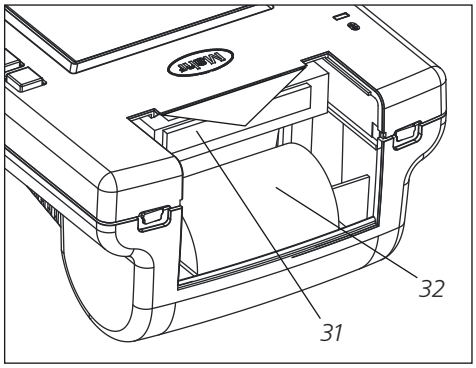

Fig. 6
Paper compartment of the MarSurf M 300

31 Pressure strip
32 Paper roll

3.5 Making Instrument Settings

The basic setting

— Standard

and the measuring conditions

— Traversing length *Lt*
— Ls filter
— Number *n* of sampling lengths
  (in accordance with ISO, ASME, JIS)
— Pre-travel *Lv* / post-travel *Ln*
  (in accordance with ISO, ASME, JIS)

must be changed before a measurement is performed.
All further settings can be changed before or after the measurement.

The instrument settings cannot be modified if they are blocked (i. e. if the "Blocking" check box is activated in the "Basic settings" menu; see Section 3.5.2).

To retain modified instrument settings after the MarSurf M 300 is switched off, an error-free measurement must be carried out with these settings.

3.5.1 Operating Elements in the Menus

The operating elements used in the menus are shown below:

Button

e. g. Basic settings

A function can be activated with a button or the respective assigned key (e. g. the "Basic settings" menu with key **4**).

Use the button or the **MENU** key to leave the menu.

Selection button

e. g. ▼ Standard ISO

With a selection button or the respective assigned key users can select from among several settings (e. g. "Standard" with key **3**). Each time the key is pressed, the next entry in the stored list is selected and displayed.

Check box

e. g.
Timeout ☒
Blocking ☐

A check box can be used to switch a function on or off. In this example, "Timeout" is switched on and "Blocking" is switched off.

Scrollbar

If not all of the menu elements can be displayed at once, a scrollbar appears at the edge of the display. With the arrow keys ▼ and ▲ the slide can be moved down or up.

Input box

e. g. Mahr GmbH

Numbers and text can be input into the various menus, e. g. tolerance limits or a company head. This alphanumeric input can be made with the arrow keys and the keys **1** to **0**:

- ◄ deletes the character left of the cursor in the input field
- ► moves the cursor in the input box to the right
- ▲ moves the cursor to the beginning of the input box
- ▼ moves the cursor to the end of the input box

To make an alphanumeric input:

1. Press the key to select the button (e. g. select the button with the 1st line "Mahr GmbH" of the company head with key **7**).
2. If necessary delete the characters with ◄.
3. Use the keys **1** to **0** to enter the characters. For buttons that have multiple characters, quickly press the key several times in succession in order to select another character (similar to using a mobile phone).
4. Confirm the input with **START** or cancel with **MENU**.

3.5.2 Basic Settings

To modify the basic settings:

1. Open the "Basic settings" menu by pressing the key.

Selecting the standard

The operator can switch between ISO, ASME, JIS and MOTIF standards to select the traversing length.

The selected standard is displayed in the top status bar *(5) (see Fig. 2)*.
When switching among standards, non-standard measuring conditions are automatically reset. The traversing length may have to be reselected.

If the **ISO, ASME or JIS standard** is selected, the R-profile will be evaluated.

If the **MOTIF standard** is selected, the P-profile will be evaluated. MOTIF parameters are evaluated in accordance with ISO 12085.
The number of sampling lengths and the cutoff (in accordance with ISO, ASME, JIS) cannot be modified.

Switching the timeout on/off

To save battery power, the switch-on time can be limited using a timeout function.
When timeout is switched on, the MarSurf M 300 and the selected RD 18 switch off automatically after approx. two minutes if no key is pressed within this time period.
The instrument settings used to perform the last error-free measurement are retained. The results of the last measurement are also retained.

The timeout can be deactivated for continuous operation in mobile applications.

Timeout is not in effect if the MarSurf M 300 is connected to the mains with the AC adapter.

Switching blocking for instrument settings on/off (code number protection)

The instrument settings can be blocked. They can also be protected against unauthorized changes by means of a code number. The code number is also requested for certain functions in the "USB memory" menu.

The code number "00000" is set at the factory. This setting allows any user to change the instrument settings, including switching blocking on/off. For this reason it is recommended to enter a code number when starting up the MarSurf M 300 for the first time.

The instrument settings cannot be modified if they are blocked (i. e. if the "Blocking" check box is activated in the "Basic settings" menu).

To enter or change the code number:

1. If necessary, switch off blocking for instrument settings (see below).
2. In the "Basic settings" menu select the "Code number" button by pressing the key.
3. Enter the previous code number with the keys **1** to **0** and press the **START** key.
4. Use the keys **1** to **0** to enter any five-digit code number between "1" and "99999" and press the **START** key.
5. If necessary, switch blocking for instrument settings back on again (see below).

With blocking switched off, the code number can be changed by any user.

To switch blocking on/off:

1. Activate or deactivate the "Blocking" check box in the "Basic settings" menu by pressing the key.
2. Enter the code number with the keys **1** to **0** and press the **START** key.

   If an incorrect code number was entered, the "Blocking" check box will be displayed again with the previous setting.

To retain the new instrument settings (i. e. also the settings for blocking) after the MarSurf M 300 is switched off, an error-free measurement must be carried out with these settings.

Setting the date

The date is saved for each measurement.
The format depends on the language selected. For "English" it is "Month/Day/Year" (mm/dd/yyyy).
When printing the record, the date can be output.

When entering the date, the order is "Day Month Year" (see text above the input box) for all languages.

When entering the date, the ◄ key does not delete the character left of the cursor, but moves the cursor to the left.

Setting the time

For every measurement, the time is saved in the "Hour:Minute" (hh:mm) format.
When printing the record, the time can be output.

When entering the time, the ◄ key does not delete the character left of the cursor, but moves the cursor to the left.

3.5.3 Measuring and Evaluation Conditions in Accordance with ISO / ASME / JIS

To display the measuring and evaluation conditions in accordance with ISO / ASME / JIS:

1. Open the "Measuring conditions" menu by pressing the key.
2. Press the **1** key to display "ISO / ASME / JIS" in the respective button.
   On the right side the measuring and evaluation conditions in accordance with ISO / ASME / JIS will be displayed.

Selecting the traversing length

The top status bar *(5)* displays the length of the traversing length *Lt*, the length of the cutoff *Lc* and the number *n* of sampling lengths, e. g. "Lt=5.600mm (0.800*5)" *(see Fig. 2)*.

1. Press the **Lt/Lc** key repeatedly until the required cutoff and the resulting standard traversing length are displayed.

   If "Lt=*****mm (******5)" is displayed for *Lt* and *Lc* instead of a value and the symbol **A** appears to the right, the automatic setting of cutoff and traversing length has been set.

The length of the traversing length in accordance with ISO, ASME or JIS is determined by the cutoff, which is to be selected according to *Table 2*.

Three cutoffs are available with the MarSurf M 300. The cutoff defines which elements of the measured profile will be attributed to roughness.

Lt	*Lc* *n*	*lm*
1.750 mm	(0.250 * 5)	1.250 mm
5.600 mm	(0.800 * 5)	4.000 mm
17.50 mm	(2.500 * 5)	12.50 mm
0.070 in	(0.010 * 5)	0.050 in
0.224 in	(0.032 * 5)	0.160 in
0.700 in	(0.100 * 5)	0.500 in

Tab. 1
Available traversing lengths (and cutoffs) in accordance with ISO, ASME, JIS

Usually the traversing length consists of the pre-travel *Lv*, five sampling lengths *lr* (= evaluation length *lm*) and the post-travel *Ln*. The sampling lengths and the pre- and the post travel are exactly as long as the standard cutoff *(see Table 2)*.

If the automatic setting (symbol **A**) of cutoff and traversing length is switched on, during the measurement the instrument first checks if it is a periodic profile:

- With a periodic profile, the instrument automatically sets the standard cutoff and associated traversing length according to the *RSm* value *(see Table 2)*.
- With an aperiodic profile, the cutoff and traversing length are set automatically according to the *Rz* value *(see Table 2)*.

The settings calculated for *Lt* and *Lc* are displayed in the top status bar after the measurement has been carried out.

Switching the Ls profile filter on/off

If the Ls profile filter is switched on, the profile is filtered after the measurement with a cutoff wavelength of 2.5 µm or 8 µm *(100 µin or 320 µin)*, depending on the traversing length.
The Ls profile filter can also be switched on and off in the "Measuring station" view.

Switching profile inversion on/off

Usually a profile is evaluated in the same way that it is measured, i. e. profile peaks are also handled as such.
However, for replica measurements profile inversion should be switched on. This causes the measured profile to be mirrored on the diagram mean line so that the evaluation is based on a profile in the correct position.

If a profile is evaluated with profile inversion, the profile type is displayed in the "Result" view with a minus sign (e. g. "R–" or "P–").

i For the following parameters, the measuring value is affected by profile inversion: *Rp*, *RpA*, *Rpm*, *Rv*, *Rpk*, *Rk*, *Rvk*, *Mr1*, *Mr2*, *A1*, *A2*, *Vo*, *RPc*, *Rmr*, *tp*, *RSm*, *S*, *Rsk*, *R*, *AR*, *Rx*, *W*, *CR*, *CF*, *CL*.

Selecting the number of sampling lengths

If standard traverse lengths cannot be used with the testpiece, in accordance with the standard, the number *n* of sampling lengths can be reduced or increased. [13]

If $n \neq 5$, the symbol ⚠ appears in the top status bar.

i By selecting a standard traversing length with **Lt/Lc**, the number *n* of sampling lengths is reset to 5.

Selecting the cutoff

When evaluating in accordance with ISO, ASME or JIS, digital filtering generates the roughness profile from the measured profile.

The phase-correct profile filter (Gaussian filter) is used. When evaluating the parameters in accordance with DIN EN ISO 13565-2, the special filtering method with groove suppression as per DIN EN ISO 13565-1 is used. The filter is characterized by the cutoff.

The cutoff is the wavelength *Lc* of a sinusoidal profile, the amplitude of which will be transmitted by the phase-correct filter to a level of 50 %. The cutoff defines which elements of the measured profile will be attributed to the roughness.

The cutoff and traversing length are selected together before the measurement by pressing **Lt/Lc**.

DIN EN ISO 4288 states that the cutoff for standard measurements should be selected as follows:

- for periodic profiles, according to the mean width *RSm* of the profile elements,
- and for aperiodic profiles, depending on *Ra* or *Rz*

(see Table 2).

13 If the automatic setting **A** of cutoff and traversing length is set, the number *n* of sampling lengths cannot be modified.

In special cases, the next shortest cutoff may be used instead of the standard one required by ISO 4288. The "Lc short" setting can also be implemented after the measurement. [14]

After the setting is made, the cutoff value is displayed in the top status bar *(5) (see Fig. 2)*.
When the short cutoff is switched on, the symbol ⚠ appears in the top status bar.

ℹ If a standard traversing length is selected by pressing **Lt/Lc**, the short cutoff is deactivated again.

Selecting the length of the pre- and post-travel

If standard traverse lengths cannot be used with the testpiece, the pre-travel *Lv* and post-travel *Ln* can be shortened [15]. In the setting "Lv short" *Lv* and *Ln* are half as long as the standard cutoff.

When the short pre- and post-travel are switched on, the symbol ⚠ appears in the top status bar.

ℹ By selecting a standard traversing length with **Lt/Lc** the short pre- and post-travel are switched off again.

Periodic profiles	**Aperiodic profiles**		**Cutoff**	**Sampling length Evaluation length**
RSm in mm	*Rz* in µm	*Ra* in µm	*Lc* in mm	*lr* in mm *lm* in mm (with $n = 5$)
$RSm \leq 0.13$	$Rz \leq 0.5$	$Ra \leq 0.1$	0.25	0.25 1.25
$0.13 < RSm \leq 0.4$	$0.5 < Rz \leq 10$	$0.1 < Ra \leq 2$	0.8	0.8 4
$0.4 < RSm$	$10 < Rz$	$2 < Ra$	2.5	2.5 12.5

Tab. 2
Determining the cutoff
in accordance with DIN EN ISO 4288

14 If the automatic setting **A** of cutoff and traversing length is set, the cutoff cannot be modified.

15 If the automatic setting **A** of cutoff and traversing length is set, the length of the pre- and post-travel cannot be modified.

Setting the intersection lines for peak count

To calculate the peak count *RPc*, an upper intersection line C1 *(35)* and a lower intersection line C2 *(37)* are placed into the roughness profile. Both intersection lines are parallel to the diagram mean line *(36)*.
The distance (in µm or µin) from the intersection lines to the diagram mean line can be set to symmetrical or asymmetrical values. [16]

To set a symmetrical distance from the intersection lines C1 and C2 to the diagram mean line:

1. Set the upper intersection line C1.
   The value for the lower intersection line C2 is automatically set to -C1.

To set an asymmetrical distance from intersection lines C1 and C2 to the diagram mean line:

1. First set the value for C1. The value for the lower intersection line C2 is automatically set to -C1.
2. Then select the "C2" button by pressing the key and set the desired distance C2 for the lower intersection line.
   If the value is negative, the intersection line lies below the diagram mean line.

Each time the value for C1 is changed, C2 is reset to -C1. If C2 ≠ -C1 is required, C2 must then be reset.

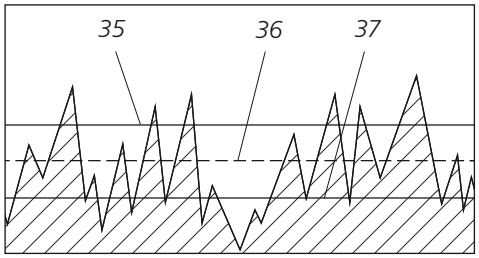

Fig. 7
Intersection lines for peak count

35 Upper intersection line C1
36 Diagram mean line
37 Lower intersection line C2

Setting the reference line and the intersection line for the material ratio

To calculate the material ratio *Rmr* (*tp* for ASME), an intersection line C (level p for ASME) *(45)* is placed into the profile. The position of this intersection line is determined by its distance (in µm or µin) to the reference line CREF *(40)*.

The reference line is parallel to the diagram mean line; its position is determined by a material ratio value (e. g. "CREF 5.0 %").

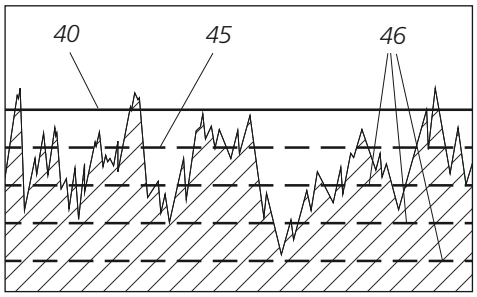

Fig. 8
Reference line and intersection line for material ratio

40 Reference line CREF
45 Intersection line C (p for ASME) for material ratio
46 Additional intersection line for material ratio list

16 The values for C1 and C2 should be entered in steps of 0.1 µm. The profile resolution of up to 7 nm means that there is no point having smaller steps.

Three different intersection lines "C" or "p" can be set so that three individual values for *Rmr* or *tp* can be output. If the value is negative, the intersection line lies below the reference line.

For the material ratio list ("Rmr list", "tp list" for ASME; see Section 5.2.2) the highest value "C" or "p" (i. e. the button below "CREF") determines the distance of the first intersection line *(45)* from the reference line *(40)* and the distance of the intersection lines *(46)* from each other.

3.5.4 Measuring and Evaluation Conditions in Accordance with MOTIF

To display the measuring and evaluation conditions in accordance with MOTIF:

1. Open the "Measuring conditions" menu by pressing the key.
2. Press the **1** key to display "MOTIF" in the respective button.
   On the right side the measuring and evaluation conditions in accordance with MOTIF will be displayed.

Selecting the traversing length

The top status bar *(5)* displays the length of the traversing length *Lt*, e. g. "Lt =16.00 mm" *(see Fig. 2)*.

1. Press the **Lt/Lc** key repeatedly until the required traversing length is displayed.

Lt		
1.000 mm	or	0.040 in
2.000 mm	or	0.080 in
4.000 mm	or	0.160 in
8.000 mm	or	0.320 in
12.00 mm	or	0.480 in
16.00 mm	or	0.640 in

Tab. 3
Available traversing lengths in accordance with MOTIF

Switching the Ls profile filter on/off

If the Ls profile filter is switched on, the profile is filtered after the measurement with a cut-off wavelength of 2.5 µm or 8 µm *(100 µin or 320 µin)*, depending on the traversing length.
The Ls profile filter can also be switched on and off in the "Measuring station" view.

Switching profile inversion on/off

Usually a profile is evaluated in the same way that it is measured, i. e. profile peaks are also handled as such.
However, for replica measurements profile inversion should be switched on. This causes the measured profile to be mirrored on the diagram mean line so that the evaluation is based on a profile in the correct position.

If a profile is evaluated with profile inversion, the profile type is displayed in the "Result" view with a minus sign (e. g. "R–" or "P–").

For MOTIF parameters, the measuring value is affected by profile inversion.

Setting the operators for MOTIF evaluation

When calculating the measuring results for the MOTIF parameters, operators are used which define the maximum length (in mm or in) of the roughness motifs (operator A) or the waviness motifs (operator B).

ISO 12085 states that operators A and B are selected according to the expected length of the motifs.

Unless otherwise specified, the default values are A = 0.5 mm and B = 2.5 mm.

Operator A	Operator B	Traversing length	Evaluation length
in mm	in mm	in mm	in mm
0.02 0.1 0.5	0.1 0.5 2.5	0.64 3.2 16	0.64 3.2 16

Tab. 4
Determining the operators A and B in accordance with ISO 12085

Setting the intersection lines for zone widths

With the three-zone measurement, zone widths *CR*, *CF* and *CL* are calculated. For each of these parameters, two intersection lines are specified (in %), which determine the position of the respective zone in the material ratio curve *(48)*.

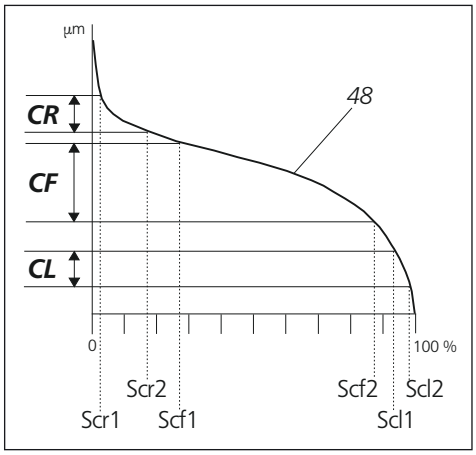

Fig. 9
Intersection lines for three-zone measurement

48 *Material ratio curve*
Scr1, Scr2: *Upper and lower intersection lines for CR*
Scr1, Scr2: *Upper and lower intersection lines for CF*
Scr1, Scr2: *Upper and lower intersection lines for CL*

3.5.5 Parameters and Tolerance Limits

To select the parameters that are to be evaluated in the "Result" view and in the record:

1. Open the "Parameters" menu by pressing the key.
2. Press the **1** key to display the parameters in accordance with "ISO / ASME / JIS" or in accordance with "MOTIF".
3. Select the parameters to be evaluated in sequence by pressing the key (e. g. "Rmax" with key **0**) and activating the "Calculate" check box. [17]
4. To enter tolerance limits for the selected parameter:
   - Use the **8** key to select the upper tolerance limit "▲TOL" and enter the desired value.
   - Use the **9** key to select the lower tolerance limit "▼TOL" and enter the desired value.
5. Activate the button by pressing the key.
6. The selected parameters are displayed with the tolerance limits in the "Parameters" menu.

   If the value "0.00" appears for "▲TOL" or "▼TOL", this tolerance limit has not been defined.
   When the value "0.00" is set for "▲TOL" **and** "▼TOL", no tolerance monitoring occurs for these parameters.

17 Or activate the "All" check box to evaluate all parameters in accordance with "ISO / ASME / JIS" or "MOTIF".

When evaluating the selected parameters, the tolerance limits are checked:

– If the tolerance is exceeded for one of the selected parameters, after a measurement this parameter is displayed first.

– Incidences where tolerances were exceeded are displayed in the "Result" view and in the printed record:
  If the upper tolerance limit was exceeded, a plus sign appears between the measuring result and the unit (e. g. "Ra 1.752+µm"); if the lower tolerance limit is exceeded, a minus sign appears.

– No tolerance violations are indicated in the results file, which can be transferred to a PC after saving the results.

If one of the parameters selected for the measuring record is deactivated, the corresponding tolerance limits are deleted.

If the "All" check box is deactivated, the tolerance limits for all parameters are deleted except for *Ra* and *Rz* for ISO and JIS, *Ra* for ASME, *R* for MOTIF.

Information regarding the available parameters can be found in Section 5.3.

3.5.6 Record Contents

To select the contents of the record:

1. Open the "Record" menu by pressing the key.
2. Activate the "Auto printing" check box if the record is to be automatically printed after each error-free measurement.
3. Activate the "Date" and "Time" check boxes if the date and time of the measurement are to appear in the record. [18]
4. Press the **1** key to select which of the following record contents are to be displayed: "Diagrams", "Lists", "Record head" or "Company head".
5. For "Diagrams":
   - For the MarSurf M 300 the horizontal scale "HOR" is always set to "AUTO". In the "AUTO" setting the profile diagram is divided horizontally into sampling lengths.
   - The vertical scale "VER" is used to select how many micrometers (µm) or microinches (µi) of the profile and the material ratio curve are to be printed in one scale division in the scale grid. In the "AUTO" setting the M 300 automatically selects the proper vertical scale.
   - Activate the "Profile" and "Mr curve" check boxes if the profile and the material ratio curve are to appear in the record.
6. For "Lists":
   Activate the check boxes of the parameter lists that are to appear in the record.
7. For "Record head":
   - Activate the "Print texts" check box if the text of the following four input boxes is to appear in the record.
   - Enter the desired text for the record head into the four input boxes.

18 The date, time, pick-up name and measuring conditions (Lt, Ls, Lc) are only printed if one of the "Print texts" check boxes is activated.

If the four input boxes remain empty, the following record head automatically appears in the record:

Object Name #

8. For "Company head":
   - Activate the "Print texts" check box if the text of the following four input boxes is to appear in the record.
   - Enter the desired text for the company head into the four input boxes.

     If the four input boxes remain empty, no company head will be printed.

User-specific company logo

The user's company log can be displayed in the record on the right, next to the Mahr logo.
This company logo must already have been copied into the "BITMAP" folder of the MarSurf M 300 via the USB interface (see Section 8.1).

When preparing the company logo with appropriate software please note the following specifications:

– Windows bitmap, black and white
– Maximum width: 159 pixels
– Maximum height: 100 pixels

To load a user-specific logo:

1. Use the **MENU** key to select the main menu.
2. Open the "USB memory" menu by pressing the key, then open the "Company logo" menu.
3. Activate the "Load logo" button by pressing the key.
   All previously stored bitmaps are displayed on the right.
4. Select one of the bitmaps by pressing the key.
   The preview displays the bitmap. [19]
5. Activate the button by pressing the key.

To remove the current user-specific logo from the record:

1. Use the **MENU** key to select the main menu.
2. Open the "USB memory" menu by pressing the key, then open the "Company logo" menu.
3. Activate the "Quit logo" button by pressing the key.
   Or load another company logo (see above).

3.6 Programming function keys F1 and F2

Functions that should be able to be accessed quickly can be assigned to function keys **F1** and **F2**.
All menus or functions that can be selected using an icon button are programmable, e. g. "Save results":

Icon button: Save results

To assign a function to one of the function keys (e. g. "Save results"):

1. Display the desired icon button. In this example:
   - Use the **MENU** key to select the main menu.
   - Open the "USB memory" menu by pressing the key, then open the "Results" menu.

19 If an error message is displayed, please look up the meaning of the error number in Section 7.

2. Hold down the **START** key and select the desired icon button by pressing the respective key. In this example:

   - Key combination **START** + key **1**.

   The view with the function key assignments will be displayed.

3. Press function key **F1** or **F2**.

   The new assignment is displayed in the bottom status bar (e. g. "<F1> Save results"). The function key has been assigned the selected function.

When a programmed function key is pressed, the assigned function is displayed.

The function keys can be selected directly from most menus. However, if an entry is being performed, this must be quit first.

4 Preparing for Measurement

4.1 Setting up the Mobile Measuring Station

To set up the drive unit:

1. Carefully insert the pick-up *(25)* into the pick-up holder on the front face of the drive unit *(20)*; note the plug arrangement.

2. Screw the pick-up protection *(24)* firmly onto the front face of the drive unit.

   The pick-up protection should be used at all times if possible as it protects the pick-up from damage.
   Exception: When measuring in small-diameter bores or at points that are difficult to access.

   After changing the pick-up, the new pick-up should be calibrated or its correction value set (if it is known) (see Section 5).

3. If necessary, assemble other accessories such as the height adjustment – i. e. the holder (26) and one or both vertical adjusters *(27)* .

4. Place the drive unit in the correct measuring position by moving it longitudinally and rotating it. Guide pins on the drive unit help to find the ideal operating position.

Practical examples:

— The MarSurf RD 18 is positioned on the vee-block bottom or on the vertical adjusters; for measurement on level surfaces or in bores; stylus tip points downwards.

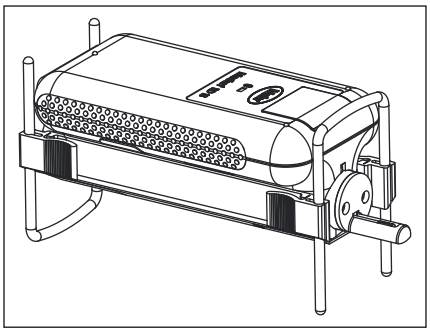

— The MarSurf RD 18 is positioned face down on its top side (three-point support); the vee-block serves as a holder; for measurement of cylindrical testpieces up to 1 kg *(2.205 lbs)*; stylus tip points upwards.
Depending on the length of the testpiece, the drive unit can be moved longitudinally into the front or rear lock-in position.

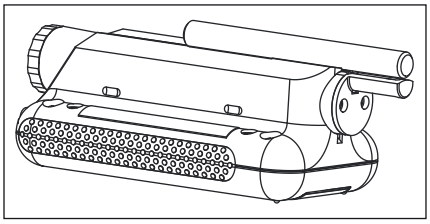

— The MarSurf RD 18 is held in a vertical position; the end face vee-block is placed at the circumference of a cylindrical testpiece; the stylus tip is in contact with the testpiece's end face.

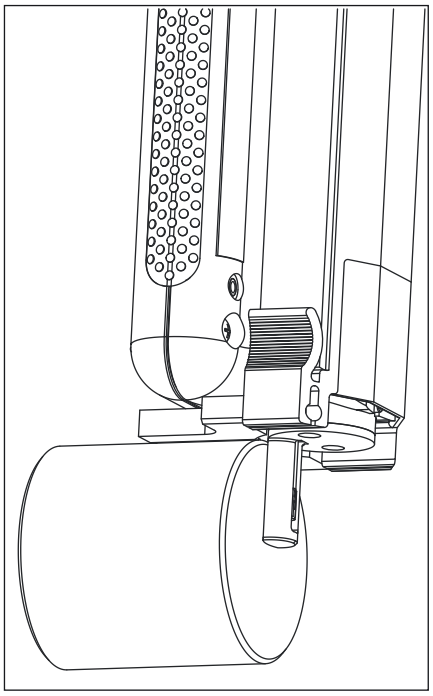

4.2 Setting up the Stationary Measuring Station

For stationary operation, the MarSurf RD 18 can be affixed to the measuring stand *(see Fig. 10)*. Measuring stands of types ST-D, ST-F and ST-G can be used.
A mount (6910201) is required for this which is available as an optional accessory.

To mount the MarSurf RD 18 on the measuring stand:

1. Set up the drive unit (see Section 4.1).

   The pick-up protection is not absolutely essential for operation on a measuring stand.

2. Position the MarSurf RD 18 with its bottom side up and then position the holder *(52)* such that both of its screws fit into the threads on the bottom side of the MarSurf RD 18.
3. Tighten the two screws on the mount.
4. Introduce the mount's bolt into the orifice on the cage of the column and clamp it in place using the two set screws (on the reverse of the cage).
5. Use the adjusting screw *(51)* to align the testpiece and the drive unit so that they are parallel with each other. The MarSurf RD 18 can be positioned at an incline of ±15°.
6. Turn the hand wheel for height adjustment *(50)* to lower the pick-up to the testpiece.
7. To exchange testpieces, the MarSurf RD 18 can be tipped up and locked in place while still in the holder.

It is essential that the two screws on the mount and the two set screws are properly tightened as otherwise the MarSurf RD 18 could come off and be damaged!

Both instruments can be supplied with electricity for stationary operation by connecting the AC adapter that came with delivery to the MarSurf M 300 and creating a cable connection between the two instruments (see Section 3.3).

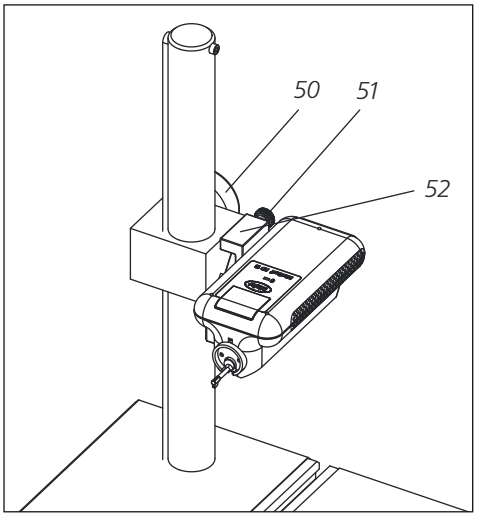

Fig. 10
Stationary measuring station with measuring stand

50 Hand wheel for height adjustment
51 Adjusting screw to correct inclination
52 Holder for MarSurf RD 18 (6910201)

4.3 Setting up the Drive Unit and Pick-up

4.3.1 Switching the Traverse On/Off

If the testpiece is moved by an external drive, e. g. the PURV rotation device, the pick-up traverse must be switched off.
The third-party drive system must be set to a drive speed of 0.5 mm/s.

1. Use the **M** key to display the "Measuring station" view.
2. Activate or deactivate the "Traverse" check box.

4.3.2 Selecting the Pick-up Type (Meas. Range)

Selecting the pick-up type ("Pxx-…") sets the pick-up measuring range (100 µm, 150 µm or 350 µm). This ensures that the entire pick-up measuring range can be used and that measuring errors (air measurements) are avoided.

1. Open the "Pick-up" menu by pressing the key.
2. Press the **1** key until the desired pick-up type is displayed in the respective button.
   On the right side the pick-up measuring range and the calibration data for the selected pick-up type will be displayed.

After changing the pick-up, the new pick-up should be calibrated or its correction value set (if it is known).
The calibration and setting of the pick-up correction value are described in Section 6.

4.3.3 Setting up a Bluetooth Connection

For the MarSurf M 300 and RD 18, Bluetooth technology has as yet been approved in Europe and North America only! Approval in further countries is in progress. In case of doubt please contact your Mahr partner!

To set up a Bluetooth connection between the MarSurf M 300 and the RD 18:

1. Open the "Pick-up" menu by pressing the key.
2. Activate the "Bluetooth" button by pressing the key.
   The selection button next to "Selected RD18" displays the most recently selected drive unit, e. g. "RD18 no. RD1102".

Using Bluetooth technology, the MarSurf M 300 can be connected with a RD 18 drive unit located within a maximum distance of 4 meters *(13 ft)* away.

The devices do not have to be positioned in a direct line of sight. Nevertheless, the connection can be disrupted by obstacles (e. g. human bodies or walls) or by other electronic devices (see Section 7).

Functions that use the Bluetooth technology increase electricity consumption and shorten the operation period for the instruments.

If measurements are to be taken with another RD 18:

1. Activate the "Update RD18 list" button by pressing the key.

   The MarSurf M 300 will search for all RD 18 drive units within 4 meters *(13 ft)* and will list them in the selection button.
2. Press the selection button next to "Selected RD18" until the desired drive unit is displayed. [20]
3. Activate the "Connect with RD18" button by pressing the key.

If the search for drive units is not successful (i. e. the selection button remains empty or "RD18 no. RD18NO" is displayed):

1. Check whether the distance between the devices is too great or if the connection is disrupted (see above).
2. Switch both devices off, then switch them back on again.

20 The number of the drive unit displayed corresponds with the "Werk-Nr." (serial no.) specified on the bottom of the RD 18.

The Bluetooth master name for the M 300 consists of an "M" and the "Werk-Nr." (serial no.) as indicated on the bottom of the instrument, e. g. "M01103". Usually the user does not have to make any changes here.

5 Measurement and Evaluation

5.1 Measurement

After the MarSurf M 300 is switched on, measurements can be carried out immediately, if the standard (see Section 3.5.2) and the measuring conditions (see Section 3.5.3) are set properly.

Measurement is normally at right angles to the direction of the testpiece's machining tracks. If no machining tracks are visible, carry out either two measurements 90° apart or three measurements 60° apart.

The surface to be measured should be cleaned before performing the measurement.

1. Bring the drive unit out of parking position and into measuring position (see Section 4.1).
2. Move the pick-up to the measuring position. The tracing arm must be parallel to the surface to be traced.
3. To display the stylus tip position, use the **M** key to open the "Measuring station" view.
4. Start the measurement with the green **START** key on the MarSurf M 300 or RD 18.

   During the measurement, a profile preview is displayed.

   If the automatic setting of cutoff and traversing length (symbol **A**) is switched on, "Lt=*****mm (******5)" appears in the top status bar during the measurement. The settings calculated for *Lt* and *Lc* are displayed there after the measurement has been carried out.
   The measuring range is automatically switched internally so that the best possible profile resolution is always used for measurement.

5. After the measurement has been carried out, the pick-up travels back to its starting position and the "Result" view is displayed (see Section 5.2.1).

Ensure that the upper measuring range limit is not exceeded during return travel as this can damage the pick-up!

Aborting the measurement

Measurement can be aborted at any time by pressing **START**. The traverse is stopped immediately. When starting a new measurement the pick-up travels back to its starting position.

Invalid measurement

Pick-up deflection is monitored during the measurement. If the measuring range is exceeded, the traverse is stopped immediately. An error message is displayed. When starting a new measurement the pick-up travels back to its starting position.

5.2 Evaluation

5.2.1 "Result" View

After an error-free measurement is carried out, the "Result" view is displayed with the profile that corresponds with the standard and the selected parameters.

The measurement can be evaluated immediately if the evaluation conditions (see Section 3.5.3) and some of the basic settings (see Section 3.5.2) are set correctly.

Profile diagram and material ratio curve

Depending on the standard selected, the profile diagram of the R-profile (ISO / ASME / JIS) or the P-profile (MOTIF) is displayed.

If the profile was evaluated with profile inversion, the profile type is displayed with a minus sign (e. g. "R–" or "P–").

To change the vertical scale VER for the profile diagram and the material ratio curve: [21]

- Activate the button by pressing the key to increase the vertical scale.
- Activate the button by pressing the key to decrease the vertical scale.

To display the material ratio curve MRC:

1. Activate the "PRF" button by pressing the key.
   Use the "MRC" button to display the profile diagram again.

Measuring results of the parameters

The parameters switched on in the "Parameters" menu are displayed below the profile diagram.

If the tolerance is exceeded for one of the selected parameters, this parameter is displayed first and a plus or minus sign appears between the measuring result and the unit.

To display the measuring results for the other selected parameters:

1. Using the arrow keys ▼ and ▲ the slide in the scrollbar can be moved down or up.

If "*****" is displayed instead of a measuring result the result cannot be calculated because the conditions for calculating the result for this parameter were not fulfilled (see Section 7).

21 The vertical scale set in the "Record" menu is not modified.

To evaluate other parameters without repeating the measurement:

1. Press the **MENU** key.
2. Open the "Parameters" menu by pressing the key and make the desired settings there (see Section 3.5.5).
3. Press the key.

If no parameter has been selected for the record, the following parameters are displayed automatically: *Ra* and *Rz* for ISO and JIS, *Ra* for ASME, *R* for MOTIF.

If parameters in accordance with MOTIF are calculated in an evaluation in accordance with ISO, ASME or JIS, it is important to note that the traversing length used as a basis does not correspond, in general, with the traversing length recommended in ISO 12085!

If parameters in accordance with ISO, ASME or JIS are calculated in an evaluation in accordance with MOTIF, it is important to note that the traversing length used as a basis does not correspond, in general, with the traversing length recommended in ISO 4288!

Information regarding the available parameters can be found in Section 5.3.

5.2.2 Printing a Record or an Individual Function

After an error-free measurement is carried out, a record with the selected record contents (see Section 3.5.6) is printed automatically if the "Auto printing" function is switched on in the "Record" menu.

To print the record manually:

1. Press the **PRINT** key.
   The "Print" menu opens.
2. Press **PRINT** again.

The parameters *A1*, *A2* and *Vo* are printed without their units because they cannot be displayed due to their length. In contrast, the parameter *Rsk* is nondimensional.
For the parameter *Rpc* the designation "/c" stands for the unit "/cm" and the designation "/i" for the unit "/in".
The designation "µi" stands for the unit "µin".

Printing individual functions

In the "Print" menu the following individual functions can be printed manually:

- Previous view (e. g. maintenance record)
- Profile diagram
- Material ratio curve
- Parameters
- Parameter lists

To print an individual function manually:

1. Press the **PRINT** key.
   The "Print" menu opens.
2. Select the individual function by pressing the key.
   The function is printed in accordance with the settings in the "Record" menu.

The composition of a few parameter lists is shown below *(see Fig. 11 to 13)*.

```
        55        56
Lc   GS      0.800 mm
Rmr( 2.14, 5.0)0.0 %
Rmr( 0.00, 5.0)5.0 %
Rmr(-1.00, 5.0) 14 %
Rmr(-2.00, 5.0) 31 %
Rmr(-3.00, 5.0) 52 %
Rmr(-4.00, 5.0) 73 %
Rmr(-5.00, 5.0) 88 %
Rmr(-6.00, 5.0) 98 %
Rmr(-7.00, 5.0)100 %
        57    58   59
```

Fig. 11
Material ratio list (Rmr list")
(for ASME: "tp list", list of profile bearing length ratios)

55 Filter type
56 Cutoff Lc
57 Distances (in µm or µin) [22]
of the intersection lines to the reference line CREF
58 Material ratio value (in %)
of the reference line CREF
59 Calculated material ratios

```
        55        56
Lc   GS      0.800 mm
Rdc(0.0,5.0) 0.44 µm
Rdc( 10,5.0)-0.15 µm
Rdc( 20,5.0)-0.32 µm
Rdc( 30,5.0)-0.42 µm
Rdc( 40,5.0)-0.50 µm
Rdc( 50,5.0)-0.57 µm
Rdc( 60,5.0)-0.66 µm
Rdc( 70,5.0)-0.76 µm
Rdc( 80,5.0)-0.89 µm
Rdc( 90,5.0)-1.04 µm
Rdc(100,5.0)-2.14 µm
        60   58   61
```

Fig. 12
Material ratio list graded in % ("Rdc list")
(for ASME: "Htp list", list of differences in the heights for two profile bearing length ratios)

55 Filter type
56 Cutoff Lc
60 Material ratio values (in %)
of the intersection lines
58 Material ratio value (in %)
of the reference line CREF
61 Calculated zone widths

22 The length unit of distances C or p is the same as for cutoff Lc *(56)*:
– Lc in mm = C (p) in µm,
– Lc in inch = C (p) in µinch.

	55	56
Lc	GS	0.800 mm
Rz		2.080 µm
Rmax		2.264 µm
Rzs		0.153 µm
Rz1		2.136 µm
Rz2		2.264 µm
Rz3		1.843 µm
Rz4		2.094 µm
Rz5		2.063 µm

Fig. 13
Rz list

55 Filter type
56 Cutoff Lc

In the Rz list, the mean peak-to-valley height *Rz* is given in the first result line, the maximum roughness depth *Rmax* in the second line, and the standard deviation *Rzs* of the peak-to-valley height values *Rz1* to *Rz5* in the third line. In the fourth result line and beyond, the peak-to-valley height values *Rz1* to *Rz5* from the sampling lengths are listed. [23]

The composition of the Rp list is analogous to that of the Rz list.

23 For n ≠ 5 the resulting number of peak-to-valley height values from the sampling lengths differs from 5.

5.3 Available Parameters

The following parameters are available in the MarSurf M 300:

Parameters as per ISO / ASME / JIS	**Meaning**	**Standards**
Ra	Arithmetic mean roughness *Ra*	DIN EN ISO 4287: 1998 ISO 4287: 1997 JIS B 0601: 1994 + 2001
Rq	Root mean square roughness *Rq*	DIN EN ISO 4287: 1998 ISO 4287: 1997 JIS B 0601: 2001
Rz	Mean peak-to-valley height *Rz* *Ry* (JIS B 0601: 1994) corresponds with *Rz*	DIN EN ISO 4287: 1998 ISO 4287: 1997 JIS B 0601: 2001
RzJ (JIS)	Mean height *RzJ* of profile elements	JIS B 0601: 1994 (formerly: ISO 4287/1: 1984)
Rmax	Maximum roughness height *Rmax* (formerly: DIN 4768: 1990)	VDA 2006 : 2002
Rp	Mean profile peak height *Rp*	DIN EN ISO 4287: 1998 ISO 4287: 1997 JIS B 0601: 2001
RpA (ASME)	Maximum profile peak height *RpA*	ASME B46.1-2002
Rpm (ASME)	Mean profile peak height *Rpm*	
Rv	Mean profile valley depth *Rv*	DIN EN ISO 4287: 1998 ISO 4287: 1997 JIS B 0601: 2001

Rpk	Reduced peak height *Rpk*	DIN EN ISO 13565-1 : 1998 DIN EN ISO 13565-2 : 1998 ISO 13565-1 :1996 ISO 13565-2 :1996 JIS B 0671-1 : 2002 JIS B 0671-2 : 2002
Rk	Core roughness depth *Rk*	
Rvk	Reduced valley depth *Rvk*	
Mr1	Smallest material ratio *Mr1* of the roughness core profile: Material ratio (in %) of the intersection line which separates the protruding peaks from the roughness core profile.	
Mr2	Largest material ratio *Mr2* of the roughness core profile: Material ratio (in %) of the intersection line which separates the deep valleys from the roughness core profile.	
A1	Profile peak range *A1* (in $\mu m^2/mm$)	
A2	Profile valley range *A2* (in $\mu m^2/mm$)	
Vo	Oil-retaining volume *Vo* (in mm^3/cm^2)	
Rt	Total height *Rt* of R-profile	DIN EN ISO 4287: 1998 ISO 4287: 1997 JIS B 0601: 2001
R3z	Arithmetic mean third peak-to-valley height *R3z*	DB N 31007: 1983
RPc	Peak count *RPc* (dependent on intersection lines C1 and C2): Number of profile elements (see *RSm*) per cm (or per inch) which first exceed the set upper intersection line C1 and then fall short of the lower C2.	EN 10049: 2005 ASME B46.1-2002 E DIN EN ISO 4287/A1: 2007-07 (D)
Rmr *tp*	Material ratio *Rmr* or *tp* (dependent on reference line CREF and intersection line C or p; 3 individual values can be selected) *tp* (JIS B 0601: 1994) corresponds with *Rmr*	DIN EN ISO 4287: 1998 ISO 4287: 1997 ASME B46.1-2002 JIS B 0601: 2001
RSm	Mean width *RSm* of profile elements (formerly: groove spacing)	DIN EN ISO 4287: 1998 ISO 4287: 1997 ASME B46.1-2002 JIS B 0601: 1994 + 2001
Rsk	Skewness *Rsk* of the profile	DIN EN ISO 4287: 1998 ISO 4287: 1997 ASME B46.1-2002 JIS B 0601: 2001
S	Mean spacing *S* of local profile peaks	JIS B 0601: 1994

Parameter as per MOTIF	Meaning	Standards
R	Mean depth *R* of roughness motifs (dependent on operators A and B)	DIN EN ISO 12085 : 1998 ISO 12085 : 1996 JIS B 0631 : 2000
AR	Mean width *AR* of roughness motifs (dependent on operators A and B)	
Rx	Maximum depth *Rx* of profile irregularity (dependent on operators A and B)	
W	Mean depth *W* of waviness motifs (dependent on operators A and B)	
CR	Zone width *CR* of the profile peak zone (French "critère de rodage") (dependent on intersection lines Scr1 and Scr2)	cf. *Pδc* (*Pdc*) in: DIN EN ISO 4287: 1998 ISO 4287: 1997 JIS B 0601 : 2001
CF	Zone width *CF* of the profile core zone (French "critère de fonctionnement") (dependent on intersection lines Scf1 and Scf2)	
CL	Zone width *CL* of the profile valley zone (French "critère de lubrification") (dependent on intersection lines Scl1 and Scl2)	

5.4 Saving Profiles

The MarSurf M 300 has integrated USB memory where up to 30 profile files (D-profiles) can be stored. [24]

To open the "Profiles" menu:

1. Use the **MENU** key to select the main menu.
2. Open the "USB memory" menu by pressing the key, then open the "Profiles" menu.

Some of the functions of the "USB memory / Profiles" menu can only be accessed after entering the code number. [25]

Profile files are saved in the "PROFILE" folder with the following structure:

P000_123.PCD
P000_123.TXT

- File extension (.PCD or .TXT) according to the profile format selected
- Number of the profile file (001 to 999), determined automatically
- Identifier for profile files

Selecting the profile format (.PCD or .TXT)

The profiles recorded by the MarSurf M 300 can be stored in two different profile formats:

- Profile files with the file extension ".PCD" (Perthometer Concept format)
  can be read and evaluated using the MarSurf XR 20 or XP 20 software.
- Profile files with the file extension "*.TXT" (ASCII format)
  are ASCII files in which the individual profile points are displayed as normalized profile values. The dimensional profile value in µm can be calculated by multiplying the standardized profile value with the vertical profile resolution ("RES").
  Profiles in ASCII format can be read with a conventional text editor or in a spreadsheet calculation program (e. g. Microsoft Excel).

Saving profiles automatically

If the automatic saving of profiles is switched on, each valid measurement is automatically saved in the internal USB memory. The file name is generated from the lowest free profile number and the file extension.

1. In the "Profiles" menu activate the "Auto saving" check box by pressing the key.

   For every subsequent measurement, the MarSurf M 300 will save the D-profile in a new profile file.

24 The possible number of profiles depends on the number *n* of sampling lengths and on the number of results files stored.

25 If the code number "00000" set at the factory is used, the "USB memory / Profiles" menu is freely accessible.

Saving profiles manually

To save the current profile manually in the selected profile format:

1. In the "Profiles" menu activate the "Save profile" button by pressing the key.

   The file name will be displayed at upper right with the lowest available profile file number.

2. If the profile is to be saved with the file name displayed at upper right:

   - Activate the "Save profile" button again.

   If the profile is to be saved with an existing file name:

   - In the "Selection" area, activate the file that is to be overwritten.
     The file name will be displayed at upper right.
   - Activate the "Save profile" button again.
   - Confirm the inquiry with the **4** key.

3. The folder and file name are displayed for the duration of the save procedure, e. g. "a:\PROFILE\P000_001.PCD".

Deleting one or more profile files

To delete a profile file (or all profile files) of the selected profile format:

1. In the "Profiles" menu activate the "Delete profile" button by pressing the key.

2. If an individual profile file is to be deleted:

   - Select the profile file by pressing the key.
   - Confirm the inquiry with the **4** key.

   If all profile files are to be deleted:

   - Activate the "All" check box.
   - Select one of the profile files to be deleted by pressing the key.
   - Confirm the inquiry with the **4** key.

Loading a profile file

To load a profile (with the selected profile format) from the USB memory for a new evaluation:

1. In the "Profiles" menu activate the "Load profile" button by pressing the key.

   All of the saved profile files are displayed on the right.

2. Select the profile file to be loaded by pressing the key.

3. The folder and file name are displayed for the duration of the load procedure, e. g. "a:\PROFILE\P000_001.PCD".

   The profile now loaded can be evaluated as usual by pressing the key (see Section 5.2).

5.5 Saving Measuring Results

The MarSurf M 300 has integrated USB memory where several measuring sequences, each with up to 500 results, can be saved as results files. [26]

26 The possible number of measurements depends on the number of parameters selected and on the number of profile files stored.

To open the "Results" menu:

1. Use the **MENU** key to select the main menu.
2. Open the "USB memory" menu by pressing the key, then open the "Results" menu.

Some of the functions of the "USB memory / Results" menu can only be accessed after entering the code number. [27]

Results files are saved in the "RESULT" folder with the following structure:

R000_123.S2R

- File extension (.S2R)
- Number of results file (001 to 999), can be modified
- Identifier for results files, can be modified

Saving results manually

Enter the desired settings before beginning a series of measurements (see Section 3.5).

To save the results for the selected parameters as well as the date and time of the most recent measurement:

1. In the "Results" menu activate the "Save results" button by pressing the key.

   The file name will be displayed at upper right with the lowest available results file number.

2. If the results are to be saved with the file name displayed at upper right:

   - Activate the "Save results" button again.

   If the results are to be saved with an existing file name:

   - In the "Selection" area, activate the button for the file that is to be overwritten.
     The file name will be displayed at upper right.
   - Activate the "Save results" button again.

     In this case, the results and the file header will be attached to the current file.

   If the results are to be saved with user-determined file name:

   - Press the **6** key next to the input box at upper right.
   - Enter the desired file name (max. 8 characters plus the file extension ".S2R"), press **START** and activate the "Save results" button again.

3. The folder and file name are displayed for the duration of the save procedure, e. g. "a:\RESULT\R000_001.S2R".

27 If the code number "00000" set at the factory is used, the "USB memory / Results" menu is freely accessible.

To save the results of subsequent measurements in the same file:

- After each measurement, activate the "Save results" button in the "Results" menu by pressing the key. [28]

As soon as the basic setting
– Standard
or one of the measuring conditions
– Traversing length *Lt*
– Number *n* of sampling lengths (in accordance with ISO, ASME, JIS)
– Cutoff *Lc* (in accordance with ISO, ASME, JIS)
is modified, the measuring sequence is considered finished.

The next time results are saved manually, a new file name will be used.

Saving results automatically

Enter the desired settings before beginning a series of measurements (see Section 3.5).

To save the future results for the selected parameters as well as the date and time of the measurement automatically after every measurement:

1. In the "Results" menu activate the "Auto saving" check box by pressing the key.

   For every subsequent measurement, the MarSurf M 300 will save the measuring results for the selected parameters as well as the date and time of the measurement in the same results file.

As soon as the "Auto saving" check box is deactivated
or the basic setting
– Standard
or one of the measuring conditions
– Traversing length *Lt*
– Number *n* of sampling lengths (in accordance with ISO, ASME, JIS)
– Cutoff *Lc* (in accordance with ISO, ASME, JIS)
is modified, the measuring sequence is considered finished.

To continue to save the results of subsequent measurements automatically:
Respond in the negative to the inquiry "Switch off results saving?" by pressing the **9** key.

The next time results are saved automatically, a new file name will be used.

Results file

A results file (text file) can be read with a conventional text editor or in a spreadsheet program (e. g. Microsoft Excel). The individual details are separated by a semicolon, and a point is used as the decimal separator.

The date is given in the format "Day. Month.Year" and the time in the format "Hour:Minute".

If no result could be calculated for a particular parameter, "*****" is output.

If the automatic setting (symbol **A**) of cutoff and traversing length was used for the measurement, the traversing length *Lt* and cutoff *Lc* are specified for each measurement.

28 The function "Save results" can also be assigned to a function key (see Section 3.6).

Results file	Meaning
[s2rmp]	Fixed file identifier
2	Number of parameters per measurement
MarSurf M 300	Name of the evaluation instrument
1	Type of limits (1 = tolerance limit)
Record head 1; Record head 2; Record head 3; Record head 4	Four lines of the record head (once)
Mahr GmbH;Carl-Mahr-Str. 1; 37073 Göttingen, Germany;Tel.: 0551 70730	Four lines of the company head (once)
0.300;2.500;	Upper limit for each parameter
0.000;0.000;	Lower limit for each parameter
Lt 5.60 mm;Lc 0.80 mm;n 5;A 0.50 mm; B 2.50 mm	Measuring conditions (once)
Date;Time;Ra ***** µm;Rz ***** µm	Column identifiers "Date", "Time", names of the selected parameters with the related units (once)
30.06.2008;14:28;0.291;2.113	Measurement 1: Date, time, calculated measuring results
30.06.2008;14:30;0.298;2.267	Measurement 2
30.06.2008;14:30;0.500;2.855	Measurement 3
@	Identifier for end of file

Tab. 5
Example of a results file

Deleting one or more results files

To delete a results file (or all results files):

1. In the "Results" menu activate the "Delete results" button by pressing the key.
2. If an individual results file is to be deleted:
   - Select the results file by pressing the key.
   - Confirm the inquiry with the **4** key.

If all results files are to be deleted:

- Activate the "All" check box.
- Select one of the results files to be deleted by pressing the key.
- Confirm the inquiry with the **4** key.

6 Calibrating and Setting the Pick-up Correction Value

The sensitivity of Mahr pick-ups is adjusted at the factory so they can be used for measurements straight away.

Sensitivity-matched pick-ups are set to their nominal sensitivity. If the value 0.0 % is displayed in the "Correction" input box in the "Pick-up" menu, the pick-up used will operate at nominal sensitivity.

If necessary, to reach a higher degree of precision, pick-ups can be calibrated [29]. Dynamic calibration determines the deviation of a pick-up from its nominal sensitivity. The instrument calculates a correction value to be taken into consideration in the evaluation.
This allows deviations lying within the tolerance for the entire measuring station (±15 %) to be compensated.

For calibration,
- a separate roughness standard (e. g PRN 10) or a separate geometric standard (e. g. PGN3)
- or the integrated standard (only for the PHT 6-350 standard pick-up)

can be used.

If the integrated standard is used for calibration, it should be checked at regular intervals using a calibrated skidless pick-up to ensure that the given *Rz* nominal value is still valid (see Section 9.1).

If the symbol is displayed in the top status bar, the selected pick-up type has not yet been calibrated or the calibration interval has passed.

To check the calibration data for the pick-up type in use:

1. Open the "Pick-up" menu by pressing the key.

   The information boxes "Last cal." and "Next cal." display the most recent and the next calibration to be carried out.

2. To modify the interval between the most recent and next calibration:

   - Activate the "Interval" button by pressing the key and enter the desired interval (in days).
     The date for the next calibration will be modified automatically.

Some of the functions of the "Pick-up" menu can only be accessed after entering the code number. [30]

To print the list of pick-up types and their correction values:

1. Display the "Pick-up" menu, then press the **PRINT** key.

2. In the "Print" menu select the "Previous view" button by pressing the key.

   If the calibration interval has passed for a particular pick-up or if it has not yet be calibrated, this is indicated with an asterisk following the measuring range, e. g. "T0 Pxx-350 350* 0".

29 The instrument settings cannot be modified if they are blocked (see Section 3.5.2).

30 If the code number "00000" set at the factory is used, the "Pick-up" menu is freely accessible.

6.1 Setting the Pick-up Correction Value

Users can also enter the pick-up correction value without an initial calibration [31]. For example, this possibility is useful when changing pick-ups if the correction value for the pick-up to be used is already known.

1. In the "Pick-up" menu activate the "Correction" button by pressing the key.
2. Set the correction value (value range –15 % to +15 %).
   The symbol in the top status bar will disappear.

6.2 Calibration

1. If using a separate standard:
   - Position the MarSurf RD 18 drive unit on the vee-block bottom such that the pick-up is positioned correctly on the roughness standard, i. e.
     – the stylus tip is perpendicular and
     – the entire traversing length is within the field of defined roughness.

   If using the integrated standard:
   - Push the drive unit forward out of the housing, turn it 180° to the right (stylus tip points upwards) and pull it back into the housing (guide pin engages with guide groove) until the rear lock-in position is reached. Then turn the drive unit over to its top side *(see Fig. 14)*.

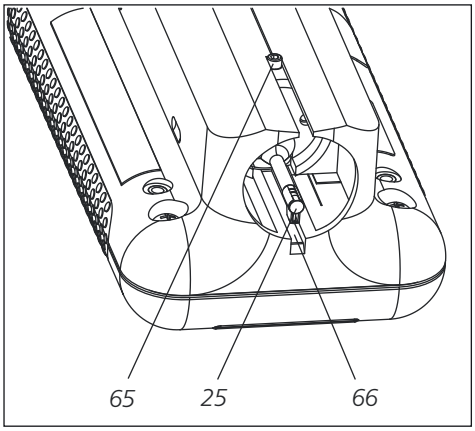

Fig. 14
Pick-up in calibration position / parking position

65 Guide pin in the rear lock-in position
25 Pick-up
66 Integrated standard

2. In the "Pick-up" menu select the "Calibrate (PGN 3)" button by pressing the key.

   If the standard JIS or MOTIF is set, it will automatically switch to ISO now.

   The cutoff $Lc = 0.800$ mm with traversing length $Lt = 5.600$ mm will be set automatically.
3. Read the *Rz* nominal value (for ISO, JIS, MOTIF) or the *Ra* nominal value (for ASME) from the bottom of the instrument [32] and enter it in the "Nom. val." input box.

31 The instrument settings cannot be modified if they are blocked (see Section 3.5.2).

32 If using a separate standard, read the nominal value from the calibration standard or the associated calibration certificate.

4. Press the **START** key.
   Three measurements are carried out automatically.
   After each measurement, the calculated *Rz* value or *Ra* value is displayed.
   After the 3rd measurement, the average of the three measured *Rz* values or *Ra* values is determined. This average is used to calculate a correction value.

   - If the correction value is in a range defined by ±15 % it is accepted into the instrument settings (display e. g. "Correction -4 %").
     The symbol in the top status bar will disappear.
   - If the correction value lies beyond the above-named range, "Correction value > ±15" is displayed.

     Remedy: confirm the message by pressing the **4** key. Check the measuring setup, the vertical alignment of the stylus tip and the *Rz* nominal value or *Ra* nominal value and repeat the calibration by pressing **START**.

5. If repeated attempts to calibrate do not lead to a viable result, the pick-up is probably defective. It should be send in to be tested.

7 Troubleshooting

The following remedies are recommended in the case of errors:

Error / Message	Source	Remedy
"*****" (instead of measuring value)	Condition for calculating the result is not satisfied.	
	For *Rmr* (*tp* for ASME): Total height *Rt* of the R-profile is ≤ 0.8 % of the measuring range.	No remedy.
	For *R3z*: There are not 3 peaks and 3 valleys present in each sampling length.	If necessary, select a longer traversing length.
	For *RzJ*: There are not 5 peaks and 5 valleys present in each sampling length.	If necessary, select a longer traversing length.
	For *RSm*: Arithmetic mean roughness *Ra* is ≤ 0.4 % of the measuring range.	No remedy.
	For *R*, *AR*, *Rx*, *W*: Evaluation of the motifs produces no roughness or waviness.	Check the setting of operators A and B.
	With *Rpk*, *Rk*, *Rvk*, *Mr1*, *Mr2*, *A1*, *A2*:	
	– Total height *Rt* of the R-profile is ≤ 0.8 % of the measuring range.	No remedy.
	– Less than 10 classes of the material ratio distribution are within the range of the core profile.	No remedy.
	– Material ratio curve is not S-shaped as stipulated by ISO 13565-2.	No remedy.
Battery symbol is displayed	Battery is nearly empty.	Charge the battery; approx. 7 hours (M 300) or 1 hour (RD 18) is required to charge the battery to full capacity. When the instrument is switched on, more time is required for charging.
Instrument not working after a battery change	Battery has not been inserted correctly.	Open the instrument, take out the battery and replace it according to the description (see Section 9.2).

Error / Message	Source	Remedy
Bluetooth transmission distance is less than 4 meters *(13 ft)*	An obstacle in the direct line of sight between the M 300 and the RD 18 may reduce the transmission distance of Bluetooth connections down to 2 meters *(6.6 ft)* (particularly with obstacles in the very proximity of one of the instruments).	Remove the obstacle if possible. Operate the drive unit from such a position that you can see the front side of the MarSurf M 300.
	A relatively strong WLAN transmitter or another strong transmitter using the 2.4 GHz frequency band is located in the very proximity of the M 300 or the RD 18.	Remove the transmitter if possible.
ACK not received!	The M 300 is attempting to set up a Bluetooth connection with an RD 18 and cannot establish a connection. This can happen sometimes, for example, if the RD 18 is not yet switched on or if it was switched on after the M 300.	Switch on first the RD 18 and then the M 300 and wait until the M 300 has established the connection (sometimes this requires several attempts so that the message is displayed repeatedly).
Battery discharged!	The battery is empty.	Charge the battery (approx. 7 hours is required to charge the battery to full capacity). When the instrument is switched on, more time is required for charging.
Bitmap error: -1	Invalid file name.	Select a valid file name.
Bitmap error: -2	The file could not be opened.	Select a different file.
Bitmap error: -4	The file is not a bitmap.	Select a Windows bitmap.
Bitmap error: -5	The bitmap file header could not be read.	Select a different file.
Bitmap error: -6	Error in bitmap file header.	Select a different file and save it again in the M 300.
Bitmap error: -10	The bitmap file header could not be read.	Select a different file and save it again in the M 300.
Bitmap error: -11	Error in bitmap file header.	Select a different file and save it again in the M 300.
Bitmap error: -12	Error in bitmap file header.	Select a different file and save it again in the M 300.
Bitmap error: -13	Bitmap is not black and white.	Prepare a bitmap in black and white.
Bitmap error: -14	Error in bitmap file header.	Select a bitmap format that is not compressed.
Bitmap error: -16	Error in bitmap file header.	Reduce the bitmap's size.

Error / Message	Source	Remedy
Bitmap error: -20	RGBQUAD could not be read.	Prepare a bitmap in black and white.
Bitmap error: -21	Not enough available space for bitmap.	Reduce the bitmap's size.
Bitmap error: -22	The pixel map could not be read.	Prepare a new bitmap.
Bitmap error: -23	The bitmap is too wide and cannot be loaded.	Reduce the bitmap width to max. 159 pixels.
Bitmap error: -24	The bitmap is too tall and cannot be loaded.	Reduce the bitmap height to max. 100 pixels.
Data loss	When switching on the instrument, the instrument settings were found to have been lost.	Select new instrument settings.
Printer error	No paper.	Load a paper roll.
	The printer head is overheated.	Switch off the instrument for approx. 10 minutes.
	The printer is defective.	When this appears repeatedly: send the instrument in for repair.
Settings blocked!	The instrument settings cannot be modified because blocking has been switched on.	To modify the settings, switch off the blocking in the "Basic settings" menu.
Result memory full!	The USB memory is full and cannot accept further results files.	Transfer the saved results files to a computer via the USB interface and delete the results files from the USB memory.
Maintenance necessary!	The maintenance interval has passed.	Contact Mahr service to maintain the instrument. If no maintenance is required, this message and the symbol can be switched off (see Section 9).
No data received from RD18!	There is no connection to a MarSurf RD 18 drive unit.	Create a Bluetooth or cable connection between the MarSurf M 300 and the RD 18.
Drive unit not connected!	There is no connection to a MarSurf RD 18 drive unit.	Create a Bluetooth or cable connection between the MarSurf M 300 and the RD 18.

Error / Message	Source	Remedy
Correction value > ±15	Calculated pick-up correction value lies outside the tolerance of ±15%.	• Check the measuring setup. • Check the pick-up. • Check that stylus tip is perpendicular. • Check the *Rz* nominal value or *Ra* nominal value. • Repeat calibration by pressing **START**. • If necessary, send in the pick-up for inspection.
Start measurement?	Desired function (e. g. display "Result" view, print record, save profile) cannot be carried out because no valid measurement has been taken (e. g. because the measuring conditions were modified after the last measurement).	Start measurement.
Upper limit exceeded!	Upper limit of the measuring range has been exceeded; measurement has been aborted; no evaluation possible.	Realign the testpiece or drive unit as appropriate.
Memory error or System error	Internal malfunction.	• Switch the instrument off and back on again. • Move the reset switch *(12)* to the left into the "0" position, then back to the right again. Switch the instrument on again and select the instrument settings again. • If the system error re-occurs: Send in the instrument for repair, enclosing a description of the preceding operating steps.
Connect AC adapter!	The M 300 battery is empty.	Connect the AC adapter to the M 300 and load the battery (approx. 7 hours are required to charge the battery to full capacity). When the instrument is switched on, more time is required for charging.
Connect AC adapter to RD18!	The RD 18 battery is empty.	Connect the AC adapter to the RD 18 and load the battery (approx. 1 hour is required to charge the battery to full capacity). When the instrument is switched on, more time is required for charging.

Error / Message	Source	Remedy
Pick-up needs to be calibrated!	The pick-up to be used is not calibrated.	Calibrate the pick-up.
Lower limit exceeded!	Lower limit of the measuring range has been exceeded; measurement has been aborted; no evaluation possible.	Realign the testpiece or drive unit as appropriate.
Drive unit error	The feed drive of the drive unit is defective.	When this appears repeatedly: send the instrument in for repair.
Timeout reached!	The M 300 is attempting to set up a Bluetooth connection with an RD 18 or is searching for all existing drive units and cannot establish a connection. This can happen sometimes if the M 300 was switched off without switching the RD 18 off, for example.	Switch off both devices. Move the reset switches *(12)* and *(29)* to the left into the "0" position, then back to the right again. Switch on first the RD 18 and then the M 300.

8 Interfaces

8.1 Connecting the MarSurf M 300 to a Computer (USB Interface)

The MarSurf M 300's USB interface allows it to be connected directly to a computer. It is automatically recognized as a USB memory stick by Windows 2000 and above.

This allows measuring results and profiles to be transferred to the computer for evaluation, e. g. with the evaluation software MarSurf XR 20 or XP 20.

The "MarSurf PS1 / M 300 Explorer" software (see Section 10) enables records of the profiles and measuring results to be saved and printed.

To connect the MarSurf M 300 to a computer:

1. Switch on the MarSurf M 300 with the green **START** key.
2. Connect the USB cable (3018921) to the interface *(11)* of the MarSurf M 300 with the mini-USB plug and to the computer with the normal USB plug.

Steps 3 and 4 are not required when using "MarSurf PS1 / M 300 Explorer" software.

3. In Windows Explorer, switch to the new "MarSurfM300" drive.

   If the computer using Windows XP did not assign MarSurf M 300 a drive:
   - In Windows Explorer, right-click on "My computer" and select "Manage" in the menu that appears.
   - Click on "Disk management" in the left window of Computer Management.
   - Right-click on the desired removable medium ( ) in the right window and select "Change drive letter and paths…".
   - Click on **Add…**.
   - Select the option "Assign the following drive letter", then select an available drive letter that will **never** be used for a network drive.
   - Confirm twice with **OK** and close Computer Management.
4. Copy or cut the required profiles from the "PROFILE" folder and the required results files from the "RESULT" folder.

   To prevent possible data loss, the MarSurf M 300 must be removed from the computer using the "Safely remove hardware" function.
5. Click the "Safely remove hardware" icon in the bottom right-hand corner of the Windows taskbar's information area.
6. Select e. g. "Safely remove USB Mass Storage Device – Drive (E:)".
7. Wait until the "Safe to remove hardware" message appears and disconnect the instrument from the USB interface.

8.2 Remote Control via the MarConnect Interface

The MarSurf M 300 has a MarConnect interface (RS232). This interface can be used to start the instrument remotely.

The transfer parameters specified for the MarConnect interface are as follows:
4800 baud transfer rate, even parity, 1 start bit, 7 data bits, 1 stop bit.

These transfer parameters must also be selected in the communicated device.

9 Maintenance, Cleaning and Transport

If the symbol is displayed in the top status bar, the maintenance interval has passed. Mahr after-sales service must perform maintenance on the instrument.

The following maintenance work is to be carried out for the MarSurf M 300:

- Checking the integrated standard
  - at regular intervals,
    by the user (see Section 9.1),
  - after approx. 350 calibration procedures,
    by Mahr after-sales service.

  Because the integrated standard is subject to wear during calibration, the user should check it at regular intervals using a skidless pick-up.
  After approx. 350 calibration procedures, it must be checked by Mahr after-sales service and if necessary, replaced. If calibration is performed daily, the service life is one year.
- Replacing the battery
  - after approx. 2 to 3 years,
    by the user (see Section 9.2).

The MarSurf M 300 and the pick-up are balanced at the factory and do not need to be adjusted.
We nevertheless recommend having the measuring accuracy checked at regular intervals or if there is any suspicion that the measured values are incorrect. This is done by calibrating with the integrated standard or with a separate roughness or geometric standard (see Section 6).

All components in the MarSurf M 300 set must be protected from long exposure to solar radiation, high humidity and dust!

High temperatures can shorten the service life of electronic devices, damage batteries and deform or melt certain plastics or synthetic materials.

The instruments may not be stored in cold environments. Returning them to an environment with a normal ambient temperature, can cause moisture to form internally and damage electronic switches.

Do not touch the stylus tip. Protect it from impacts.
Do not allow grease, oil or other liquids to get into the pick-up.

The MarSurf M 300 and the RD 18 should be protected as much as possible from coming into contact with oils, lubricants or coolants because they can impact the function of the keypad and the **START** key.

Cleaning

- As needed, clean the MarSurf M 300 and the RD 18 with a soft, lint-free cloth slightly moistened with water or a usual cleaning agent for plastics.
- Clean the pick-up with a soft fine-hair brush if necessary.

When cleaning, do not allow any liquids to enter the instrument!
Do not use cleaners containing plastic-dissolving chemicals (in particular acetone) or alkaline cleaners (lyes).

Storage

When the MarSurf M 300 and accessories are not in use, it is recommended that they be stored in their transport case.

Do not subject the power cable for the AC adapter to kinks or tension.

Protect the thermal paper from intense light radiation and heat (approx. 80 °C / *176 °F*).
For archiving purposes do not use clear plastic sleeves or adhesives that contain solvents.

Transport / shipment

The drive unit must be moved to the safe parking position for shipment. Furthermore the MarSurf M 300 and the RD 18 must be switched off completely (disconnected from power) (see Section 3.2).

The MarSurf M 300 and accessories may only be shipped in their transport case and packaged appropriately.
The pick-up must be packed in its storage box!
Failure to do so will render the warranty null and void.

Checking maintenance data

1. Use the **MENU** key to select the main menu.
2. Open the "Maintenance" menu by pressing the key. Without entering the code number, press the **START** key.

   The functions of the "Maintenance" menu can only be accessed by Mahr after-sales service after the service code number is entered.

   "Last m.": Date of the most recent maintenance.
   "Next m.": Date for the next maintenance.
   "Interval": Time period between maintenance events.

3. To print the maintenance record:
   - Press the **PRINT** key.
   - In the "Print" menu select the "Previous view" button by pressing the key.
     The maintenance record is printed *(see Table 6)*.

If no maintenance by Mahr after-sales service is required, the symbol can be switched off. To do this, deactivate the "Maintenance" check box.

Maintenance record	Meaning
MarSurf M 300	Instrument designation
V1.06-03	Version number
BT Id: M01103	Instrument serial number (Bluetooth master name)
30.06.2008 15:59	Date and time of printing
Mahr GmbH Carl-Mahr-Str. 1 D-37073 Göttingen, Germany Tel. 0551 70730	Four lines of company head from the "Record" menu
27.06.2008 / 365	Date of most recent maintenance / Maintenance interval in days
27.06.2009 !	Date of next maintenance ("!" if the maintenance interval has passed)
#M: 1234	Number of measurements since the last maintenance
---	If necessary, identification number of the relevant component group
---	If necessary, identifier of the most recent service event
#M: 68475	Total number of measurements
#T: 72:18:51	Instrument operation period in "Days:Hours:Minutes"
#A-T: 0:06:19	Charging time in "Days:Hours:Minutes" (instrument connected to mains and switched on)
#A-C: 95	Number of battery loading cycles

Tab. 6
Example of a maintenance record

9.1 Checking the Integrated Standard of the RD 18

To determine the *Rz* value of the integrated standard:

1. Position a suitable surface texture measuring instrument (e. g. Perthometer S2, drive unit PZK, skidless pick-up MFW) such that the pick-up is positioned on the integrated standard and a traversing length of 5.6 mm can be measured *(see Fig. 15)*.
2. Set traversing length *Lt* = 5.6 mm *(0.224 in)* on the measuring instrument.
3. Perform one or several measurements and read off the measured *Rz* value in each case.
4. Average over the measured *Rz* values.
5. Enter the calculated *Rz* value in the MarSurf M 300 as the nominal value (see Section 6.2) and cancel the calibration with the button.

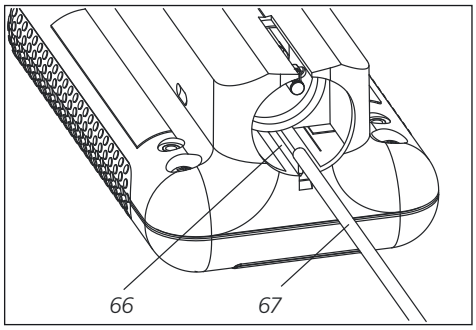

Fig. 15
Checking the integrated standard

66 Integrated standard
67 Separate skidless pick-up

9.2 Replacing the Battery

The maximum capacity of the built-in battery gradually decreases over a long period of use. Consequently, it is a good idea to replace the battery after around two to three years.

The battery should only be replaced by trained specialist staff.

For the MarSurf M 300 only a Ni-MH battery set with 5 × 1,2 V / 4200 4,200mAh (7042076) may be used for the MarSurf RD 18 a Li-Ion battery with 3.6 V / 700 mAh (3018466) must be used.
Otherwise the instruments may be destroyed.

To replace the MarSurf M 300 battery:

1. Position the MarSurf M 300 with its bottom side up.
2. Move the reset switch *(12)* to the left into the "0" position to disconnect the MarSurf M 300 completely from power.
3. Use a Phillips screwdriver (e. g. PH 1×80) to loosen and remove the two screws on the battery compartment *(15)*, then remove the battery compartment cover.
4. Carefully pry the battery set out of the battery compartment with a small screw driver or something similar.
5. Simultaneously unclick the plug from its locked position and disconnect it.
6. Insert the plug of the new battery set into the M 300 until it clicks into place in the locked position.
7. Position the new battery set (7042076) in the battery compartment. Place the cable such that it will not be improperly jammed in.

8. Replace the battery compartment cover.

   The two screws are self-tapping screws. If too much torque is used to tighten them, the housing can be destroyed!

9. Replace the two screws and tighten them with a **maximum torque of 1 Nm**.

10. Move the reset switch *(12)* back to the right into the "I" position.

11. The MarSurf M 300 settings are retained when the battery is replaced. Nevertheless, they should be checked.

12. In the "Basic settings" menu **switch off the timeout**.

13. Now **use the instrument without charging it**, until the message "Connect AC adapter!" appears.
    After approx. 30 seconds, the instrument will automatically turn itself off.

14. Connect the AC adapter to the "9 V ⎓" socket *(13)* on the back side of the MarSurf M 300 and plug it into the mains socket.

15. Then charge the MarSurf M 300 for approx. 7 hours **without printing**. When the instrument is switched on, more time is required for charging.
    Afterward, the timeout can be switched on again.

To replace the MarSurf RD 18 battery:

1. Move the reset switch *(29)* to the left into the "0" position to disconnect the MarSurf RD 18 completely from power.

2. Use a Phillips screwdriver (e. g. PH 2×100) to loosen and remove the four screws on the bottom side of the MarSurf 18.

3. Set the MarSurf RD 18 on its vee-block bottom.

4. Carefully remove the top side of the MarSurf RD 18.

5. Carefully pry the battery out of the battery compartment *(68)* with a small screw driver or something similar.

6. Click the new battery *(69)* (3018466) into place between the spring contacts. **Make sure the polarity is correct. The notch around the battery's circumference indicates its positive pole** *(see Fig. 16)*.

7. Carefully replace the top section of the MarSurf RD 18.
   Make sure that the side handle strips and the cover over the connections are in the right position.

   The four screws are self-tapping screws and can badly damage the housing if screwed in too tightly!

8. Replace the four screws and tighten them with a **maximum torque of 1 Nm**.

9. Move the reset switch *(29)* back to the right into the "I" position.

10. Connect the AC adapter to the "9 V ⎓" socket *(30)* on the back side of the MarSurf RD 18 and plug it into the mains socket.

11. Charge the MarSurf RD 18 for approx. 1 hour.

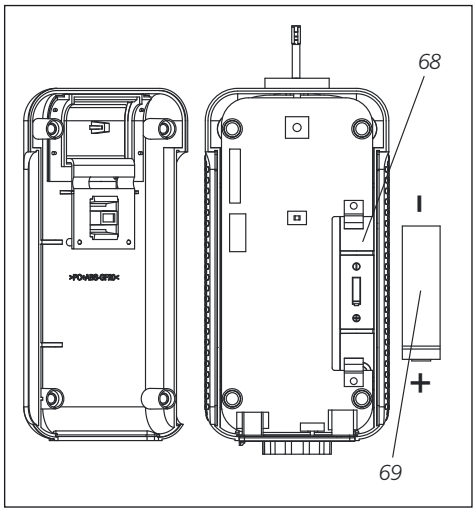

Fig. 16
Replacing the battery for MarSurf RD 18

68 Battery compartment indicating battery polarity
69 Battery (notch around the circumference indicates the positive pole)

9.3 Installing a Software Update

When updating the software, all of the MarSurf M 300 settings [33] are reset to the factory setting and all of the profile and results files in the USB memory are deleted.
If necessary, connect the MarSurf M 300 to a computer before the update and save the data.

To install a new software version:

1. Switch on the MarSurf M 300 with the green **START** key.
2. Then (when the MarSurf M 300 display goes dark for a moment) press the **6** key.

   After approx. 5 seconds the existing versions and the following instruction are displayed:

Connect USB cable now!

3. Connect the USB cable (3018921) to the interface ⚲ *(11)* of the MarSurf M 300 with the mini-USB plug and to the computer with the normal USB plug.

   On the computer, a new window opens with the new drive "MarSurfM300".

4. On the M 300 the following instruction is displayed:

Copy new file M300MAIN.TXT now! Hit key when ready!

5. Copy the "M300MAIN.TXT" file of the new software version from the computer to the "MarSurfM300" drive.
6. Press any key on the M 300.

   The file and the version number of the new software version will be displayed, e. g.:

A:M300MAIN.TXT file found! New software version: V1.06-03

   If this is not the desired software version, cancel the procedure with the **MENU** key.

   Now the M 300 will copy the file code into the internal memory.. The procedure will last approx. 5 minutes. During the procedure, progress will be displayed, e. g.:

Programming Sector: 13

7. The USB cable can be disconnected as soon as the "MarSurfM300" window closes on the computer.

33 The calibration data, the maintenance information and the battery status are retained.

8. After the software has been successfully updated, the M 300 displays the following text:

CHECK SUM OK HIT KEY TO CONTINUE

If the check sum is not "OK", the software update must be repeated in its entirety.

9. Press any key on the M 300.
   The M 300 displays the text "INIT RAM" and then turns itself off.

10. To switch off the M 300 completely (disconnect it from power), move the reset switch *(12)* to the left into the "0" position, then back to the right again into the "I" position. Afterwards, if necessary, connect the AC adapter.

11. After approx. 1 minute, switch the M 300 on again.

12. Re-enter the settings for the M 300.

10 Scope of Delivery

6910401	**MarSurf M 300 set**
6910402	Surface texture measuring instrument MarSurf M 300 (15 languages, switchable)
6910403	Drive unit MarSurf RD 18 with integrated standard incl. Mahr calibration certificate
6111520	PHT 6-350 pick-up, single-skid pick-up, meas. range 350 µm *(0.014 in)*, for measurements on level surfaces, in bores of dia. ≥ 6 mm *(0.236 in)* up to 17 mm *(0.669 in)* deep and for groove widths ≥ 3 mm *(0.118 in)*
7028532	Pick-up protection for bores of dia. ≥ 10 mm *(0.394 in)*
7028530	Pick-up protection with vee-block bottom, for measurements of cylindrical testpieces
6910203	End face vee-block for measurements on flat faces of planar and cylindrical components
6910202	Height adjustment accessory up to a max. of 50 mm *(1.969 in)* (incl. mount and 1 pair of bow-type vertical adjusters)
3025388	Long-range AC adapter (100 V AC to 240 V AC ±10 %, 9 V DC) with three mains adapters
3903456	Hex head screwdriver, 2.0 A/F
3018921	USB cable, length 1.5 m *(4.92 ft)*, for connecting the MarSurf M 300 to the USB interface of a PC
3025377	Cable, length 1.8 m *(5.91 ft)*, for connecting the MarSurf RD 18 to the M 300
3757325 3757326	Operating instructions (15 languages)
5450105	Thermal paper (1 roll)
3025723	Shoulder belt with buckle
3025896	Transport case

11 Accessories, Spare Parts and Wear Parts

Certain accessories are available as sets but the relevant parts can also be ordered individually.

6910213 PHT pick-up set for MarSurf PS1 / M 300

6111521 PHT 3-350 pick-up, single-skid pick-up, meas. range 350 µm *(0.014 in)*, for measurements in bores of dia. ≥ 3 mm *(0.118 in)* and up to 17 mm *(0.669 in)* deep

6111524 PHT 11-100 pick-up, single-skid pick-up, cranked, meas. range 100 µm *(0.004 in)*, for measurements in deep measuring positions, e. g. in grooves ≥ 2.5 mm *(0.10 in)* wide up to 7.5 mm *(0.30 in)* deep

6910212 MarSurf PS1 / M 300 accessory set

6850540 Pick-up extension, length 80 mm *(3.15 in)*, for measurements in bores of dia. ≥ 9 mm *(0.354 in)* (with PHT 3-350 pick-up)

6850541 Adapter for transverse tracing

6910203 End face vee-block for measurements on flat faces of planar and cylindrical components

6910201 Mount for affixing the MarSurf RD 18 on measuring stand ST-D, ST-F or ST-G

Further accessories available individually:

6111520 PHT 6-350 pick-up, single-skid pick-up, meas. range 350 µm *(0.014 in)*, for measurements on level surfaces, in bores of dia. ≥ 6 mm *(0.236 in)* up to 17 mm *(0.669 in)* deep and for groove widths ≥ 3 mm *(0.118 in)*

6111526 PHT 6-350 pick-up, single-skid pick-up, stylus tip radius 5 µm *(0.0002 in)*, meas. range 350 µm *(0.014 in)*, for measurements on level surfaces, in bores of dia. 6 mm *(0.236 in)* up to 17 mm *(0.669 in)* deep and for groove widths ≥ 3 mm *(0.118 in)*

6111522 PHTF 0.5-100 pick-up, single-skid pick-up, meas. range 100 µm *(0.004 in)*, for measurements on tooth flanks

6111525 PHTR 100 pick-up, single-skid pick-up with side skid, meas. range 100 µm *(0.004 in)*, for measurements on concave and convex surfaces

6111523 PT 150 pick-up dual-skid pick-up, meas. range 150 µm *(0.006 in)*, for measurements on metal sheets and roller surfaces as per DIN EN 10049 (SEP)

6710803 MarSurf ST-D measuring stand

6710806 MarSurf ST-F measuring stand

6710807 MarSurf ST-G measuring stand

6710529 MarSurf CT 120 XY table

6820420	Roughness standard PRN 10, surface standard for dynamic calibration; turned profile, profile depth approx. 10 µm *(393 µin)*; incl. Mahr calibration certificate
6820601	PGN 3 geometric standard, surface standard for dynamic calibration; sinusoidal groove profile, profile depth approx. 3 µm *(118 µin)*, groove spacing approx. 0.12 mm *(0.005 in)*
6910205	"MarSurf PS1 / M 300 Explorer" record software (15 languages, switchable)
7042076	Ni-MH battery set for MarSurf M 300, 5 × 1.2 V / 4,200 mAh
3018466	Li-Ion battery for MarSurf RD 18, 3.6 V / 700 mAh
5450105	Diagram paper, 12 rolls, thermal paper, external coating, Ø 40.0 mm -1.0 mm *(1.57 in -0.04 in)*, width 57.5 mm -0.5 mm *(2.26 in -0.02 in)*

Use of other paper can lead to poorer print quality.

Cable for remote start on request.

12 Warranty

The unit supplied by us has been designed and manufactured with care. It has undergone thorough testing before being delivered.

We therefore guarantee compliance with the applicable safety regulations, professional workmanship and perfect functioning.

The duration and conditions of warranty are set out in the general delivery terms of Mahr GmbH and/or in the sales contract.

The following provisions apply insofar as the general delivery terms and/or sales contract do not stipulate otherwise:
The warranty does not cover either natural wear and tear or faults resulting from improper handling, use for purposes other than those intended or non-observance of the operating instructions. In particular, the manufacturer may only be held liable for functional or safety features if all work on the unit, other than that described in the operating instructions, has been carried out exclusively by the manufacturer or by parties having the manufacturer's express authorization.

Since the pick-up is subject to natural wear which in turn is governed by the conditions of use and environment, any failure due to wear is excluded from the warranty.

Since the battery is subject to natural wear, its warranty is limited to six months.

The high accuracy of this instrument can only be guaranteed if genuine Mahr pick-ups and other Mahr accessories are used.

Mahr

CE - Konformitätserklärung

Declaration of Conformity / Déclaration de conformité / Atestado de conformidad / Dichiarazione di conformità

Wir We Nous Nosotros Noi	***Mahr GmbH*** ***Carl-Mahr-Str. 1*** ***D- 37073 Göttingen*** ***Germany***	erklären in alleiniger Verantwortung, dass das Produkt declare under our sole responsibility that the product déclarons sous notre seule responsabilité que le produit declaramos con responsabilidad exclusiva que el producto dichiariamo con la responsabilità esclusiva che il prodotto

Bezeichnung: name: / nom: / nombre: / nome:	Rauheitsmessgerät / surface analyzer
Typ: type: / type: / tipo: / tipo:	MarSurf RD 18 + MarSurf M 300, Set MarSurf M 300
ab Lieferdatum oder Serien-Nr.: from delivery date or serial number: à partir de date de livraison ou n° de série: a partir de fecha de entrega o núm. de serie: da data di consegna o numero di serie:	#1501/09
mit folgenden Normen übereinstimmt: is in conformity with the following standards: est conforme aux normes: está conforme con las normas siguientes: è conforme alle norme seguenti:	DIN EN 61010-1: 2002-08+B1/B2 DIN EN 55011: 2003-08; group 1, class B DIN EN 61000-6-2: 2006-03, level C DIN EN 61326-1: 2006-10+2008-06, class B, level C
gemäß der Richtlinie(n): following the Directive(s): conformément à la Directive: con arreglo a la Directiva: secondo alla Direttiva:	Niederspannungsrichtlinie 2006/95/EG Richtlinie Elektromagnetische Verträglichkeit 2004/108/EG

Ort u. Datum: Göttingen 29.12.09 Place and date: Lieu et date: Lugar y fecha: Luogo e data:	Unterschrift: i. A. Kochta Signature: Gerhard Kochta Signature: Firma: Firma:	Prüfbeauftragter Inspector Contrôleur en chef Ingegnere collaudatore Verificador jefe

Dokument-Id.-Nr.:
3760191

Mahr GmbH Carl-Mahr-Str. 1 D-37073 Göttingen Telefon 05 51/70 73-0 Fax 05 51/7 10 21 http://www.mahr.de	Geschäftsführer: Stephan Gais Thomas Keidel Sitz der Gesellschaft: Göttingen Registergericht HRB 2507 UST-IDNR. DE115299942	Längenmess- und Steuergeräte, Präzisions-Längenmesstechnik, Form- und Zahnradmessgeräte, optische/taktile 3D Messgeräte, Oberflächen- und Konturenmessgeräte, Spinnpumpen, Kugelführungen, Kalibrierservice (DKD)

3753402-1.1.05

CE

DECLARATION OF CONFORMITY
Directive 1999/5/EG (R&TTE)

The manufacturer: AMBER wireless GmbH
Albin-Köbis-Straße 18
51147 Köln
Tel. ++49-2203-699-1950

declares on its sole responsibility, that the following product:

Type-designation: **BlueNiceCom 4 (AMB2300)**

Intended purpose: 2,4GHz-Bluetooth™ wireless data modem
Transfer of digital messages

satisfies all the technical regulations applicable to the product within the scope of council directives 2006/95/EC, 2004/108/EC and 99/5/EC if used for its intended purpose and that the following norms, standards or documents have been applied:

EN 300 328 V1.7.1 (2006-10)
EN 301 489-1 V1.6.1 (2005-09)
EN 301 489-17 V1.2.1 (2002-08)
EN 50371 (2002)
EN 60950 (2001-12)

FCC 47 CFR Part 15C - Intentional Radiators ANSI C63.4-1992
FCC-ID R7TAMB2300
RSS210 Issue 6 (09-2005), RSS-GEN Issue 1 (09-2005)

Köln, 28.2.2008
place and date of issue

Manufacturer/Authorized representative
Ulf Knoblich

14 Index

A

AC adapter 15
Accessories 60
Alphanumeric input 17

B

Battery
- Charging 15
- Replacing with M 300 56
- Replacing with RD 18 57

Blocking 18
Bluetooth
- Creating a connection 30
- Transmission distance 48

Button (operating element) 16

C

Calibration 44, 45
Charging time 15
Check box (operating element) 17
Cleaning 54
Code number 18
Commissioning 14
- Charging the battery 15
- Loading paper 16
- Making instrument settings 16
- Operational readiness 14
- Switching off 14
- Switching on 14

Company logo 26
Connections
- of the M 300 11
- of the RD 18 13

Cutoff 20

D

Date 19
Declarations of conformity 62
Disposal 1

E

Evaluation 32

F

F1 and F2 (function keys)
- Programming 26

Folder
- BITMAP 26
- PROFILE 39
- RESULT 41

Function keys
- Programming 26

Functions 6

H

Htp list. *See* Rdc list

I

Input box (operating element) 17
Instrument settings 16
- Basic settings 17
- Function keys 26
- Measuring and evaluation conditions in accordance with ISO / ASME / JIS 19
- Measuring and evaluation conditions in accordance with MOTIF 23
- Parameters and tolerance limits 24
- Record contents 25

Interfaces 52
- MarConnect 53
- USB 52

Intersection lines
- for material ratio 22
- for peak count 22

L

List of differences in the heights for two profile bearing length ratios. *See* Material ratio list graded in %
List of profile bearing length ratios. *See* Material ratio list
Ls profile filter 20, 23

M

Maintenance 53
Checking maintenance data 54
Maintenance record 55
MarConnect interface 53
Material ratio
Reference line and intersection lines 22
Material ratio curve 32
Material ratio list 23, 34
graded in % 34
Measurement
Cancel 32
Invalid measurement 32
Perform 31
Measuring and evaluation conditions
in accordance with ISO / ASME / JIS 19
in accordance with MOTIF 23
Measuring range 30
Measuring station
Setting up the mobile measuring station. 27
Setting up the stationary measuring station. 28
Mechanical characteristics 6
Memory capacity 8

N

Number of sampling lengths 20

O

Operating conditions 7
Operating elements
of the M 300 9
of the menus 16
of the RD 18 12
Operators for MOTIF evaluation 23

P

Parameter lists 34
Parameters
in the "Result" view 32
Meaning and standards 36
Selection 24
Tolerance limits 24
Peak count
Intersection lines 22
Permitted uses 1
Pick-up correction value 45
Pick-up type 30
Pre- and post-travel 21
Print
Individual function 33
Record 33
Profile diagram 32
Profile format 39
Profile inversion 20, 23
Profiles 39
Automatic saving 39
Charging 40
Deleting 40
Manual saving 40
Profile format 39

R

Rdc list 34
Record
Company logo 26
Print 33
Select contents 25
Reference line for material ratio 22
Remote control 53
Results 40
Automatic saving 42
Deleting 43
Manual saving 41
Results file 42
Rmr list 23, 34
Rp list 35
Rz list 35

S

Safety instructions 2
Scope of delivery 59
Scrollbar (operating element) 17
Selection button (operating element) 17
Setup
    Bluetooth connection 30
    Drive unit and pick-up 29
    Mobile measuring station 27
    Stationary measuring station 28
Software update 58
Spare parts 60
Standard (ISO, ASME, JIS or MOTIF) 17
Standard of the RD 18
    Checking 56
Storage 54
Switching off 14
    Automatic switch off 18
Switching on 14

T

Time 19
Timeout 18
Tolerance limits 24
tp list. *See* Rmr list
Transport / shipment 54
Traverse 29
Traversing length
    in accordance with ISO / ASME / JIS 19
    in accordance with MOTIF 23
Troubleshooting 47

U

USB interface 52

W

Warranty 61
Wear parts 60

Z

Zone widths
    Intersection lines 24

Mahr

www.mahr.com