US 20130056051A1

(19) United States

(12) Patent Application Publication

JIN et al.

(10) Pub. No.: US 2013/0056051 A1

(43) Pub. Date: Mar. 7, 2013

(54) SOLAR CELL AND MANUFACTURING METHOD THEREOF

(75) Inventors: **Yoonsil JIN**, Changwon-si (KR); **Hyunjung PARK**, Changwon-si (KR); **Youngho CHOE**, Changwon-si (KR); **Changseo PARK**, Changwon-si (KR)

(73) Assignee: **LG ELECTRONICS INC.**, Seoul (KR)

(21) Appl. No.: **13/469,738**

(22) Filed: **May 11, 2012**

(30) **Foreign Application Priority Data**

Sep. 7, 2011 (KR) 10-2011-0090802

Publication Classification

(51) **Int. Cl.**

H01L 31/0352 (2006.01)

H01L 31/18 (2006.01)

(52) **U.S. Cl.** **136/255**; 438/87; 257/E31.032

(57) **ABSTRACT**

A solar cell is formed to have a silicon semiconductor substrate of a first conductive type; an emitter layer having a second conductive type opposite the first conductive type and formed on a first surface of the silicon semiconductor substrate; a back surface field layer having the first conductive type and formed on a second surface of the silicon semiconductor substrate opposite to the first surface; and wherein the emitter layer includes at least a first shallow doping area and the back surface field layer includes at least a second shallow doping area, and wherein a thickness of the first shallow doping area of the emitter layer is different from a thickness of the second shallow doping area of the back surface field layer.

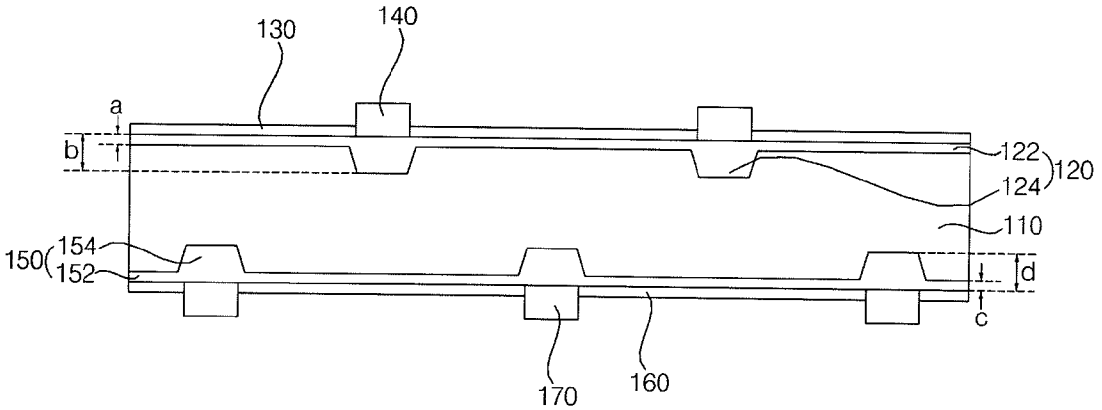

FIG. 1

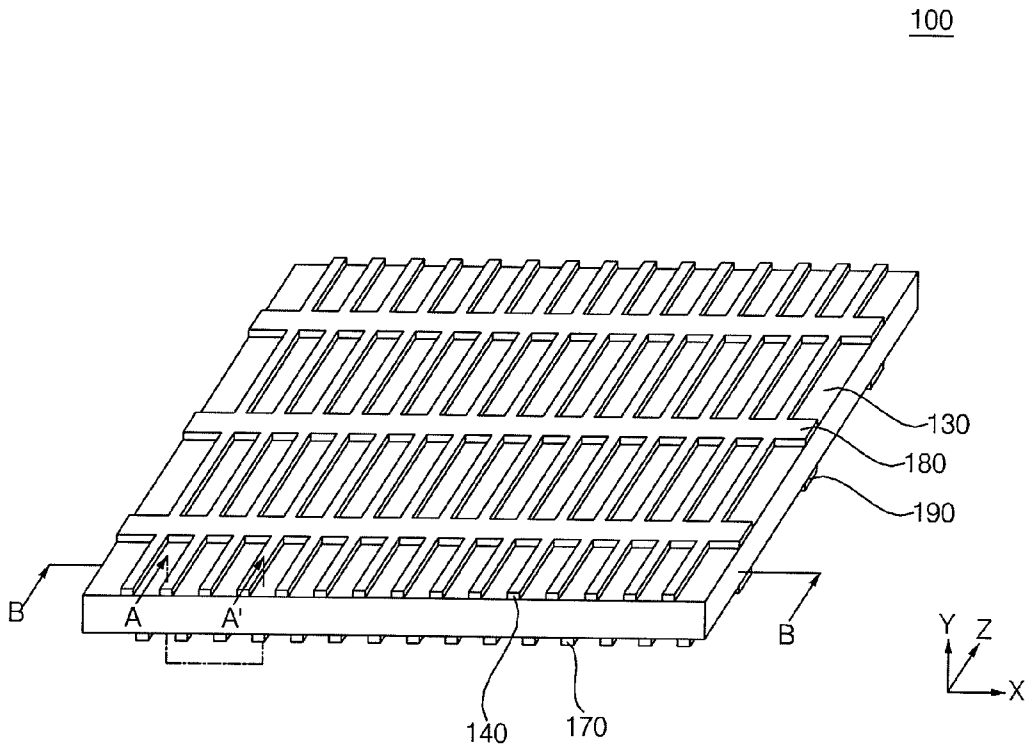
100
130
180
190
B
A
A'
B
140
170
Y
Z
X

FIG. 2

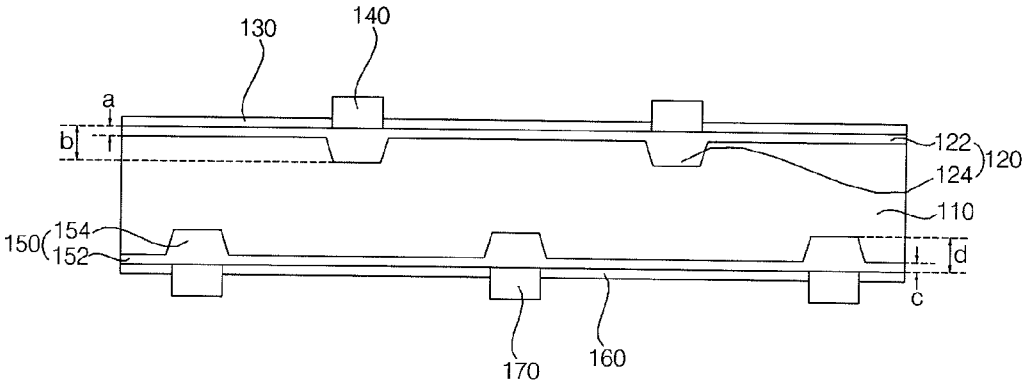
130
140
a
b
122
120
124
110
150
154
152
d
c
170
160

FIG. 3

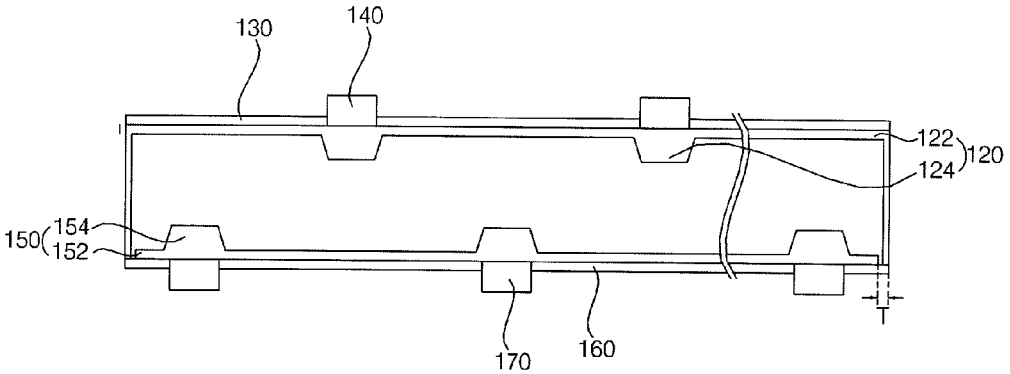
130
140
122
120
124
150
154
152
T
170
160

FIG. 4

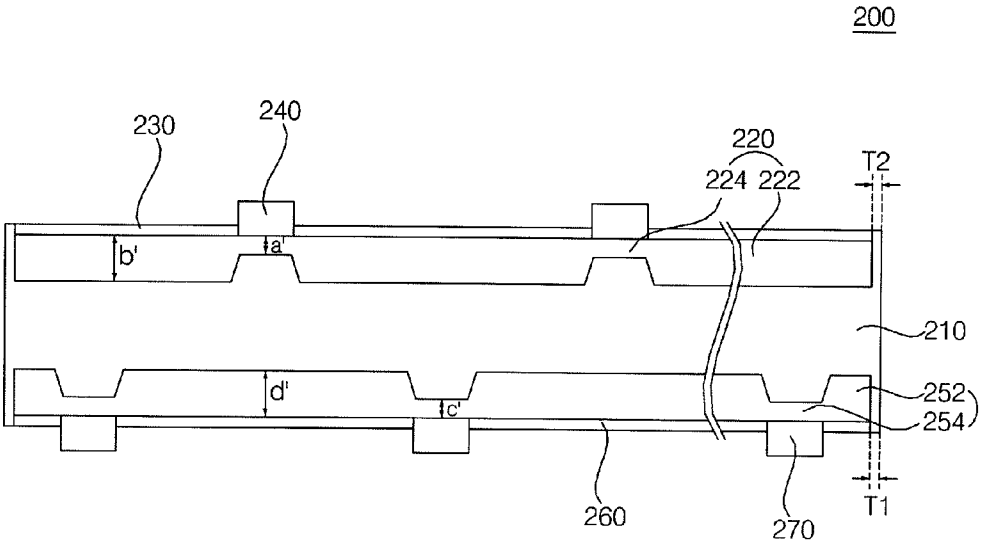
200
230
240
220
224
222
T2
b'
a'
210
d'
c'
252
254
260
270
T1

FIG. 5

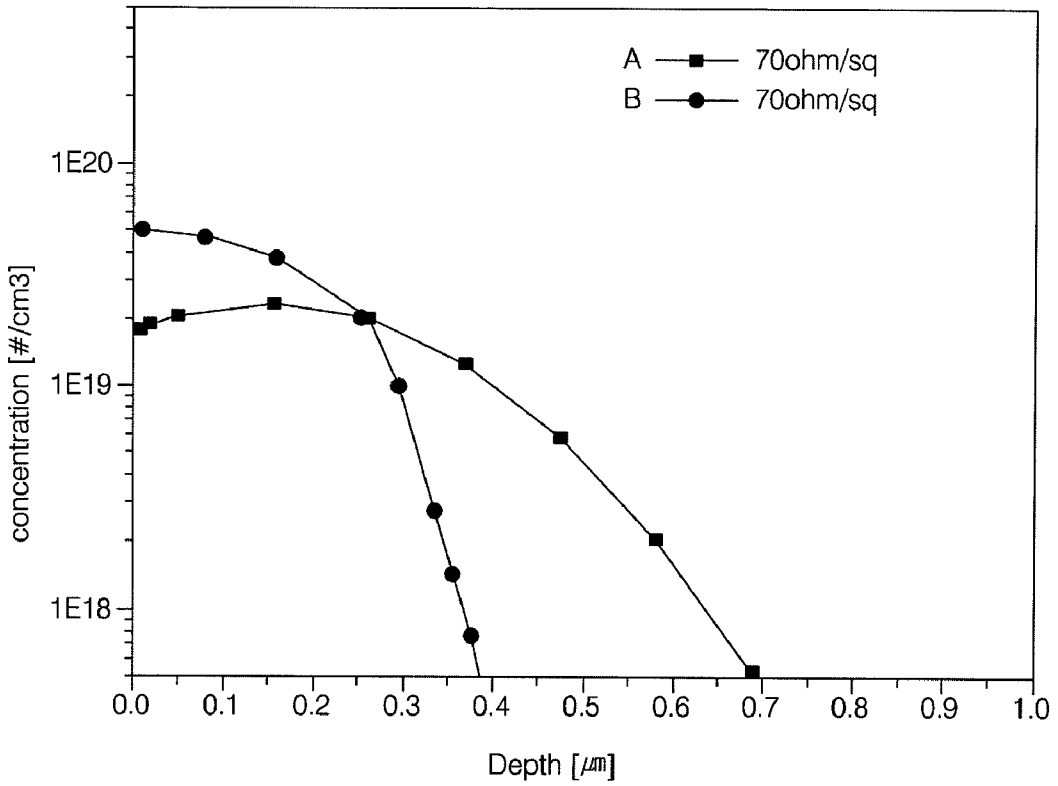
A 70ohm/sq
B 70ohm/sq
1E20
1E19
1E18
concentration [#/cm3]
0.0
0.1
0.2
0.3
0.4
0.5
0.6
0.7
0.8
0.9
1.0
Depth [μm]

Fig. 6

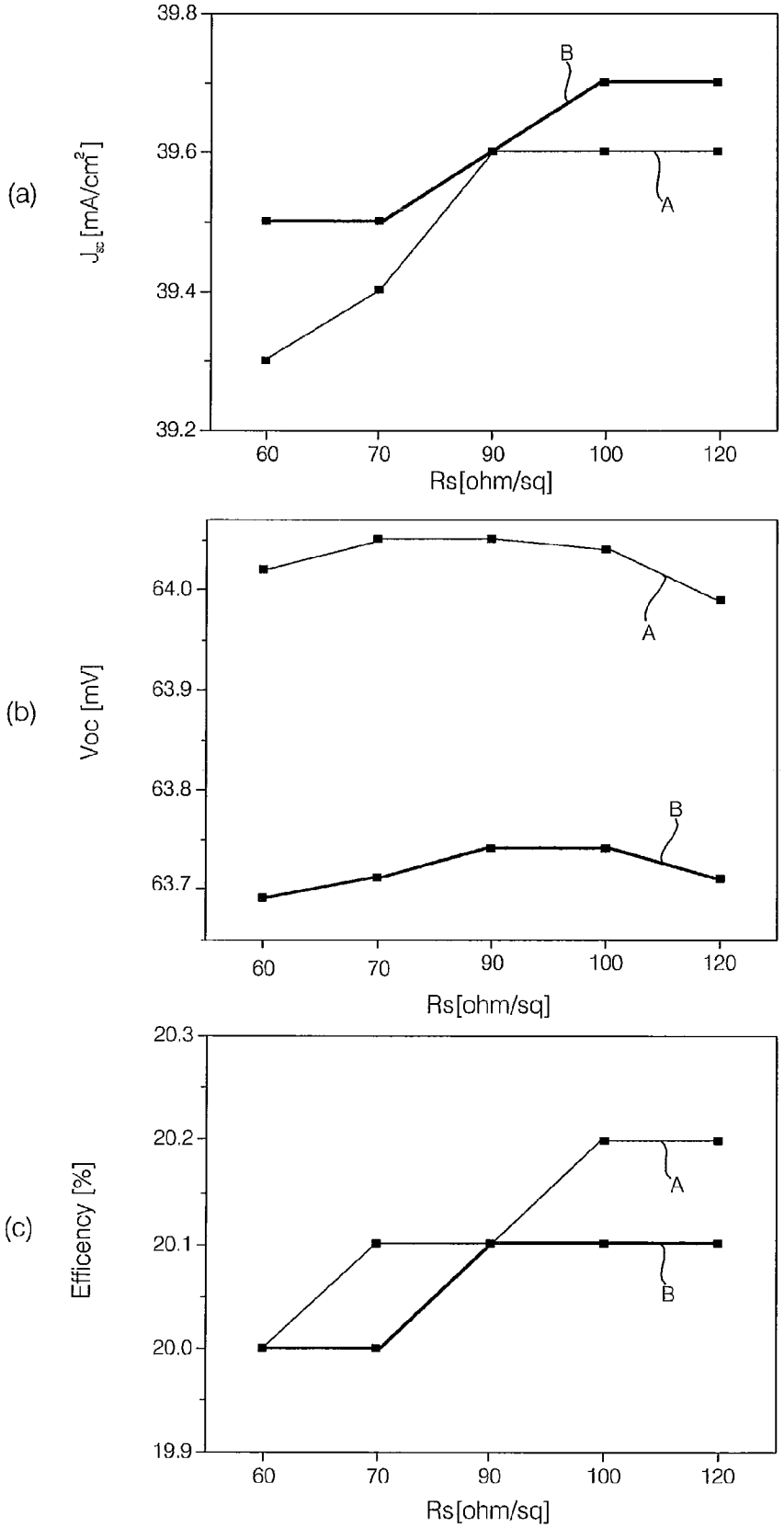
(a)
J_{sc} [mA/cm^2]
39.8
39.6
39.4
39.2
B
A
60
70
90
100
120
Rs[ohm/sq]
(b)
Voc [mV]
64.0
63.9
63.8
63.7
A
B
60
70
90
100
120
Rs[ohm/sq]
(c)
Efficency [%]
20.3
20.2
20.1
20.0
19.9
A
B
60
70
90
100
120
Rs[ohm/sq]

FIG. 7

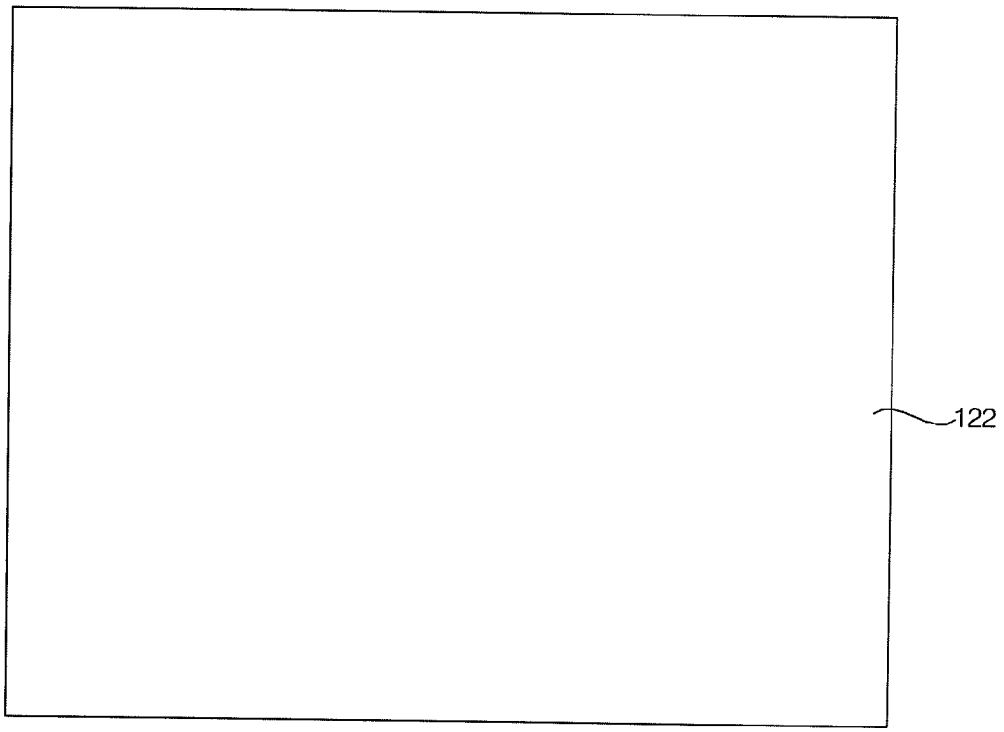

(a)

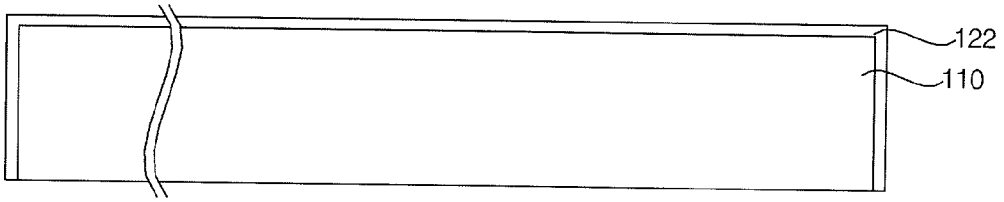

(b)

FIG. 8

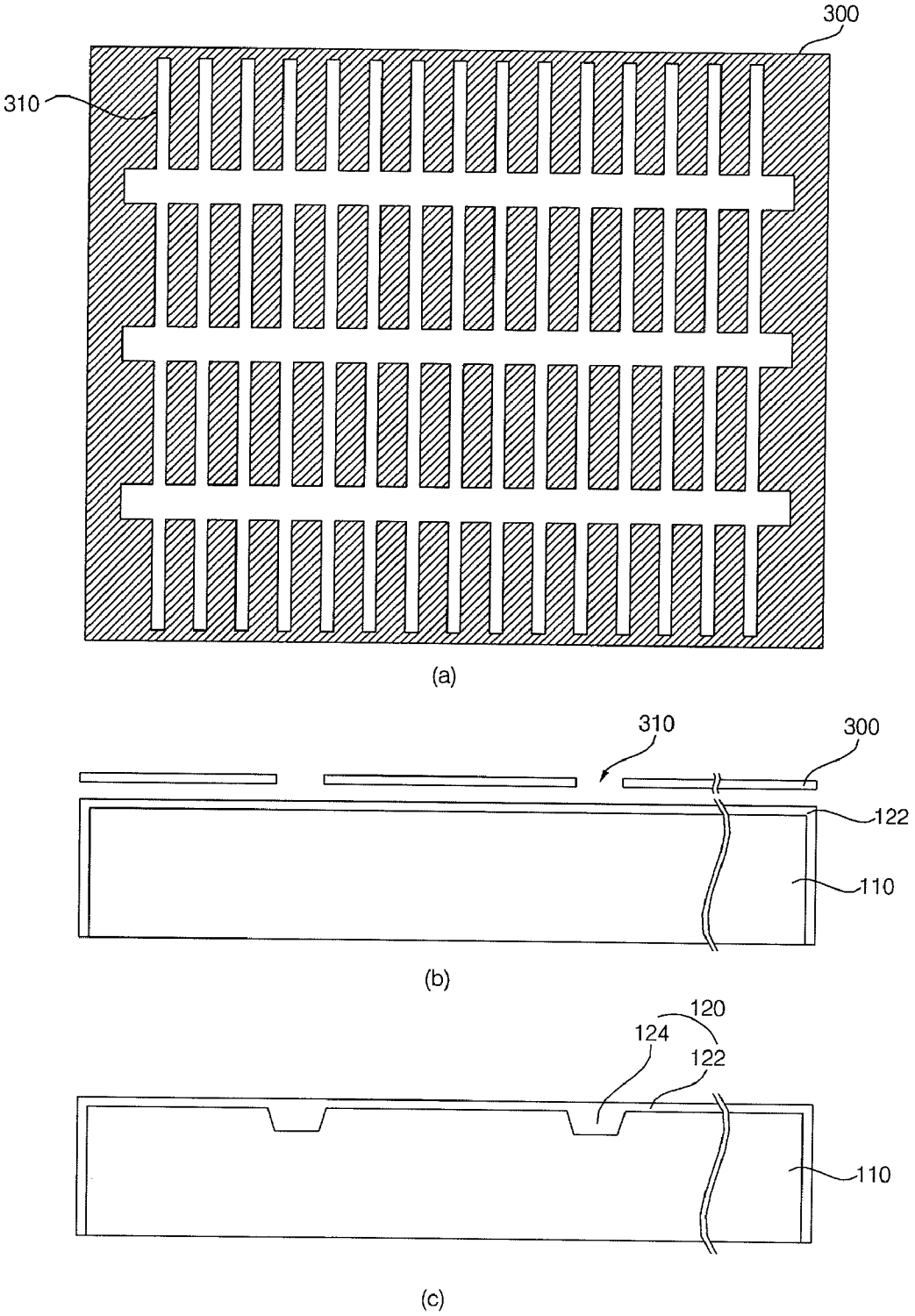

FIG. 9

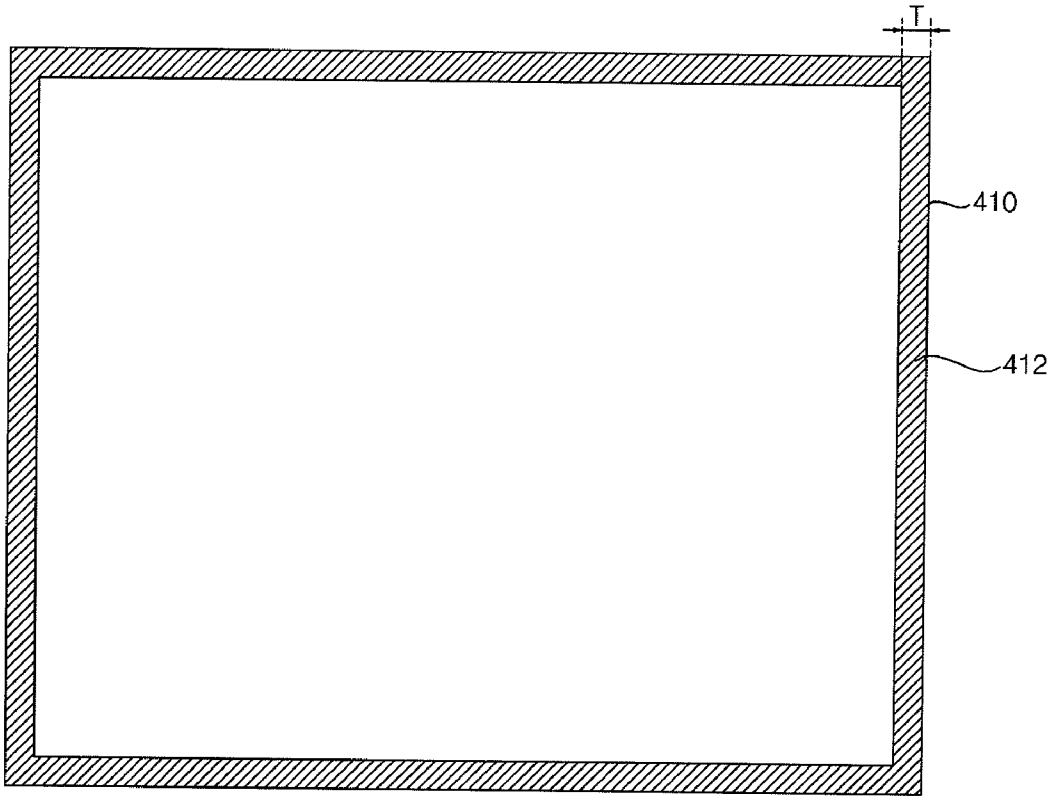

(a)

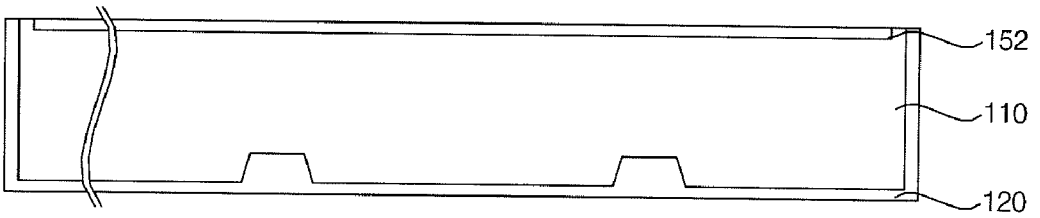

(b)

FIG. 10

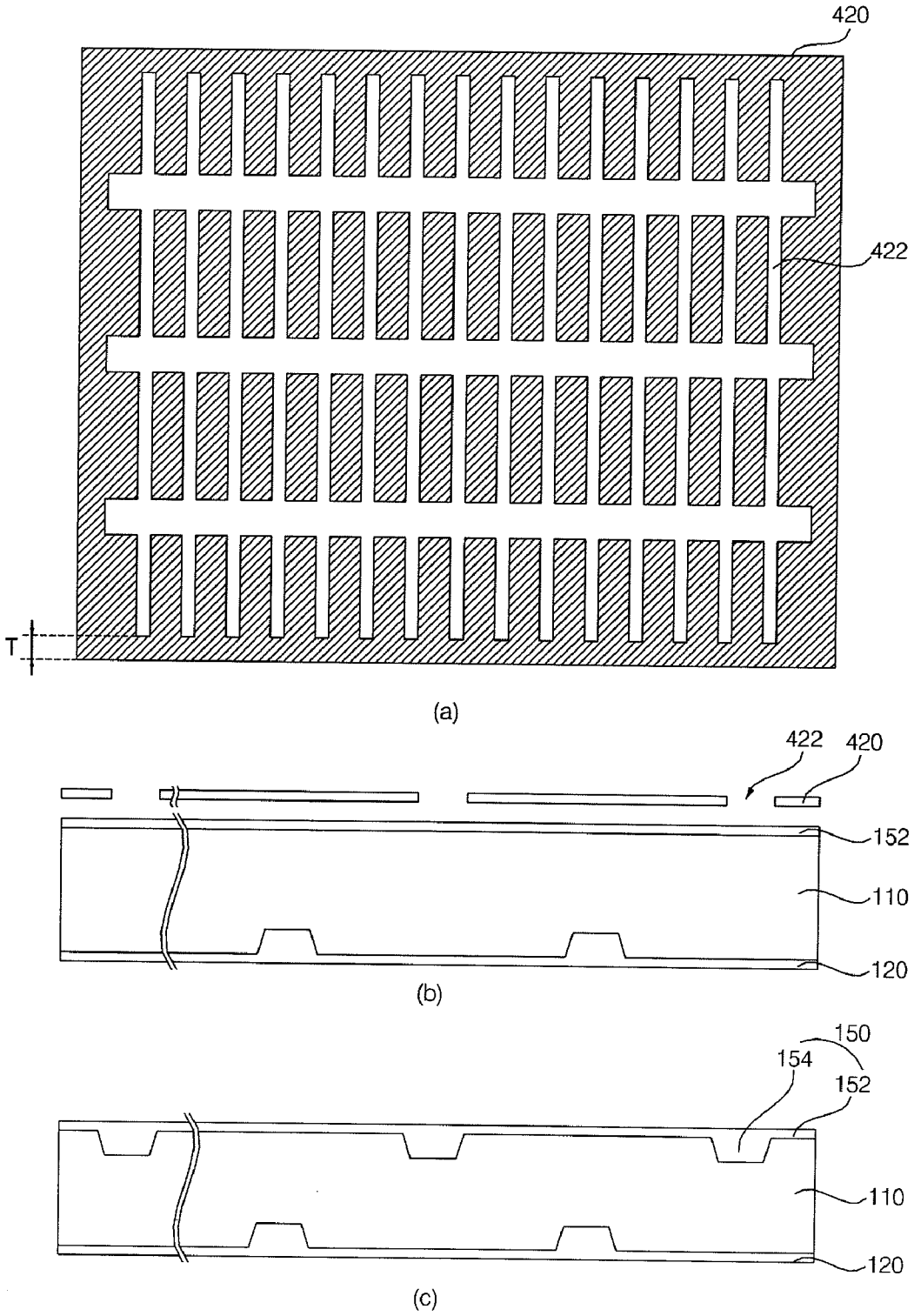

FIG. 11

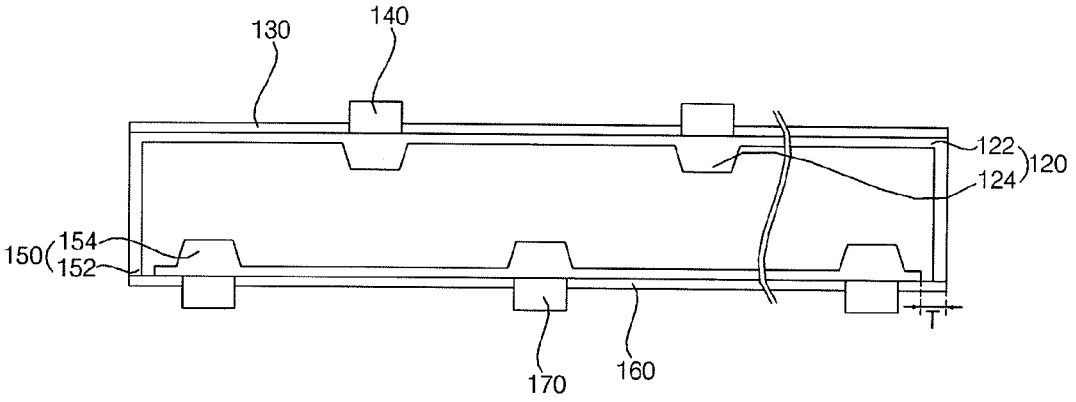

]

FIG. 12

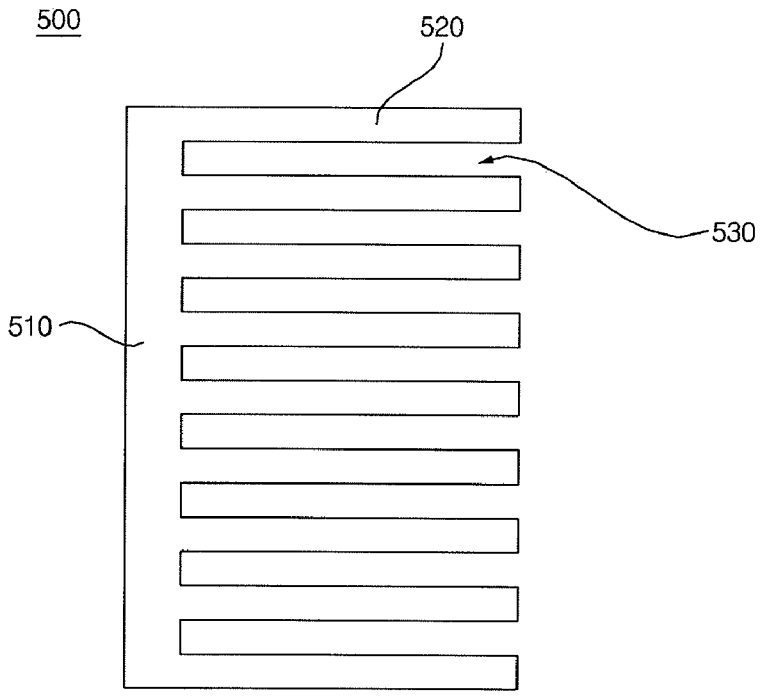

FIG. 13

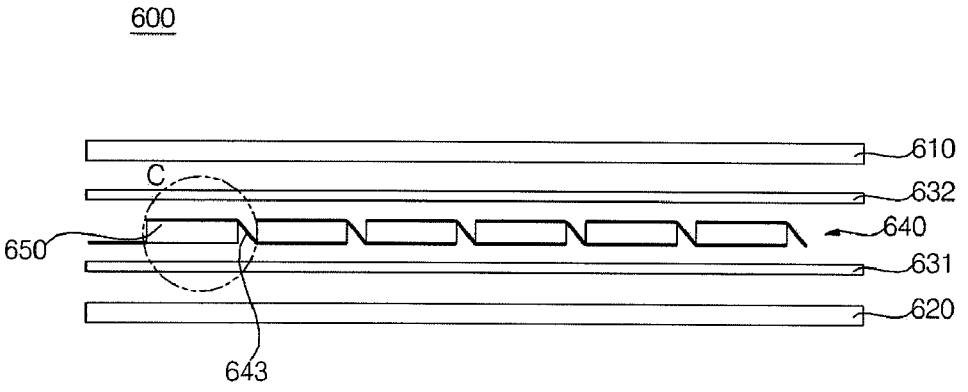

FIG. 14

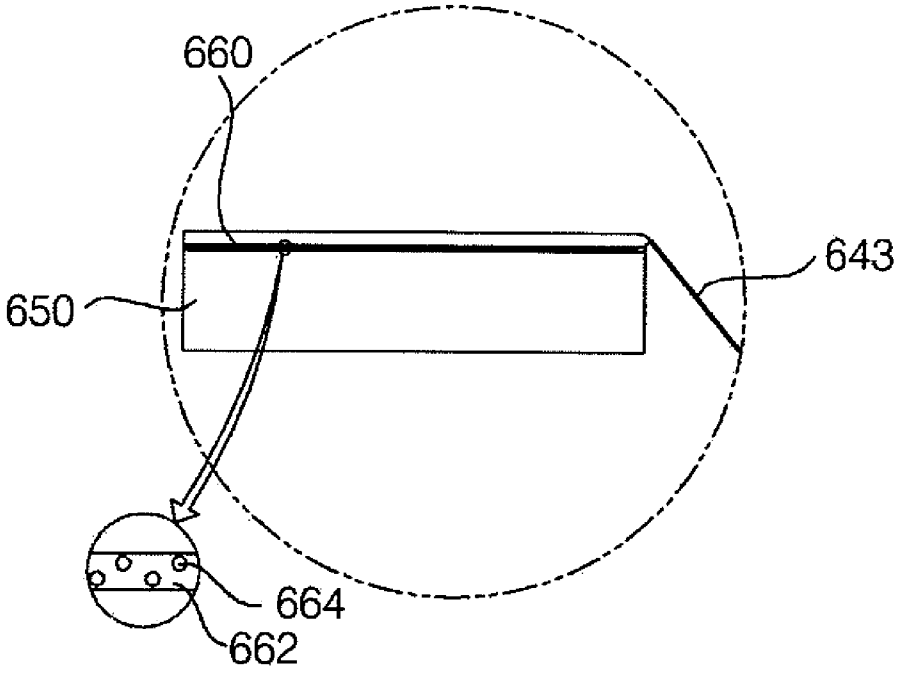

FIG. 15

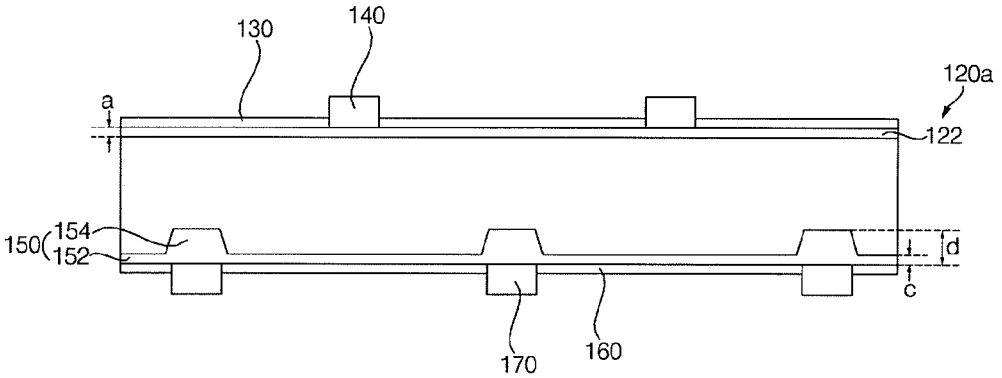

FIG. 16

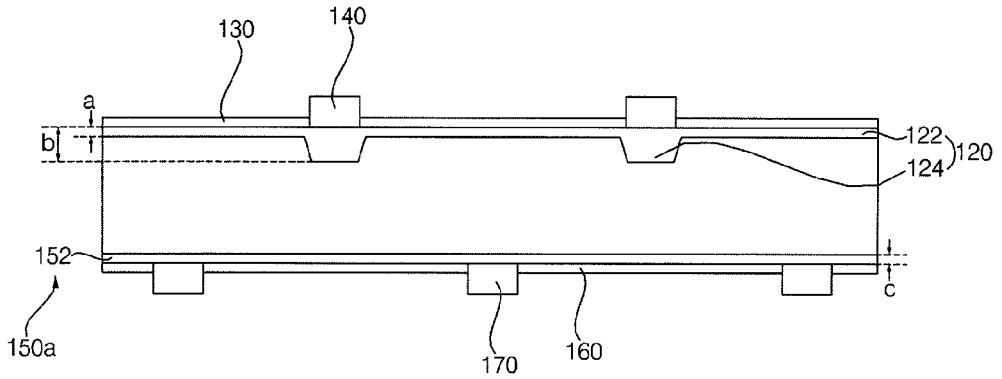

FIG. 17

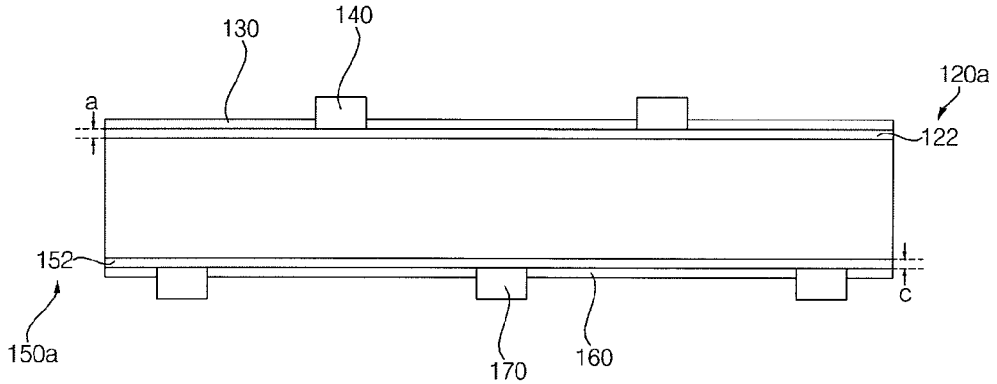

SOLAR CELL AND MANUFACTURING METHOD THEREOF

CROSS-REFERENCE TO RELATED APPLICATION

[0001] This application claims priority to and the benefit of Korean Patent Application No. 10-2011-0090802, filed on Sep. 7, 2011 in the Korean Intellectual Property Office, the disclosure of which is incorporated herein by reference.

BACKGROUND OF THE INVENTION

[0002] 1. Field of the Invention

[0003] Embodiments of the invention relate to a solar cell and a manufacturing method for the solar cell. More specifically, the embodiments of the invention relate to a solar cell, where a thickness of an emitter layer and a thickness of a back surface field layer are different from each other, and a manufacturing method for the solar cell.

[0004] 2. Description of the Related Art

[0005] As depletion of conventional energy resources such as oil or coal is anticipated, an interest for alternative energy resources is increasing in the hopes of substituting them for the conventional energy resources. Among others, solar cells are receiving particular attention from the public as a next generation device capable of converting solar energy directly into electric energy by use of semiconductors.

[0006] In other words, a solar cell is a device converting solar energy into electric energy by using a photovoltaic effect. Depending on the material employed, solar cells may be classified into a silicon solar cell, a thin-film type solar cell, a dye-sensitized solar cell, and an organic polymer-type solar cell, where silicon solar cells are most prevalent over the other types of solar cells. For the solar cells discussed above, it is very important to improve the efficiency thereof, which is related to a ratio of converting incident light rays into electric energy.

SUMMARY OF THE INVENTION

[0007] The embodiments of the invention are directed to providing a solar cell with excellent photovoltaic conversion efficiency and a manufacturing method for the solar cell.

[0008] To achieve this and other objectives, a solar cell according to one embodiment of the invention includes a silicon semiconductor substrate of a first conductive type; an emitter layer having a second conductive type opposite the first conductive type and formed on a first surface of the silicon semiconductor substrate; a back surface field layer having the first conductive type and formed on a second surface of the silicon semiconductor substrate opposite to the first surface; and wherein the emitter layer includes at least a first shallow doping area and the back surface field layer includes at least a second shallow doping area, and wherein a thickness of the first shallow doping area of the emitter layer is different from a thickness of the second shallow doping area of the back surface field layer.

[0009] Also, to achieve the objective, a manufacturing method for a solar cell according to one embodiment of the invention includes preparing a silicon semiconductor substrate of a first conductive type; forming a first impurity doped region by a first ion implantation of a first impurity having a second conductive type opposite the first conductive type on a first surface of the silicon semiconductor substrate; forming a second impurity doped region by performing a second ion implantation of a second impurity having the first conductive type on a second surface of the silicon semiconductor substrate opposite to the first surface; and performing a heat treatment to both of the first impurity doped region and the second impurity doped region to form an emitter layer and a back surface field layer, respectively, wherein the emitter layer includes at least a first shallow doping area and the back surface field layer includes at least a second shallow doping area, and wherein a thickness of the first shallow doping area of the emitter layer is different from a thickness of the second shallow doping area of the back surface field layer.

BRIEF DESCRIPTION OF THE DRAWINGS

[0010] The accompany drawings, which are included to provide a further understanding of the invention and are incorporated on and constitute a part of this specification, illustrate embodiments of the invention and together with the description serve to explain the principles of the invention.

[0011] FIG. **1** is a perspective view of a solar cell according to one embodiment of the invention;

[0012] FIG. **2** is a cross-sectional view of the solar cell of FIG. **1** along line A-A';

[0013] FIG. **3** is a cross-sectional view of the solar cell of FIG. **1** along line B-B';

[0014] FIG. **4** is a cross-sectional view of a solar cell according to another embodiment of the invention;

[0015] FIG. **5** is a doping profile of an emitter layer of the solar cell of FIG. **4**;

[0016] FIG. **6** illustrates results of measuring varying resistance of the emitter layer having a doping profile in a solar cell as shown in FIG. **5**;

[0017] FIGS. **7** to **12** are views illustrating method of manufacturing a solar cell according to one embodiment of the invention;

[0018] FIG. **13** is a cross-sectional view of a solar cell module according to one embodiment of the invention;

[0019] FIG. **14** is a magnified view of C of FIG. **13**;

[0020] FIG. **15** is a cross-sectional view of a solar cell according to another embodiment of the invention;

[0021] FIG. **16** is a cross-sectional view of a solar cell according to another embodiment of the invention; and

[0022] FIG. **17** is a cross-sectional view of a solar cell according to another embodiment of the invention.

DETAILED DESCRIPTION OF THE EMBODIMENTS

[0023] Embodiments of the invention will be described in more detail with reference to appended drawings.

[0024] Hereinafter, the drawings include reference to elements being all formed, installed, constructed "directly" or "indirectly", "on" or "under" of respective elements, and references for to elements being "on" and "under" of the respective other elements will be described based on the drawings. The respective elements are may be exaggerated, omitted, or schematically illustrated for the illustrative convenience.

[0025] FIG. **1** is a perspective view of a solar cell according to one embodiment of the invention; FIG. **2** is a cross-sectional view of the solar cell of FIG. **1** along line A-A'; FIG. **3** is a cross-sectional view of the solar cell of FIG. **1** along line B-B'. In this Instance, FIGS. **2** and **3** correspond to cross-sectional views as the solar cell of FIG. **1** is cut parallel to the X-Y plane and observed along the Z axis.

[0026] With reference to the figures, a solar cell **100** according to one embodiment of the invention includes a silicon semiconductor substrate **110** of a first conductive type; an emitter layer **120** disposed on one surface of the substrate **110**; a plurality of front finger lines (or front finger electrodes) **140** connected to the emitter layer **120**; a back surface field layer **150** on the other surface of the substrate **110**; and a plurality of rear finger lines (or rear finger electrodes) **170** connected to the back surface field layer **150**. Also, the solar cell **100** may include a first anti-reflection film **130** on the emitter layer **120** and a second anti-reflection film **160** on the back surface field layer **150**.

[0027] The substrate **110** may be made from silicon and may be formed of a first conductive type and be doped with a P or an N-type impurity. For example, silicon may be doped with an impurity of a group 3 element such as B, Ga, and In, and be implemented as a P-type, while the silicon may be doped with an impurity of group 5 element such as P, As, and Sb, and be implemented as an N-type.

[0028] The surface of the substrate **110** may have a convex-concave structure. The convex-concave structure denotes a convex-concave pattern on the surface of the substrate **110**, which is formed from texturing. If texturing is applied to the substrate **110**, as described later, the emitter layer **120**, the first anti-reflection layer **130**, the back surface field layer **150**, and the second anti-reflection layer **160** may also be formed according to the pattern of the convex-concave structure. Therefore, a reflection rate of light rays incident on the solar cell **100** is decreased and the amount of light captured is increased, whereby optical loss of the solar cell **100** is decreased.

[0029] The emitter layer **120** is formed as the substrate **110** is doped with a first impurity of a second conductive type opposite to that of the substrate **110**. For example, if the substrate **110** is a P-type, the emitter layer **120** is doped with an N-type impurity, while if the substrate **110** is an N-type, the emitter layer **120** is doped with a P-type impurity. As described above, if the substrate **110** and the emitter layer **120** are doped with opposite types of impurities to each other, a P-N junction is formed in a surface between the substrate **110** and the emitter layer **120**.

[0030] On the other hand, the emitter layer **120** may comprise a first area **124** adjoining the plurality of front finger lines **140** and a second area **122** disposed between the plurality of front finger lines **140**, namely, respective areas that are between a plurality of first areas **124**.

[0031] In general, the more impurities the emitter layer **120** contains, the more recombination electron-hole pairs are generated from contribution of the photovoltaic effect. Therefore, for the second area **122** where photons are converted to electron-hole pairs, it is advantageous to have a relatively low impurity density; and for the first area **124** where separated electrons or holes move toward the front finger lines **140**, it is more desirable to have a relatively high impurity density to reduce contact resistance.

[0032] Therefore, to reduce surface resistance against the front finger lines **140** and prevent or reduce degradation of efficiency of a solar cell **100** due to surface recombination, the solar cell **100** according to the invention may be formed such that the first area **124** adjoining the front finger lines **140** has a relatively high doping density than that of the second area **122**. Accordingly, the surface resistance of the first area **124** of the emitter layer **120** is made to be smaller than that of the second area **122**. Also, the doping thickness b of the first area **124** may be made larger than the doping thickness a of the second area **122**.

[0033] The first area **124** of the emitter layer **120** may have a doping density ranging from 1E19 to 1E21 and a doping depth (or a thickness) of 0.5 μm to 2 μm, while the second area **122** may have a doping density ranging from 5E18 to 1E20 and a doping depth (or a thickness) of 0.3 μm to 1 μm.

[0034] In this instance, the surface resistance of the first area **124** of the emitter layer **120** may be set to range from 30 to 70Ω/□, for instance 40 to 60Ω/□while the surface resistance of the second area **122** from 70 to 150Ω/□ for instance from 90 to 120 Ω/□.

[0035] The first anti-reflection film **130** reduces reflection rate of solar rays incident on the front surface of the substrate **110**. Accordingly, the amount of solar energy reaching the P-N junction is increased, thereby increasing short circuit current Isc of the solar cell **100**. The first anti-reflection film **130** may have a single film structure comprising a single film selected from a group consisting of silicon nitride, silicon oxide, silicon oxy-nitride, intrinsic amorphous silicon, MgF_2, ZnS, TiO_2 and CeO_2; or a multi-layer film structure comprising a combination of two or more of such films or materials. Other materials may be used. If the substrate **110** is a P-type, the first anti-reflection film **130** may perform a function of a passivation layer.

[0036] The first anti-reflection film **130** has a refractive index ranging from 1.8 to 2.5 and thickness of 60 to 100 μm. In particular, if the refractive index of the first anti-reflection film **130** is smaller than 1.8, the anti-reflection effect is not substantial. On the contrary, if the refractive index is larger than 2.5, among incident light rays, those wavelengths that contribute to current conversion are optically absorbed into the first anti-reflection film **130**, reducing the photovoltaic conversion efficiency of the solar cell **100**.

[0037] Meanwhile, if the substrate **110** is an N-type, a passivation layer may be further included between the emitter layer **120** and the first anti-reflection film **130**. The passivation layer may be formed from SiOx, AlxOy, and so on. Accordingly, a combined structure of passivation layer/first anti-reflection film **130** such as SiO_2/SiN_x, Al_2O_3/SiNx and so on, is possible but such is not limited to the above.

[0038] A multiple number of front finger lines **140** are formed and collect electrons or holes generated due to the photovoltaic effect. Also, the plurality of front finger lines **140** may adjoin front surface bus electrode **180** intersecting the front finger lines **140**. The front surface bus electrode **180** may provide currents generated from the solar cell **100** to the outside, by connection to a ribbon.

[0039] In the case when the emitter layer **120** is a P-type, for ohmic contact with the emitter layer **120**, the front finger lines **140** may be formed in such a way that paste comprising AgAl, glass frit, and so on is screen printed on the area for the front finger lines **140** by using a mask with openings, and then heat treatment is applied for the paste. On the other hand, if the emitter layer **120** is an N-type, paste including Ag, glass frit, and so on is screen printed and then heat treatment is applied to the paste, forming the front finger lines **140**.

[0040] Also, the front finger lines **140** may be formed by removing portions of the first anti-reflection film **130** by using laser ablation, depositing a seed layer based on Ni at the removed portions, and then depositing a metal layer by using coating or sputtering. The front finger lines **140** formed as described above may have a structure of Ni/Cu/Sn, Ni/Ag, or

Ni/Cu/Ag but are not limited to the above. Additionally, the front finger lines **140** above may be formed to have a width of 10 μm or more and a height of 60 to 80 μm, but are not limited to the above.

[0041] The back surface field layer **150** is a high density doping area, capable of preventing or reducing recombination of separated electron-hole pairs, reducing leakage currents, and making excellent ohmic contact with the rear finger lines **170**. The back surface field layer **150** may be formed using a second impurity of the first conductive type which is the same type as the substrate **110**.

[0042] Also, the back surface field layer **150** may have the same structure as the aforementioned emitter layer **120**. In other words, the back surface field layer **150** may include a third area **154** adjoining the plurality of front finger lines **170** and a fourth area **152** that are between areas among the plurality of rear finger lines **170**, namely, the respective areas that are between a plurality of third areas **154**. The doping density of impurities in the third area **154** may be larger than that of the fourth area **152**. Therefore, a solar cell **100** according to one embodiment of the invention may be a bifacial solar cell, the structure of which has a selective emitter layer **120**, and at the same time, a selective back surface field layer **150**.

[0043] Meanwhile, since the doping density of the third area **154** of the back surface field layer **150** is larger than that of the fourth area **152**, contact resistance between the third area **154** and the rear finger lines **170** is reduced, and since the fourth area **152** is formed throughout the rear surface of the substrate **110**, recombination of electrons and holes may be effectively prevented or reduced. Therefore, since loss due to recombination of electrons and holes is reduced and at the same time, transfer of electrons and holes generated by the photovoltaic effect to the rear finger lines **170** is further expedited, photovoltaic conversion efficiency of the solar cell **100** may be greatly improved.

[0044] The third area **154** of the back surface field layer **150** may have a doping density ranging from 1E19 to 1E21 and a doping depth of 0.5 nu to 2 μm, while the fourth area **152** may have a doping density ranging from 5E18 to 1E20 and a doping depth of 0.3 μm to 1 μm.

[0045] In this instance, the surface resistance of the third area **154** of the back surface field layer **150** may be set to range from 20 to 70Ω/□, for instance 40 to 60Ω/□ while the surface resistance of the fourth area **152** from 60 to 150Ω/□, for instance from 90 to 120Ω/□. Thickness of the third area **154** may be larger than that of the fourth area **152**.

[0046] Meanwhile, according to embodiments of the invention, thickness of the back surface field layer **150** may be formed differently from that of the emitter layer **120**.

[0047] First, if the substrate **110** is of an N-conductive type, for example, the back surface field layer **150** may be doped with an N-type impurity (e.g., P), while the emitter layer **120** with a P-type impurity (e.g., B). In this instance, thickness of the back surface field layer **150** may be larger than that of the emitter layer **120**. To be more specific, a doping thickness d of the third area **154** of the back surface field layer **150** is deeper (or greater) than the doping thickness b of the first area **124** of the emitter layer **120**; and doping thickness c of the fourth area **152** of the back surface field layer **150** may be formed more deeply than the doping thickness a of the second area **122** of the emitter layer **120**. Also, a width of the third area **154** of the back surface field layer **150** may be formed to be larger (or greater) than a width of the first area **124** of the emitter layer **120**.

[0048] As described above, if thicknesses of the back surface field layer **150** are formed to be larger than thicknesses of corresponding portions of the emitter layer **120**, the entire series resistance of the solar cell **100** is reduced and thus, fill factor (FF) of the solar cell **100** is increased.

[0049] On the other hand, as a different example, if the substrate **110** is of a P-conductive type, the back surface field layer **150** may be doped with a P-type impurity (e.g., B), while the emitter layer **120** is doped with an N-type impurity (e.g., P). In this instance, a thickness of the emitter layer **120** may be larger than that of the back surface field layer **150**. In this instance, a density of surface impurities of the emitter layer **120** may be reduced and a deep junction is formed easily. Therefore, an open voltage Voc of the solar cell **100** may be increased. To be more specific, the doping thickness d of the third area **154** of the back surface field layer **150** is smaller than doping thickness b of the first area **124** of the emitter layer **120**, and the doping thickness d of the fourth area **152** of the back surface field layer **150** may be formed smaller than the doping thickness a of the second area **122** of the emitter layer **120**. Also, the width of the third area **154** of the back surface field layer **150** may be formed to be smaller than the width of the first area **124** of the emitter layer **120**.

[0050] Meanwhile, a second anti-reflection film **160** is disposed on the back surface field layer **150**. The second anti-reflection film **160** may be similar to the first anti-reflection film **130** described above. In other words, the second anti-reflection film **160** has a single film structure comprising a single film selected from a group consisting of silicon nitride, silicon oxide, silicon oxy-nitride, intrinsic amorphous silicon, MgF_2, ZnS, TiO_2 and CeO_2, or a multi-layer film structure comprising a combination of two or more films. Thus, the second anti-reflection film **160** reduces reflection rate of solar rays incident on the rear surface of the substrate **110**, and if the substrate **110** is an N-type, performs the function of a passivation layer. The second anti-reflection film **160** described above has a refractive index ranging from 1.8 to 2.5 and thickness of 60 to 100 μm.

[0051] Meanwhile, if the substrate **110** is a P-type, a passivation layer may be further included between the back surface field layer **150** and the second anti-reflection film **160**. The passivation layer may be formed from SiOx, AlxOy, and so on. Accordingly, a structure of passivation layer/second anti-reflection film **160** such as SiO_2/SiNx, Al_2O_3/SiNx and so on is possible but is not limited to the above.

[0052] A multiple number of rear finger lines **170** may be formed and if the substrate **110** is an N-type, for ohmic contact with the back surface field layer **150**, the rear finger lines **170** may be formed in such a way that paste comprising Ag, glass frit, and so on is screen printed on the substrate **110**. If the substrate **110** is a P-type, the rear finger lines **170** may be formed by using paste comprising AgAl, glass frit, and so on.

[0053] Also, the rear finger lines **170** may be formed by removing of the second anti-reflection film **160** by using laser ablation, depositing a seed layer based on Ni at the removed portions, and then depositing a metal layer by using coating or sputtering. The rear finger lines **170** formed as described above may have a structure of Ni/Cu/Sn, Ni/Ag, or Ni/Cu/Ag but are not limited to the above. Additionally, the rear finger lines **170** above may be formed to have a width of 10 μm or more and a height of 60 to 80 μm, but are not limited to the above.

[0054] A plurality of rear finger lines **170** may be adjoined to a rear surface bus electrode **190** intersecting the rear finger lines **170** and provide currents generated due to the photovoltaic effect to the outside.

[0055] Meanwhile, the number of rear finger lines **170** may be different from the number of front finger lines **140**. For example, the number or the quantity of the rear finger lines **170** may be larger than that of front finger lines **140**.

[0056] If the number of the rear finger lines **170** is bigger than that of front finger lines **140**, traveling distances of electrons or holes toward the rear finger lines **170** becomes shorter, reducing the overall resistance of the solar cell **100**. In addition, since there is no need to increase the number of the front finger lines **140** to decrease the resistance, optical absorption in the front surface of the solar cell **100** is not additionally impeded and thus, reduction of optical absorption rate of the solar cell **100** may be prevented or reduced.

[0057] FIG. **3** is a cross-sectional view of the solar cell of FIG. **1** along line B-B'. FIG. **3** illustrates a situation where the back surface field layer **150** is formed separated from the edge of the rear surface of the substrate **110** by a distance or a gap 'T'. In other embodiments, the emitter layer **120** may be formed separated from the edge of the substrate **110** and both of the emitter layer **120** and the back surface field layer **150** may be formed separated from the edge of the substrate **110** by the gap 'T'. In what follows, description will be given with reference to FIG. **3**.

[0058] As shown in FIG. **3**, if the back surface electric field layer **150** is formed separated from the edge of the substrate **110**, the back surface field layer **150** and the emitter layer **120** may be kept from being shorted. In this instance as described below, an additional process of edge isolation for preventing the front and the rear surfaces of the substrate **110** from being shorted may be omitted. Also, when the substrate **110** is doped with impurities for forming the back surface field layer **150**, diffusion of the impurities up to the side surface of the solar cell **100** is prevented or reduced, to thereby suppress the occurrence of hot spots that are generated as excessive currents flow through the side surface of the solar cell **100**.

[0059] It should be noted, however that a second impurity for forming the back surface field layer **150** may come to be included within the gap T between the back surface field layer **150** and the edge of the rear surface of the substrate **110** due to diffusion. However, the amount of the second impurity in the gap T is so small that the back surface field layer **150** and the emitter layer **120** may be kept from being shorted. Accordingly, the amount of the second impurity in the gap T may be ignored.

[0060] Meanwhile, the gap (or distance) T between the back surface field layer **150** and the edge of the rear surface of the substrate **110** may range from 2 to 300 μm. If the gap (or distance) T between the back surface field layer **150** and the edge of the rear surface of the substrate **110** is shorter than 2 μm, the back surface field layer **150** and the emitter layer **120** may be shorted due to diffusion of impurities, which may be a cause for degrading the efficiency of the solar cell **100**. On other hand, if the distance T between the back surface field layer **150** and the edge of the rear surface of the substrate **110** is longer than 300 μm, a size of the back surface field layer **150** to be formed is reduced and thus, recombination of electron hole pairs is facilitated, which may degrade the efficiency of the solar cell **100**.

[0061] FIG. **4** is a cross-sectional view of a solar cell according to another embodiment of the invention; FIG. **5** is a doping profile of an emitter layer of the solar cell of FIG. **4**; and FIG. **6** illustrates results of measuring varying resistance of the emitter layer having a doping profile in a solar cell as shown in FIG. **5**.

[0062] With reference to FIG. **4**, a solar cell **200** according to another embodiment of the invention includes a silicon semiconductor substrate **210** of a first conductive type, an emitter layer **220** disposed on one surface of the substrate **210**, a plurality of front finger lines (front finger electrodes) **240** connected to the emitter layer **220**, and a plurality of rear finger lines (rear finger electrodes) **270** connected to a back surface field layer **250** on the other side of the substrate **210**. The solar cell **200** may further comprise a first anti-reflection film **230** on the emitter layer **220** and a second anti-reflection film **260** on the back surface field layer **250**.

[0063] The substrate **210**, the first anti-reflection film **230**, the front finger lines **240**, the second anti-reflection film **260**, and the rear finger lines **270** are similar to corresponding portions as described in FIGS. **1** to **3**. Thus, their overlapping descriptions are not repeated.

[0064] With reference to FIG. **4**, the emitter layer **220** may include a first area **224** adjoining the plurality of front finger lines **240** and a second area **222** that are between areas among the plurality of front finger lines **240**, namely, the respective areas that are between a plurality of first areas **224**. In this instance, doping density of the first area **224** may be made larger than that of the second area **122** while doping depth b' of the second area may be made deeper than the doping depth a' of the first area **224**.

[0065] FIG. **5** illustrates a doping profile of the emitter layer **220** of FIG. **4**. A of FIG. **5** denotes the case (or profile) where the entire emitter layer **220** has a doping depth b' of the second area **222** while B denotes the case (or profile) where the entire emitter layer **220** has a doping depth a' of the first area **224**. In this instance, areas formed by the respective graphs A and B of FIG. **5** have the same size. In other words, though doping depth of A of FIG. **5** is deeper than that of B, A and B have the same resistance value, both being set to 70 Ω/□.

[0066] FIG. **6** illustrates results of measuring varying resistance of the emitter layer **220** having a doping profile as shown in FIG. **4**. With reference to FIG. **6**, as shown in (a) of FIG. **6**, Jsc is somewhat reduced in the case A where a doping depth for the emitter layer **220** is deeper than that of the case B. However, as shown in (b) of FIG. **6**, since surface recombination velocity (SRV) for A is improved as surface doping density is lowered, Voc is increased significantly compared with the case B. As a result, as shown in (c), the overall efficiency of a solar cell is increased for A where doping depth is deeper than that of B.

[0067] Meanwhile, the first area **224** is a high density doping area for reducing contact resistance against the front finger lines **240**. Thus, since there are high chances that recombination sites for minor carriers are increased, it is preferable but not required that doping depth a' of the first area **224** is made shallower than the doping depth b' of the second area **222**. By doing so, reduction of Jsc due to recombination of carriers may be prevented or reduced.

[0068] Therefore, a solar cell **200** according to one embodiment of the invention may compensate the amount of reduction of the Jsc due to recombination of carriers as well as the amount of increase of the Voc by forming thickness b' of the second area **222** to be larger than the thickness a' of the first area **224** adjoining the front finger lines **240**, and may

improve the fill factor of the solar cell **200** by lowering a contact resistance against the front finger lines **240**.

[0069] The first area **224** of the emitter layer **220** may have a doping density ranging from 1E19 to 1E21 and surface resistance of 30 to 70 WO, for instance 40 to 60Ω/□. On the other hand, the second area **222** of the emitter layer **220** may have a doping density ranging from 5E18 to 1E20 and surface resistance of 70 to 150Ω/□, for instance 90 to 120 Ω/□.

[0070] Meanwhile, the back surface field layer **250** may have the same structure as the emitter layer **220**. In other words, the back surface field layer **250** may comprise a third area **254** adjoining the plurality of rear finger lines **270** and a fourth area **252** corresponding to the areas among the plurality of rear finger lines **270**, namely, the respective areas that are between a plurality of third areas **254**. In this instance, doping depth d' of the fourth area **252** may be made deeper than the doping depth c' of the third area **254**.

[0071] The structure above provides the same result as the emitter layer **220** described above. In other words, the Jsc is reduced by some amount. However, the Jsc may be compensated as the doping thickness c' of the third area **254** is reduced. Besides, since the Voc is improved as the doping thickness d' of the fourth area **252** is made thicker, the overall efficiency of the solar cell may be further improved.

[0072] On the other hand, a doping density of impurities in the third area **254** may be made larger than a doping density of impurities in the fourth area **252**, reducing contact resistance against the rear finger lines **270**. In this instance, the third area **254** may be set to have a doping density of 1E19 to 1E21 and surface resistance of 30 to 70Ω/□, for instance 40 to 60Ω/□while the fourth area **252***a* doping density of 5E18 to 1E20 and surface resistance of 70 to 150Ω/□, for instance 90 to 120 Ω/□.

[0073] In this instance, a thickness of the back surface field layer **250** and a thickness of the emitter layer **220** may be different from each other. In other words, if the substrate **210** is an N-conductive type, the thickness of the back surface field layer **250** doped with an N-type impurity (e.g., P) may be made thicker than the thickness of the emitter layer **220** doped with a P-type impurity (e.g., B). Due to this, the overall series resistance of the solar cell **200** is reduced, increasing the FF of the solar cell **200**. More specifically, a doping thickness c' of the third area **254** of the back surface field layer **250** is thicker than the doping thickness a' of the first area **224** of the emitter layer **220**, and a doping thickness d' of the fourth area **252** of the back surface field layer **250** may be made thicker than the doping thickness b' of the second area **222** of the emitter layer **220**. Also, a width of the fourth area **252** of the back surface field layer **250** may be made larger than a width of the second area **222** of the emitter layer **220**.

[0074] Also, if the substrate **210** is a P-conductive type, a thickness of the emitter layer **220** doped with an N-type impurity (e.g., P) may be made thicker than the thickness of the back surface field layer **250** doped with a P-type impurity (e.g., B). Due to this, a density of surface impurities of the emitter layer **220** may be reduced and forming a deep junction is made simple. Thus, open circuit voltage Voc of the solar cell **200** may be increased. More specifically, the doping thickness c' of the third area **254** of the back surface field layer **250** is thinner than the doping thickness a' of the first area **224** of the emitter layer **220**, and the doping thickness d' of the fourth area **252** of the back surface field layer **250** is thinner than the doping thickness b' of the second area **222** of the emitter layer **220**. Also, a width of the fourth area **252** of the back surface field layer **250** may be made smaller than the width of the second area **222** of the emitter layer **220**.

[0075] FIG. **4** further illustrates a situation where the back surface field layer **250** is separated from the edge of the substrate **210** by a gap (or a distance) T**1** while the emitter layer **220** is separated from the edge of the substrate **210** by a gap (or a distance) T**2**. Due to the above configuration, the back surface field layer **250** and the emitter layer **220** may be prevented from being shorted and hot spots generated as excessive currents flow through the side surface of the solar cell **200** may be suppressed. Also, an additional edge isolation process used for preventing the front and the rear surface of the substrate **210** from being shorted may be omitted.

[0076] In this instance, the distance T**1** between the back surface field layer **250** and the edge of the rear surface of the substrate **210**, and the distance T**2** between the emitter layer **220** and the edge of the front surface of the substrate **210** may be 2 to 300 μm. If the above gaps T**1**, T**2** are shorter than 2 μm, the back surface field layer **250** and the emitter layer **220** may be shorted due to diffusion of impurities, which may be a cause for degrading the efficiency of the solar cell **200**. On the other hand, if the above gaps T**1**, T**2** are larger than 300 μm, size of the back surface field layer **250** and the emitter layer **220** to be formed are reduced and thus, recombination of electron-hole pairs is facilitated, which may degrade the efficiency of the solar cell **200**.

[0077] However, embodiments of the invention are not limited to the above situation. Rather, it is sufficient that either of the back surface field layer **250** and the emitter layer **220** is separated from the edge of the substrate **210**.

[0078] FIGS. **7** to **12** illustrate a manufacturing method for a solar cell according to one embodiment of the invention. First, FIGS. **7** to **11** illustrate one example of a process for manufacturing a solar cell **100** shown in FIGS. **1** to **3**. Accordingly, a manufacturing method for a solar cell **100** according to one embodiment of the invention will be described with reference to FIGS. **7** to **11**. First of all, as shown in FIG. **7**, silicon semiconductor substrate **110** of a first conductive type is first doped with a first impurity of a second conductive type that is opposite the first conductive type so as to have a first doping density, to thereby form a second area **122** of the emitter layer **120** described above. Forming the second area **122** may be carried out by doping the substrate **110** with the first impurity of the second conductive type according to a heat diffusion method, a laser doping method, or an ion implantation method. Other methods for doping the substrate **110** may be used.

[0079] This embodiment of the invention describes a case where the emitter layer **122** is formed on the entire front surface of the substrate **110**, but embodiments of the invention are not limited to the above case. Therefore, if the emitter layer **220** is to be formed separated from the edge of the substrate **110** as is the case of the solar cell **200** of FIG. **4**, the substrate **110** may be first doped with a mask wrapping (or covering) the periphery of the substrate **110**. The shape of such a mask is similar to the one shown in (a) of FIG. **9**.

[0080] Meanwhile, a convex-concave structure may be formed first on the substrate **110**. The convex-concave structure may be formed by applying a process of dipping the substrate **110** in an etching solution. The convex-concave structure may be formed in the shape of a pyramid, a square, or a triangle. Other shapes may be used to form the convex-concave structure.

[0081] Next, prepared is a first mask **300** including openings **310** corresponding to positions at which a plurality of front finger lines **140** are to be formed as shown in (a) of FIG. **8**. As shown in (b) of FIG. **8**, the mask **300** is positioned on the substrate **110** which is second doped with the first impurity of the second conductive type by using the ion implantation method and so on, thereby forming the first area **124** of the emitter layer **120** as shown in (c) FIG. **8**. The openings **310** may be formed not only at the positions where the front finger lines **140** are to be formed, but also at the positions where the front surface bus electrodes (**180** of FIG. **1**) are to be formed. Accordingly, as shown in (a) of FIG. **8**, the openings **310** may be formed to have a grid shape to correspond to the front finger lines **140** and the front surface bus electrodes **180**.

[0082] The second doping may be carried out by employing the ion implantation method, for example. The first area **124** formed by the second doping has a second doping density higher than that of the second area **122**. The second doping density may range from 1E19 to 1E21. Accordingly, as described later, contact resistance against the front finger lines **140** may be reduced. Therefore, a selective emitter structure may be provided.

[0083] Next, as shown in FIG. **9**, by using a second mask **410** having a part **412** to cover or overlap the edge part of the rear surface of the substrate **110**, the fourth area **152** of the back surface field layer **150** is formed.

[0084] The fourth area **152** prevents or reduces recombination of electron-hole pairs separated from the rear surface of the substrate **110**. The fourth area **152** may be formed by doping the substrate **110** with a second impurity of the same conductive type as the substrate **110** according to a heat diffusion method, a laser doping method, or an ion implantation method, as well as other methods. The fourth area **152** may have a doping density ranging from 5E18 to 1E20 and a doping depth of 0.3 μm to 1 μm.

[0085] Also, since the second mask **410** used for forming the fourth area **152** has the part **412** that covers or overlaps a distance T measured from the edge part of the rear surface of the substrate **110**, the second mask **410** may be used to prevent contact of the second area **152** with the emitter layer **120** which is formed on the side surface of the substrate **110**. Therefore, an additional edge isolation process for insulating the front and the rear surfaces of the substrate **110** may be omitted.

[0086] Owing to the above structure, the back surface field layer **150** is formed separated from the edge of the rear surface of the substrate **110** by a distance 'T'. In this instance, the distance T between the back surface field layer **150** and the edge of the rear surface of the substrate **110** may range 2 to 300 μm.

[0087] Meanwhile, the second mask **410** may also be used for forming the second area **122** of the emitter layer **120** so that the emitter layer **120** is separated from the edge of the substrate **110**. Accordingly, the second mask **410** may be used for forming both of the emitter layer **120** and the back surface field layer **150**, thereby making both of the emitter layer **120** and the back surface field layer **150** be separated from the edge of the substrate **110**. If the second mask **410** is used to form the second area **122**, the second mask **410** may be used instead of the first mask **300** and replace the process shown in FIG. **7**.

[0088] Next, as shown in (a) of FIG. **10**, prepared is a third mask **420** containing openings **422** corresponding to positions at which a plurality of rear finger lines **170** are to be formed. As shown in (b) of FIG. **10**, the mask **420** is positioned on the rear surface of the substrate **110** and second doped with a second impurity by using, e.g., an ion implantation method, forming the third area **154** of the back surface field layer **150** as shown in (c) of FIG. **10**.

[0089] The openings **422** of the third mask **420** may be formed not only at positions corresponding to where the rear finger lines **170** are to be formed, but also at positions corresponding to where the rear surface bus electrodes (**190** of FIG. **1**) are to be formed on the substrate **110**. Accordingly, as shown in (a) of FIG. **10**, the openings **422** may be formed to have a grid shape to correspond to the back surface finger lines **170** and the back surface bus electrodes **190**.

[0090] Since the third mask **420** also covers a distance of T measured from the edge part of the rear surface of the substrate **110**, the third mask **420** maintains the gap T formed by using the second mask **410** to prevent contact of the emitter layer **120** having the fourth area **152** the side surface of the substrate **110**. Therefore, an additional edge isolation process for insulating the front and the rear surface of the substrate **110** may be omitted.

[0091] Owing to the above structure, the back surface field layer **150** is formed by being separated by a gap 'T' from the edge of the rear surface of the substrate **110**. In this instance, the distance T between the back surface field layer **150** and the edge of the rear surface of the substrate **110** may range 2 to 300 μm.

[0092] In this instance, the number of openings **422** formed in the third mask **420** may be larger than the number of openings **310** formed in the first mask **300**.

[0093] Subsequently, heat treatment is applied simultaneously to the emitter layer **120** doped with the first impurity and the back surface field layer **150** doped with the second impurity.

[0094] On the other hand, the first and the second impurity may be doped by using an ion implantation, for example. In this instance, the ion implantation for doping of the first and the second impurity may be carried out without changing processing conditions and accordingly, productivity in manufacturing of solar cells **100** may be increased. In other words, after the first impurity is doped by using the ion implantation, the second impurity may be doped by using the ion implantation under the same conditions; accordingly, the first and the second impurity may be doped, each with a similar projected depth range Rp into the substrate **110**.

[0095] On the other hand, in one example embodiment of the invention, if the substrate **210** is an N-conductive type, a first impurity may be a P-type impurity (e.g., B) while a second impurity may be an N-type impurity (e.g., P). If the emitter layer **120** doped with the first impurity and the back surface field layer **150** doped with the second impurity are calcinated or heat treated at the same time, since diffusion is better facilitated for an N-type impurity than for a P-type impurity, a thickness of the back surface field layer **150** doped with the second impurity becomes thicker than a thickness of the emitter layer **120**. Additionally, the overall series resistance of the solar cell **200** is reduced and thus, FF of the solar cell **100** may be increased.

[0096] In another example embodiment of the invention, if the substrate **210** is an N-conductive type, the first impurity may be an N-type impurity (e.g., P) while the second impurity may be a P-type impurity (e.g., B). Therefore, the thickness of the emitter **120** becomes thicker than the thickness of the back

surface field layer **150**, and a deep junction is formed easily. Therefore, an open circuit voltage Voc of the solar cell **200** may be increased.

[0097] Next, as shown in FIG. **11**, a first anti-reflection film **130** and front finger lines **140** are formed on the emitter layer **120**, and a second anti-reflection film **160** and rear finger lines **170** are formed on the back surface field layer **150**. Also, a passivation layer may be further formed on the emitter layer **120** and the back surface field layer **150**. That is, an oxide film may be formed at a time when heat treatment for the emitter layer **120** and the back surface field layer **150** is performed, whereby the oxide film may be used as the passivation layer.

[0098] The first anti-reflection film **130** and the second anti-reflection film **160** may be formed by employing a vacuum deposition method, a chemical vapor deposition method, spin coating, screen printing, or spray coating, but is not limited thereto.

[0099] The front finger lines **140**, for example, may be formed in such a way that paste for front surface electrodes is screen printed on the area on the substrate **110** where the front finger lines **140** are to be formed by using a mask, and heat treatment is applied for the paste. In the printed paste, as silver contained in the paste is transformed to a liquid by heating at high temperatures and is crystallized again into a solid after the heating, the silver makes contact with the first area **124** of the emitter layer **120** due to a fire-through phenomenon in which the printed paste penetrates the first anti-reflection film **130** through use of a glass frit.

[0100] Also, the front finger lines **140** may be formed by removing of the first anti-reflection film **130** and/or the passivation layer by using laser ablation, depositing a seed layer based on Ni at the removed portions, and then depositing a metal layer by using coating or sputtering. In addition, the front finger lines **140** may be formed by a laser firing method and a method of using screen printing after laser ablation, but is not limited thereto.

[0101] Since the rear finger lines **170** may be formed in a similar way as the front finger lines **140**, a detailed description of forming the rear finger lines **170** will not be given.

[0102] Meanwhile, the number of rear finger lines **170** to be formed may differ from the number of front finger lines **140** to reduce or prevent the reduction of resistance of the solar cell **100** and the degradation of photovoltaic conversion efficiency of the solar cell **100**. For example, the number of rear finger lines **170** may be larger than that of the front finger lines **140**.

[0103] FIG. **12** illustrates a comb mask. By using the comb mask **500**, the first area **124** and the second area **122** of the emitter layer **120** or the third area **154** and the fourth area **152** of the back surface field layer **150** may be doped with impurities at the same time.

[0104] The comb mask **500** includes a supporting unit **510** and a plurality of teeth **520** that extend from the supporting unit **510**. Among a plurality of teeth **520**, openings in the form of slots **530** are formed. To give a simplified example of a method for forming the emitter layer **120** by using such a comb mask **500**, the comb mask **500** is fixed at a position on the substrate **110**, and the first impurity is injected on the substrate **110** through the slots **530**, and thereby forming the first area **124** of the emitter layer **120**. After the first area **124** is formed, the substrate **110** positioned in a lower part of the comb mask **500** moves and the first impurity is injected into the substrate **110** continuously, thereby forming the second area **122**. In this instance, doping densities of the first **124** and the second area **122** may be controlled by adjusting an ion injection time, an amount of ions used for doping an, ion acceleration energy, and so on.

[0105] Therefore, the emitter layer **120** and the back surface field layer **150**, or the emitter layer **220** and the back surface field layer **250** of FIG. **4** may be formed at the same time (or together) by using the comb mask.

[0106] FIG. **13** is a cross-sectional view of a solar cell module according to one embodiment of the invention and FIG. **14** is a magnified view of C of FIG. **13**. With reference to FIG. **13**, a solar cell module **600** according to one embodiment of the invention may include a plurality of solar cells **650**, a plurality of ribbons **643** connecting a plurality of solar cells **650** electrically, a first sealing film **631** and a second sealing film **632** sealing a plurality of solar cells **650** at both sides, a front substrate **610** protecting one surface of the solar cells **650**; and a rear substrate **620** protecting the other surface of the solar cells **650**.

[0107] The plurality of solar cells **650** are connected to each other electrically through the ribbon **643**, thereby forming a string **640**. For example, two lines of the ribbon **643** are attached on the upper and lower part of the solar cells **650** through a tabbing process, and connecting the plurality of solar cells **650** electrically. In other words, the tabbing process includes spraying flux on one surface of the solar cells **650**, positioning the ribbon **643** at the solar cells **650** on which the flux has been sprayed, and applying a calcination process (or applying heat).

[0108] On the other hand, as shown in FIG. **14**, a conductive film **660** may be attached between one surface of the solar cells **650** and the ribbon **643**; and then the plurality of solar cells **650** may be connected in series or in parallel by using thermo-compression to fix the ribbon **643** to the plurality of solar cells **650**.

[0109] The conductive film **660** may comprise a base film **662** and conductive particles **664** distributed across the base film **662**. Conductive particles **664** are exposed to the outside of the base film **662** due to thermo-compression, and the solar cells **650** and the ribbon **643** may be connected to each other electrically due to the exposed conductive particles **664**.

[0110] The base film **662** may be formed using a thermosetting resin with excellent adhesion and insulation property such as epoxy resin, acrylic resin, polyimide resin, and polycarbonate resin, for example. Conductive particles **664** may be gold, silver, nickel, or copper particles, for example, showing excellent conductive property. Also, the conductive particles **664** may be particles formed by coating a metal layer onto a polymer particle using the above noted metals.

[0111] Therefore, when the plurality of solar cells **650** are formed into a module by being connected to each other using a conductive film, a process temperature thereof may be lowered, thus preventing the string **640** from becoming bent.

[0112] Again, with reference to FIG. **13**, the first sealing film **631** and the second sealing film **632** seal the plurality of solar cells **650** at both surfaces. The first sealing film **631** and the second sealing film **632** are fastened to each other by lamination, isolating the plurality of solar cells **650** from moisture or oxygen which can adversely affect the plurality of solar cells **650**.

[0113] Also, the first sealing film **631** and the second sealing film **632** help each element of the solar cells **650** to combine chemically with each other. For the first sealing film **631** and the second sealing film **632**, ethylene vinyl acetate

(EVA) copolymer resin, polyvinyl butyral, ethylene vinyl acetate partial oxide, silicon resin, ester resin, olefin resin, etc., may be employed.

[0114] It is preferable but not required that the front substrate **610** is positioned on the first sealing film **631** for solar rays to pass through, and the substrate **610** is made of reinforced glass to protect the solar cells **650** from external shocks. Also, it is more preferable but not required that a low iron reinforced glass is used for reducing or preventing reflection of solar rays and increasing permeability of solar rays.

[0115] The rear substrate **620** is intended to protect solar cells **650** at the rear surface of the solar cells **650**, providing a water proofing function, an insulation function, and an ultraviolet blocking function. The rear substrate **620** may be TPT (Tedlar/PET/Tedlar) type but is not limited thereto. Also, the rear substrate **620** may be formed by transparent materials through which solar rays may pass.

[0116] The solar cell according to the invention is not limited to combination of the embodiments described above or carrying out the methods described above. On the contrary, the whole or part of the respective embodiments may be combined selectively so that various modifications of the embodiments should be made possible.

[0117] According to the invention, by including an emitter layer and a back surface field layer with different thicknesses from each other, a photovoltaic conversion efficiency of a solar cell may be improved.

[0118] Also, by injecting impurities of the emitter layer and the back surface field layer through ion implantation and applying calcination at the same time, productivity of a solar cell may be increased.

[0119] In the above embodiment of FIGS. **1** to **3**, the emitter layer includes the first area **124** and the second area **122** having different doping concentrations, and the back surface field layer **150** includes the third area **154** and the fourth area **152** having different doping concentrations. However, the invention is not limited thereto.

[0120] Thus, with reference to FIG. **15**, an emitter layer **120***a* may include only a second area **122** that is a shallow or lightly doping area. Also, with reference to FIG. **16**, a back surface field layer **150***a* may include only a fourth area **152** that is a shallow doping area. In addition, with reference to FIG. **17**, the emitter **120***a* may include only a second area **122** that is the shallow doping area, and the back surface field layer **150***a* may include only a fourth area **152** that is the shallow doping area, simultaneously. In embodiments of the invention, a shallow doping area covers at least a majority of, if not the entirety of, the front or the back surface of the substrate **110**. In other words, the shallow doping area covers at least 51% to 100% of the front or the back surface of the substrate **110**. Additionally, in the shallow doping area, a doping density or concentration of an impurity is basically homogenous, whereby there no more than 10% variation from a desired value, such as a mean value of a doping density or concentration. In embodiments of the invention, the variation may be between 0% to not more than 10%, for example.

[0121] In other embodiments of the invention, the substrate **110** may additionally include remaining areas of the front or the back surface of the substrate **110** that are not covered by the shallow doping area, which are high doping areas having a greater doping concentration than the respective shallow doping areas. For example, for the emitter layer **120** or **120***a*, the remaining area may be the first

[0122] In these instances, the thicknesses of the shallow doping areas of the emitter layer **120** or **120***a* and the back surface field layer **150** or **150***a* are different from each other. In embodiments of the invention, the difference of the thicknesses may be 5% to 50%. In embodiments of the invention, the thicknesses of the shallow doping areas of the emitter layer **120** or **120***a* may be greater than the thicknesses of the back surface field layer **150** or **150***a*, or vice-versa. Thus, the thickness a of the second area **122** is different from the thickness c of the fourth area **152**.

[0123] Also, the modified embodiments related to the embodiment of FIGS. **1** to **3** may be applied to the embodiments of FIGS. **15** to **17**.

[0124] Example embodiments of the invention have been described. However, the invention is not limited to the specific embodiments described above; various modifications of the embodiments are possible by those skilled in the art to which the invention belongs without leaving the scope of the invention defined by the appended claims. Also, modifications of the embodiments should not be understood individually from the technical principles or prospects of the invention.

What is claimed is:

1. A method for manufacturing a solar cell, the method comprising:

preparing a silicon semiconductor substrate of a first conductive type;

forming a first impurity doped region by a first ion implantation of a first impurity having a second conductive type opposite the first conductive type on a first surface of the silicon semiconductor substrate;

forming a second impurity doped region by performing a second ion implantation of a second impurity having the first conductive type on a second surface of the silicon semiconductor substrate opposite to the first surface; and

performing a heat treatment to both of the first impurity doped region and the second impurity doped region to form an emitter layer and a back surface field layer, respectively,

wherein the emitter layer includes at least a first shallow doping area and the back surface field layer includes at least a second shallow doping area, and

wherein a thickness of the first shallow doping area of the emitter layer is different from a thickness of the second shallow doping area of the back surface field layer.

2. The method for manufacturing a solar cell of claim **1**, wherein the thickness of the first shallow doping area of the emitter layer is greater than the thickness of the second shallow doping area of the back surface field layer.

3. The method for manufacturing a solar cell of claim **1**, wherein the thickness of the first shallow doping area of the emitter layer is less than the thickness of the second shallow doping area of the back surface field layer.

4. The method for manufacturing a solar cell of claim **1**, wherein the thickness of the first shallow doping area of the emitter layer is 0.3 μm to 1 μm, and the thickness of the second shallow doping area of the back surface field layer is 0.3 μm to 1 μm.

5. The method for manufacturing a solar cell of claim **1**, wherein a doping density of the first shallow doping area of the emitter layer varies by no more than 10% from a doping density of the second shallow doping area of the back surface field layer.

6. The method for manufacturing a solar cell of claim **5**, wherein the doping density of the first shallow doping area of the emitter layer is equal to the doping density of the second shallow doping area of the back surface field layer.

7. The method for manufacturing a solar cell of claim **5**, wherein a doping density of the first shallow doping area of the emitter layer is from 5E18 to 1E20, and a doping density of the second shallow doping area of the back surface field layer is from 5E18 to 1E20.

8. The method for manufacturing a solar cell of claim **1**, wherein the emitter layer further includes a first high doping area having a doping concentration different from that of the first shallow doping area, and the back surface field layer includes a second high doping area having a doping concentration different from that of the second shallow doping area.

9. The method for manufacturing a solar cell of claim **8**, wherein the doping concentration of the first high doping area is greater than that of the first shallow doping area, and the doping concentration of the second high doping area is greater than that of the second shallow doping area.

10. The method for manufacturing a solar cell of claim **1**, wherein the emitter layer further includes a first high doping area having a thickness different from that of the first shallow doping area, and the back surface field layer includes a second high doping area having a thickness different from that of the second shallow doping area.

11. The method for manufacturing a solar cell of claim **10**, wherein the thickness of the first high doping area is greater than that of the first shallow doping area, and the thickness of the second high doping area is greater than that of the second shallow doping area.

12. A solar cell, comprising:

a silicon semiconductor substrate of a first conductive type;

an emitter layer having a second conductive type opposite the first conductive type and formed on a first surface of the silicon semiconductor substrate;

a back surface field layer having the first conductive type and formed on a second surface of the silicon semiconductor substrate opposite to the first surface; and

wherein the emitter layer includes at least a first shallow doping area and the back surface field layer includes at least a second shallow doping area, and

wherein a thickness of the first shallow doping area of the emitter layer is different from a thickness of the second shallow doping area of the back surface field layer.

13. The solar cell of claim **12**, wherein the thickness of the first shallow doping area of the emitter layer is greater than the thickness of the second shallow doping area of the back surface field layer.

14. The solar cell of claim **12**, wherein the thickness of the first shallow doping area of the emitter layer is less than the thickness of the second shallow doping area of the back surface field layer.

15. The solar cell of claim **12**, wherein the thickness of the first shallow doping area of the emitter layer is 0.3 μm to 1 μm, and the thickness of the second shallow doping area of the back surface field layer is 0.3 μm to 1 μm.

16. The solar cell of claim **12**, wherein the emitter layer further includes a first high doping area having a doping concentration different from that of the first shallow doping area, and the back surface field layer includes a second high doping area having a doping concentration different from that of the second shallow doping area.

17. The solar cell of claim **16**, wherein the doping concentration of the first high doping area is greater than that of the first shallow doping area, and the doping concentration of the second high doping area is greater than that of the second shallow doping area.

18. The solar cell of claim **12**, wherein the emitter layer further includes a first high doping area having a thickness different from that of the first shallow doping area, and the back surface field layer includes a second high doping area having a thickness different from that of the second shallow doping area.

19. The solar cell of claim **18**, wherein the thickness of the first high doping area is greater than that of the first shallow doping area, and the thickness of the second high doping area is greater than that of the second shallow doping area.

* * * * *