US 20090015703A1

(19) United States

(12) Patent Application Publication

Kim et al.

(10) Pub. No.: US 2009/0015703 A1

(43) Pub. Date: Jan. 15, 2009

(54) **PORTABLE TERMINAL HAVING TOUCH SENSING BASED IMAGE CAPTURE FUNCTION AND IMAGE CAPTURE METHOD THEREFOR**

(75) Inventors: **Jong-Hwan Kim**, Gyeonggi-Do (KR); **Kwang-Ho Eom**, Gyeonggi-Do (KR)

Correspondence Address:
LEE, HONG, DEGERMAN, KANG & WAIMEY
660 S. FIGUEROA STREET, Suite 2300
LOS ANGELES, CA 90017 (US)

(73) Assignee: **LG Electronics Inc.**

(21) Appl. No.: **12/172,076**

(22) Filed: **Jul. 11, 2008**

(30) **Foreign Application Priority Data**

Jul. 11, 2007 (KR) 10-2007-0069817

Publication Classification

(51) **Int. Cl.**
G03B 13/00 (2006.01)

(52) **U.S. Cl.** **348/333.12**; 348/E05.024

(57) **ABSTRACT**

Disclosed is a portable terminal having a touch sensing based image capture function and image capture method therefore, the method including: displaying a preview image of an object to be captured on a touch screen; recognizing (sensing) a touch input for the preview image; setting an image capture function based on the recognized touch input; and automatically performing an image capture operation according to the set capture function. The image capture function includes setting and change for a focus area, exposure, illumination, lightness, zoom-in/zoom-out and color change. Therefore, the present invention can enable the user to freely set the focus area and to perform a single or continuous image capture operation with a simple touch, thereby being utilized in all portable devices employing the touch screen.

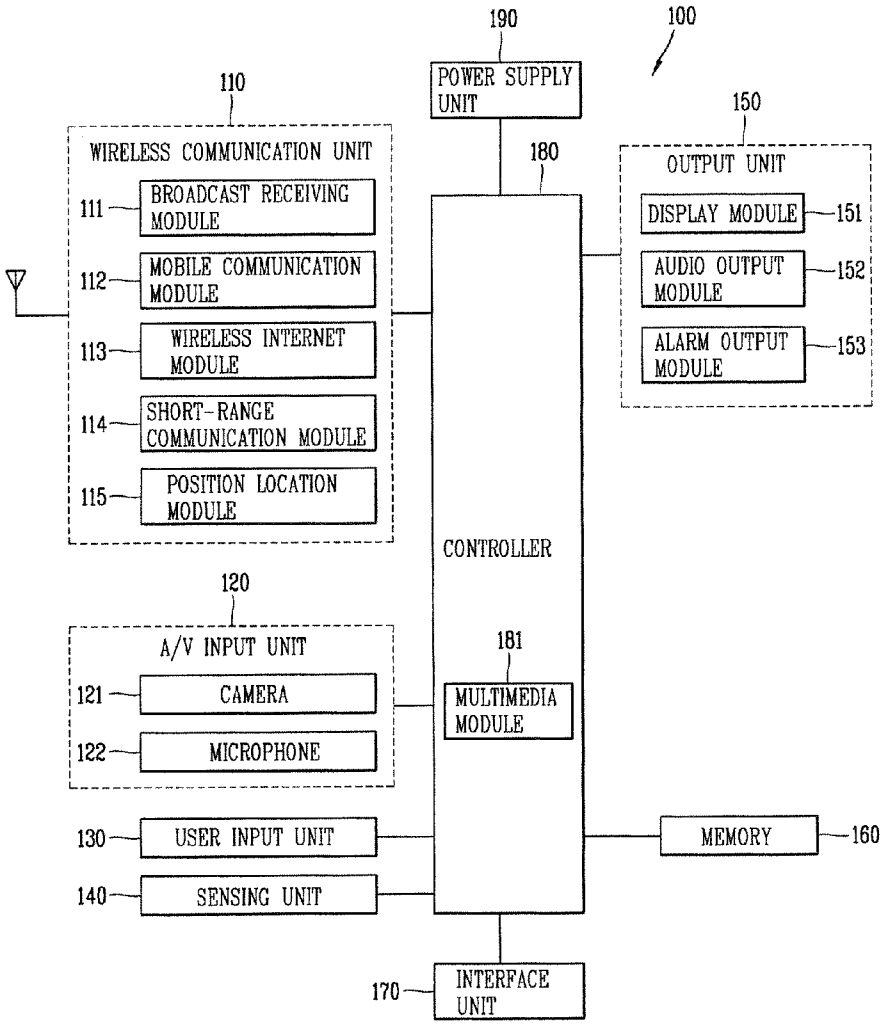

Petitioner Lenovo (United States) Inc. - EX1007

FIG. 1

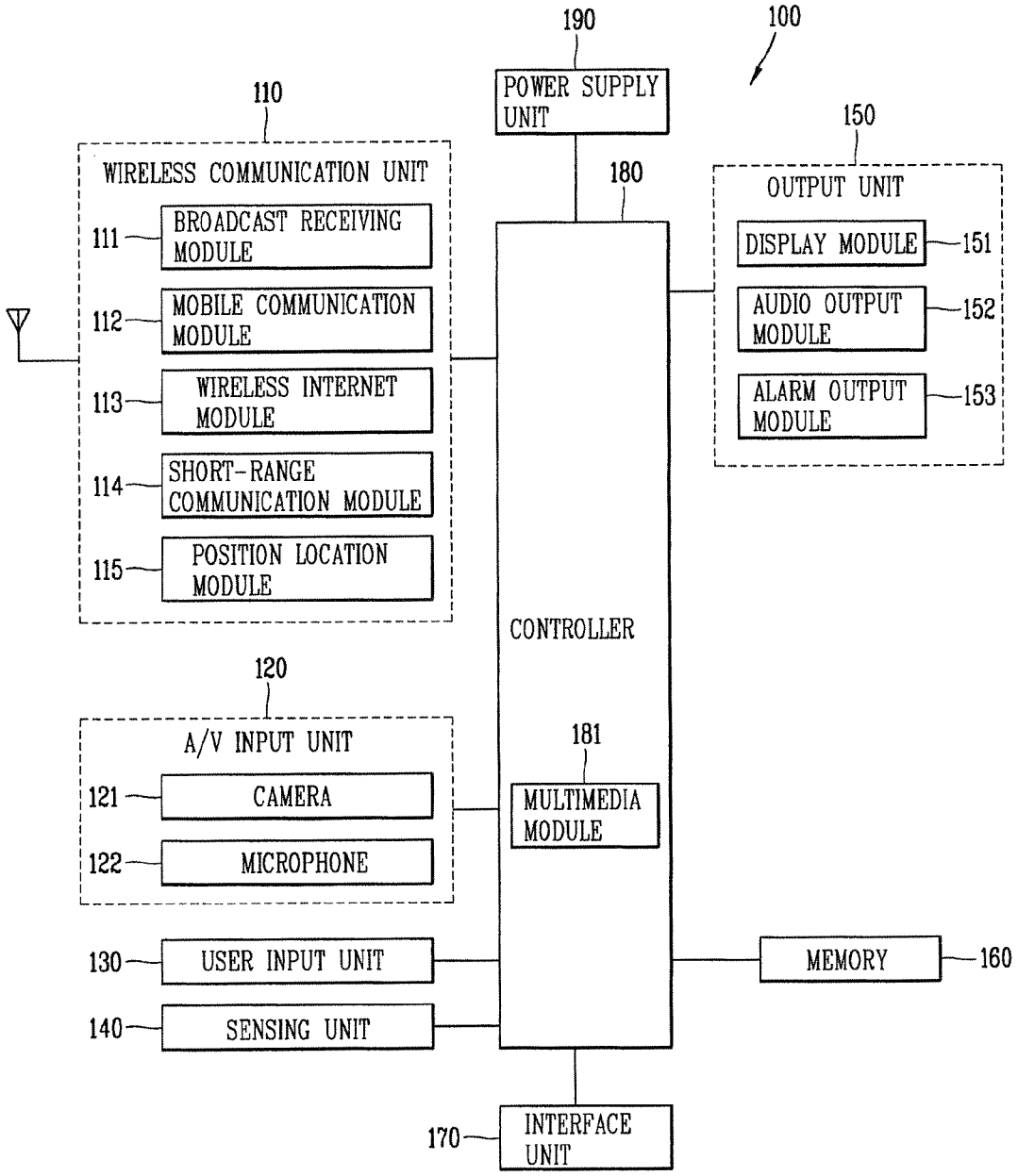
190
100
POWER SUPPLY UNIT
110
150
WIRELESS COMMUNICATION UNIT
180
OUTPUT UNIT
111
BROADCAST RECEIVING MODULE
DISPLAY MODULE
151
112
MOBILE COMMUNICATION MODULE
AUDIO OUTPUT MODULE
152
113
WIRELESS INTERNET MODULE
ALARM OUTPUT MODULE
153
114
SHORT-RANGE COMMUNICATION MODULE
115
POSITION LOCATION MODULE
CONTROLLER
120
A/V INPUT UNIT
181
121
CAMERA
MULTIMEDIA MODULE
122
MICROPHONE
130
USER INPUT UNIT
MEMORY
160
140
SENSING UNIT
170
INTERFACE UNIT

FIG. 2

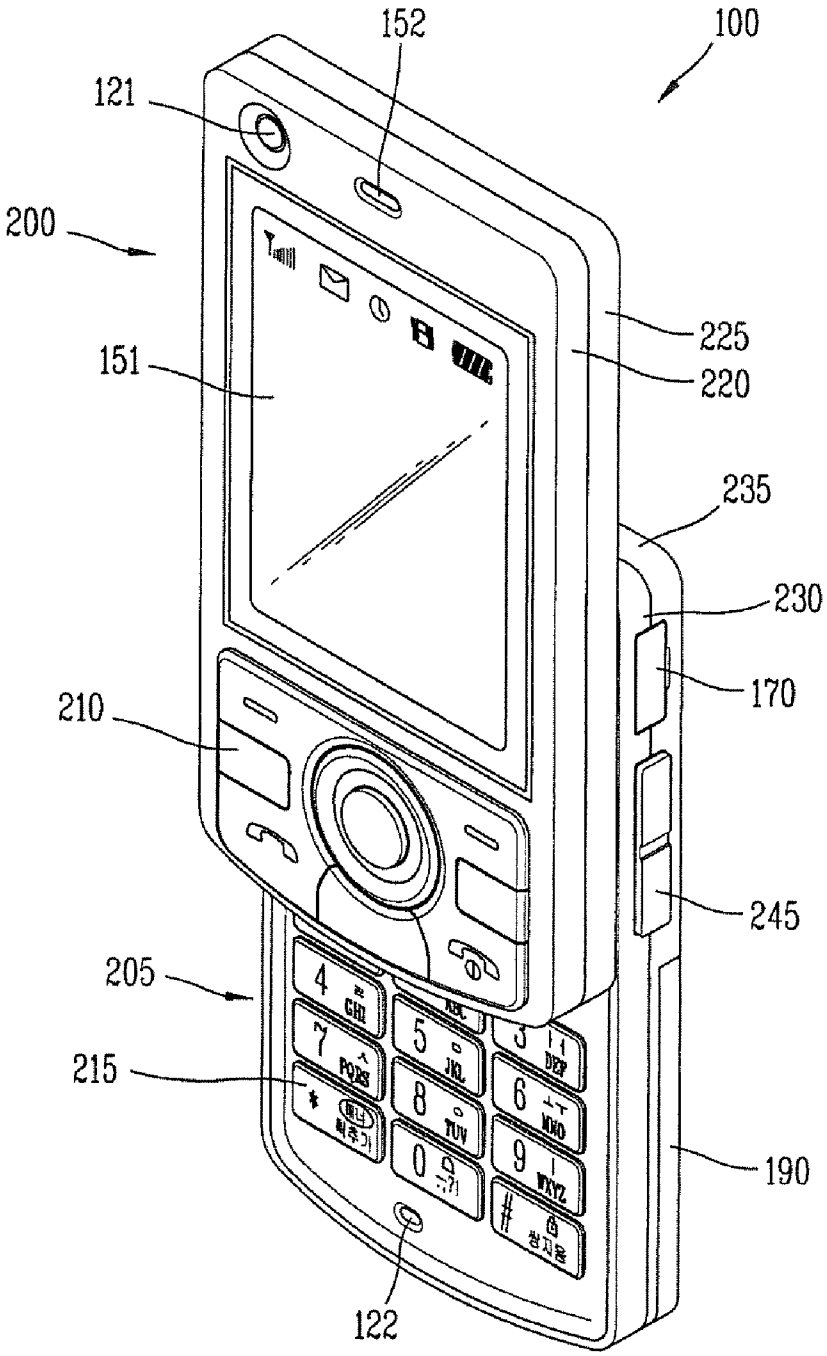

FIG. 3

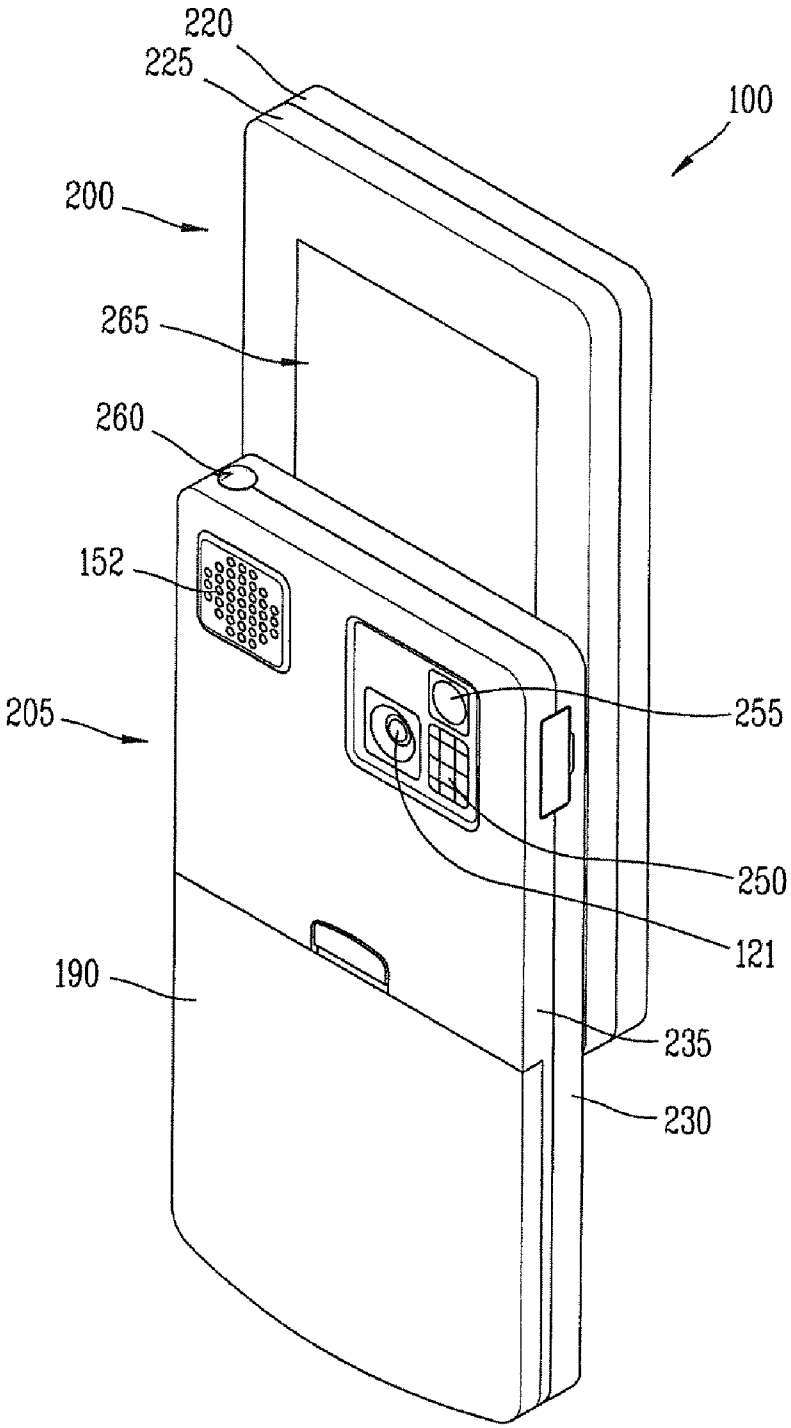

FIG. 4

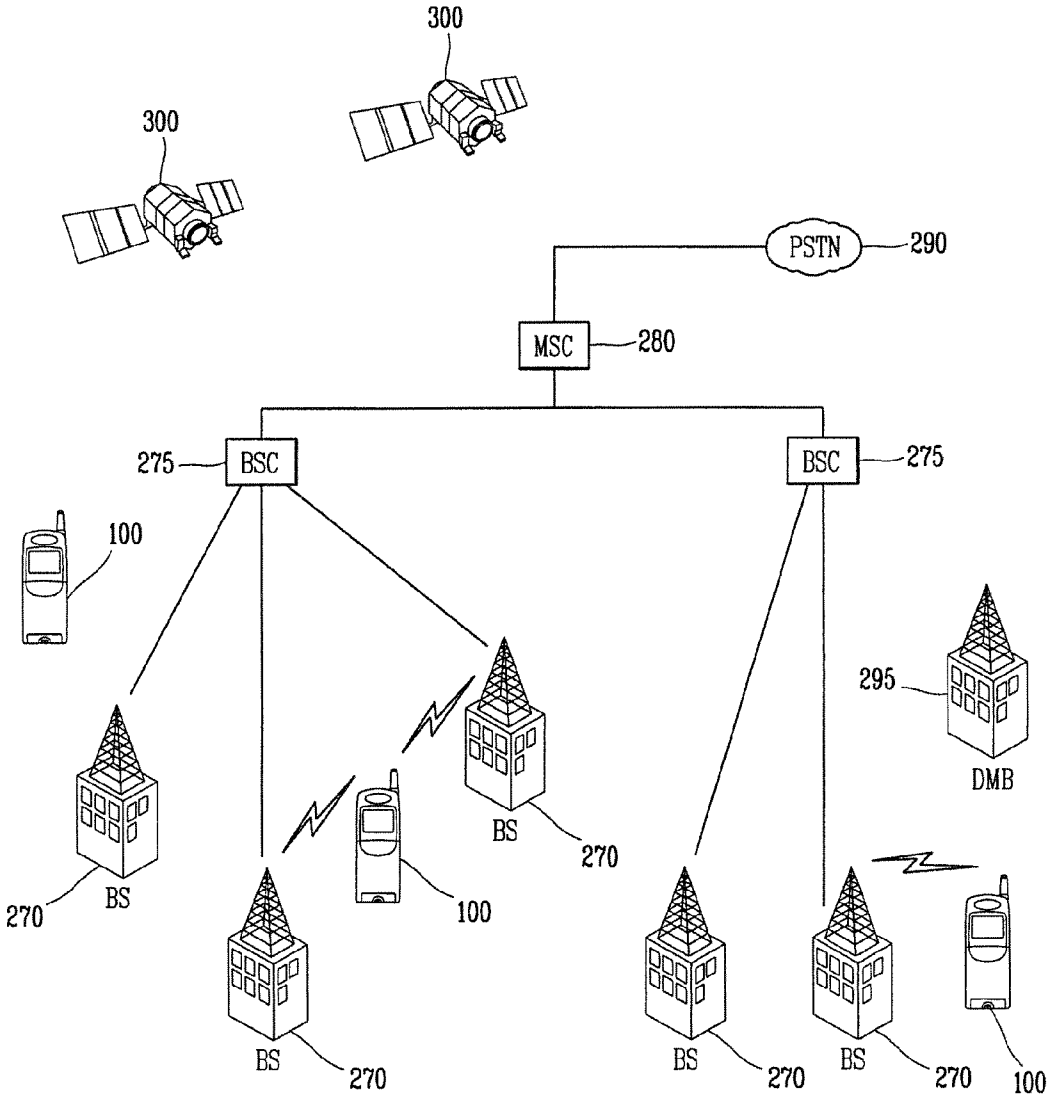
300
300
PSTN
290
MSC
280
275
BSC
BSC
275
100
295
DMB
BS
270
BS
270
100
BS
270
BS
270
BS
270
100

FIG. 5

FIG. 6

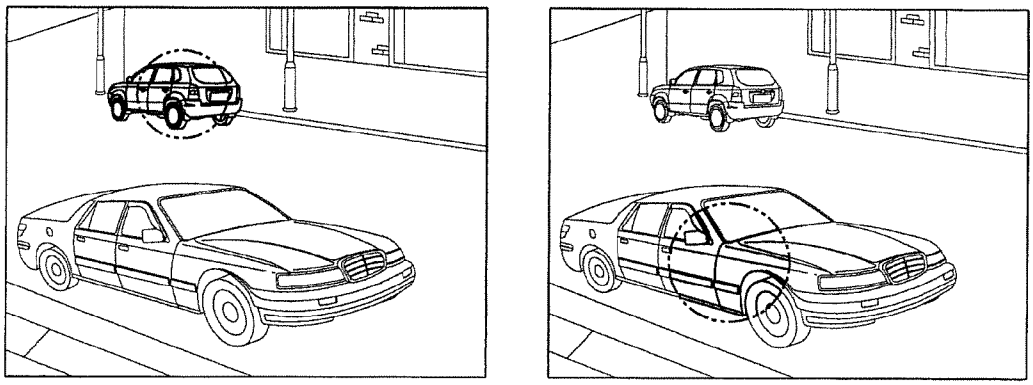

FIG. 7

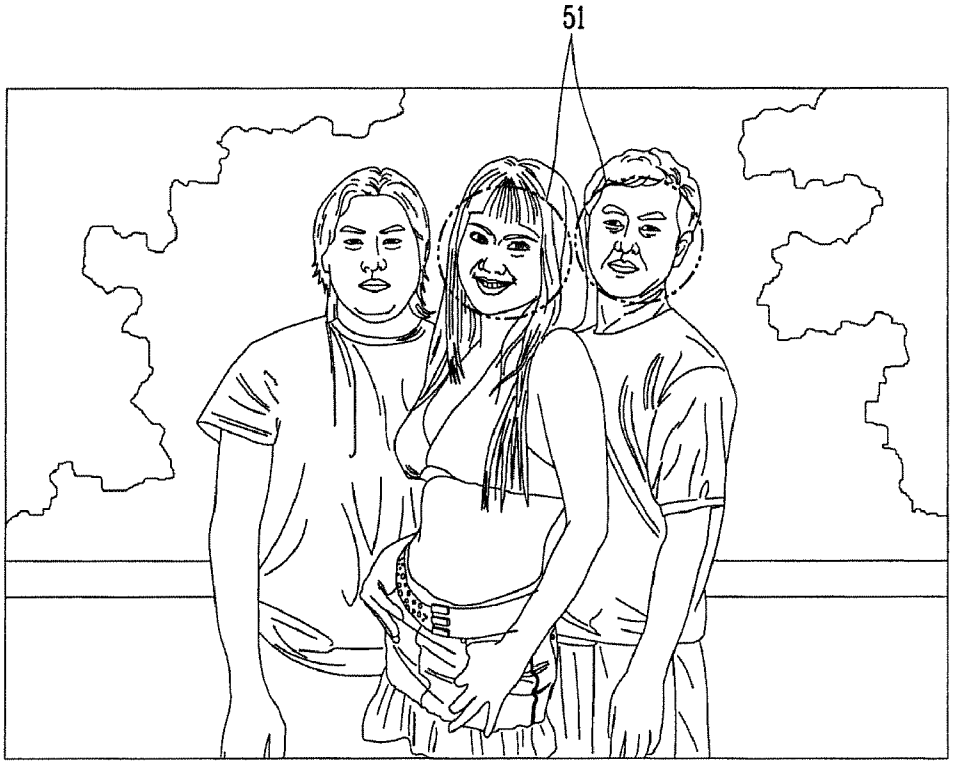
51

FIG. 8

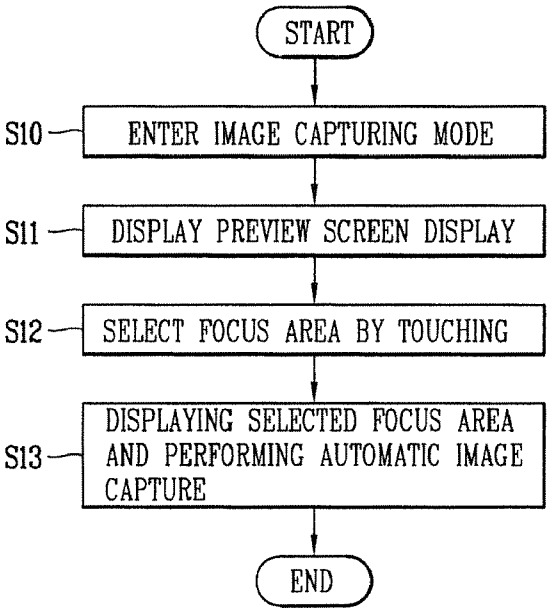
START
S10
ENTER IMAGE CAPTURING MODE
S11
DISPLAY PREVIEW SCREEN DISPLAY
S12
SELECT FOCUS AREA BY TOUCHING
S13
DISPLAYING SELECTED FOCUS AREA AND PERFORMING AUTOMATIC IMAGE CAPTURE
END

FIG. 9

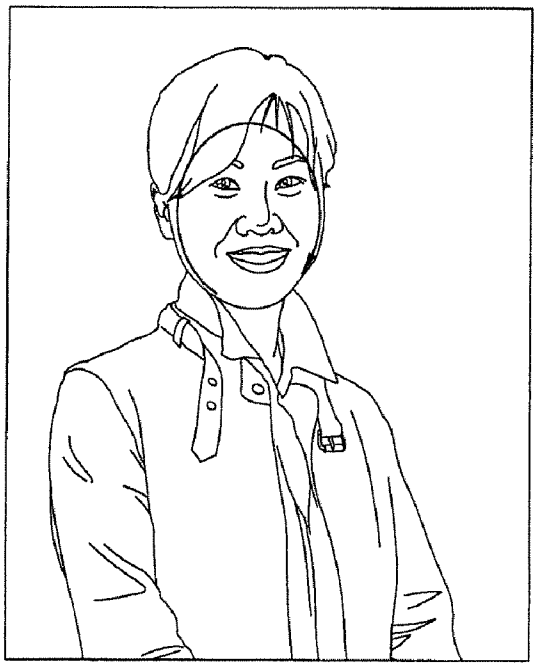

FIG. 10

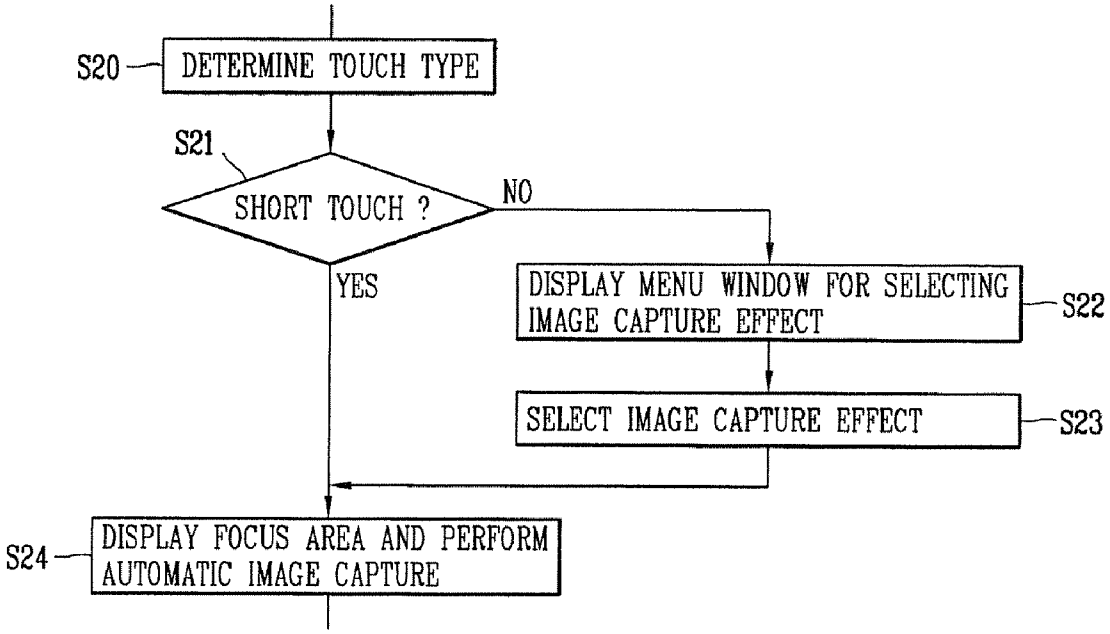
S20
DETERMINE TOUCH TYPE
S21
SHORT TOUCH ?
NO
YES
DISPLAY MENU WINDOW FOR SELECTING IMAGE CAPTURE EFFECT
S22
SELECT IMAGE CAPTURE EFFECT
S23
S24
DISPLAY FOCUS AREA AND PERFORM AUTOMATIC IMAGE CAPTURE

FIG. 11

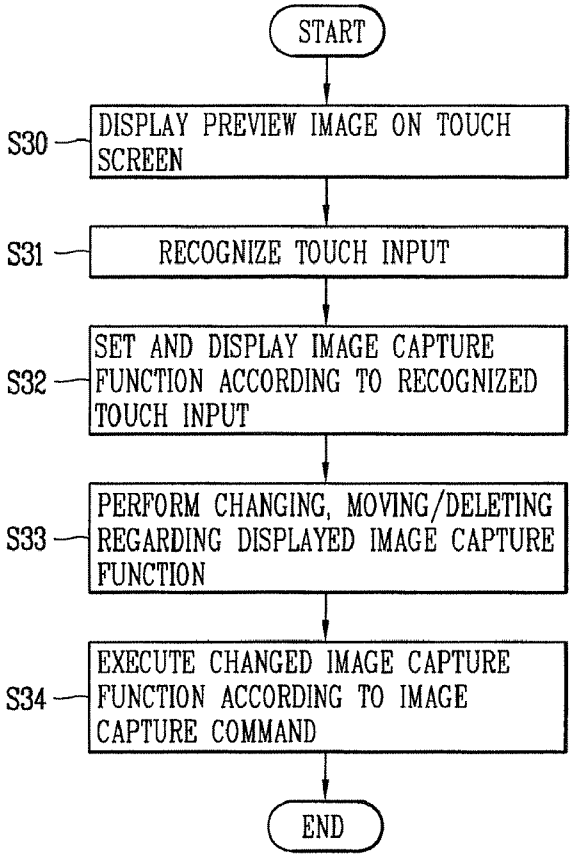
START
S30
DISPLAY PREVIEW IMAGE ON TOUCH SCREEN
S31
RECOGNIZE TOUCH INPUT
S32
SET AND DISPLAY IMAGE CAPTURE FUNCTION ACCORDING TO RECOGNIZED TOUCH INPUT
S33
PERFORM CHANGING, MOVING/DELETING REGARDING DISPLAYED IMAGE CAPTURE FUNCTION
S34
EXECUTE CHANGED IMAGE CAPTURE FUNCTION ACCORDING TO IMAGE CAPTURE COMMAND
END

FIG. 12

PORTABLE TERMINAL HAVING TOUCH SENSING BASED IMAGE CAPTURE FUNCTION AND IMAGE CAPTURE METHOD THEREFOR

RELATED APPLICATION

[0001] The present disclosure relates to subject matter contained in priority Korean Application No. 069817, filed on Jul. 11, 2007, which is herein expressly incorporated by reference in its entirety.

BACKGROUND OF THE INVENTION

[0002] 1. Field of the Invention

[0003] The present invention relates to a portable terminal having a touch sensing based image capture function and an image capture method therefore.

[0004] 2. Description of the Related Art

[0005] A portable terminal may be configured to perform a variety of functions. Examples of such functions may include data/voice communications, capturing images or videos via a camera, recording audio, playing music files via a speaker system, and displaying images or videos. Some terminals have been equipped with additional functionality that supports game playing, while other terminals have been implemented as an integrated multimedia player. More recently, the portable terminal has been equipped with a function of receiving broadcasts or multicast signals, thereby enabling a user to watch videos or television programs.

[0006] Among the various functions of the portable terminal, the function of capturing images or videos via a camera refers to a function that allows a user to capture videos or still images by using a camera provided in a portable terminal. In order to perform an image capture operation using the camera function, the user should change a terminal's mode into a camera mode through a key manipulation and then select an appropriate image capturing mode among corresponding camera menus.

[0007] Once an image-capturing mode is selected, a preview screen display is displayed on a screen display. The user adjusts a direction of the portable terminal and its capture angle while checking an object to be taken (e.g., person, scenery, objects, etc.) on the preview screen display by using a zoom-function, and the like. After the size of an image to be captured and the capture angle are adjusted, the user presses a capture button, thereby automatically focusing via an Auto Focus (AF) function, thus to perform the image capture operation.

[0008] Various attempts have been made to easily and conveniently implement complicated functions in such portable terminals by means of hardware or software. For instance, a display unit is, for a user's convenience, implemented as a touch screen, a portion of a keypad is provided with a touch pad, or a user interface environment is provided in a portable terminal to enable a user to conveniently search for or select among available functions.

[0009] Accordingly, there is a need to develop a variety of tools that conform to the new attempts by means of hardware or software.

SUMMARY OF THE INVENTION

[0010] Therefore, an object of the present invention is to provide a portable terminal that can automatically perform a touch sensing based image capture operation.

[0011] Another object of the present invention is to provide an image capture method for a portable terminal that can set and execute a variety of capture functions according to a touch input.

[0012] To achieve these and other advantages and in accordance with the purpose of the present invention, as embodied and broadly described herein, there is provided a touch sensing based image capture method according to the present invention, including: displaying a preview image of an object to be captured on a touch screen; recognizing a touch input for the preview image; setting an image capture function based on the recognized touch input; and automatically performing an image capture operation according to the set capture function.

[0013] To achieve these and other advantages and in accordance with the purpose of the present invention, as embodied and broadly described herein, there is provided a portable terminal, including: a touch screen for displaying a preview image of an object to be captured; and a controller for displaying an image capture function based on a touched position, when a touch for the displayed preview image is inputted, and performing an image capture operation according to the corresponding capture function.

[0014] The image capture function may include a setting, change and execution for a focus area, exposure, illumination, lightness, zoom-in/zoom-out, and color change.

[0015] The touch input can be one of a short touch, a long touch, a multi-position touch, and a touch & drag.

[0016] The focus area is configured to set by a touch and to delete by a double-touch.

[0017] The focus area is set in the form of dots or closed curves, and can be moved or changed by dragging. In addition, the set focus area is visually displayed on the preview screen display or audibly outputted.

[0018] If one or more displayed focus areas are provided, a continuous image capture operation is performed according to the number of selected focus areas.

[0019] The foregoing and other objects, features, aspects and advantages of the present invention will become more apparent from the following detailed description of the present invention when taken in conjunction with the accompanying drawings.

BRIEF DESCRIPTION OF THE DRAWINGS

[0020] The above and other aspects, features, and advantages of the present invention will become more apparent upon consideration of the following description of preferred embodiments, taken in conjunction with the accompanying drawing figures.

[0021] In the drawings:

[0022] FIG. **1** is a schematic block diagram of a portable terminal according to one embodiment of the present invention;

[0023] FIG. **2** is a front perspective view showing an exemplary portable terminal according to one embodiment of the present invention;

[0024] FIG. **3** is a rear view showing the portable terminal according to one embodiment of the present invention;

[0025] FIG. **4** is a block diagram of a radio (wireless) communication system in which a portable terminal can be operated according to one embodiment of the present invention;

[0026] FIG. **5** is a diagram showing an example of selecting a focus by using a touch on a preview screen display according to the present invention;

[0027] FIG. **6** is a diagram showing an example of capturing an object by adjusting a depth of field according to the present invention;

[0028] FIG. **7** is a diagram showing an example of selecting a multi-position focus by using a touch on the preview screen display according to the present invention;

[0029] FIG. **8** is a flowchart showing a first exemplary touch sensing based image capture method according to one embodiment of the present invention;

[0030] FIG. **9** is a diagram showing an example of setting a focus area by drawing a figure with a finger according to the present invention;

[0031] FIG. **10** is a flowchart showing an example of performing an automatic capture operation according to a touch type in the present invention;

[0032] FIG. **11** is a flowchart showing a second exemplary touch sensing based image capture method according to one embodiment of the present invention; and

[0033] FIG. **12** is a diagram showing an indication on a screen display indicating that a touched object or area is selected according to the present invention.

DETAILED DESCRIPTION OF THE INVENTION

[0034] In the following detailed description, reference is made to the accompanying drawing figures which form a part hereof, and which show by way of illustration specific embodiments of the invention. It is to be understood by those of ordinary skill in this technological field that other embodiments may be utilized, and structural, electrical, as well as procedural changes may be made without departing from the scope of the present invention. Wherever possible, the same reference numerals will be used throughout the drawings to refer to the same or similar parts.

[0035] FIG. **1** is a schematic block diagram of a portable terminal according to one embodiment of the present invention.

[0036] The portable terminal may be implemented in various forms. Examples of such terminals include mobile phones, user equipment, smart phones, notebook computers, digital broadcast receiver terminals, personal digital assistants (PDA), portable multimedia players (PMP) and mobile navigation units.

[0037] Referring to FIG. **1**, the portable terminal **100** may include a wireless communication unit **110**, an A/V (Audio/Video) input unit **120**, a user input unit (or manipulation unit) **130**, a sensing unit **140**, an output unit **150**, a memory **160**, an interface unit **170**, a controller **180**, and a power supply unit **190**, and the like. FIG. **1** shows the portable terminal **100** having various components, but it is to be understood that implementing all of the illustrated components is not a requirement. A greater or fewer number of components may alternatively be implemented.

[0038] Hereinafter, the components of the portable terminal will be described in more detail.

[0039] The wireless communication unit **110** typically includes one or more components allowing radio (wireless) communication between the portable terminal **100** and a wireless communication system or a network within which the portable terminal is located. For instance, the wireless communication unit **110** may include a broadcast receiver module **111**, a mobile communication module **112**, a wireless Internet module **113**, a short-range communication module **114**, a position-location module **115**, and the like.

[0040] The broadcast receiver module **111** receives a broadcast signal and/or broadcast associated information from an external broadcast managing server via a broadcast channel. The broadcast channel may include a satellite channel and a terrestrial channel. The broadcast managing server may refer to a server that generates and transmits a broadcast signal and/or broadcast associated information or a server that receives a previously generated broadcast signal and/or broadcast associated information and transmits the same to a terminal. Examples of the broadcast associated information may include information regarding a broadcast channel, a broadcast program, a broadcast service provider, etc. The broadcast signal may be implemented as a TV broadcast signal, a radio broadcast signal, and a data broadcast signal, among others. If desired, the broadcast signal may further include a broadcast signal combined with a TV or radio broadcast signal.

[0041] The broadcast associated information may be provided also via a mobile communication network and, in this case, the mobile communication module **112** may receive the broadcast associated information.

[0042] The broadcast associated information may exist in various forms. For example, it may exist in the form of an electronic program guide (EPG) of digital multimedia broadcasting (DMB), an electronic service guide (ESG) of digital video broadcast-handheld (DVB-H), and the like.

[0043] The broadcast receiver module **111** may be configured to receive broadcast signals using various types of broadcast systems. In particular, the broadcast receiver module **111** may receive a digital broadcast signal using a digital broadcast system, such as Digital Multimedia Broadcasting-Terrestrial (DMB-T), Digital Multimedia Broadcasting-Satellite (DMB-S), Digital Video Broadcast-Handheld (DVB-H), the data broadcasting system known as media forward link only (MediaFLO®), Integrated Services Digital Broadcast-Terrestrial (ISDB-T), and the like. The broadcast receiver module **111** is configured to be suitable for every broadcast system that provides a broadcast signal as well as the above-mentioned digital broadcast systems.

[0044] A broadcast signal and/or broadcast-associated information received via the broadcast receiver module **111** may be stored in the memory **160**.

[0045] The mobile communication module **112** transmits/receives radio signals to/from at least one of a base station, an external terminal and a server in a mobile communication network. Such radio signals may include a voice call signal, a video call signal or various types of data according to text/multimedia message transmission/reception.

[0046] The wireless Internet module **113** supports Internet access for the mobile terminal. This module **113** may be internally or externally coupled to the terminal.

[0047] The short-range communication module **114** refers to a module for supporting short-range communications. Some examples of short-range communication technology include Bluetooth™, Radio Frequency Identification (RFID), Infrared Data Association (IrDA), Ultra-WideBand (UWB), ZigBee™, and the like.

[0048] The position-location module **115** identifies or otherwise obtains the location of the portable terminal. If desired, this module may be implemented using Global Positioning System (GPS) components that receive location information from a plurality of artificial satellites. Here, the location information may include coordinate information represented by the latitude and longitude. For instance, the

GPS module may accurately calculate a current location of the terminal by trigonometric measurement that measures accurate time and distance from three or more satellites and uses 3 different distance values. The GPS module may use a method that obtains time and distance information from 3 satellites and corrects an error with one satellite. In particular, the GPS module may obtain the location of the latitude, longitude and altitude from the location information received from the satellites, as well as accurate time information along with 3-dimensional velocity (speed) information.

[0049] The A/V input unit **120** is configured to input an audio or video signal. The A/V input unit **120** may include a camera **121** and a microphone **122**. The camera **121** processes image frames of still pictures or videos obtained by an image capture device in a video call mode or an image-capturing mode. The processed image frames may be displayed on a display module **151** of the output unit **150**.

[0050] The image frames processed by the camera **121** may be stored in the memory **160** or transmitted via the wireless communication unit **110**. Two or more cameras **121** may be provided according to the configuration of the mobile terminal.

[0051] The microphone **122** may receive an external analog audio signal (audible sound) via a microphone (or the like) in a phone call mode, a recording mode, a voice recognition mode, etc., and process it into digital data. The processed audio (voice) data may be converted for output into a format transmittable to a mobile communication base station via the mobile communication module **112** in case of the phone call mode. The microphone **122** may include various types of noise canceling (or suppression) algorithms to cancel (or suppress) noise generated in the course of receiving and transmitting audio signals.

[0052] The user input unit **130** may generate key input data inputted by a user to control various operations of the mobile terminal. The user input unit **130** may include a keypad, a dome switch, a touch pad (e.g., a touch sensitive member that detects changes in resistance, pressure, capacitance, etc.), a jog wheel, a jog switch, and the like. In particular, when a touch pad is overlaid on the display module **151** in a layered manner, it may be referred to as a touch screen.

[0053] The sensing unit **140** detects a current status (or state) of the portable terminal **100** such as an opened/closed state of the portable terminal **100**, a location of the portable terminal **100**, a presence or absence of user contact with the portable terminal **100**, etc., and generates commands or signals for controlling the operation of the portable terminal **100**. For example, when the portable terminal **100** is a slide type portable phone, the sensing unit **140** may sense whether the slide phone is opened or closed. In addition, the sensing unit **140** can detect whether or not the power supply unit **190** supplies power or whether or not the interface unit **170** is coupled with an external device.

[0054] The interface unit **170** serves as an interface with at least one external device connected with the portable terminal **100**. For example, the external devices may include wired/wireless headset ports, external power charger ports, wired/wireless data ports, memory card ports, ports for coupling equipment having an identity module, audio input/output (I/O) ports, video I/O ports, earphone ports, among others.

[0055] Here, the identity module refers to a chip which stores a variety of information to authenticate use authority of the portable terminal **100**, and may include User Identity Module (UIM) cards, Subscriber Identity Module (SIM) cards, Universal Subscriber Identity Module (USIM) cards, and the like. In addition, the equipment having the identity module (hereinafter, referred to as the 'identity device') may be implemented in the form of a smart card. Accordingly, the identity device can be connected to the terminal **100** via the port. The interface unit **170** may be used to receive inputs (e.g., data, information, power, etc.) from an external device and transfer the received inputs to one or more elements within the portable terminal **100** or may be used to transfer data from the portable terminal to an external device.

[0056] The output unit **150** is configured to provide outputs in a visual, audible, and/or tactile manner (e.g., audio signal, video signal, alarm signal, etc.). The output unit **150** may include the display module **151**, an audio output module **152**, an alarm output module **153**, and the like.

[0057] The display module **151** may output information processed in the portable terminal **100**. For example, when the portable terminal **100** is in the phone call mode, the display module **151** may display a User Interface (UI) or a Graphic User Interface (GUI) associated with a call or other communication on a screen display thereof. When the portable terminal **100** is in the video call mode or the image capturing mode, the display module **151** may display a captured and/or received image, a UI, a GUI, and the like on its screen display.

[0058] Meanwhile, when the display module **151** and the touch pad are overlaid in a layered manner to form a touch screen, the display module **151** may function as both an input device and an output device. The display module **151** may include at least one of a Liquid Crystal Display (LCD) panel, a Thin Film Transistor-LCD (TFT-LCD) panel, an Organic Light Emitting Diode (OLED) display, a flexible display screen, a three-dimensional (3D) display screen, or the like. The portable terminal **100** may include two or more display modules (or other display means) **151** according to its desired implementation. For example, the portable terminal **100** may include an external display unit (not shown) and an internal display unit (not shown).

[0059] The audio output module **152** may output audio data received from the wireless communication unit **110** or stored in the memory **160** in a call signal reception mode, a call mode, a recording mode, a voice recognition mode, a broadcast reception mode, and the like. Also, the audio output module **152** may provide audible outputs related to a particular function (e.g., a call signal reception sound, a message reception sound, etc.) performed by the portable terminal **100**. The audio output module **152** may include a speaker, a buzzer, or the like.

[0060] The alarm output module **153** may provide outputs to inform about the occurrence of an event of the portable terminal **100**. Typical events may include a call signal reception, a message reception, a key signal input, and the like. In addition to audio or video outputs, the alarm output module **153** may provide outputs in a different manner to inform about the occurrence of an event. For example, the alarm output module **153** may provide outputs in the form of vibrations (or other tactile means). When a call signal, a message, or some other incoming communication is received, the alarm output module **153** may provide tactile outputs (i.e., vibrations) to inform the user. By providing tactile outputs, the user can recognize the occurrence of various events. Outputs informing about the occurrence of an event may be also provided via the display module **151** or the audio output module **152**.

[0061] The memory **160** may store software programs or the like used for the processing and controlling performed by the controller **180**, or may temporarily store inputted/outputted data (e.g., a phonebook, messages, still images, video, etc.).

[0062] The memory **160** may include at least one type of storage medium including a flash memory type, a hard disk type, a multimedia card micro type, a card-type memory (e.g., SD or XD memory, etc.), a Random Access Memory (RAM), a Static Random Access Memory (SRAM), a Read-Only Memory (ROM), an Electrically Erasable Programmable Read-Only Memory (EEPROM), a Programmable Read-Only memory (PROM) magnetic memory, a magnetic disk, an optical disk, and the like. Also, the portable terminal **100** may cooperate with a web storage device on the Internet that remotely performs the storage function of the memory **160**.

[0063] The controller **180** typically controls the general operations of the portable terminal. For example, the controller **180** performs controlling and processing associated with voice calls, data communications, video calls, and the like. In addition, the controller **180** may include a multimedia module **181** for reproducing multimedia data. The multimedia module **181** may be implemented integrally within the controller **180** or by software executed therein, or may be configured separately from the controller **180**.

[0064] The power supply unit **190** receives external or internal power and supplies power required for the operations of the respective elements under the control of the controller **180**.

[0065] Various functionalities described herein may be implemented in a computer-readable medium using, for example, computer software, hardware, or any combination thereof.

[0066] For a hardware implementation, the functionalities described herein may be implemented by using at least one of application specific integrated circuits (ASICs), digital signal processors (DSPs), digital signal processing devices (DSPDs), programmable logic devices (PLDs), field programmable gate arrays (FPGAs), processors, controllers, micro-controllers, microprocessors, and electronic units designed to perform the functions described herein. In some cases, the controller **180** may implement such functionalities.

[0067] For a software implementation, the functionalities such as operation procedures or functions may be implemented together with separate software modules that allow performing of at least one function or operation. Software codes can be implemented by a software application written in any suitable programming language. The software codes may be stored in the memory **160** and executed by the controller **180**.

[0068] So far, the portable terminal has been described from the perspective of its functions. Hereinafter, external elements of the portable terminal will be described from the perspective of their functions with reference to FIGS. **2** and **3**. The portable terminal may be implemented in a variety of different configurations. Examples of such configurations include a folder-type, a bar-type, a swing-type, a slide type and combinations thereof. For clarity, further description will primarily relate to a slide-type portable terminal. However, such teachings apply equally to other types of portable terminals.

[0069] FIG. **2** is a front perspective view of a portable terminal according to the present invention.

[0070] The slide-type portable terminal according to the present invention includes a first body **200** and a second body **205** disposed to be slidably movable along at least one direction relative to one another. And, in case of the folder-type portable terminal, the portable terminal according to the present invention may include a first body and a second body configured to have at least one side thereof to be folded or unfolded by the first body.

[0071] A state in which the first body **200** is disposed to overlap with or overlie the second body **205** may be called a "closed configuration," and as shown in the drawing, a state in which the first body **200** and second body **205** are so disposed relative one another as to expose at least a portion of the second body **205** may be called an "opened configuration." In the closed configuration, the portable terminal mainly operates in a standby mode (idle mode), and the standby mode may be released according to a user manipulation. The portable terminal operates mainly in the calling mode or the like in the opened configuration, and it can be changed to the standby mode with the lapse of a certain time period or a user manipulation.

[0072] The case (a casing, a housing, a cover, etc.) constituting the external appearance of the first body **200** is formed by a first front case **220** and a first rear case **225**. Various electronic components are installed in a space between the first front case **220** and the first rear case **225**. One or more intermediate cases may be additionally disposed between the first front case **220** and the first rear case **225**.

[0073] The cases may be formed by injection-molding a synthetic resin or may be made of a metallic material such as stainless steel (STS) or titanium (Ti), and the like.

[0074] The display module **151**, an audio output module **152**, a camera module **121** or a first user input unit **210** may be located on the first body **200**, specifically, on the first front case **220** of the first body **200**.

[0075] The display module **151** may include an LCD (Liquid Crystal Display), an OLED (Organic Light Emitting Diode) display, a transparent OLED, etc. that visually displays information.

[0076] A touch pad may be overlaid in a layered manner on the screen of the display module **151** to allow the display module **151** to function as a touch screen to enable the inputting of information by a user's touch.

[0077] The audio output module **152** may be implemented in the form of a speaker.

[0078] The camera module **121** may be implemented to be suitable for capturing images or video with respect to the user and so on.

[0079] Similar to the first body **200**, the case constituting the external appearance of the second body **205** is formed by a second front case **230** and a second rear case **235**.

[0080] A second user input unit **215** may be disposed on a front face of the second body **205**, specifically, on the second front case **230**. A third user input unit **245**, the microphone **122**, and the interface unit **170** may be disposed on at least one of the second front case **230** and the second rear case **235**.

[0081] The first to third user input units **210**, **215** and **245** may be generally referred to as the manipulation unit **130**, and various techniques can be employed for implementing the manipulation unit so long as they can be operated by a user in a tactile manner.

[0082] For example, the user input units can be implemented with a dome switch or touch pad that can receive user commands or information according to a user's pressing,

pushing or touching, or implemented in the form of a wheel that rotates a key, a jog element, a joystick, or the like.

[0083] In terms of their functions, the first user input unit **210** is used for inputting commands such as start, end, scroll or the like, and the second user input unit **215** is used for inputting numbers, characters, symbols, or the like.

[0084] Also, the third user input unit **245** may operate as a hot key for activating a particular function within the portable terminal.

[0085] The microphone **122** may be implemented in a form suitable to transduce the voice of a user, other sounds, or the like.

[0086] The interface unit **170** may be used as a link (passage or path) through which the portable terminal can exchange data or the like with an external device. For example, the interface unit **170** may be implemented as at least one of a connection port for connecting an earphone to the portable terminal via a wired (fixed) or wireless means, a port for short-range communications (e.g., an Infrared Data Association (IrDA) port, a Bluetooth™ port, a wireless LAN port, etc.), power supply ports for providing power to the portable terminal, or the like.

[0087] The interface unit **170** may be configured using a card socket (e.g., for coupling to an external card including a subscriber identity module (SIM) card, a user identity module (UIM) card, and a memory card for information storage.

[0088] The power supply unit **190** for supplying power to the portable terminal is located at a side portion of the second rear case **235**.

[0089] The power supply unit **190** may be, for example, a rechargeable battery that can be detached.

[0090] FIG. **3** is a rear view showing the portable terminal in FIG. **2**.

[0091] Referring to FIG. **3**, a camera module **121** may additionally be disposed on a rear surface of the second rear case **235** of the second body **205**. The camera module **121** of the second body **205** may have an image capture direction which is substantially the opposite to that of the camera module **121** of the first body **200**, and may support a different resolution, image size, or number of pixels as compared to the camera module **121** of the first body **200**.

[0092] For instance, the camera module **121** of the first body **200** may operate with a relatively lower resolution to capture images of a user's face and transmit the same to the other party during video call communication or the like, while the camera module **121** of the second body **205** may operate with a relatively higher resolution to capture images of general subjects with high picture quality not for immediately being transmitted but for later use or for communicating to others.

[0093] A flash lamp **250** and a mirror **255** may be additionally disposed adjacent to the camera module **121** of the second body **205**. When an image of a subject is to be captured with the camera module **121** of the second body **205**, the flash lamp **250** illuminates the subject. The mirror **255** allows a user to see himself when they want to capture their own image (self-image capture) by using the camera module **121** of the second body **205**.

[0094] The second rear case **235** may further include an audio output module **152**.

[0095] The audio output module **152** of the second body **205** may implement a stereophonic sound function in conjunction with the audio output module **152** of the first body **200** and may be also used for sending and receiving audio calls in a speaker phone mode.

[0096] A broadcast signal receiving antenna **260** may be disposed at one side or region of the second rear case **235**, in addition to an antenna that supports mobile communications. The antenna **260** can be configured to be retractable from the second body **205**.

[0097] One part of a slide module **265** that slidably combines the first body **200** and the second body **205** may be disposed on the first rear case **225** of the first body **200**.

[0098] The other part of the slide module **265** may be disposed on the second front case **230** of the second body **205**, which may not be exposed as shown in the drawing.

[0099] In the above description, the camera module **121** and so on is disposed on the second body **205**, but such a described configuration is not meant to be limiting.

[0100] For instance, one or more of the elements (e.g., **260**, **121** and **250** and **152**), which are disposed on the second rear case **235** in the above description, may be mounted on the first body **200**, mainly, on the first rear case **225**. In this case, those elements disposed on the first rear case **225** can be protected (or covered) by the second body **205** in the closed configuration. In addition, even if the camera module **121** of the second body is not provided, the camera module **121** of the first body may be configured to rotate (or otherwise be moved) to thus allow image capturing in various directions.

[0101] The portable terminal **100** as shown in FIGS. **1** through **3** may be configured to operate within a communication system which transmits data via frames or packets, including both wireless and wired communication systems, and satellite-based communication systems.

[0102] Hereinafter, referring to FIG. **4**, description of the communication system in which the portable terminal can be operated according to the present invention will be given in detail.

[0103] Such communication systems utilize different air interfaces and/or physical layers. Examples of such air interfaces utilized by the communication systems include example, Frequency Division Multiple Access (FDMA), Time Division Multiple Access (TDMA), Code Division Multiple Access (CDMA), and Universal Mobile Telecommunications System (UMTS), the Long Term Evolution (LTE) of the UMTS, and the Global System for Mobile communications (GSM). By way of non-limiting example only, further description will relate to a CDMA communication system, but such teachings apply equally to other system types.

[0104] Referring now to FIG. **4**, a CDMA wireless communication system is shown having a plurality of portable terminals **100**, a plurality of base stations **270**, Base Station Controllers (BSCs) **275**, and a Mobile Switching Center (MSC) **280**. The MSC **280** is configured to interface with a conventional Public Switch Telephone Network (PSTN) **290**. The MSC **280** is also configured to interface with the BSCs **275**. The BSCs **275** are coupled to the base stations **270** via backhaul lines. The backhaul lines may be configured in accordance with at least one of several known interfaces including, for example, E1/T1, ATM, IP, PPP, Frame Relay, HDSL, ADSL, or xDSL. It is to be understood that the system as shown in FIG. **4** may include a plurality of BSCs **275**.

[0105] Each base station **270** may include one or more sectors, each sector having an omni-directional antenna or an antenna pointed in a particular direction radially away from the base station **270**. Alternatively, each sector may include

two or more antennas for diversity reception. Each base station **270** may be configured to support a plurality of frequency assignments, with each frequency assignment having a particular spectrum (e.g., 1.25 MHz, 5 MHz).

[0106] The intersection of a sector and frequency assignment may be referred to as a CDMA channel. The base stations **270** may also be referred to as Base Station Transceiver Subsystems (BTSs). In some cases, the term "base station" may be used to refer collectively to a BSC **275**, and one or more base stations **270**. The base stations may also be denoted "cell sites." Alternatively, individual sectors of a given base station **270** may be referred to as cell sites.

[0107] As shown in FIG. **4**, a Broadcasting Transmitter (BT) **295** is shown broadcasting to portable terminals **100** operating within the system. The broadcast receiver module **111** as shown in FIG. **1** is typically configured to receive broadcast signals transmitted by the BT **295**.

[0108] In addition, FIG. **4** depicts several Global Positioning System (GPS) satellites **300**. Such satellites facilitate locating the position of some or all of the portable terminals **100**. Two satellites are depicted, but it is understood that useful positioning information may be obtained with greater or fewer satellites. The GPS module **115** (FIG. **1**) is typically configured to cooperate with the satellites **300** to obtain desired position information. It is to be understood that other types of position detection technology, (i.e., location technology that may be used in addition to or instead of GPS location technology) may alternatively be implemented. If desired, at least one of GPS satellites **300** may alternatively or additionally be configured to provide satellite DMB transmissions.

[0109] During typical operation of the wireless communication system, the Base Stations **270** receive sets of reverse-link signals from various portable terminals **100**. The portable terminals **100** are engaging in calls, messaging, and other communications. Each reverse-link signal received by a given base station **270** is processed within that base station.

[0110] The resulting data is forwarded to an associated BSC **275**. The BSC **275** provides call resource allocation and mobility management functionality including the orchestration of soft handoffs between base stations **270**. The BSCs **275** also route the received data to the MSC **280**, which provides additional routing services for interfacing with the PSTN **290**. Similarly, the PSTN **290** interfaces with the MSC **280**, and the MSC **280** interfaces with the BSCs **275**, which in turn control the base stations **270** to transmit sets of forward-link signals to the portable terminals **100**.

[0111] Description of the method for setting a variety of camera functions through a touch input and automatically performing an image capture operation in the above-configured portable terminal will be given in detail.

[0112] As shown in FIG. **1**, the display module **151** according to one embodiment of the present invention is configured to display information processed in the portable terminal under the control of the controller **180**. For example, when the portable terminal is in the phone call mode, the display module **151** may display a User Interface (UI) or a Graphic User Interface (GUI) associated with a call or other communication on a screen display thereof. When the portable terminal is in the video call mode or the image capturing mode, the display module **151** may display a preview image of an object to be captured by the camera **121** and then displays an image captured by the camera **121**, a UI, a GUI, and the like on its screen display.

[0113] Also, the audio output module **152** may provide audible outputs related to a particular function (e.g., a call signal reception sound, a message reception sound, etc.) performed by the portable terminal **100**, as well as a variety of sound effects related to image capture of the camera **121** according to the present invention.

[0114] The memory **160** may store software programs or the like used for the general operations of the portable terminal, and the processing and controlling performed by the controller **180**, or may temporarily store inputted/outputted data (e.g., a phonebook, messages, captured still images, video, etc.). In addition, the memory **160** may store a software program used for controlling a touch sensing based image capture operation according to the present invention.

[0115] Further, the controller **180** according to one embodiment of the present invention as shown in FIG. **1** may control overall image capture operations of the portable terminal by recognizing the touch input as a certain signal input. That is, the controller **180** senses the touch input by a user's touch on the touch screen, sets an image capture function based on the sensed touch input, and then controls the camera according to the set capture function, thereby automatically performing the image capture operation. Also, the controller **180** controls the display module **151** so as to display a variety of information necessary to perform the image capture operation. Preferably, the image capture function may include at least one of a focus area, exposure, illumination, lightness, zoom-in/zoom-out, color change and a continuous image capture operation.

[0116] Hereinafter, the touch sensing based image capture method in the above-described portable terminal according to the present invention will be described in detail.

[0117] In the configuration of the portable terminal as shown in FIG. **1**, the touch sensing based image capture is mainly performed by the A/V input unit **120**, the display module **151**, the memory **160**, the audio output module **152** and the controller **180**. Additionally, the wireless communication unit **110** may be used if a captured image is to be processed and transmitted. In addition, the user input unit **130** and the like may also be used according to the modification of the examples. Accordingly, the A/V input unit **120**, the display module **151**, the memory **160**, the audio output module **152** and the controller **180** may be generally referred to as a "touch sensing based image capture device."

[0118] First, in order to implement the touch sensing based image capture according to the present invention, the types and functions of a touch will be defined as below:

[0119] 1. Touch types

- **[0120]** a short touch;
- **[0121]** a long touch;
- **[0122]** a double-touch;
- **[0123]** a multi-position touch; and
- **[0124]** a touch & drag

[0125] In the present invention, the short and long touches are generally configured to perform the image capture operation. As shown in FIG. **5**, a focus is generated on all touched positions after being touched. Here, the time for the long touch would be enough so long as it takes as much as a time taken to press a key to switch a voice mode into a manner mode in the portable terminal.

[0126] Differences of each touch are described as follows. If the long touch is performed, a separate menu window is displayed, without immediately displaying a focus on the touched position and automatically performing the image

capture operation, such that the user enables to select object recognition (e.g., face recognition), area recognition, depth of field adjustment, a focus shape and the like.

[0127] The object recognition refers to correctly focusing an object of a touched position, i.e., on a face by performing an Auto Focus (AF). The area recognition refers to focusing area coverage of the touched position (e.g., a circle or rectangle) by performing the AF. In addition, the depth of field as shown in FIG. **6** refers to applying a depth-of-field effect to the object or area of the touched position, such that a background of a main object to be captured appears to be blurred while the object to be captured appears sharp (clear), or the background of the object appears to be sharp. For instance, if flowers, insects, models or the like are to be captured, the background thereof should be captured blurred, thus to make the object appear sharp.

[0128] The Auto Focus (AF) refers to a function which the camera **121** automatically focuses on an object to be captured, and enables the user to more easily and conveniently obtain a focus than a Manual Focus (MF), requiring the user to check the object to be captured via a view finder or a Liquid Crystal Display (LCD) monitor and to manually adjust the focus.

[0129] The double-touch is a touch used to remove the focus generated by the short and long touches. As shown in FIG. **7**, the multi-position touch refers to setting one or more focus areas **51** by allowing the user to touch several positions of the object to be captured. The multi-position touch on the preview screen display indicates a multi-shot for continuously capturing each of the touched positions.

[0130] The touch & drag is used for setting the focus area in the form of closed curves (e.g., a circle, an ellipse, a polygon, etc.). A specific effect (e.g., using a predetermined color, flashing, etc.) may be displayed on the focus area generated by the touch & drag.

[0131] Accordingly, the present invention may set a certain image capture function based on the number of touches and time thereof, and also set the image capture function for a certain area of the preview image.

[0132] 2. Functions of a touch

[0133] generating/deleting a focus;

[0134] setting a focus area; and

[0135] capture (general, continuous)

[0136] As described above, the user's touch on the preview screen display of the touch screen is to simultaneously perform the selection of the focus area as well as the image capture operation. Performing the short, long, multi-position touches and touch & drag generates the focus. The generated focus is deleted by performing the double-touch. Here, there is a difference of generating the focus among the short, long, multi-position touches and touch & drag: the short touch displays a focus having a predetermined size and shape, while the long touch, the multi-position touch (including the long touch) and the touch & drag generate a focus according to the size and shape based on the user's input.

[0137] In addition, in the present invention, the general capture and the continuous capture are distinguished from each other by the number of touches. That is, one-time touch, such as the short touch and the long touch, refers to the general image capture. Two or more touches, such as the multi-position touch, refer to the continuous image capture that continuously captures a touched position.

[0138] Hereinafter, description of the touch sensing based image capture method according to the present invention will be given in more detail based on the types and functions of the touch.

[0139] FIG. **8** is a flowchart showing a first exemplary touch sensing based image capture method according to one embodiment of the present invention.

[0140] As shown in FIG. **8**, the first embodiment of the present invention describes an example that the touch input is recognized as the focus area setting which can be one of the image capture functions and an image capture command. Preferably, the image capture function may include a setting, change and execution for a focus area, exposure, illumination, lightness, zoom-in/zoom-out, color change and the continuous capture (shooting).

[0141] If the user selects an image-capturing mode in the camera mode, the controller **180** performs a control of the display module **151** such that a preview image of an object to be captured, sensed by an image sensor (not shown), can be displayed on the touch screen (S**10**). Here, the user may perform operations required until before performing a final capture operation (e.g., perform a zoom function (zoom-in/zoom-out) by using a certain key disposed in the user input unit **130** or adjust a camera angle). In addition, the user may automatically adjust the zoom function and other required operations by the touch input, not by a key input.

[0142] When the preview image is displayed, the user selects the focus area by touching a point of the touch screen with his finger, or sets the focus area by drawing a circle with his finger as shown in FIG. **9**.

[0143] Accordingly, the controller **180** determines the touch type based on the user's touch input sensed by the sensing unit **140** and sets an image capture function corresponding to the determined touch input (S**13**), then automatically performs the image capture operation according to the set capture function, i.e., by focusing the touched position (i.e., focus area) by performing the AF function (S**14**). Here, the set function is displayed on the preview screen display visually or audibly.

[0144] FIG. **10** shows an example of performing the automatic image capture operation by sensing the touch input.

[0145] As shown in FIG. **10**, the controller **180** may determine the type of touch by the user's input according to the sensing result of the sensing unit **140** (S**20**, S**21**), and performs the image capture operation by distinguishing the general image capture (or manual or automatic capture) and the continuous image capture according to the determined type of the touch.

[0146] If the sensed touch input is the short touch indicating the general image capture, the controller **180** performs a control of the display module **151** so as to generate a focus on the touched position, and then performs a control of the camera **121** so as to automatically perform the image capture operation (S**24**). Here, in a case of the short touch, the recognition technique (object or area), the depth of field adjustment, the focus shape, etc., which are set as a default setting, may be displayed or initially set from the menu by the user.

[0147] If the sensed touch input is the long touch indicating the general image capture, the controller **180** displays a separate menu window on the touch screen such that the user may select an option including the object recognition (e.g., face recognition), the area recognition, the depth of field adjustment, the focus shape, and the like (S**22**).

[0148] If an option desired by the user is selected from the menu window (S**23**), the controller **180** performs a control such that the focus with the selected shape and size is displayed on the preview screen display, and then automatically performs the image capture operation (S**24**). Here, an indication (color, thickness of a line, flashing) on the screen display informing that the touched object or area has been selected is displayed on the preview screen display.

[0149] However, if the sensed touch input is the multi-position touch indicating the continuous image capture, instead of the short and long touches, the controller **180** determines a touched position and continuously performs a multi-shot capture by combining the short touch and the long touch as described in FIG. **10**.

[0150] In addition, when a focus is displayed on a specific position, if the specific position is touched again (double-touch), the controller **180** is configured to delete the focus displayed on the corresponding position. Further, in the state that the focus is displayed on the specific position, if the corresponding focus is dragged in the shape of a straight line, the controller **180** is configured to move the displayed focus to a direction being dragged.

[0151] The first embodiment of the present invention automatically performs the focus area setting, as one of the image capture functions, and the image capture operation by one touch on the preview screen display, thereby enabling the user to conveniently perform the image capture operation at the desired focus.

[0152] FIG. **11** is a flowchart showing a second exemplary touch sensing based image capture method according to one embodiment of the present invention. As shown in FIG. **11**, the second embodiment of the present invention shows an example of inputting a separate image capture command after selecting the focus area.

[0153] In the first embodiment of the present invention, the AF for the area set by the user is done within a short period of time during which the image capture is actually being performed after the touch input. Accordingly, in the first embodiment, various modifications (changes) in the already selected focus or other camera functions may be difficult.

[0154] Therefore, in the second embodiment, the focus area selection (or setting) and the image capture are separately inputted, thus to smoothly perform the setting/changing of the focus or other camera functions. And, the second embodiment has the same detailed operations for the focus area selection as the first embodiment.

[0155] That is, the controller **180** recognizes the type of the touch inputted by the user, sets an image capture function according to the corresponding touch input, and then displays it on the preview screen display (S**30**~S**32**). Here, if there is the long touch indicating the general image capture, the controller **180**, as shown in FIG. **10**, displays the separate window on the display module **151** such that the user can select the object recognition (e.g., face recognition), the area recognition, the depth of field adjustment, the focus shape and the like.

[0156] And, while the focus is displayed, the user may move the corresponding focus by using his finger (dragging) or a direction key, and delete the displayed focus by the double-touch. In addition, the user may reduce or enlarge the size of the already displayed focus as well as change its shape by holding an edge of the focus to extend (drag) (S**33**).

[0157] If the setting of the focus is completed by using such various methods, the user may input the image capture command by using a user touch key provided on the touch screen or a specific key provided in the user input unit **130**. Accordingly, the controller **180** may control the camera based on the determined touch type (i.e., the image capture function set by the user according to the image capture command), thus to perform either the general image capture or the continuous image capture. The captured still image is stored in the memory **160** and is transmitted to the external device via the wireless communication unit **110** under the control of the controller **180**.

[0158] In the first and second embodiments of the present invention, the controller **180**, as shown in FIG. **12**, is configured to display on the display module **151** an indication on the screen display (a semi-transparent color, thickness of a line, flashing) representing that the touched object or area has been selected, as well as to apply an animation effect representing that the current image is to be captured as either the general image capture (i.e., automatic capture) or the continuous image capture (i.e., multi-shot capture). For instance, when the image is captured, a sound effect may be provided. In particular, in the continuous image capture, a variety of effects such as a clicking sound or vibration may be applied to each picture.

[0159] The present invention has mainly described the preferred embodiments in which the touch sensing based automatic image capture is applied to the portable terminal. However, without being limited to this, the present invention may be applied to any devices having the touch screen.

[0160] In addition, the portable terminal in the present invention may be implemented in a variety of different configurations, such as a folder-type, a bar-type, a swing-type, a slide type, a hinge-type, etc., so long as the portable touch screen is employed.

[0161] In addition, a medium for recording a program can be implemented as a code that can be read by a computer. The medium that can be read by a computer includes all types of recording devices for storing data such as a ROM, a RAM, a CD-ROM, a magnetic tape, a floppy disk, and an optical data storing device. The medium can be also implemented as a carrier wave (e.g., a data transmission through the Internet). The computer may include the controller **180** of the portable terminal.

[0162] The portable terminal according to the present invention is not limited to the configuration and method of the above-described embodiments, but may be variously modified by selectively combining the entirety or a portion of each embodiment.

[0163] As so far described, the present invention has an effect of conveniently performing an image capture operation in a device employing a touch screen, by setting a variety of functions required for an image capture through a touch input on a preview screen of the touch screen and by actually performing the image capture operation.

[0164] As the present invention may be embodied in several forms without departing from the spirit or essential characteristics thereof, it should also be understood that the above-described embodiments are not limited by any of the details of the foregoing description, unless otherwise specified, but rather should be construed broadly within its spirit and scope as defined in the appended claims, and therefore all changes and modifications that fall within the metes and bounds of the claims, or equivalence of such metes and bounds are therefore intended to be embraced by the appended claims.

What is claimed is:

1. A method of performing image capture in a portable terminal, the method comprising:

displaying a preview image of an object to be captured on a touch screen;

recognizing a touch input related to the preview image;

performing at least one image capture function according to the recognized touch input; and

capturing an image according to the at least one image capture function.

2. The method of claim **1**, further comprising displaying information related to the at least one image capture function.

3. The method of claim **1**, wherein the at least one image capture function comprises an operation related to a focus area, setting an exposure, setting an illumination, setting a zoom function, changing a color, or an operation related to continuous image capture.

4. The method of claim **1**, wherein the touch input is a short touch, a long touch, a multi-position touch, or a touch & drag.

5. The method of claim **1**, wherein the at least one image capture function is initiated in response to a single touch and terminated in response to a double-touch.

6. The method of claim **1**, wherein capturing the image is performed automatically.

7. The method of claim **1**, wherein capturing the image is performed manually.

8. A method of performing image capture in a portable terminal, the method comprising:

displaying a preview image of an object to be captured on a touch screen;

recognizing a touch input related to the preview image;

displaying at least one focus area on the touch screen where the touch input was recognized; and

capturing an image.

9. The method of claim **8**, wherein the touch input is a short touch, a long touch, a multi-position touch, or a touch & drag.

10. The method of claim **9**, further comprising no longer displaying the at least one focus area upon recognizing a double-touch input.

11. The method of claim **8**, wherein the at least one focus area has a form of dots or closed curves.

12. The method of claim **8**, further comprising moving the displayed at least one focus area upon recognizing a dragging touch input.

13. The method of claim **8**, wherein displaying the at least one focus area comprises visually displaying various colors on the preview image or generating an audible output.

14. The method of claim **8**, wherein a plurality of focus areas are displayed and capturing the image comprises performing a continuous image capture operation according to a selected at least one of the plurality of displayed focus areas.

15. The method of claim **8**, wherein capturing the image comprises:

determining a touch type; and

displaying the at least one focus area and automatically capturing the image if the determined touch is a short touch or displaying a capture effect selection menu window if the determined touch is a long touch.

16. The method of claim **15**, further comprising automatically capturing the image when a user selects at least one capture effect from the displayed capture effect selection menu.

17. The method of claim **16**, wherein the at least one selected capture effect comprises object recognition, area recognition, depth of field adjustment or a focus shape.

18. The method of claim **8**, wherein capturing the image is performed automatically.

19. The method of claim **8**, wherein capturing the image is performed manually.

20. A portable terminal, comprising:

a touch screen for displaying a preview image of an object to be captured; and

a controller for recognizing a touch input related to the preview image, performing at least one image capture function according to the recognized touch input and capturing an image according to the at least one image capture function.

21. The terminal of claim **20**, wherein the controller further displays information related to the at least one image capture function.

22. The terminal of claim **20**, wherein the at least one image capture function comprises an operation related to a focus area, setting an exposure, setting an illumination, setting a zoom function, changing a color, or an operation related to continuous image capture.

23. The terminal of claim **20**, wherein the touch input is a short touch, a long touch, a multi-position touch, or a touch & drag.

24. The terminal of claim **20**, wherein the controller initiates the at least one image capture function in response to a single touch and terminates the at least one image capture function in response to a double-touch.

25. The terminal of claim **20**, wherein the controller captures the image automatically.

26. The terminal of claim **20**, wherein the controller captures the image in response to recognizing a manual input.

27. A portable terminal, comprising:

a touch screen for displaying a preview image of an object to be captured; and

a controller for recognizing a touch input related to the preview image, displaying at least one focus area on the touch screen where the touch input was recognized and capturing an image.

28. The terminal of claim **27**, wherein the touch input is a short touch, a long touch, a multi-position touch, or a touch & drag.

29. The terminal of claim **28**, wherein the controller controls the touch screen to no longer display the at least one focus area upon recognizing a double-touch input.

30. The terminal of claim **27**, wherein the at least one focus area has a form of dots or closed curves.

31. The terminal of claim **27**, wherein the controller moves the displayed at least one focus area upon recognizing a dragging touch input.

32. The terminal of claim **27**, wherein the controller displays the at least one focus area by visually displaying various colors on the preview image or generating an audible output.

33. The terminal of claim **27**, wherein the controller displays a plurality of focus areas and captures the image by performing a continuous image capture operation according to a selected at least one of the plurality of displayed focus areas.

34. The terminal of claim **27**, wherein the controller captures the image by:

determining a touch type; and

displaying the at least one focus area and automatically capturing the image if the determined touch is a short touch or displaying a capture effect selection menu window if the determined touch is a long touch.

35. The terminal of claim **34**, wherein the controller automatically captures the image when a user selects at least one capture effect from the displayed capture effect selection menu.

36. The terminal of claim **35**, wherein the at least one selected capture effect comprises object recognition, area recognition, depth of field adjustment or a focus shape.

37. The terminal of claim **27**, wherein the controller automatically captures the image.

38. The terminal of claim **27**, wherein the controller captures the image in response to recognizing a manual input.

* * * * *