IN THE UNITED STATES DISTRICT COURT
FOR THE EASTERN DISTRICT OF TEXAS
MARSHALL DIVISION

ADAPTIVE SPECTRUM AND SIGNAL ALIGNMENT, INC., Plaintiff, v. AT&T ENTERPRISES, LLC. et al., Defendants.	CASE NO. 2:24-cv-00029-JRG-RSP (Lead Case)
ADAPTIVE SPECTRUM AND SIGNAL ALIGNMENT, INC., Plaintiff, v. CHARTER COMMUNICATIONS, INC. et al, Defendants.	CASE NO. 2:24-cv-00124-JRG-RSP (Member Case) **JURY TRIAL DEMANDED**

PLAINTIFF ADAPTIVE SPECTRUM AND SIGNAL ALIGNMENT, INC.'S FIRST AMENDED COMPLAINT FOR PATENT INFRINGEMENT

Plaintiff Adaptive Spectrum and Signal Alignment, Inc. ("ASSIA") files this First Amended Complaint for patent infringement against Defendants Charter Communications, Inc.; Charter Communications Operating, LLC; Charter Communications Holding Company, LLC; and Spectrum Management Holding Company, LLC (collectively, "Charter"), and alleges as follows:

NATURE OF THE ACTION

1. This is a civil action that arises under 35 U.S.C. § 271 from Defendants' infringement of ASSIA's U.S. Patent Nos. 7,809,996 ("the '996 patent"), 10,848,398 ("the '398

patent"), 11,050,654 ("the '654 patent"), 11,477,108 ("the '108 patent"), 11,770,313 (the "'313 patent) (collectively, "the Asserted Patents"). The '996 patent is attached as Exhibit 1; the '398 patent is attached as Exhibit 2; the '654 patent is attached as Exhibit 3; the '108 patent is attached as Exhibit 4, and the '313 patent is attached as Exhibit 5.

THE PARTIES

2. Plaintiff Adaptive Spectrum and Signal Alignment, Inc. is a California corporation with its office located at 303 Twin Dolphin Drive, Suite 600, Redwood City, California 94065.

3. Defendant Charter Communications, Inc. is a Delaware corporation having offices located at 400 Washington Boulevard, Stamford, Connecticut 06902. The other Charter Defendants are direct or indirect subsidiaries of Charter Communications, Inc., whose principal asset is a controlling equity interest in Charter Communications Holdings, LLC, an indirect owner of Charter Communications Operating, LLC. Charter Communications, Inc., together with its controlled subsidiaries, is a broadband connectivity company and cable operator that provides services to subscribers under the Spectrum brand.

4. Charter Communications, Inc. has a registered agent in Texas, Corporation Service Company d/b/a CSC - Lawyers Incorporating Service Company, located at 211 East 7th Street, Suite 620, Austin, Texas 78701.

5. Charter Communications Operating, LLC is a Delaware company having offices located at 12405 Powerscourt Drive, Saint Louis, Missouri 63131. "[S]ubstantially all of the operations" of Charter reside under Charter Communications Operating, LLC.[1]

6. Charter Communications Holding Company, LLC is a Delaware company having offices located at 12405 Powerscourt Drive, Saint Louis, Missouri 63131.

---

[1] *See* Charter Communications, Inc., *2022 Annual Report*, at F-8, available at https://ir.charter.com/static-files/e3d00dfc-b3d6-4cf6-bbd0-309423830907.

7. Spectrum Management Holding Company, LLC ("Spectrum") is a Delaware company having offices located at 12405 Powerscourt Drive, Saint Louis, Missouri 63131. Spectrum Management Holding Company, LLC provides management services for certain cable systems owned or operated by Charter's subsidiaries.

8. Charter Communications, Inc., Spectrum Management Holding Company, LLC, and Charter Communications Holding Company, LLC "provide management services for the cable systems owned or operated by their subsidiaries."[2]

9. The Defendants control, participate in the commission of, and have a direct financial interest in the infringing acts set forth herein.

JURISDICTION AND VENUE

10. ASSIA incorporates by reference and re-alleges the foregoing paragraphs as fully set forth herein.

11. This action arises under the patent laws of the United States, Title 35, Section 1 *et seq*. of the United States Code. Accordingly, this Court has jurisdiction over the subject matter of this action pursuant to 28 U.S.C. §§ 1331 and 1338(a).

12. This Court has general personal jurisdiction over Defendants due to its continuous and systematic contacts with the State of Texas, including its business activities and offices located within and throughout the State of Texas.

13. This Court has specific personal jurisdiction over Defendants consistent with the Texas Long Arm Statute and the Due Process Clause of the Fourteenth Amendment. Defendants have purposely availed themselves of the benefits and protections of Texas, and have maintained a presence in this District. Defendants have committed acts of patent infringement and have

[2] *Id.* at F-32.

induced and contributed to acts of patent infringement by others in this District and the State of Texas. Defendants, directly and through subsidiaries or intermediaries, have committed and continue to commit acts of infringement in this District by, among other things, designing, developing, manufacturing, importing, offering to sell, and selling products that infringe the Asserted Patents.

14. Defendants conduct continuous and systematic business in this District, including, among other acts, offering infringing products and services to those residing in this District and soliciting business from people residing in this District. Defendants make infringing sales of the accused products in this District. Defendants have committed infringing acts within this District giving rise to this action and have established minimum contacts within the forum state of Texas.

15. Venue is proper in this District under 28 U.S.C. §§ 1391 and 1400(b). On information and belief, Defendants have transacted business in this District and have committed acts of direct and indirect infringement in this District by, among other things, making, using, offering to sell, selling, and/or importing products that infringe ASSIA's patent as set forth herein. Defendants have one or more regular and established places of business in this District. On information and belief, Defendants maintain operations out of their leased properties at 1414 Summit Avenue, Plano, Texas 75074; 700 Alma Drive, Plano, Texas 75075; 2100 N. Dallas Parkway, Plano, Texas 75075; and 4255-A Dowlen Road, Beaumont, Texas 77706.

16. On information and belief, the aforementioned locations all bear Spectrum's logo. Charter's website describes Spectrum as "a suite of advanced broadband services offered by Charter Communications, Inc."[3]

[3] Charter Communications, Inc., *About Charter*, available at https://corporate.charter.com/about-charter (last visited Jan. 19, 2024).

17. Defendants have not maintained corporate separateness. On information and belief, the Charter entities and Spectrum share invoices; Spectrum is a brand or trade name of Charter Communications; Charter Communications operates Spectrum's business; Spectrum employees consent to act as agents of Charter Communications; job applicants of both entities apply through the Charter Communications website; and all employees are required to sign a Charter Communications arbitration agreement.[4]

18. Spectrum's presence and acts of infringement committed in this District are attributable and imputed to Charter for venue purposes. On information and belief, the Defendants function as an integrated organization in the operation of Defendants' business operations with respect to the infringing actions complained of herein.

19. Charter makes, uses, offers for sale, sells in and/or imports into the United States Charter's Spectrum High Speed Internet Service including wireless gateways, routers, modems, servers, and devices including downloadable agents that provide, analyze, and optimize subscriber's broadband internet service.

20. The accused products include Spectrum high-speed internet service, and the hardware and software providing that service, including gateways, wireless routers, access points, servers, and other devices, which may be located in the cable headend or provided locally to subscribers. On information and belief, these devices are delivered to subscribers by Charter or Spectrum employees located within the Eastern District of Texas. On information and belief, at least one cable headend is also located in this District, in close proximity to Charter's customers.

21. On information and belief, Defendants employ people in this District that further

[4] *Entropic Communications, LLC v. Charter Communications, Inc.*, No. 2:22-cv-00125-JRG, Defendants' Answers and Defenses, pages 5–6, 9–18, (May 10, 2023 E.D. Tex.), ECF No. 98-1 Appx 2-2.

Charter Communications, Inc.
Exhibit 1005
Page #5

the usage and sale of the infringing products, including enterprise architects, account coordinators, store managers and employees, operations and project development designers, software engineers, business development professionals, enterprise technology consultants, business account executives, and project managers.

THE ASSERTED PATENTS

22. The ’996 patent is titled “Adaptive FEC Codeword Management,” issued on October 5, 2010, from U.S. Patent Application No. 12/185,729, filed August 4, 2008, and claims the benefit of priority of a provisional application filed December 7, 2003.

23. ASSIA is the sole owner and assignee of the entire right, title, and interest in the ’996 patent and has the sole right to sue and recover damages for any current, past, or future infringement. The ’996 patent relates to dynamically controlling system parameters that affect performance in communications systems, including over wired and wireless transmission channels.

24. The ’996 patent is valid and enforceable.

25. The ’398 patent is titled “Method, Apparatus, and System for Optimizing Performance of a Communication Unit by a Remote Server,” and issued on November 24, 2020, from U.S. Patent Application No. 14/356,581, which was a national-phase application from an international application filed on November 10, 2011.

26. ASSIA is the sole owner and assignee of the entire right, title, and interest in the ’398 patent and has the sole right to sue and recover damages for any current, past, or future infringement. The ’398 patent describes optimizing performance of a communication unit, such as a wireless communication unit, by a remote server.

27. The ’398 patent is valid and enforceable.

28. The ’654 patent is titled “Method and System for Using a Downloadable Agent for

a Communication System, Device, or Link," and issued on June 29, 2021, from U.S. Patent Application No. 14/414,436, which was a national-phase application from an international application filed on September 25, 2012, and which claims the benefit of priority of a provisional application filed on July 13, 2012.

29. ASSIA is the sole owner and assignee of the entire right, title, and interest in the '654 patent and has the sole right to sue and recover damages for any current, past, or future infringement. The '654 patent describes a downloadable agent that is placed inside a LAN where the agent collects data on behalf of the cloud or WAN-based server and then transfers that data to the cloud or WAN-based server for analysis, allowing collection of information on devices (e.g., smartphones, routers, access points, and the like) to intelligently assess and manage performance of the communication devices or network.

30. The '654 patent is valid and enforceable.

31. The '108 patent is titled "Systems and Methods for Jointly Optimizing WAN and LAN Network Communications," and issued October 18, 2022, from U.S. Patent Application No. 16/926,696, filed on July 11, 2020, and which claims the benefit of an international application filed on January 12, 2011.

32. ASSIA is the sole owner and assignee of the entire right, title, and interest in the '108 patent and has the sole right to sue and recover damages for any current, past, or future infringement. The '108 patent describes jointly optimizing WAN and LAN Internet connections.

33. The '108 patent is valid and enforceable.

34. The '313 patent is titled "Method, Apparatus, and System for Optimizing Performance of a Communication Unit by a Remote Server," and issued on September 26, 2023, from U.S. Patent Application No. 17/102,099, which was filed on Nov. 23, 2020, and which is a

continuation of U.S. Pat. App. Serial No. 14/356,581, which was a national-phase application from an international application filed on November 10, 2011, and which issued as U.S. Patent No. 10,848,398.

35. ASSIA is the sole owner and assignee of the entire right, title, and interest in the ’313 patent and has the sole right to sue and recover damages for any current, past, or future infringement. The ’313 patent describes optimizing performance of a communication unit, such as a wireless communication unit, by a remote server.

36. The ’313 patent is valid and enforceable.

COUNT I: INFRINGEMENT OF THE ’996 PATENT

37. ASSIA incorporates by reference and re-alleges the foregoing paragraphs as if fully set forth herein. ASSIA further alleges the below upon information and belief.

38. Defendants and their customers have infringed and continue to infringe the ’996 patent, either literally or under the doctrine of equivalents, including at least claim 20, under 35 U.S.C. § 271(a), by making, using, offering to sell, and/or selling within the United States, and/or importing into the United States, systems including networks, wireless gateways, routers, modems, servers, and/or other devices that support DOCSIS 3.1 and later (collectively, “the Spectrum System”), for providing Spectrum Service.

39. For example, Claim 20 of the ’996 patent recites:

> 20. A transmission system comprising:
>
> a transmission channel to carry data between a transmitter and a receiver/decoder, each communicatively interfaced with the transmission channel;
>
> a transmission error value monitor communicatively interfaced with the receiver/decoder to periodically monitor for transmission error values indicative of impulse noise events on the transmission channel, wherein the transmission error values are periodically monitored after training and initialization on the receiver/decoder, the transmission error values being selected from a group comprising: a bit error rate, errored seconds, errored minutes, code violations over

> a fixed period of time, Signal-to-Noise Ratio (SNR) measured at the receiver/decoder, and Transmission Control Protocol and Internet Protocol (TCP/IP) throughput, and wherein the transmission error value monitor to further generate an input signal based on the transmission error values monitored; and
>
> a controller coupled with the transmitter to receive the input signal from the transmission error value monitor and to further generate a retransmission overhead control signal for the transmitter in response to the input signal.

40. The following paragraphs, images, and quotes demonstrate how claim 20 of the '996 patent is infringed by the Spectrum System, which supports DOCSIS 3.1. All highlighting and annotations in the images below have been added.

41. Charter's Spectrum System includes a transmission system that supports DOCSIS 3.1 and provides Spectrum Service. Charter began deploying DOCSIS 3.1 over the networks that supply Spectrum Service as early as 2017. *See* Jeff Baumgartner, *Charter Rolls DOCSIS 3.1 to Seven More Markets*, Next TV (Dec. 20, 2017), available at https://www.nexttv.com/news/charter-rolls-docsis-31-seven-more-markets-417201. Furthermore, Charter's comprehensive digitization by 2018 is captured in their own words: "We finished digitizing virtually all of Charter's 41-state footprint in 2018 and rolled out DOCSIS 3.1 in 13 months, helping set the foundation for 10G." *See also*, Charter Communications, Inc., *Our Path to 10G: Emergent Technology Posed to Revolutionize*, (Feb. 6, 2020), available at https://corporate.charter.com/newsroom/our-path-to-10g-emergent-technology-poised-to-revolutionize (last visited Jan. 19, 2024).

42. Charter's Spectrum System supporting DOCSIS 3.1 employs a transmission channel to carry data between a transmitter and a receiver/decoder, each communicatively interfaced with the transmission channel. Figure 2 on page 14 of DOCSIS 3.1 Physical Layer Specification (denoted by "PHY 3.1.19" in the following) shows that data ("Transparent IP Traffic") is transmitted between a transmitter (e.g., the CMTS) and a receiver (e.g., cable modem and/or router) over the cable channel ("Data-Over-Cable System"):

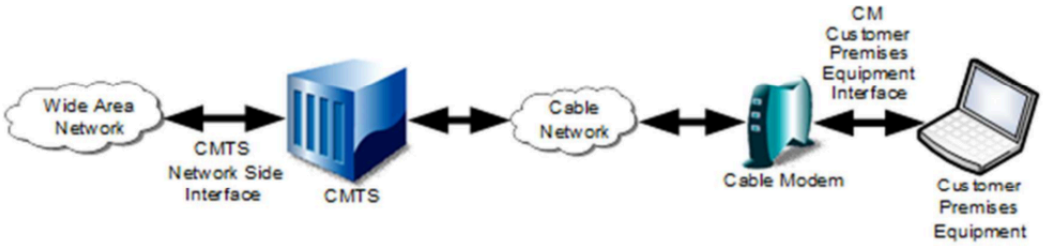

Figure 2 - Transparent IP Traffic through the Data-Over-Cable System

Cable Television Laboratories, Inc., *Data-Over-Cable Service Interface Specifications: DOCSIS 3.1, Physical Layer Specification*, CM-SP-PHYv3.1-I19-211110 (Nov. 10, 2021), available at https://account.cablelabs.com/server/alfresco/f6932455-1900-4985-8037-567bd828881d [hereinafter PHY 3.1.19]

In fact, the acronym "DOCSIS" stands for "Data Over Cable Service Interface Specification". Therefore, Charter's Spectrum System is a transmission system in which the CMTS (Cable Modem Termination System) and CM (Cable Modem) are communicatively interfaced with the transmission channel, namely the cable network.

43. Charter's Spectrum System supporting DOCSIS 3.1 employs a transmission error value monitor communicatively interfaced with the receiver/decoder to periodically monitor for transmission error values indicative of impulse noise events on the transmission channel. The DOCSIS 3.1 Profile Management Application v01 specification (denoted by "PMA 3.1.01" in the following) describes two methods for collecting transmission error values, indicating that the transmission error value monitor is integral to the PMA module. Specifically, Section 5.2.3 of PMA 3.1.01 details two different architectures for this type of data collection.

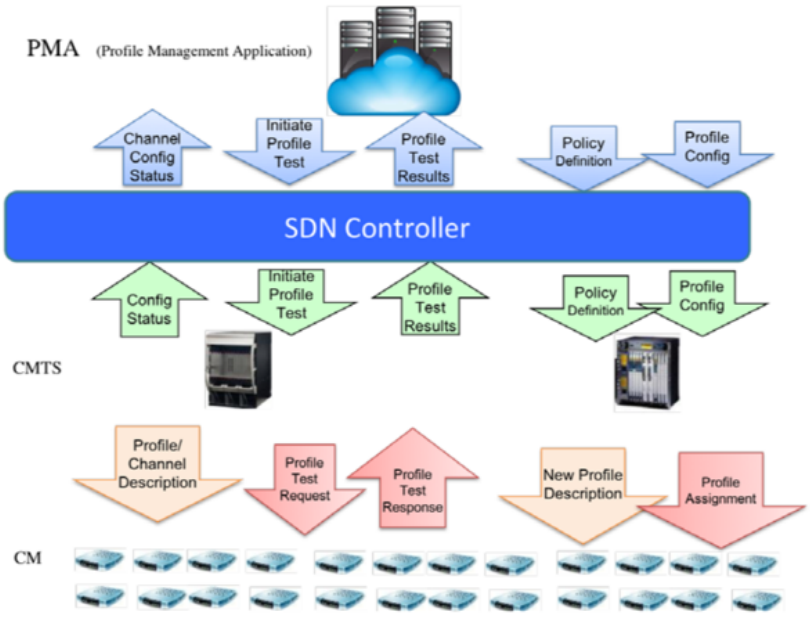

Figure 2 - PMA Architecture w SDN Controller

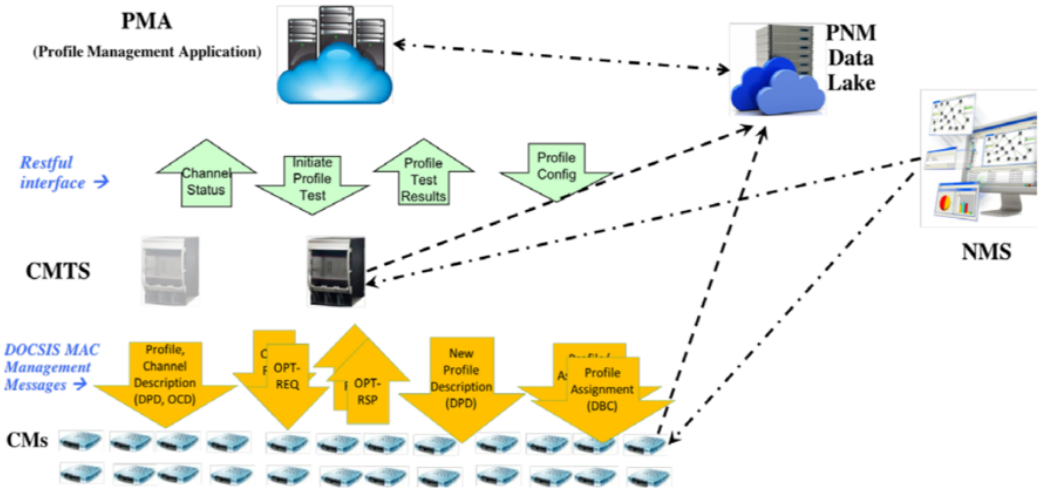

Figure 3 - Alternate PMA Architecture w PNM Data File Lake

Cable Television Laboratories, Inc., *DOCSIS 3.1 Profile Management Application Technical Report*, (May 30, 2018), available at https://account.cablelabs.com/server/alfresco/d534b3f4-3cdc-445b-8d71-e0bdfdb29e0e [hereinafter PMA 3.1.01].

This is further exemplified in Figure 19 of PMA 3.1.01, illustrating the data collection flow diagram.

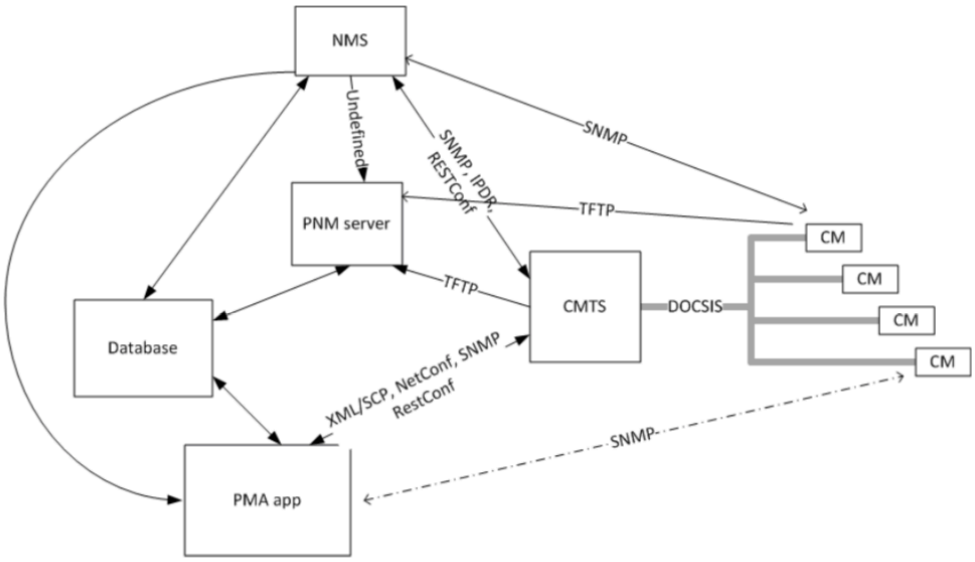

Figure 19 - PMA Data Backend and Protocols

The collected transmission error values include metrics such as RxMER and SNR Margin, crucial for assessing the quality and integrity of data transmission over the network.

11.2.1 Use of OPT to Obtain Cable Modem Downstream MER data

The OPT request message can be used to gather per subcarrier receive MER data from a CM. Several tests can provide the PMA with detailed information on a per-channel or per-test profile basis. The test RxMER Statistics per Subcarrier can provide the specific measured MER for each active subcarrier in the specified DS OFDM channel regardless of the currently assigned profiles. The RxMER per Subcarrier Threshold Comparison for Candidate Profile test allows the CM to make a measurement based on a target profile (un-assigned). This test has specific target MER values that the Operator has configured for each modulation order in the target profile. When the CM is requested to perform this test, the CM takes the RxMerVsBitloadingTarget values, compares those with the measured MER for a specific subcarrier, and determines the number of subcarriers that are above or below that value. The PMA application can then use this data to determine the performance of a given modulation order on a given subcarrier. The SNR Margin for Candidate Profile test measures the SNR margin between the required value (RxMerVsBitloadingTarget) and RxMerMargin.

44. Expanding on the monitoring capabilities, Charter's Spectrum System further includes a comprehensive analysis of codeword errors, as mentioned in Section 11.2.3 of PMA 3.1.01. This additional layer of error monitoring emphasizes the system's robust approach to maintaining transmission quality.

11.2.3 Obtaining Codeword Performance Data from the CM

Another key profile performance metric is the codeword error rates for a given profile. This data can be obtained from the CM via the CMTS OPT messages or via the PNM MIBs on the CM. The following sections describe the two methods that the PMA can employ to gather this data.

The periodicity of this monitoring process, essential for a consistent and accurate assessment of

the transmission channel's health, is rigorously outlined in Section 7.2.6 (page 22) of PMA 3.1.01. The document underscores the periodic nature of error detection, with data collection occurring at regular intervals, ensuring a dynamic and responsive approach to network management.

> The PMA could also direct the CMTS to use the profiles it tailored for a set of CMs and periodically test the CM performance on a particular profile over time.

Additionally, the procedural details provided in Section 8.2.6 (page 33) of PMA 3.1.01 further elucidate the methodologies employed for the ongoing evaluation of transmission error values.

45. In addition, Section 9.3.7 (page 189) (entitled "Downstream FEC Statistics") of PHY 3.1.19 shows that codeword errors (i.e., code violations) are collected periodically (every one second or every one minute) and then reported for an extended period of time, thereby providing a history of performance:

> The CM MUST be capable of providing the following downstream FEC summaries for data codewords on each OFDM channel for each profile being received by the CM:
>
> - Codeword errors vs time (seconds): Number of uncorrectable codewords and total number of codewords in each one-second interval for a rolling 10-minute period (600 values).
> - Codeword errors vs time (minutes): Number of uncorrectable codewords and total number of codewords in each one-minute interval for a rolling 24-hour period (1440 values).

46. In Charter's Spectrum System supporting DOCSIS 3.1, the transmission error values are selected from a group comprising: a bit error rate, errored seconds, errored minutes, code violations over a fixed period of time, Signal-to-Noise Ratio (SNR) measured at the receiver/decoder, and Transmission Control Protocol and Internet Protocol (TCP/IP) throughput. Specifically, the PMA (transmission error value monitor) collects data related to RxMER (SNR per subcarrier measured at the receiver/decoder), SNR Margin (proxy for SNR measured at the received/decoder), and codeword errors (code violations) over a fixed period of time.

Transmission error values like RxMER, BER, and codeword errors refer to "errors" in user data transmission. Therefore, they are collected during user data transmission, namely after training

and initialization of the receiver/decoder in the CM or the CMTS. The initialization and training phase of the cable link, for both the CM and the CMTS, are described in Sections 10.1 "CMTS Initialization," and 10.2 "Cable Modem Initialization and Reinitialization," respectively, on pages 373–427 of the "Data-Over-Cable Service Interface Specifications DOCSIS 3.1 MAC and Upper Layer Protocols Interface Specification CM-SP-MULPIv3.1.21" dated October 20, 2020. https://community.cablelabs.com/wiki/plugins/servlet/cablelabs/alfresco/download?id=3a751ba9-593c-464a-bc91-3675e1824e30.

47. In Charter's Spectrum System supporting DOCSIS 3.1, the PMA (the transmission error value monitor) collects data related to RxMER, SNR Margin, and codeword errors (code violations) over a fixed period of time. These quantities are part of the group of transmission error values defined in this element of the claim.

48. In Charter's Spectrum System supporting DOCSIS 3.1, the transmission error value monitor further generates an input signal based on the transmission error values monitored. Table 7 in Section 7.3.3.6 (page 29) of PMA 3.1.01 shows that the design of profiles is based on the results of various "profile tests," which are based on the monitored transmission error values such as RxMER, SNR Margin, and codeword errors:

Table 7 - OFDM Profile Tests Triggered by CMTS

Profile Test	Test Description	Required Attributes
RxMER Statistics per Subcarrier	Per subcarrier MER regardless of modulation or profile	CmMac, DsOfdmChannelIndex, DsProfileId
RxMER per Subcarrier Threshold Comparison for Candidate Profile	When this test is selected, the CM uses MER target values for each modulationOrder in the candidate Profile referenced in DsProfileId. Target values are configured in the OptMerThresholdCfg with RxMerVsBitloadingTarget	CmMac, DsOfdmChannelIndex, DsProfileId Test requires that one or more instances of OptMerThresholdCfg exist for the referenced CmMac, DsOfdmChannelIndex, DsProfileId
SNR Margin for Candidate Profile	When this test is selected, the CM uses the threshold values in the OptMerThresholdCfg for the specified DsOfdmChannelIndex, DsProfileId, ModulationOrder and the RxMerVsBitloadingTarget from the OptMerThresholdCfg	CmMac, DsOfdmChannelIndex, DsProfileId Test requires that one or more instances of OptMerThresholdCfg exist for the referenced CmMac, DsOfdmChannelIndex, DsProfileId, ModulationOrder and that RxMerMargin is set to a non-zero value.
Codeword Statistics for Candidate Profile	When this test is selected, the CM provides Codeword Statistics for the candidate profile	CmMac, DsOfdmChannelIndex, DsProfileId, MaxDuration, MaxCodewordCount and optionally MaxUncorrectedCw and CwTagging
Codeword Threshold Comparison for Candidate Profile	When this test is selected, the CM provides Codeword Statistics for the candidate profile	CmMac, DsOfdmChannelIndex, DsProfileId, MaxDuration, MaxCodewordCount and optionally MaxUncorrectedCw and CwTagging
NCP Field statistics	When this test is selected, the CM provides NCP Statistics for the candidate profile	CmMac, DsOfdmChannelIndex, DsProfileId, MaxDuration, NcpFieldCount, and optionally MaxNcpCrcFailCount and CwTagging
NCP CRC Threshold Comparison	When this test is selected, the CM provides NCP Statistics for the candidate profile	CmMac, DsOfdmChannelIndex, DsProfileId, MaxDuration, NcpFieldCount, and optionally MaxNcpCrcFailCount and CwTagging

For example, the "SNR Margin for Candidate Profile" test is defined in Section 5.12 of PNM 3.1.03, which describes the process of analyzing (i.e., comparing) the monitored transmission error values, such as RxMER, against corresponding target values, such as the RxMER Target or the Bit-Loading Target:

5.12 SNR Margin for Candidate Profile

Section 9.3.6.1 and Appendix VI of [PHYv3.1] discuss an estimate of the SNR margin available on a downstream OFDM channel with respect to a candidate OFDM modulation profile. The CMTS can send test data to the CM to measure the performance of a candidate profile. The OPT-REQ message (described in [MULPIv3.1]) is used by the CMTS to cause a CM to report various aspects of an OFDM downstream signal, including the CM's ability to receive a candidate downstream profile. The CM sends an OPT-RSP message to acknowledge the request; if the request was to start a test, then it sends another OPT-RSP message to report the results.

The OPT-REQ message from the CMTS includes a TLV that specifies the statistics requested from the CM. The following are statistics related to RxMER and SNR that can be requested from the CM.

- RxMER Statistics per Subcarrier
- RxMER per Subcarrier Threshold Comparison for Candidate Profile
- SNR Margin for Candidate Profile

In the OPT-REQ message from the CMTS, the following parameters are communicated to the CM.

- RxMER vs Bit-Loading Target (threshold RxMER value used by the CM to calculate the SNR margin for the candidate profile under test and reported in the associated OPT-RSP message)
- RxMER Margin (used by the CM to adjust the RxMER threshold value used to calculate the "Number of subcarriers whose RxMER is RxMER Margin below the RxMER Target" reported in the OPT-RSP message)

In the OPT-RSP message, under the category of RxMER and SNR Margin Data, the following data can be reported.

- RxMER per Subcarrier
- RxMER per Subcarrier Threshold Comparison Result
- Number of subcarriers whose RxMER is RxMER Margin below the RxMER Target—
  RxMER < (RxMER vs Bit-loading Target – RxMER Margin)
- SNR Margin
- Average RxMER

Therefore, the selection of profiles is based on the monitored transmission error values. The selected profiles are communicated by the PMA to the Convergence Layer and constitute an input signal.

49. Charter's Spectrum System supporting DOCSIS 3.1 employs a controller coupled with the transmitter to receive the input signal from the transmission error value monitor. The input signal (the assignment of profiles to CMs) is received by the Codeword Builder block in the CMTS transmitter, as illustrated in Figure 89 (Section 8.3.1 on page 177) of PHY 3.1.19:

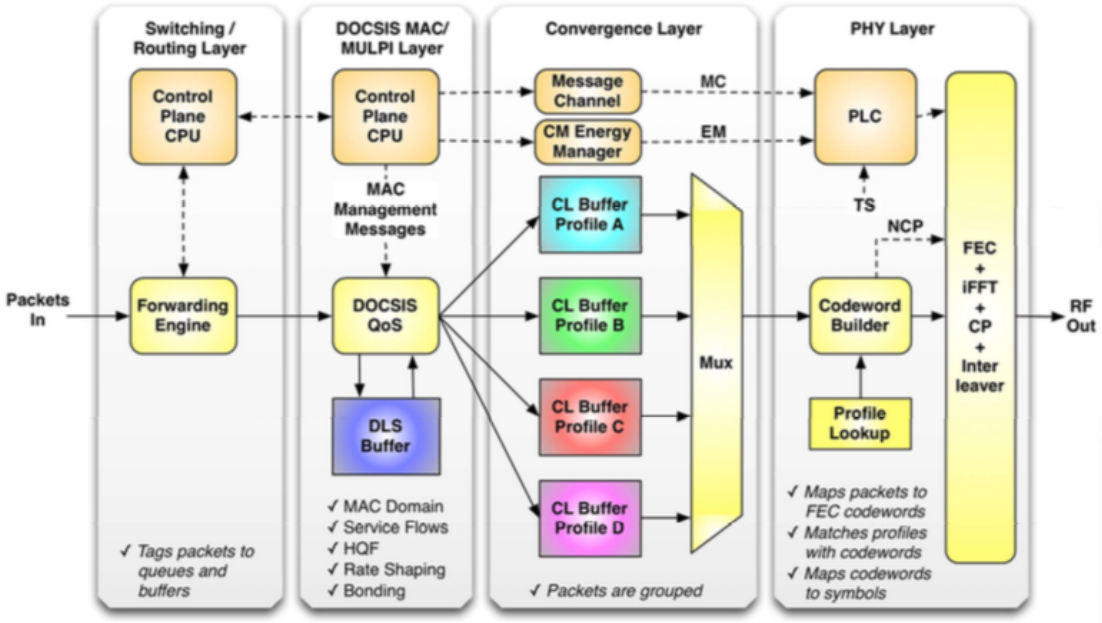

Figure 89 - Downstream Convergence Layer Block Diagram

As seen above, the codeword builder receives the profile information from the Convergence Layer and acts as a controller, which sends control information to CMs.

50. The controller employed by Charter's Spectrum System supporting DOCSIS 3.1 is also configured to generate a retransmission overhead control signal for the transmitter in response to the input signal. Referring back to Figure 89 (above), one example of a retransmission overhead control signal comprises the "Next Codeword Pointer" (NCP) signals generated by the Codeword Builder. The NCP signals are introduced in Section 7.5.5.2 (page 121) and defined in Section 8.3.4 (page 179) of PHY 3.1.19:

8.3.4 Next Codeword Pointer

When the data codewords are mapped to subcarriers within a symbol, a pointer is needed to identify where a data codeword starts. This is known as the Next Codeword Pointer (NCP). The collection of NCP message blocks within

The use of NCPs is illustrated in Figure 96:

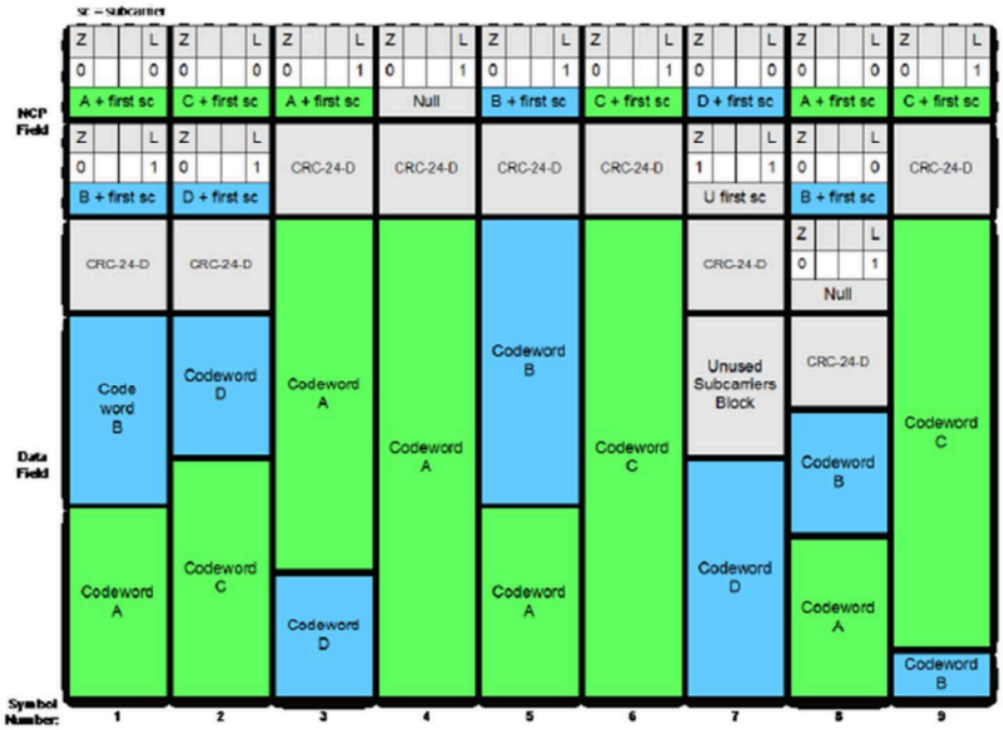

Figure 96 - NCP Examples

51. The NCPs define the length of each codeword. Since the number of parity bytes is fixed, the NCPs define the Codeword Composition Ratio (CCR) of each codeword, *e.g.*, the ratio between payload bytes and total bytes in the FEC codeword (and the number of total bytes is the sum of the payload bytes and the parity bytes). The fact that the FEC coding in DOCSIS 3.1 uses a fixed number of parity bytes is demonstrated by the "codeword shortening" process described in Section 7.5.4 of PHY 3.1.19. This process reduces the number of payload bytes through two rounds of zero padding (one for Bose-Chaudhuri-Hocquenghem encoding and another one for Low-Density Parity-Check encoding), and therefore selects a CCR for the resulting downstream FEC codeword. This process is illustrated in Figures 46 and 47 (page 115) of PHY 3.1.19:

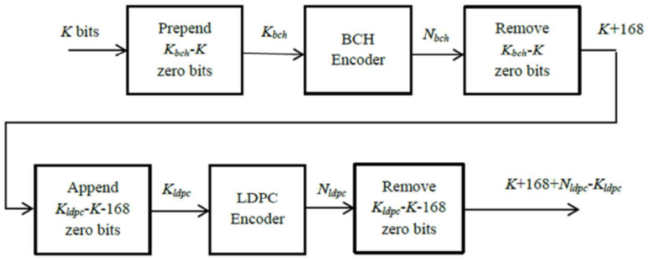

Figure 46 - Codeword Shortening Process

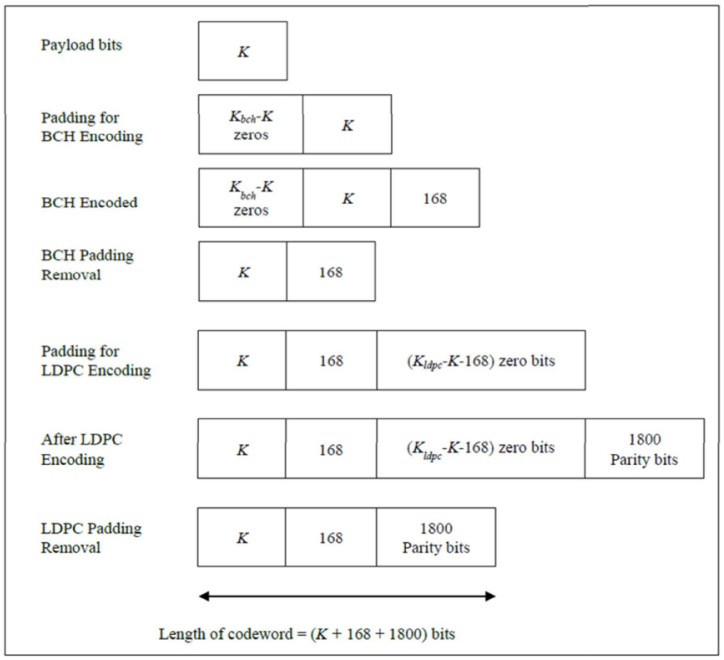

Figure 47 - Padding Process

52. Defendants have had knowledge of the ’996 patent since before this Complaint was filed, or at a minimum received notice of the ’996 patent upon filing of this Complaint, and are aware of their infringement of the ’996 patent.

53. Upon information and belief, Charter has indirectly infringed and continues to indirectly infringe at least claim 20 of the ’996 patent in violation of 35 U.S.C. § 271(b). From at least the time Charter received notice of the ’996 patent, Charter has induced others to infringe at least claim 20 of the ’996 patent under 35 U.S.C. § 271(b) by, among other things, and with specific intent or willful blindness, actively aiding and abetting others to infringe by encouraging end users,

including clients, subscribers, and customers, to use and/or put the Spectrum Service into service at the user's premises. Charter's end users directly infringe claim 20 when they use the Spectrum Service as well as put the Spectrum System into service and exercise control over the Spectrum Service by operating, configuring, and otherwise using Spectrum Service equipment and obtain benefits from its application, such as enjoying Internet access through DOCSIS 3.1.

54. In particular, Charter actively, knowingly, and intentionally induced, and continues to actively, knowingly, and intentionally induce, infringement of the '996 patent; with the knowledge and intent that end users will make or use Charter's Spectrum System; and with the knowledge and intent to encourage and facilitate end users' infringement through the distribution of Spectrum Service over the Spectrum System and/or the creation and dissemination of promotional and marketing materials, supporting materials, instructions, product manuals, and/or technical information related to Spectrum Service, such as:

https://www.spectrum.com/contact-spectrum;
https://www.spectrum.net/support;
https://www.youtube.com/watch?v=XM5SQYs409s;
https://www.youtube.com/watch?v=5fu__UmzFqw; and
https://www.youtube.com/watch?v=UhMo3IqQn1E.

55. Charter does so knowing that its customers will commit these infringing acts. Despite its knowledge of the '996 patent, Charter continues to make, use, sell, and/or offer for sale its infringing products thereby specifically intending for and inducing its customers to infringe the '996 patent.

56. Defendants have also contributed to, and continue to contribute to the infringement of claim 20 of the '996 patent by making, using, offering to sell, selling, and/or importing the components of the Spectrum System that support DOCSIS 3.1, including networks, wireless gateways, routers, modems, servers, and/or other devices, in violation of 35 U.S.C. § 271(c).

Defendants make, use, offer to sell, sell, and/or import such products with the knowledge that they are especially designed for use in and constitute a material part of the claimed transmission system of claim 20, and are not a staple article of commerce suitable for substantial non-infringing use. For example, Defendants actively and knowingly sell components of the Spectrum System that support DOCSIS 3.1 and provide customer support, installation, instruction materials, and/or other technical information to end users for the use of such products as a component of the transmission system of claim 20.

57. Charter's infringement of the '996 patent is willful and egregious. As set forth above, Defendants have had knowledge of the '996 patent since before this Complaint was filed, or at a minimum received notice of the '996 patent upon filing of this Complaint, and are aware of their infringement of the '996 patent. Among other things, ASSIA informed Charter by letter in November 2019 that Charter was benefiting from the use of ASSIA's patented technology in the products and services that Charter provides to its customers, including those set forth in this Complaint. ASSIA informed Charter that ASSIA's technology was covered by ASSIA's patents and invited Charter to have discussions to conclude a license to the ASSIA patent portfolio, which include the Asserted Patents. As a result of the past dealings and interactions and communications between ASSIA and Charter, *inter alia*, Charter (1) had knowledge of, or was willfully blind to, the existence of the '996 patent and (2) had knowledge of, or was willfully blind to the fact, that its conduct constituted infringement, induced, and/or contributed to infringement of the '996 patent.

58. As a result of Charter's infringement of the '996 patent, ASSIA has suffered monetary damages and is entitled to no less than a reasonable royalty for Charter's use of the claimed inventions of the '996 patent, together with interest and costs as determined by the Court.

Charter Communications, Inc.
Exhibit 1005
Page #21

ASSIA will continue to suffer damages in the future.

59. Charter does not have any rights to use the ’996 patent as alleged in this Complaint.

60. ASSIA has complied with 35 U.S.C. § 287.

61. ASSIA’s Asserted Patents are publicly available from the United States Patent Office and other online resources such as Google Patents.

62. Charter’s acts of direct and indirect infringement have caused and continues to cause damage to ASSIA. ASSIA is entitled to damages in accordance with 35 U.S.C. §§ 271, 281, and 284 sustained as a result of Charter’s wrongful acts in an amount to be proven at trial.

COUNT II: INFRINGEMENT OF THE ’398 PATENT

63. ASSIA incorporates by reference and re-alleges the foregoing paragraphs as if fully set forth herein. ASSIA further alleges the below upon information and belief.

64. Defendants and their customers have infringed and continue to infringe the ’398 patent, either literally or under the doctrine of equivalents, including at least claim 1, under 35 U.S.C. § 271(a), by making, using, offering to sell, and/or selling within the United States, and/or importing into the United States, routers and controllers such as the Sagemcom Fast 5285 router, which implement the Wi-Fi Agile Multiband specification (collectively, “the Spectrum WFAM products”), to provide Spectrum Advanced Wi-Fi to subscribers. *See, e.g.*, Spectrum, *Spectrum Advanced WiFi: Gain Complete Control Over Your WiFi*, available at https://www.spectrum.com/internet/wifi-service/spectrum-advanced-wifi (last visited Jan. 19, 2024).

65. Charter (including its agents) install and test Spectrum WFAM products in subscribers’ homes and/or businesses and thereby cause the performance of the method steps of claim 1. In addition, Charter conditions subscribers’ participation in the Spectrum Advanced Wi-

Fi service and receipt of benefits of using the Spectrum Advanced Wi-Fi service upon performing the steps of claim 1 and establishes the manner and timing of that performance by requiring that the Spectrum WFAM products comply with the Wi-Fi Agile Multiband specification.

66. For example, Claim 1 of the ’398 patent reads as follows:

> 1. A method for improving performance of one or more communication units, the method comprising:
>
> receiving, by a server, from network monitoring devices that monitor, in real-time, data associated with an operation of two or more communication units located in different geographical areas, the data comprising a parameter;
>
> processing, by the server, at least one of the data and historical data;
>
> based on the processed data, determining a policy for at least one of the two or more communication units; and
>
> in response to the server detecting interference or noise from nearby wireless channels, determining that packets will be lost regardless of rate selection and, otherwise, communicating the policy to at least one or more communication units that implement one or more algorithms that use the parameter and at least a rule or a condition for the one or more communication units to improve a performance of the one or more communication units.

67. The following paragraphs, images, and quotes demonstrate how claim 1 of the ’398 patent is infringed by the use of Spectrum WFAM products, which implement the Wi-Fi Agile Multiband specification to provide or receive Spectrum Advanced Wi-Fi service. All highlighting and annotations in the images below have been added.

68. The Spectrum Advanced Wi-Fi service and Spectrum WFAM products improve the performance of one or more communication units. As one example, the Sagemcom Fast 5285 router, for example, is certified by the Wi-Fi Alliance as compliant with “Spectrum & Regulatory Wi-Fi Agile Multiband WMM.” The Wi-Fi Alliance website touts: “Wi-Fi CERTIFIED Agile Multiband facilitates better management of Wi-Fi network environments and enables Wi-Fi devices to better respond to changing Wi-Fi network conditions. Improved resource utilization

helps balance Wi-Fi network load, increase capacity, and provide end users the best possible Wi-Fi experience." WiFi Alliance, *Wi-Fi Agile Multiband*, available at https://www.wi-fi.org/discover-wi-fi/wi-fi-agile-multiband (last visited Jan. 19, 2024). As shown in the Wi-Fi Agile Multiband topology below, client STAs are communication units associated with one or more access points (APs):

2.2 Topology

The topology of a Wi-Fi Agile Multiband wireless infrastructure network may vary based on components and deployment requirements. This section illustrates two typical topologies based on the components identified in section 2.1.

Figure 1 depicts the system topology for connecting Wi-Fi Agile Multiband devices.

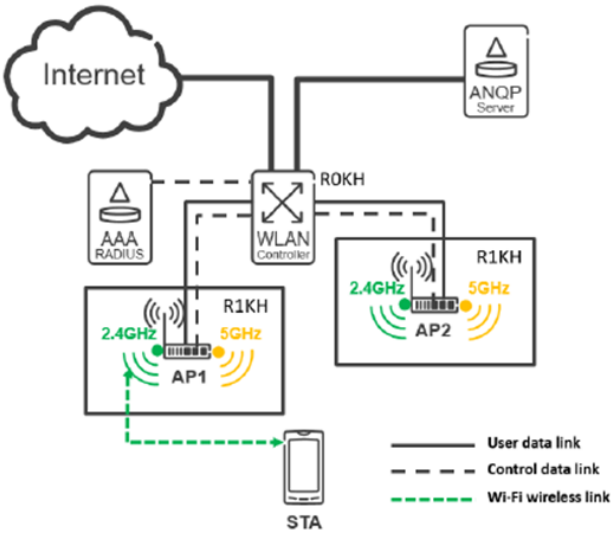

Figure 1. Wi-Fi Agile Multiband wireless infrastructure network

Wi-Fi Alliance, *Wi-Fi Agile Multiband Technical Specification v1.5,* at 9, (2020) [hereinafter Wi-Fi Agile Multiband Technical Specification].

69. Spectrum Advanced Wi-Fi service and the Spectrum WFAM products include a server that receives from network monitoring devices that monitor, in real-time, data associated with an operation of two or more communication units located in different geographical areas, the data comprising a parameter. Sagemcom Fast 5285 routers correspond to the access points (APs) in the Wi-Fi Agile Multiband topology above. The APs include both servers and network monitoring devices that provide data (e.g., Beacon reports) from connected communication units

(STAs).

2.3.3 Required IEEE 802.11 capabilities

This section specifies additional IEEE 802.11 capabilities that Wi-Fi Agile Multiband APs and Wi-Fi Agile Multiband STAs shall support.

A Wi-Fi Agile Multiband AP shall support the following capabilities:

- ANQP response with Neighbor Report ANQP-element
- Neighbor Report element with BSS Transition Candidate Preference subelement
- BTM Request frame with:
  - BSS Transition Candidate List Entries field
  - Disassociation Timer field
  - Preferred Candidate List Included bit
  - Disassociation Imminent bit
  - BSS Termination Included bit
- Beacon request (refer to section 3.4 for more information)
- Country element
- The "Last Beacon Report Indication Request" subelement

Wi-Fi Agile Multiband Technical Specification at 11–12.

3.4 Beacon report

A Wi-Fi Agile Multiband AP shall send a Beacon request to an associated STA whenever it requires a Beacon report from the STA. The AP shall only send the Beacon request to the STA if the STA indicates that it supports the associated RM capability (as specified in section 11.11.9.1 of [1]).

The Beacon requests may be sent with the following parameters:

- Channel Number set to
  - a specific channel (along with the appropriate global operating class) or
  - 0 (along with the appropriate global operating class) or
  - 255 (along with one or more AP Channel Report subelements)
- Measurement mode set to
  - Active or
  - Passive or
  - Beacon Table

Wi-Fi Agile Multiband Technical Specification at 15.

A Wi-Fi Agile Multiband AP shall not set a measurement mode in a Beacon request to an associated STA to a mode that the STA has not explicitly indicated support for via RM Enabled Capabilities element.

A Wi-Fi Agile Multiband AP may use the information supplied in the Beacon reports from associated Wi-Fi Agile Multiband STAs as an input into an algorithm used to select a new channel for the BSS and/or for requesting a BSS transition for any associated Wi-Fi Agile Multiband STA. The specification of such algorithms is beyond the scope of this program.

A Wi-Fi Agile Multiband STA shall accept a Beacon request from its associated AP with measurement mode set to Beacon Table, and respond with a Beacon report as specified in section 11.11.9.1 of [1].

A Wi-Fi Agile Multiband STA that implements the subset of FT protocols as outlined in section 3.7 shall implement support for active and passive measurement mode Beacon requests, and indicate such support via RM Enabled Capabilities element, as specified in [1].

A Wi-Fi Agile Multiband STA that indicates support for active and passive Beacon requests should[4] accept a Beacon request from its associated AP with measurement mode set to active or passive, and respond with a Beacon report after performing the appropriate procedures, as specified in section 11.11.9.1 of [1].

A Wi-Fi Agile Multiband STA that responds to an active or passive Beacon request shall not include information about channels that do not overlap with the requested channels. A STA is allowed, but not required, to send information about overlapping channels, in the Beacon report it sends to the AP.

A Wi-Fi Agile Multiband STA shall, when responding to a Beacon request, indicate a global operating class in Beacon reports, except if the corresponding received Beacon or Probe Response frame indicates (for example in Supported Operating Classes or AP Channel Report elements) a non-global operating class, in which case the STA shall indicate either the same non-global operating class or the corresponding global operating class.

A Wi-Fi Agile Multiband STA shall indicate the last frame of the sequence of frames generated as a response to a Beacon request when requested by an AP in a Beacon Request, as specified in section 9.4.2.21.7 of [1].

A Wi-Fi Agile Multiband STA shall report in the Beacon Report all information elements requested by the AP in a Beacon Request, without truncating any of those elements. When necessary, the Wi-Fi Agile Multiband STA shall employ fragmentation of the Beacon Report, as specified in section 9.4.2.21.7 of [1].

Wi-Fi Agile Multiband Technical Specification at 16.

Beacon reports are formatted as follows to provide real-time data associated with multiple STAs in physically different locations:

11.11.9.1 Beacon report

If a STA accepts a Beacon request it shall respond with a Radio Measurement Report frame containing Beacon reports for all observed BSSs matching the BSSID and SSID in the Beacon request, at the level of detail requested in the Reporting Detail. If the Reporting Detail is 1 and the optional Request subelement is included in the Beacon request, the corresponding Beacon report shall include the list of elements listed in the Request subelement. The RCPI in the Beacon report indicates the power level of the received Beacon, Measurement Pilot, or Probe Response frame. For repeated measurements (when the Measurement Request frame contains a nonzero value for the Number of Repetitions field), the transmission of the Beacon report may be conditional on the measured RCPI or RSNI value. If the Measurement Request frame contains a 0 value for the Number of Repetitions field, the Beacon Reporting subelement shall not be included in the Beacon request. If the Measurement Request frame contains a nonzero value for the Number of Repetitions field, and if both dot11RMBeaconMeasurementReportingConditionsActivated and dot11RMRepeatedMeasurementsActivated are true, and if a Beacon Reporting subelement is included in a Beacon request, the STA shall respond with a Beacon report if the indicated Beacon reporting condition is true. Otherwise, the STA shall not respond with a Beacon report. Table 9-89 lists the reporting conditions that are based on the measured RCPI or RSNI levels.

IEEE Computer Soc'y, IEEE Std 802.11-2016, *Part 11: Wireless LAN Medium Access Control (MAC) and Physical Layer (PHY) Specifications,* at 1716 (Dec. 14, 2016), available at https://www.candelatech.com/downloads/802.11-2016.pdf [hereinafter IEEE 802.11-2016 Specification].

The Basic Service Set Identifier (BSSID) in a Beacon report is an example of information that constitutes a parameter:

9.4.2.22.7 Beacon report

The format of the Measurement Report field corresponding to a Beacon report is shown in Figure 9-199.

	Operating Class	Channel Number	Actual Measurement Start Time	Measurement Duration	Reported Frame Information
Octets:	1	1	8	2	1

	RCPI	RSNI	BSSID	Antenna ID	Parent TSF	Optional Subelements
Octets:	1	1	6	1	4	variable

Figure 9-199—Measurement Report field format for Beacon report

The Operating Class field indicates the operating class that identifies the channel set of the received Beacon or Probe Response frame. The Country, Operating Class, and Channel Number fields together specify the channel frequency and spacing of the received Beacon or Probe Response frame. Valid operating classes are listed in Annex E.

The Channel Number field indicates the channel number of the received Beacon or Probe Response frame. Channel number is defined within an operating class as shown in Annex E.

IEEE 802.11-2016 Specification at 843.

70. The Spectrum Advanced Wi-Fi service and Spectrum WFAM products process, by the server, at least one of the data and historical data. The server will process Beacon report information it receives from the client STAs.

2.3.3 Required IEEE 802.11 capabilities

This section specifies additional IEEE 802.11 capabilities that Wi-Fi Agile Multiband APs and Wi-Fi Agile Multiband STAs shall support.

A Wi-Fi Agile Multiband AP shall support the following capabilities:

- ANQP response with Neighbor Report ANQP-element
- Neighbor Report element with BSS Transition Candidate Preference subelement
- BTM Request frame with:
  - BSS Transition Candidate List Entries field
  - Disassociation Timer field
  - Preferred Candidate List Included bit
  - Disassociation Imminent bit
  - BSS Termination Included bit
- Beacon request (refer to section 3.4 for more information)
- Country element
- The "Last Beacon Report Indication Request" subelement

Wi-Fi Agile Multiband Technical Specification at 11–12.

A Wi-Fi Agile Multiband AP shall not set a measurement mode in a Beacon request to an associated STA to a mode that the STA has not explicitly indicated support for via RM Enabled Capabilities element.

A Wi-Fi Agile Multiband AP may use the information supplied in the Beacon reports from associated Wi-Fi Agile Multiband STAs as an input into an algorithm used to select a new channel for the BSS and/or for requesting a BSS transition for any associated Wi-Fi Agile Multiband STA. The specification of such algorithms is beyond the scope of this program.

A Wi-Fi Agile Multiband STA shall accept a Beacon request from its associated AP with measurement mode set to Beacon Table, and respond with a Beacon report as specified in section 11.11.9.1 of [1].

Wi-Fi Agile Multiband Technical Specification at 16.

71. The Spectrum Advanced Wi-Fi service and Spectrum WFAM products, based on the processed data, determine a policy for at least one of the two or more communication units. The BSS Transition Candidate List Entries field and the Preference field for the most-preferred BSS are examples of determining a policy for at least one of the two or more communication units:

3.5.1.2 STA to Serving AP, BSS Transition Management Based

A Wi-Fi Agile Multiband STA may send a BTM Query frame to its serving Wi-Fi Agile Multiband AP to request a prioritized list of BSSs within the AP's ESS to which the Wi-Fi Agile Multiband STA may transition.

On receipt of a BTM Query frame, the AP shall respond with a BTM Request frame (refer to section 9.6.14.9 in [1]), that:

1. Shall include a BSS Transition Candidate List Entries field (refer to section 9.6.14.9 of [1]), that:
   a. Contains one or more Neighbor Report elements, each of which shall correspond to a global operating class and shall contain the BSS Transition Candidate Preference subelement (Figure 9-299 of [1])
   b. When one or more Neighbor Report elements are present:
      - The Preference field for the most-preferred BSS shall be set to 255
      - The Preference field values used for each level of preference shall decrement consecutively from 255, except for excluded BSSs which shall have Preference field set to zero
      - The Preference field for BSSs that have the same level of preference shall be set to the same value
   c. Shall include a Neighbor Report element for the AP's own BSS that corresponds to the address 1 field of the BTM Query frame. If the AP does not wish the STA to keep the association with the BSS, the AP shall set the preference of its own BSS to zero.
2. May include an MBO-OCE IE in the BSS Transition Candidate List Entries field if the Wi-Fi Agile Multiband STA has indicated that it has cellular data connection available in the Cellular Data Capabilities attribute or Cellular Data Capabilities subelement. If included, the MBO-OCE IE shall contain the Cellular Data Connection Preference attribute[7].

Wi-Fi Agile Multiband Technical Specification at 18.

9.6.14.9 BSS Transition Management Request frame format

The BSS Transition Management Request frame uses the Action frame body format and is transmitted by an AP STA in response to a BSS Transition Management Query frame, or autonomously. The format of the BSS Transition Management Request Action field is shown in Figure 9-701.

	Category	WNM Action	Dialog Token	Request mode	Disassociation Timer
Octets:	1	1	1	1	2

	Validity Interval	BSS Termination Duration (optional)	Session Information URL (optional)	BSS Transition Candidate List Entries (optional)
Octets:	1	0 or 12	variable	variable

Figure 9-701—BSS Transition Management Request Action field format

The Category field is defined in 9.4.1.11.

The WNM Action field is defined in 9.6.14.1.

The Dialog Token field is the nonzero value received in the BSS Transition Management Query frame if the BSS Transition Management Request frame is being transmitted in response to a BSS Transition

IEEE 802.11-2016 Specification at 1230.

The Request mode field is defined in Figure 9-702.

	Preferred Candidate List Included	Abridged	Disassociation Imminent	BSS Termination Included	ESS Disassociation Imminent	Reserved
Bit:	0	1	2	3	4	5- 7

Figure 9-702—Request Mode field

— The Preferred Candidate List Included (bit 0) field indicates whether the BSS transition candidate list included in this frame is a preferred candidate list or a list of known BSS transition candidates. The Preferred Candidate List Included bit set to 0 indicates that the receiving STA can ignore the BSS Transition Candidate List Entries field (see 11.24.7.3). The Preferred Candidate List Included bit set to 1 indicates that the sender expects the receiving STA to process this frame.

— The Abridged (bit 1) field indicates to the recipient of the frame the intended treatment of all BSSIDs not listed in the BSS Transition Candidate List Entries field. The AP sets the Abridged bit in the Request Mode field to 1 when a preference value of 0 is assigned to all BSSIDs that do NOT appear in the BSS Transition Candidate List. The AP sets the Abridged bit in the Request Mode field to 0 when the AP has no recommendation for or against any BSSID not present in the BSS Transition Candidate List Entries field.

— The Disassociation Imminent (bit 2) field indicates whether the STA will be disassociated from the current AP. The value 1 in the Disassociation Imminent bit in the Request Mode field indicates that the STA is to be disassociated from the current AP, while the value 0 indicates that disassociation from the AP is not imminent.

— The BSS Termination Included (bit 3) field indicates that the BSS Termination Duration field is included, the BSS is shutting down and the STA will be disassociated. The AP sets the BSS Termination Included bit in the Request mode field to 1 to indicate that the BSS is shutting down. The BSS Termination Included bit is 0 if no BSS Termination Duration information is included in the BSS Transition Management Request frame.

— The ESS Disassociation Imminent (bit 4) field indicates that the Session Information URL field is included, and that the STA will be disassociated from the ESS. The value 1 in the ESS Disassociation Imminent bit in the Request Mode field indicates that the STA is to be disassociated from the ESS, while the value 0 indicates that disassociation from the ESS is not imminent. When the ESS Disassociation Imminent bit value is 1, a Session Information URL field is included in the BSS Transition Management Request frame.

IEEE 802.11-2016 Specification at 1231.

9.6.14.9 BSS Transition Management Request frame format

⋮

The BSS Transition Candidate List Entries field contains zero or more Neighbor Report elements described in 9.4.2.37. If the STA has no information in response to the BSS Transition Management Query frame or in an unsolicited BSS Transition Management Request frame, the Neighbor Report elements are omitted and the Preferred Candidate List Included bit is 0. The length of the BSS Transition Candidate List Entries in a BSS Transition Management Request frame is limited by the maximum MMPDU size (see 9.3.3.2).

IEEE 802.11-2016 Specification at 1232.

72. The Spectrum Advanced Wi-Fi service and Spectrum WFAM products, in response to the server detecting interference or noise from nearby wireless channels, determine that packets will be lost regardless of rate selection. A client STA can signal that a channel is unusable due to detected noise or interference (i.e., that packets will be lost regardless of rate selection) through a WNM-Notification Request Frame with a Non-preferred Channel Report subelement:

3.2 Channel and Band Indication and Preference

A Wi-Fi Agile Multiband STA shall inform the AP of all of its channels/bands capabilities by including the Supported Operating Classes element in the (Re)Association Request frame. A Wi-Fi Agile Multiband STA shall use the global operating class table (refer to Table E-4 of [1]) to indicate operating classes in the Operating Classes[3] field list. In addition, it may also indicate some or all of these operating classes using non-global operating class tables.

A Wi-Fi Agile Multiband STA shall inform its serving Wi-Fi Agile Multiband AP or candidate Wi-Fi Agile Multiband AP of channels in which it will not operate, or prefers not to operate. This information is communicated to the Wi-Fi Agile Multiband AP when the Wi-Fi Agile Multiband STA associates or reassociates, and when the information changes while the Wi-Fi Agile Multiband STA is associated.

On (re)association a Wi-Fi Agile Multiband STA shall indicate non-preferred channels by including one or more Non-preferred Channel Report attributes (refer to section 4.4.2) in the (Re)Association Request frame. The Wi-Fi Agile Multiband AP may store the non-preferred channels for this Wi-Fi Agile Multiband STA.

An associated Wi-Fi Agile Multiband STA shall indicate to the serving Wi-Fi Agile Multiband AP that its list of non-preferred channels has changed by transmitting a WNM-Notification Request frame with Non-preferred Channel Report subelement (refer to section 4.4 and 4.4.1).

Wi-Fi Agile Multiband Technical Specification at 14.

4.4.1 Non-preferred Channel Report subelement

The format of the Non-preferred Channel Report subelement is illustrated in Table 24. One or more Non-preferred Channel Report Subelements may be included in Optional Subelements field in WNM-Notification Request frame, as defined in section 9.6.14.29 in [1]. Each Non-preferred Channel Report Subelement may specify zero or more channels and their preferences as defined in Table 24.

Table 24. Non-preferred Channel Report subelement

Field	Size (Octets)	Value (Hex)	Description
Subelement ID	1	0xDD	The Subelement ID is set to value 0xDD (221 – Vendor Specific), as specified in Table 9-360 in [1].
Length	1	0x04 or Variable	Length of the following fields in the subelement in octets.
OUI	3	0x506F9A	The OUI is set to value 0x506F9A, as used by the Wi-Fi Alliance.
OUI Type	1	0x02	The OUI Type is set to value 0x02 as used by the Wi-Fi Alliance for Non-preferred Channel Report.
Operating Class	1	Variable	Operating Class contains an enumerated value from table E-4 in Annex E of [1], specifying the global operating class in which the Channel List is valid
Channel List	Variable	Variable	The Channel List contains a variable number of octets, where each octet describes a single channel number. An empty Channel List field indicates that the indicated Preference applies to all channels in the Operating Class. Channel numbering is dependent on Operating Class per Annex E of [1]
Preference	1	0-255	Indicates a preference value for the above set of channels, as defined in Table 9.
Reason Code	1	0-255	Indicates the reason that the Wi-Fi Agile Multiband STA prefers not to operate in this band/channel, refer to Table 10.

Wi-Fi Agile Multiband Technical Specification at 29.

The values of the Preference Field and Reason Code Field indicate whether it was determined that packets will be lost regardless of rate selection:

Table 9. Preference Field Values

Value	Description
0	Indicates a non-operable band/channel of the Wi-Fi Agile Multiband STA
1	Indicates a band/channel the Wi-Fi Agile Multiband STA prefers not to operate in
2-254	Reserved
255	Indicates a band/channel the Wi-Fi Agile Multiband STA prefers to operate in

The value of the Reason Code field is defined in Table 10.

Table 10. Reason Code Field Values

Value	Name	Description
0	Unspecified	Unspecified reason
1	Co-located Interference	An unacceptable level of interference is being experienced by the Wi-Fi Agile Multiband STA in this channel
2	In-device Interferer	The Wi-Fi Agile Multiband STA has another active connection in this channel, or near enough to this channel to cause operating interference
3-255	Reserved	Reserved

73. The Spectrum Advanced Wi-Fi service and Spectrum WFAM products otherwise

communicate the policy to at least one or more communication units that implement one or more algorithms that use the parameter and at least a rule or a condition for the one or more communication units to improve a performance of the one or more communication units. If there is no inoperable channel, the Spectrum Advanced Wi-Fi service and Spectrum WFAM products will improve performance by communicating the policy to STAs by sending the current BSS Transition Management Request frame. The decision by the STA whether to transition is an example of an algorithm that uses the BSSID (i.e., the MAC address of an AP) of the AP to which the STA is transitioning. The mechanism within an STA that determines to transition to a new BSS is an example of a rule or condition used by the algorithm. The BSS Transition Management Request Action field includes the policy that the Spectrum WFAM products communicate to the STAs:

9.6.14.9 BSS Transition Management Request frame format

The BSS Transition Management Request frame uses the Action frame body format and is transmitted by an AP STA in response to a BSS Transition Management Query frame, or autonomously. The format of the BSS Transition Management Request Action field is shown in Figure 9-701.

	Category	WNM Action	Dialog Token	Request mode	Disassociation Timer
Octets:	1	1	1	1	2

	Validity Interval	BSS Termination Duration (optional)	Session Information URL (optional)	BSS Transition Candidate List Entries (optional)
Octets:	1	0 or 12	variable	variable

Figure 9-701—BSS Transition Management Request Action field format

The Category field is defined in 9.4.1.11.

The WNM Action field is defined in 9.6.14.1.

The Dialog Token field is the nonzero value received in the BSS Transition Management Query frame if the BSS Transition Management Request frame is being transmitted in response to a BSS Transition

IEEE 802.11-2016 Specification at 1230.

74. Defendants have had knowledge of the ’398 patent since before this Complaint was

filed, or at a minimum received notice of the ’398 patent upon filing of this Complaint, and are aware of their infringement of the ’398 patent.

75. Upon information and belief, Charter has indirectly infringed and continues to indirectly infringe at least claim 1 of the ’398 patent in violation of 35 U.S.C. § 271(b). From at least the time Charter received notice of the ’398 patent, Charter has induced others to infringe at least claim 1 of the ’398 patent under 35 U.S.C. § 271(b) by, among other things, and with specific intent or willful blindness, actively aiding and abetting others to infringe by encouraging end users (including clients, subscribers, and customers) to use and/or put the Spectrum Advanced Wi-Fi Service and Charter’s Spectrum WFAM products into service at the user’s premises. Charter’s end users directly infringe claim 1 when they cause Spectrum Advanced Wi-Fi Service and Charter’s Spectrum WFAM products to perform the steps of claim 1.

76. Defendants have induced infringement, and continue to induce infringement, of at least claim 1 of the ’398 patent in violation of 35 U.S.C. § 271(b). Defendants actively, knowingly, and intentionally induced, and continue to actively, knowingly, and intentionally induce, infringement of the ’398 patent; with the knowledge and intent that end users will make or use the Spectrum Advanced Wi-Fi service and Charter’s Spectrum WFAM products; and with the knowledge and intent to encourage and facilitate end users’ infringement through the distribution of the Spectrum Advanced Wi-Fi and Spectrum WFAM products and/or the creation and dissemination of promotional and marketing materials, supporting materials, instructions, product manuals, and/or technical information related to Spectrum Advanced Wi-Fi, such as:

https://www.spectrum.com/contact-spectrum;
https://www.spectrum.net/support;
https://www.youtube.com/watch?v=XM5SQYs409s;
https://www.youtube.com/watch?v=5fu__UmzFqw; and
https://www.youtube.com/watch?v=c4b_zB_VvJc&t=4s.

77. Defendants have also contributed to, and continue to contribute to the infringement of claim 1 of the ’398 patent by making, using, offering to sell, selling, and/or importing the Spectrum Advanced Wi-Fi service and Spectrum WFAM products, including the Sagemcom Fast 5285 router, in violation of 35 U.S.C. § 271(c). Defendants make, use, offer to sell, sell, and/or import such products with the knowledge that they are especially designed for use in a patented system and/or for use in and constitute a material part of the method of claim 1, and are not a staple article of commerce suitable for substantial non-infringing use. For example, Defendants actively and knowingly sell WFAM products and equipment to their subscribers or customers, support those products with Spectrum Advanced Wi-Fi service, and provide customer support, installation, instruction materials, and/or other technical information to their respective customers for the use of such products as a component for use in the method of claim 1.

78. Charter’s infringement of the ’398 patent is willful and egregious. As set forth above, Defendants have had knowledge of the ’398 patent since before this Complaint was filed, or at a minimum received notice of the ’398 patent upon filing of this Complaint, and are aware of their infringement of the ’398 patent. Among other things, ASSIA informed Charter by letter in November 2019 that Charter was benefiting from the use of ASSIA’s patented technology in the products and services that Charter provides to its customers, including those set forth in this Complaint.

79. ASSIA informed Charter that ASSIA’s technology was covered by multiple patents and invited Charter to have discussions to conclude a license to the ASSIA patent portfolio, which include the Asserted Patents. As a result of the past dealings and interactions and communications between ASSIA and Charter, *inter alia*, Charter (1) had knowledge of, or was willfully blind to, the existence of the ’398 patent and (2) had knowledge of, or was willfully blind to the fact, that

Charter Communications, Inc.
Exhibit 1005
Page #35

its conduct constituted infringement, induced, and/or contributed to infringement of the ’398 patent.

80. As a result of Charter’s infringement of the ’398 patent, ASSIA has suffered monetary damages and is entitled to no less than a reasonable royalty for Charter’s use of the claimed inventions of the ’398 patent, together with interest and costs as determined by the Court. ASSIA will continue to suffer damages in the future.

81. Charter does not have any rights to use the ’398 patent as alleged in this Complaint.

82. ASSIA has complied with 35 U.S.C. § 287.

83. ASSIA’s Asserted Patents are publicly available from the United States Patent Office and other online resources such as Google Patents.

84. Charter’s acts of direct and indirect infringement have caused and continues to cause damage to ASSIA. ASSIA is entitled to damages in accordance with 35 U.S.C. §§ 271, 281, and 284 sustained as a result of Charter’s wrongful acts in an amount to be proven at trial.

COUNT III: INFRINGEMENT OF THE ’654 PATENT

85. ASSIA incorporates by reference and re-alleges the foregoing paragraphs as if fully set forth herein. ASSIA further alleges the below upon information and belief.

86. Defendants and their customers have infringed and continue to infringe the ’654 patent, either literally or under the doctrine of equivalents, including at least claim 18, under 35 U.S.C. § 271(a), by making, using, offering to sell, and/or selling within the United States, and/or importing into the United States, systems including networks, wireless gateways, routers, modems, servers, databases, and/or other devices that support OpenSync for providing Spectrum Advanced Internet and WiFi service (collectively, these systems are referred to herein as “the Spectrum Advanced Internet and WiFi system”). *See* Charter Communications*, Charter Adopts OpenSync – The Fastest Growing Open-Sourced Framework – For Spectrum’s Advanced In-Home WiFi* (Nov.

11, 2019), available at https://corporate.charter.com/newsroom/charter-adopts-opensync-the-fastest-growing-open-sourced-framework-for-spectrums-advanced-in-home-wifi, [hereinafter Charter OpenSync Press Release].

87. For example, Claim 18 of the ’654 patent reads as follows:

> 18. A system comprising: a database; and a server coupled to the database, the server operable to:
>
> receive WAN performance information from a downloadable agent, wherein the downloadable agent is executable on a computing device coupled to a LAN of a broadband subscriber, wherein the LAN is coupled by another device to a WAN; and
>
> store the WAN performance information in the database associated with the server,
>
> analyze the WAN performance information to generate an analysis result, the analysis result comprises at least throughput; and
>
> report the analysis result to at least one of the broadband subscriber and the broadband subscriber's service provider;
>
> wherein the server is operable to receive an on-demand change request associated with at least one of: throughput, or latency.

88. The following paragraphs, images, and quotes demonstrate how claim 18 of the ’654 patent is infringed by the Spectrum Advanced Internet and WiFi system, which incorporates and utilizes OpenSync to provide Spectrum Advanced Internet and WiFi service.

89. All highlighting and annotations in the images below have been added.

90. The network management system deployed by Charter is a customized cloud-based system, outlined in the Cable-Tec Expo 2020 paper “*Streaming Telemetry Data from the Home Network using OpenWrt Access CPE*”. The system integrates OpenSync technology, which may include technologies like Plume’s HomePass (details in Plume’s *HomePass*, https://content.plume.com/v/homepass-datasheet), or similar technologies for broadband consumers, and is complemented by Plume’s Haystack for service providers (further information

in Plume's *Haystack*, https://content.plume.com/v/haystack-overview-datasheet). The integration of these technologies, as indicated in the Plume HomePass product data sheet, demonstrates the ability to "gain end-to-end network visibility with Haystack", indicating these two technologies are integrated and deployed together by service providers. Moreover, a Plume press release titled 'Charter Adopts OpenSync,' dated November 11, 2019, highlights a partnership with Charter for Internet/Wi-Fi technology, available at https://www.plume.com/serviceproviders/news/press-release/2019/11/charter-adopts-opensync-2/. Additionally, the OpenSync software, developed by Plume (originally known as Plume Middle Layer or PML), is a part of both the HomePass and Haystack systems, as detailed in the OpenSync 3.4 Overview, EUB-020-013-001 (Jan. 5, 2022), https://static1.squarespace.com/static/5bbce542d7819e023f203f03/t/620a2621b5a0b11a2c1e185f/1644832292301/EUB-020-013-001_OpenSync_34_Overview.pdf

91. Cable-Tec Expo 2020 paper entitled "*Streaming Telemetry Data from the Home Network using OpenWrt Access CPE*", authored by senior engineers and developers at Charter, provides detailed descriptions and figures to illustrate such a system, as implemented by Charter. The Spectrum Advanced Internet and WiFi system is a system that incorporates OpenSync technology such as Plume's HomePass or similar technology in conjunction with Plume's Haystack or similar technology. OpenSync is developed by Plume. OpenSync was originally known as Plume Middle Layer or PML.

92. The Spectrum Advanced Internet and WiFi system includes a database and a server coupled to the database. The figure below shows Charter's OpenSync software architecture:

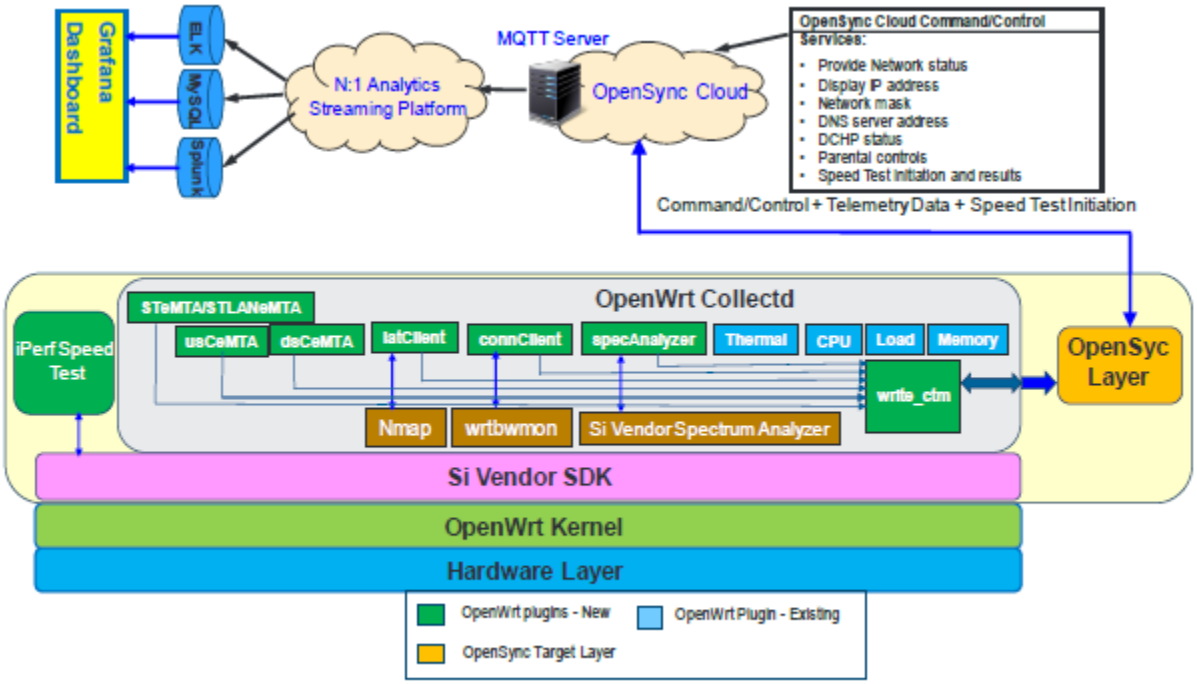

Figure 2: OpenWrt Integrated with OpenSync™ Software Architecture

Shlomo Ovadia et al., *Streaming Telemetry Data from the Home Network using OpenWrt Access CPE*, at 5, available at https://www.nctatechnicalpapers.com/Paper/2020/2020-streaming-telemetry-data-from-the-home-network-using-openwrt-access-cpe/download, [hereinafter Charter Paper].

The MQTT Server and OpenSync Cloud in Charter's OpenSync software architecture constitute a server. ELK, MySQL, and Splunk are examples of databases coupled to that server.

93. Charter adopted OpenSync for its Spectrum Advanced Internet and Wi-Fi service at least as early as November 2019, including the OpenSync Cloud platform: "Advanced In-Home Wi-Fi provides Spectrum Internet and WiFi customers with the ability to optimize their home networks, offering both detailed insights and providing greater control of their connected devices to deliver an unmatched home WiFi experience," said Rich DiGeronimo, Charter's Chief Product and Technology Officer. "Integrating our core advanced technology and leading WiFi router with the OpenSync cloud platform and software stack allows us to nimbly deliver best-of-breed features and services. Approximately 300 million devices are connected to our vast network, and we take seriously our responsibility to deliver fast, reliable service, while protecting and securing our

customers' online private information." *See* Charter OpenSync Press Release.

94. The server in the Spectrum Advanced Internet and WiFi system is operable to receive WAN performance information from a downloadable agent, wherein the downloadable agent is executable on a computing device coupled to a LAN of a broadband subscriber, wherein the LAN is coupled by another device to a WAN. The OpenSync Layer software agent (orange) in the OpenSync Software Architecture is a downloadable agent. The "OpenWrt Collected" module (gray) in the OpenSync Software Architecture collects WAN performance information, such as DOCSIS upstream and downstream channel information used by the D3.1 eMTA, eMTALat, and other green-coded collected plugins/modules:

Green-coded collectd plugins descriptions:

1. **usCeMTA:** Software plugin to pull all the DOCSIS upstream channel information used by the D3.1 eMTA (RF level, channel frequency, etc.).
2. **dsCeMTA:** Software plugin to pull all the DOCSIS downstream channel information used by the D3.1 eMTA (RF level, channel frequency, etc.).
3. **latClient:** Software plugin that measures and reports the round-trip latency from the D3.1 eMTA to each of the wirelessly connected devices in the home network based on their IP address or MAC address as shown in Figure 1.
4. **connClient:** Software plugin that measures and reports the number of transmitted and received packets from each of the wirelessly connected devices in the home network.
5. **specAnalyzer:** Software plugin to obtain the RF downstream and upstream spectrum of the Access CPE device.
6. **eMTALat:** Software plugin that measures and reports the minimum, maximum, and average round-trip DOCSIS latency between the D3.1 eMTA and the connected CMTS. First, it initiates a trace-route command to get CMTS IPv4 and IPv6 addresses. Then, it starts ICMP request and reply commands to measure the DOCSIS latency between CM and CMTS and stores the test results in separate files for IPv4 andIPv6. The eMTALat plugin reads results from these files and send them to write_ctm plugin, which in turn sends the measured DOCSIS latency results to the OpenSync™ layer's SM (not shown in Figure 1).

Charter Paper at 6.

95. The OpenWrt Router executes a downloadable agent and comprises a computing device that is coupled to a Spectrum Advanced Internet and WiFi service subscriber's LAN and coupled to a WAN by another device, such as the D3.1eMTA cable modem shown below:

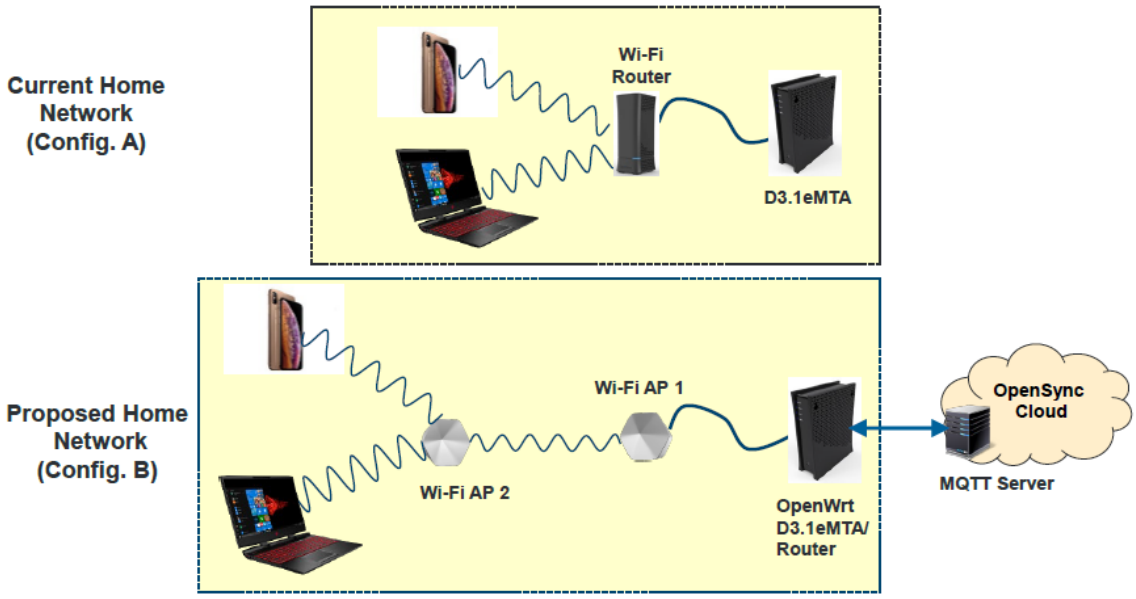

Figure 1: Current and Proposed Home Network Architecture Diagrams (Configurations A and B)

Charter Paper at 4.

96. Plume HomePass and Plume Haystack also demonstrate that Plume's HomePass and Haystack technologies are cloud-based. The collected WAN performance information, such as those detailed in various OpenSync documents, is transmitted from the gateway (where the OpenSync downloadable agent resides) to a system in the cloud, including a database and a server. This process is further elaborated in the OpenSync 5.6 Overview, published on December 7, 2023, available at https://opensync.atlassian.net/wiki/spaces/OCC/pages/39961722908/OpenSync+5.6.

See also, HomePass, available at https://content.plume.com/v/homepass-datasheet [hereinafter HomePass Datasheet]; *Haystack*, available at https://content.plume.com/v/haystack-overview-datasheet [hereinafter Haystack Datasheet].

97. The server in the Spectrum Advanced Internet and WiFi system is operable to store the WAN performance information in the database associated with the server. Charter's OpenSync software architecture shows that the databases are associated with the server via the N:1 Analytics Streaming Platform. Charter Paper, Fig. 2. Additionally, for example, a "Frontline" Tier 1 Support

feature of Haystack provides "performance measurement" that shows both current and historical performance information, i.e., "real-time and 7-day historic views":

Key features

Intuitive Interface

Tier 1 Support's easy-to-use system spotlights network and device issues, guides technicians through diagnostics, and provides clear calls to action.

Performance Measurement

Tier 1 Support tracks all device connectivity within the network and monitors overall network health continuously, with real-time and 7-day historic views.

Real-time Metrics

Access live data for broadband and pod speed, device connectivity, online status, and Wi-Fi environment for fast, accurate troubleshooting.

Quality of Experience

Tier 1 Support assigns a real-time QoE rating to every device in the network based on connectivity, device type, and environment. Underperforming client devices are flagged immediately for attention.

Engagement & Recommendation Engine

The Tier 1 Support recommendation engine analyzes detailed network data, summarizes issues, and suggests resolutions while support technicians engage with customers.

Frontline Tier 1 Support, at 1, available at https://content.plume.com/v/haystack-frontline-tier-1-support [hereinafter Frontline Tier 1 Support].

98. The server in the Spectrum Advanced Internet and WiFi system is operable to analyze the WAN performance information to generate an analysis result, where the analysis result comprises at least throughput. The Spectrum Advanced Internet and WiFi system's WAN performance information is analyzed to generate a result:

> Figure 4 shows the telemetry data path (current implementation) from the OpenWrt D3.1 eMTA to the Grafana dashboard via the cable MSO's Streaming and Analytics platform. The collected telemetry data is streamed in Protobuf format to the MQTT server hosted on the OpenSyncTM cloud, and then to the cable MSO's Streaming and Analytics platform.
>
> Cable MSO's future network architecture separates the control plane and the data plane as intelligence is no longer resident on hardware devices but rather on the network's software driven controllers **where network analytic models can act on traffic behaviors, services flows, and configuration state to predict and respond in near real-time to the networks changing demands.**

Charter Paper at 9 – 10. *See also*, *id. at* 16:

> A smart remote agent was developed and integrated with the OpenWrt software stack that enables the access CPE device to stream various types of telemetry data to the cable MSO's Streaming and Analytics platform via the MQTT server hosted on the OpenSync cloud for analysis, and displays the collected data on a hierarchical color-coded Grafana dashboard. The streaming telemetry data consists of a wide variety of information, including:
>
> • Access CPE system information
> • CM device information
> • Home network traffic information from all the wirelessly connected clients
> • DS/US DOCSIS channel information
> • DS/US RF spectrum output
> • Event and alarms information for the collected metrics
> • **Speed test results on both the WAN and LAN ports**
> • Voice metrics information
> • EBBU status information

Moreover, metrics such as "broadband (and pod) speed," serving as a proxy for "throughput," are analyzed for generating a range of analysis results, including performance measurement, recommendations, and quality of experience ratings. *See* Frontline Tier 1 Support.

99. The server in the Spectrum Advanced Internet and WiFi system is operable to report the analysis result to at least one of the broadband subscriber and the broadband subscriber's service provider. The server reports analysis results to both the broadband subscriber and the service provider.

> A smart remote agent was developed and integrated with the OpenWrt software stack that enables the access CPE device to stream various types of telemetry data to the cable MSO's Streaming and Analytics platform via the MQTT server hosted on the OpenSync™ cloud for analysis, and displays the collected data on a hierarchical color-coded Grafana dashboard. The streaming telemetry data consists of a wide variety of information, including:
>
> - Access CPE system information
> - CM device information
> - Home network traffic information from all the wirelessly connected clients
> - DS/US DOCSIS channel information
> - DS/US RF spectrum output
> - Event and alarms information for the collected metrics
> - Speed test results on both the WAN and LAN ports
> - Voice metrics information
> - EBBU status information

Charter Paper at 16.

100. The server also reports collected information on dashboards in the Network Operations Center (NOC), as shown in Figure 5 including telemetry on DOCSIS Channel Info:

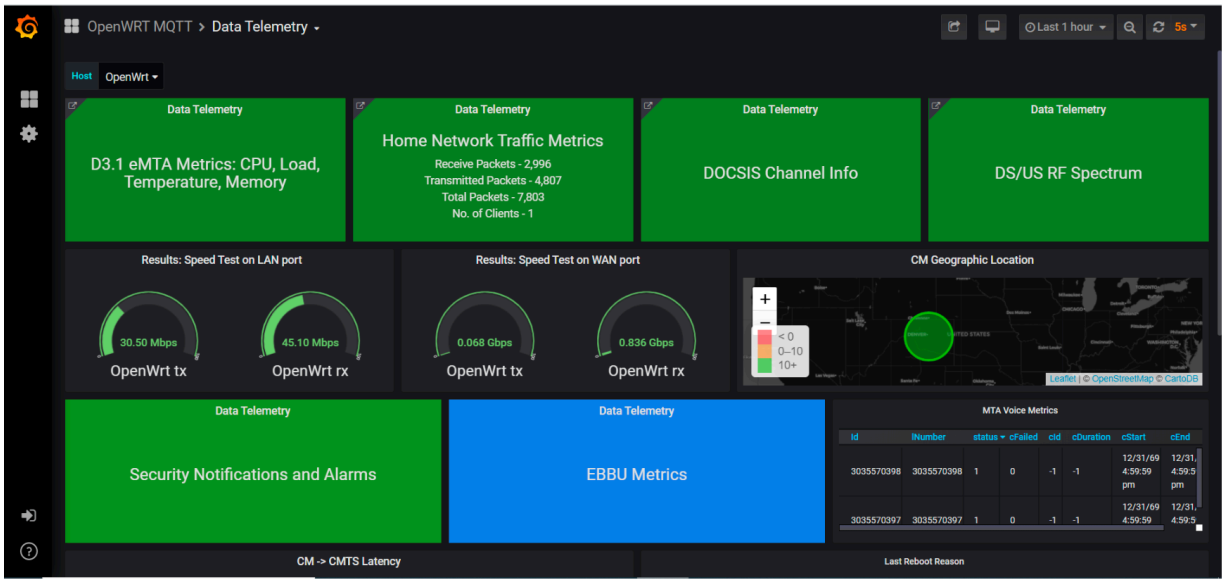

Figure 5:Hierarchical Color-Coded Grafana Dashboard with the Key Telemetry Components

Charter Paper at 12; *see* HomePass Datasheet for details on "The HomePass app > Complete smart home command center". *See also*, Frontline Tier 1 Support at 1.

101. Additionally, by way of example, in the case of the broadband subscriber, this can also be reported using the Spectrum website at https://www.spectrum.com/internet/speed-test, or by way of a mobile app.

> **Types of Spectrum Speed Tests**
>
> What type of Spectrum Speed Test you receive depends on your Spectrum Internet equipment.
>
> - In-home Advanced WiFi customers with modem's that have model numbers beginning with SAC or SAX will receive the download speeds of both their router and personal device.
> - Out-of-home Advanced WiFi customers will only receive the download speed of their router.

How to Conduct a Spectrum Speed Test, https://www.spectrum.net/support/internet/spectrum-speed-test.

The HomePass app ▸ Complete smart home command center

Customers can see, optimize, and control their WiFi network from a simple interface that enables Plume's growing array of Smart Home Services and makes alerting or troubleshooting a breeze, should issues arise.

Applications

Signal
The predictive intelligence tool that utilizes browser-based dashboards and applies AI to alert to, predict, and resolve subscriber issues.

Panorama
A comprehensive analytics dashboard built for customer lifecycle management. Panorama provides network-level insights, KPI tracking, and device and security analytics in a single view.

Frontline
A proactive support application that identifies customers in need, before they call you. Frontline is supported by autonomous self-help workflows, real-time diagnostics, and network performance tools.

QuerySight
SFTP interface access allows you to analyze and visualize data in your own Business Intelligence tool. With QuerySight, you will gain insights to understand your network and customers at a granular level.

Haystack Datasheet.

102. The server in the Spectrum Advanced Internet and WiFi system is operable to receive an on-demand change request associated with at least one of: throughput or latency. In response to a complaint, an iPerf speed test is performed based on collected telemetry. Changes can be made, for example, in the servers that control the customer's configuration:

4.1. iPerf Speed Test

The iPerf speed test is initiated from the OpenSync™ Network Operations Center (NOC). Submitting a speed test request from the NOC sends a message via Openflow to the access CPE device, and the speed test request is detected on the device by the speed test handler in the OpenSync™ DM. The speed test handler calls a script on the device that in turn invokes an iPerf3 speed test with a pre-defined set of arguments. The speed test is run once to collect the upstream test results, and once again to collect the downstream results. The speed test results from each test are saved to files on the Access CPE device. The STeMTA collectd plugin processes the speed test results from the files and delivers them to the MQTT server, as described in the STeMTA Plugin section. The ability to initiate the iPerf speed test from the OpenSync™ NOC and review the collected speed test results would be very helpful to the Cable operators' call center to quickly address customers' issues.

Charter Paper at 8.

103. Denying access, *e.g.*, time scheduled presets or parental control, is clearly a form of throughput control for a user. This on-demand change request (i.e., command/control) is received by the OpenSync Cloud, as shown in both Figure 2 (see element (a) above) as well as Figure 3 (see below) of Cable-Tec Expo 2020 paper entitled "*Streaming Telemetry Data from the Home Network using OpenWrt Access CPE*":

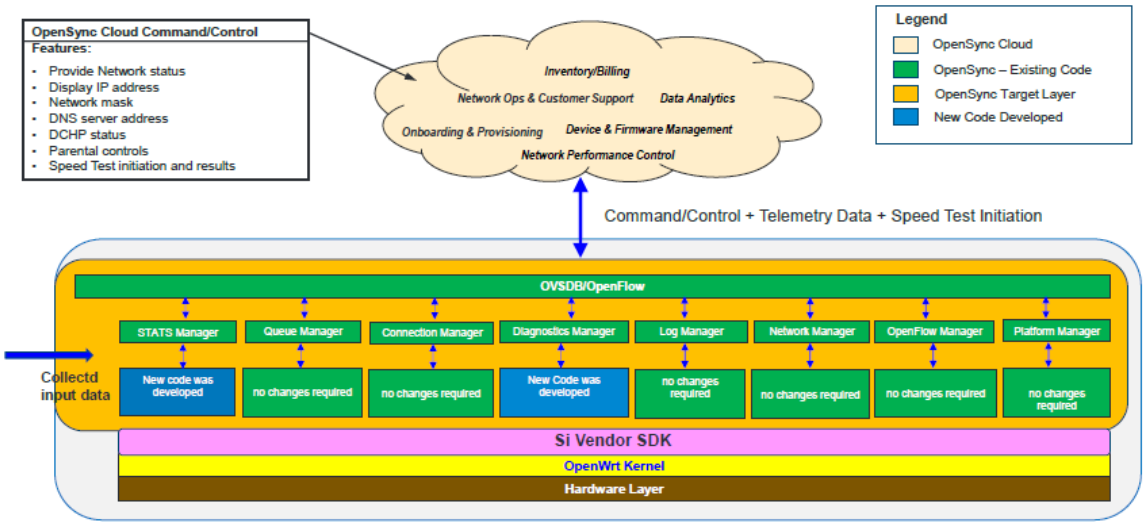

Figure 3: OpenSync™ Software Architecture with the Connectivity to the OpenSync™ Cloud

104. Defendants have had knowledge of the '654 patent since before this Complaint was filed, or at a minimum received notice of the '654 patent upon filing of this Complaint, and are aware of their infringement of the '654 patent.

105. Upon information and belief, Charter has indirectly infringed and continues to indirectly infringe at least claim 18 of the '654 patent in violation of 35 U.S.C. § 271(b). From at least the time Charter received notice of the '654 patent, Charter has induced others to infringe at least claim 18 of the '654 patent under 35 U.S.C. § 271(b) by, among other things, and with specific intent or willful blindness, actively aiding and abetting others to infringe by encouraging end users, including clients, subscribers, and customers, to use and/or put the Spectrum Service into service

at the user's premises. Charter's end users directly infringe claim 18 when they use the Spectrum Service by operating, configuring, and otherwise using the Spectrum Service as well as put the Spectrum System into service and exercise control over the Spectrum Service equipment and obtain benefits from its application, such as enjoying efficient use of Wi-Fi at their premises.

106. In particular, Defendants actively, knowingly, and intentionally induced, and continue to actively, knowingly, and intentionally induce, infringement of the '654 patent; with the knowledge and intent that end users will make or use Charter's Spectrum Advanced Internet and WiFi service; and with the knowledge and intent to encourage and facilitate end users' infringement through the distribution of Spectrum Advanced Internet and WiFi service and/or the creation and dissemination of promotional and marketing materials, supporting materials, instructions, product manuals, and/or technical information related to Spectrum Advanced Internet and WiFi service, such as:

https://www.spectrum.com/contact-spectrum;
https://www.spectrum.net/support;
https://www.youtube.com/watch?v=XM5SQYs409s;
https://www.youtube.com/watch?v=5fu__UmzFqw; and
https://www.youtube.com/watch?v=UhMo3IqQn1E.

107. Charter does so knowing that its customers will commit these infringing acts. Despite its knowledge of the '654 patent, Charter continues to make, use, sell, and/or offer for sale its infringing products thereby specifically intending for and inducing its customers to infringe the '654 patent.

108. Defendants have also contributed to, and continue to contribute to the infringement of claim 18 of the '654 patent by making, using, offering to sell, selling, and/or importing the components of the Spectrum Advanced Internet and WiFi service, including networks, wireless gateways, routers, modems, servers, and/or other devices, in violation of 35 U.S.C. § 271(c).

Defendants make, use, offer to sell, sell, and/or import such products with the knowledge that they are especially designed for use in and constitute a material part of the system of claim 18 and are not a staple article of commerce suitable for substantial non-infringing use. For example, Defendants actively and knowingly supply devices, such as servers, that support OpenSync for providing Spectrum Advanced Internet and WiFi service and provide customer support, installation, instruction materials, and/or other technical information to end users for the use of such products as a component of the system of claim 18.

109. Charter's infringement of the '654 patent is willful and egregious. As set forth above, Defendants have had knowledge of the '654 patent since before this Complaint was filed, or at a minimum received notice of the '654 patent upon filing of this Complaint, and are aware of their infringement of the '654 patent. Among other things, ASSIA informed Charter by letter in November 2019 that Charter was benefiting from the use of ASSIA's patented technology in the products and services that Charter provides to its customers, including those set forth in this Complaint.

110. ASSIA informed Charter that ASSIA's technology was covered by multiple patents and invited Charter to have discussions to conclude a license to the ASSIA patent portfolio, which include the Asserted Patents. As a result of the past dealings and interactions and communications between ASSIA and Charter, *inter alia*, Charter (1) had knowledge of, or was willfully blind to, the existence of the '654 patent and (2) had knowledge of, or was willfully blind to the fact, that its conduct constituted infringement, induced, and/or contributed to infringement of the '654 patent.

111. As a result of Charter's infringement of the '654 patent, ASSIA has suffered monetary damages and is entitled to no less than a reasonable royalty for Charter's use of the

Charter Communications, Inc.
Exhibit 1005
Page #48

claimed inventions of the ’654 patent, together with interest and costs as determined by the Court. ASSIA will continue to suffer damages in the future.

112. Charter does not have any rights to use the ’654 patent as alleged in this Complaint.

113. ASSIA has complied with 35 U.S.C. § 287.

114. ASSIA’s Asserted Patents are publicly available from the United States Patent Office and other online resources such as Google Patents.

115. Charter’s acts of direct and indirect infringement have caused and continues to cause damage to ASSIA. ASSIA is entitled to damages in accordance with 35 U.S.C. §§ 271, 281, and 284 sustained as a result of Charter’s wrongful acts in an amount to be proven at trial.

COUNT IV: INFRINGEMENT OF THE ’108 PATENT

116. ASSIA incorporates by reference and re-alleges the foregoing paragraphs as if fully set forth herein. ASSIA further alleges the below upon information and belief.

117. Defendants and their customers have infringed and continue to infringe the ’108 patent, either literally or under the doctrine of equivalents, including at least claim 1 under 35 U.S.C. § 271(a), by making, using, offering to sell, and/or selling within the United States, and/or importing into the United States, devices including gateways, routers, bridges, cable modems, and/or other network devices that provide LAN and WAN interfaces for Spectrum Advanced Internet and WiFi service (collectively, these devices are referred to herein as “Charter’s LAN/WAN devices”). *See* Charter OpenSync Press Release.

118. Upon information and belief, Charter had knowledge of the ’108 patent, for example, because an application that the ’108 patent issued from (i.e., US200140321298A1) was cited in Charter’s own U.S. Patent No. 11,109,082, attached as Exhibit 5. Accordingly, upon information and belief, prior to the filing of this lawsuit, Charter had actual knowledge of the ’108 patent and the infringing nature of its services.

119. The following paragraphs, images, and quotes, demonstrate how claim 1 of the ’108 patent is infringed by Charter’s LAN/WAN devices which incorporate and utilize OpenSync to provide Spectrum Advanced Internet and WiFi service. All highlighting and annotations in the images below have been added.

120. For example, Claim 1 of the ’108 patent reads as follows:

> 1. A management device, comprising:
>
> a Local Area Network (LAN) interface to communicably interface the management device with a LAN;
>
> a Wide Area Network (WAN) interface to communicably interface the management device with a WAN, wherein the WAN is to provide broadband connectivity to the LAN;
>
> one or more processors; and
>
> a non-transitory computer-readable medium or media storing one or more sequences of instructions which, when executed by at least one of the one or more processors, cause the management device to perform operations comprising:
>
> collecting LAN information from one or more communication layers on the LAN; and
>
> identifying one or more operational conditions within the WAN in a different communication layer from the one or more communication layers on the LAN by analyzing at least the collected LAN information.

121. The following paragraphs, images, and quotes, demonstrate how claim 1 of the ’108 patent is infringed by Charter’s LAN/WAN devices which incorporate and utilize OpenSync to provide Spectrum Advanced Internet and WiFi service. All highlighting and annotations in the images below have been added.

122. Each Charter LAN/WAN device is a management device. Senior engineers and developers at Charter provided detailed descriptions and figures in the Charter Paper referenced above. Figure 2 of the Charter Paper is reproduced below.

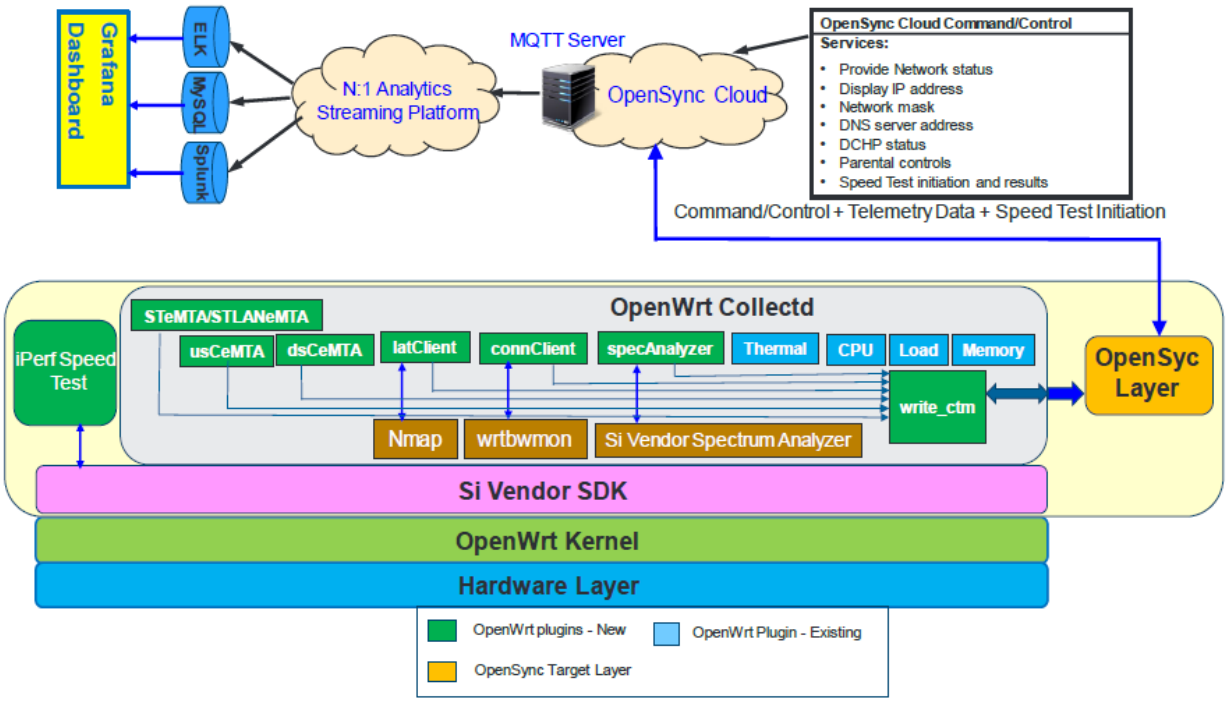

Figure 2: OpenWrt Integrated with OpenSync™ Software Architecture

123. Charter adopted OpenSync for its Spectrum Advanced in-home Wi-Fi service at least as early as November 2019, including the OpenSync Cloud platform:

> Advanced In-Home Wi-Fi provides Spectrum Internet and WiFi customers with the ability to optimize their home networks, offering both detailed insights and providing greater control of their connected devices to deliver an unmatched home WiFi experience," said Rich DiGeronimo, Charter's Chief Product and Technology Officer. "Integrating our core advanced technology and leading WiFi router with the OpenSync cloud platform and software stack allows us to nimbly deliver best-of-breed features and services. Approximately 300 million devices are connected to our vast network, and we take seriously our responsibility to deliver fast, reliable service, while protecting and securing our customers' online private information.

Charter OpenSync Press Release.

> OpenSync has developed a fully-functioning and thriving environment in its four years:
>
> - 2019
> - Launch of OpenSync-enabled gateways into the largest CSPs in North America (Charter Communications, Bell Canada), Japan (J:COM), UK (Virgin Media), and many other operators in Europe…

OpenSync is making proprietary software a thing of the past, Wi-Fi NOW Global (Oct. 20, 2022),

available at https://syndicated.wifinowglobal.com/resource/opensync-is-making-proprietary-software-a-thing-of-the-past.

124. Charter's devices, which include gateways, routers, and cable modems that implement OpenSync, are equipped with a Flow Control Manager (FCM). This is elaborated in the document *OpenSync LAN Statistics*, dated February 9, 2021, which discusses the functionality of FCM across pages 6–8. *See OpenSync LAN Statistics* (Feb. 9, 2021), available at https://static1.squarespace.com/static/5bbce542d7819e023f203f03/t/6024de7c87d7df2a609ea1a2/1613028988943/ERE-021-020-501_OpenSync_LAN_Statistics.pdf [hereinafter OpenSync LAN Statistics]. The Flow Control Manager (FCM) on Charter's LAN/WAN devices can take the form of a software module. *Id.* Thus, Charter's devices on which an FCM or similar management component resides is a management device.

125. Each Charter LAN/WAN device has a Local Area Network (LAN) interface to communicably interface the management device, *e.g.*, the FCM, with a LAN. The FCM resides on Charter LAN/WAN devices that include a LAN interface, such as a cable modem, gateway and/or router, and is connected to both a subscriber LAN and a WAN (e.g., a broadband network). As its name indicates, the LAN Statistics document deals with LANs, typically WLANs, and it describes the types of statistics that must be collected from these WLANs: "The *OpenSync* component responsible for LAN statistics is Flow Control Manager (FCM). FCM uses filters applied to the network flows to include or exclude the captured data." OpenSync LAN Statistics at 3. Each Charter LAN/WAN device collects LAN statistics via its LAN interface. "LAN statistics represent the characteristics of network traffic flows that occur between … Clients in (W)LAN network and devices in WAN network. … The collected data serves as an accurate count of the WAN data consumption, helps monitor the WAN-side data saturation, and provides load indication for each network within a SSID." *Id. See also*, Spectrum, *Spectrum WiFi 6 Router User Guide*, at 5 (Jan.

7, 2021), available at https://d15yx0mnc9teae.cloudfront.net/sites/default/files/WiFi-6-Guide-1-7-21.pdf [hereinafter Spectrum WiFi 6 Router User Guide], depicting LAN and WAN ports indicating the existence of LAN and WAN interfaces:

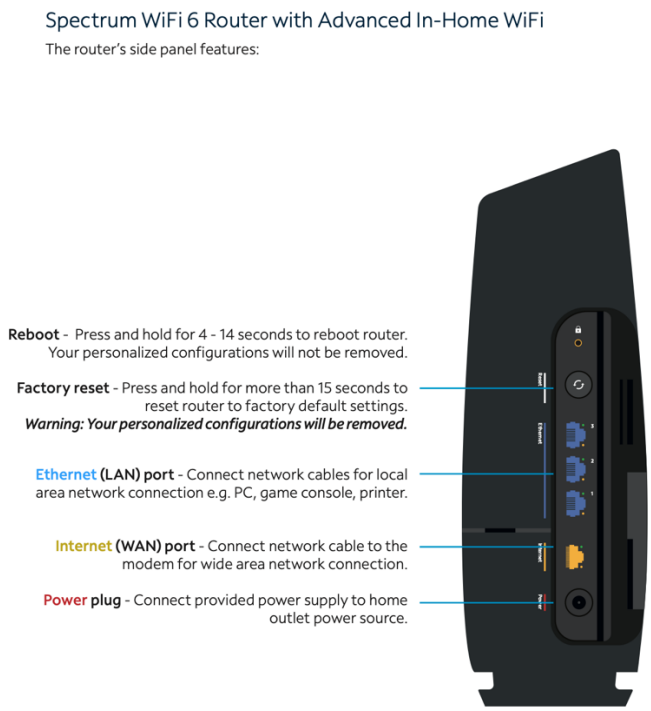

126. As its name indicates, the OpenSync LAN Statistics document describes the types of statistics that must be collected from these WLANs:

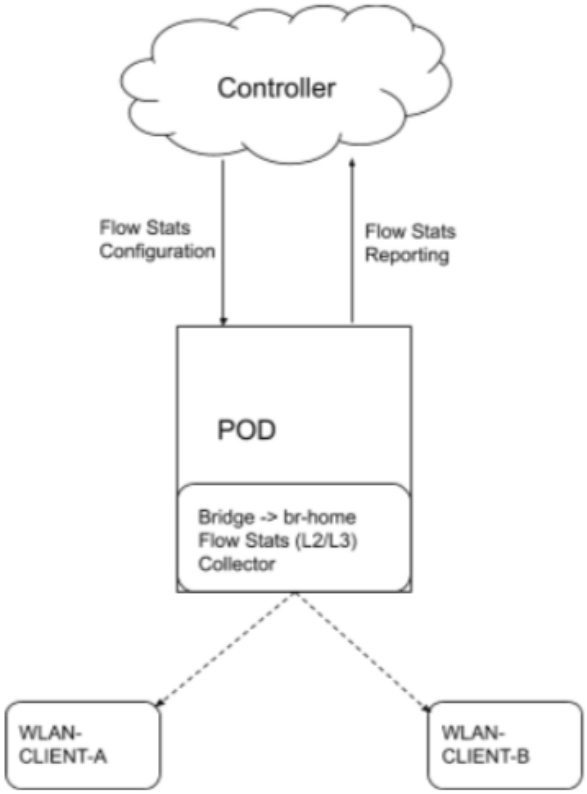

OpenSync LAN Statistics at 4.

The Charter LAN/WAN devices also include a WAN interface, and are connected to both a subscriber LAN and a WAN (e.g., a broadband network). The introduction to the OpenSync LAN Statistics document (p. 3) refers to the relationship between LAN and WAN, where WAN refers to the broadband network that provides connectivity to the WLANs, and explains that the one of the purposes of collecting LAN statistics data is to monitor the operation of the WAN:

Introduction

LAN statistics represent the characteristics of network traffic flows that occur between:

- Various end-clients in LAN and WLAN networks
- Clients in (W)LAN network and devices in WAN network.

Generally speaking, LAN statistics tell us which nodes talk to each other, when, how much data, and what types of data are shared among the nodes.

The collected data serves as an accurate count of the WAN data consumption, helps monitor the WAN-side data saturation, and provides load indication for each network within a SSID.

OpenSync LAN Statistics at 3. *See also*, Spectrum WiFi 6 Router User Guide at 5, depicting LAN and WAN ports indicating the existence of LAN and WAN interfaces:

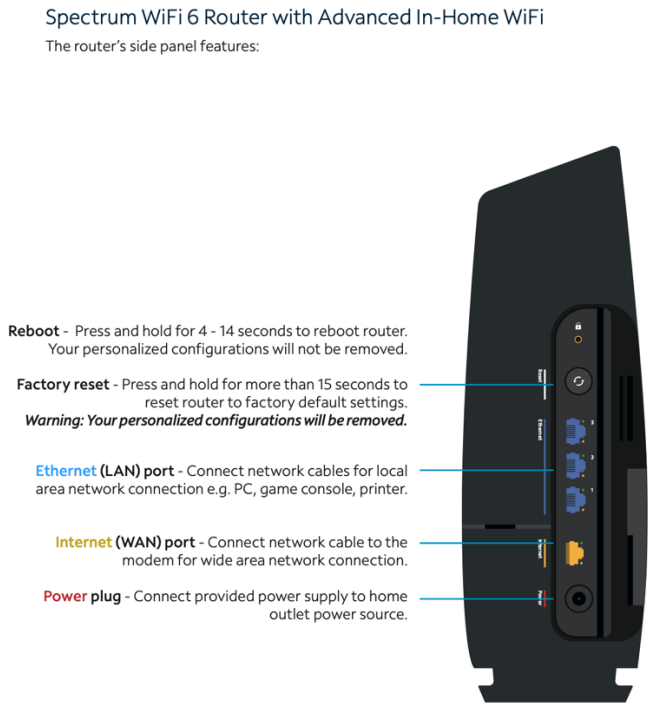

127. Each Charter LAN/WAN device has a Wide Area Network (WAN) interface to communicably interface the management device with a WAN, wherein the WAN is to provide broadband connectivity to the LAN. Each Charter LAN/WAN device has an interface to communicably interface with the Charter broadband network, which is a WAN. The FCM "[c]ollects and reports the IP flow statistics occurring between devices in a LAN network to devices in a WAN network, and vice-versa." OpenSync LAN Statistics at 7. The Charter LAN/WAN devices communicate with the WAN (i.e., Charter's broadband network) through a WAN interface. Charter's Advanced Internet and WiFi service provides broadband connectively to subscribers' LANs.

128. Each Charter LAN/WAN device incorporates processors and non-transitory computer-readable media for operational instructions. These components enable the devices to

perform various functions as defined in their programming. Specifically, Charter's customer equipment, including cable modems, gateways, and routers, along with their cloud servers, are designed with processors and memory that support the execution of these instructions, facilitating the operations of the Flow Control Manager (FCM). Key details about these capabilities, such as "802.11ax WiFi 6 chipsets with higher *processing power*" and the router's reboot process, "**Reboot** - Press and hold for 4 - 14 seconds to reboot router. Your personalized configurations will not be removed", are described in Spectrum WiFi 6 Router with Advanced In-Home WiFi, at 5 and 7, Spectrum WiFi 6 Router User Guide.

129. Each Charter LAN/WAN device stores instructions for causing it to perform the operation of collecting LAN information from one or more communication layers on the LAN. The LAN information includes Layer 2 information ("LAN-to-LAN Stats Plugin") and Layer 3 information ("IP Flow Stats Plugin"):

> FCM Plugins
>
> FCM supports multiple plugins, so that different types of LAN statistics collection/reporting methods can be separately managed by the Cloud. Currently, FCM supports these plugins:
>
> - Lan-to-Lan Stats Plugin. Collects and reports the layer 2 network statistics occurring between devices within a LAN network.
> - IP Flow Stats Plugin. Collects and reports the IP flow statistics occurring between devices in a LAN network to devices in a WAN network, and vice-versa.
> - Per-interface Bandwidth Stats Plugin. Tracks the total bandwidth consumed on all wired and wireless interfaces.

OpenSync LAN Statistics at 7.

130. The OpenSync "Grafana Dashboard" reflects FCM's the collection of the WAN information (highlighted in yellow) and the LAN information (highlighted in green):

A. D3.1 eMTA Router system information such as:
   - CPU utilization (%) in a given time period
   - Free system memory (%) in a given time period
   - System load (%) in a given time period
   - Networking information such as IP address, network mask, DHCP status, etc.
   - Instantaneous and average system temperature in a given time period
   - Average, minimum, and maximum round-trip IPv4 and IPv6 latency in a selected period of time to the CMTS

B. Home network traffic from all the wirelessly connected devices via the Pods or Access Points:
   - IPv4/IPv6 of the wirelessly connected client in home network
   - Number of transmitted and received packets for each device
   - IPv4/IPv6 round-trip latency between the D3.1 eMTA and each of the connected clients

C. Cable modem Downstream/Upstream channel information, including:
   - Downstream channel information (i.e., channel ID, channel type, lock status, channel bonding status, received power level, SNR/MER, channel center frequency, channel width, modulation profile, etc.) – see Figure 9.
   - Upstream channel information (i.e., channel ID, Transmit power level, channel center frequency, channel width, channel bonding status, etc.)

D. RF downstream and upstream spectrum information – downstream/upstream RF signal power (dBmV) vs. frequency (MHz).

E. Downstream/Upstream speed test results on the WAN port (i.e., iPerf server in the cable MSO's cloud) and the LAN port (i.e., between iPerf server running on D3.1 eMTA and the connected home network's client).

Charter Paper at 11. "The collected component gathers metrics from various sources, e.g. the operating system, applications, log-files and external devices, and stores this information or makes it available over the network. Those statistics can be used to monitor systems, find performance bottlenecks (i.e. *performance analysis*) and predict future system load (i.e. *capacity planning*)." *Id.* at 6.

131. Each Charter FCM device stores instructions for causing it to perform the operation of identifying an operational condition within the WAN in a different communication layer from the one or more communication layers on the LAN by analyzing at least the collected LAN information. For example, "[t]he collected data serves as an accurate count of the WAN data consumption, helps monitor the WAN-side data saturation, and provides load indication for each network within a SSID." OpenSync LAN Statistics at 3. This indicates that the FCM monitors how close the WAN data connection is to saturation. To achieve this, the FCM knows the current

capacity of the WAN (e.g., provided as Layer 3 information), as well as the amount of data that the LAN is currently requesting, which includes collecting and reporting Layer 2 data. *Id*. at 7. In this example, the "operational condition within the WAN" is the "WAN-side data saturation" in Layer 3, which is different than at least one of the communication layers for which LAN information is collected in Layer 2.

132. Defendants have had knowledge of the '108 patent since before this Complaint was filed, or at a minimum received notice of the '108 patent upon filing of this Complaint, and are aware of their infringement of the '108 patent.

133. Upon information and belief, Charter has indirectly infringed and continues to indirectly infringe at least claim 1 of the '108 patent in violation of 35 U.S.C. § 271(b). From at least the time Charter received notice of the '108 patent, Charter has induced others to infringe at least claim 1 of the '108 patent under 35 U.S.C. § 271(b) by, among other things, and with specific intent or willful blindness, actively aiding and abetting others to infringe by encouraging end users, including clients, subscribers, and customers, to use and/or put the Charter LAN/WAN devices into service at the user's premises. Charter's end users directly infringe claim 1 when they install, configure and/or use the Charter LAN/WAN devices as well as put the Charter LAN/WAN devices into service and exercise control over the Charter LAN/WAN devices and obtain benefits from its application, such as enjoying and benefitting from high-speed Internet access over local networks.

134. In particular, Defendants actively, knowingly, and intentionally induced, and continue to actively, knowingly, and intentionally induce infringement of the '108 patent; with the knowledge and intent that end users will make or use Charter's LAN/WAN devices; and with the knowledge and intent to encourage and facilitate end users' infringement through the distribution, installation, and use of the Charter LAN/WAN devices and/or the creation and dissemination of

Charter Communications, Inc.
Exhibit 1005
Page #58

promotional and marketing materials, supporting materials, instructions, product manuals, firmware, and/or technical information related to Spectrum Service, such as:

https://www.spectrum.com/contact-spectrum;
https://www.spectrum.net/support;
https://www.youtube.com/watch?v=XM5SQYs409s;
https://www.youtube.com/watch?v=5fu__UmzFqw; and
https://www.youtube.com/watch?v=UhMo3IqQn1E.

135. Charter does so knowing that its customers will commit these infringing acts. Despite its knowledge of the '108 patent, Charter continues to make, use, sell, and/or offer for sale its infringing products thereby specifically intending for and inducing its customers to infringe the '108 patent.

136. Defendants have also contributed to, and continue to contribute to the infringement of claim 1 of the '108 patent by making, using, offering to sell, selling, and/or importing the components of Charter's LAN/WAN devices that support OpenSync, including firmware, networks, gateways, routers, cable modems, servers, and/or other network devices, in violation of 35 U.S.C. § 271(c). Defendants make, use, offer to sell, sell, and/or import such products with the knowledge that they are especially designed for use and constitute a material part of the system of claim 1, and are not a staple article of commerce suitable for substantial non-infringing use. For example, Defendants actively and knowingly sell components of the Spectrum Advanced Internet and WiFi service that support OpenSync and provide customer support, installation, instruction materials, and/or other technical information to their end users for the use of such products as a component of the system of claim 1.

137. Charter's infringement of the '108 patent is willful and egregious. As set forth above, Defendants have had knowledge of the '108 patent since before this Complaint was filed, or at a minimum received notice of the '108 patent upon filing of this Complaint, and are aware of

their infringement of the ’108 patent. Among other things, ASSIA informed Charter by letter in November 2019 that Charter was benefiting from the use of ASSIA’s patented technology in the products and services that Charter provides to its customers, including those set forth in this Complaint.

138. ASSIA informed Charter that ASSIA’s technology was covered by multiple patents and invited Charter to have discussions to conclude a license to the ASSIA patent portfolio, which include the Asserted Patents. As a result of the past dealings and interactions and communications between ASSIA and Charter, *inter alia*, Charter (1) had knowledge of, or was willfully blind to, the existence of the ’108 patent and (2) had knowledge of, or was willfully blind to the fact, that its conduct constituted infringement, induced, and/or contributed to infringement of the ’108 patent.

139. As a result of Charter’s infringement of the ’108 patent, ASSIA has suffered monetary damages and is entitled to no less than a reasonable royalty for Charter’s use of the claimed inventions of the ’108 patent, together with interest and costs as determined by the Court. ASSIA will continue to suffer damages in the future.

140. Charter does not have any rights to use the ’108 patent as alleged in this Complaint.

141. ASSIA has complied with 35 U.S.C. § 287.

142. ASSIA’s Asserted Patents are publicly available from the United States Patent Office and other online resources such as Google Patents.

143. Charter’s acts of direct and indirect infringement have caused and continues to cause damage to ASSIA. ASSIA is entitled to damages in accordance with 35 U.S.C. §§ 271, 281, and 284 sustained as a result of Charter’s wrongful acts in an amount to be proven at trial.

Charter Communications, Inc.
Exhibit 1005
Page #60

COUNT II: INFRINGEMENT OF THE '313 PATENT

144. ASSIA incorporates by reference and re-alleges the foregoing paragraphs as if fully set forth herein. ASSIA further alleges the below upon information and belief.

145. Defendants and their customers have infringed and continue to infringe the '313 patent, either literally or under the doctrine of equivalents, including at least claim 1, under 35 U.S.C. § 271(a), by making, using, offering to sell, and/or selling within the United States, and/or importing into the United States, its Spectrum Internet and Advanced WiFi Services, including servers, routers and controllers such as the Sagemcom Fast 5285 router, which implement the Wi-Fi Agile Multiband specification (collectively, "the Spectrum WFAM products"), to provide Spectrum Advanced Wi-Fi to subscribers. *See, e.g.*, Spectrum, *Spectrum Advanced WiFi: Gain Complete Control Over Your WiFi*, available at https://www.spectrum.com/internet/wifi-service/spectrum-advanced-wifi (last visited Jan. 19, 2024).

146. Charter (including its agents) install and test Spectrum WFAM products in subscribers' homes and/or businesses and thereby cause the performance of the method steps of claim 19. In addition, Charter conditions subscribers' participation in the Spectrum Advanced Wi-Fi service and receipt of benefits of using the Spectrum Advanced Wi-Fi service upon performing the steps of claim 1 and establishes the manner and timing of that performance by requiring that the Spectrum WFAM products comply with the Wi-Fi Agile Multiband specification.

147. For example, Claim 19 of the '313 patent reads as follows:

19. A method for managing a plurality of networks, the method comprising:

> receiving, by a server, from network monitoring devices that monitor data associated with an operation of two or more communication units located in at least two networks within the plurality of networks, the data comprising a parameter;
>
> processing, by the server, the received data;

Charter Communications, Inc.
Exhibit 1005
Page #61

based on the processed data, determining a policy for at least one of the two or more communication units; and

in response to the server detecting a degradation of network performance in at least one network within the plurality of networks, communicating the policy to at least one or more communication units that implement one or more algorithms that use the parameter and at least one rule or one condition for the one or more communication units to improve a performance of the one or more communication units.

148. The following paragraphs, images, and quotes demonstrate how claim 19 of the ’313 patent is infringed by the use of Spectrum WFAM products, which implement the Wi-Fi Agile Multiband specification to provide or receive Spectrum Advanced Wi-Fi service. All highlighting and annotations in the images below have been added.

149. The Spectrum Advanced Wi-Fi service and Spectrum WFAM products improve the performance of one or more communication units. As one example, the Sagemcom Fast 5285 router, for example, is certified by the Wi-Fi Alliance as compliant with “Spectrum & Regulatory Wi-Fi Agile Multiband WMM.” The Wi-Fi Alliance website touts: “Wi-Fi CERTIFIED Agile Multiband facilitates better management of Wi-Fi network environments and enables Wi-Fi devices to better respond to changing Wi-Fi network conditions. Improved resource utilization helps balance Wi-Fi network load, increase capacity, and provide end users the best possible Wi-Fi experience.” WiFi Alliance, *Wi-Fi Agile Multiband*, available at https://www.wi-fi.org/discover-wi-fi/wi-fi-agile-multiband (last visited Jan. 19, 2024). As shown in the Wi-Fi Agile Multiband topology below, client STAs are communication units associated with one or more access points (APs):

2.2 Topology

The topology of a Wi-Fi Agile Multiband wireless infrastructure network may vary based on components and deployment requirements. This section illustrates two typical topologies based on the components identified in section 2.1.

Figure 1 depicts the system topology for connecting Wi-Fi Agile Multiband devices.

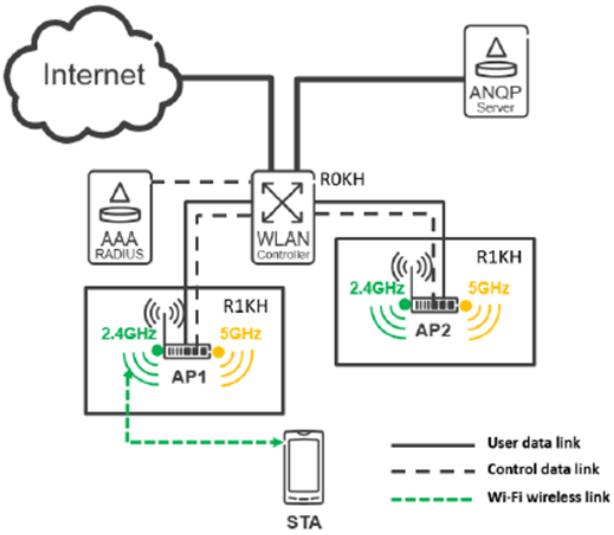

Figure 1. Wi-Fi Agile Multiband wireless infrastructure network

Wi-Fi Alliance, *Wi-Fi Agile Multiband Technical Specification v1.5,* at 9, (2020) [hereinafter Wi-Fi Agile Multiband Technical Specification].

150. Spectrum Advanced Wi-Fi service and the Spectrum WFAM products include a server that receives from network monitoring devices that monitor data associated with an operation of two or more communication units located in at least two networks within the plurality of networks, the data comprising a parameter. Sagemcom Fast 5285 routers correspond to the access points (APs) in the Wi-Fi Agile Multiband topology above. The APs include both servers and network monitoring devices that provide data (e.g., Beacon reports) from connected communication units (STAs). The dual-band APs monitor data associated with the operation of two or more communication units (STAs) in both the 2.4 GHz and 5 GHz networks. These distinct networks are configured differently and devices on each respective network require the AP to communicate with one another.

2.3.3 Required IEEE 802.11 capabilities

This section specifies additional IEEE 802.11 capabilities that Wi-Fi Agile Multiband APs and Wi-Fi Agile Multiband STAs shall support.

A Wi-Fi Agile Multiband AP shall support the following capabilities:

- ANQP response with Neighbor Report ANQP-element
- Neighbor Report element with BSS Transition Candidate Preference subelement
- BTM Request frame with:
  - BSS Transition Candidate List Entries field
  - Disassociation Timer field
  - Preferred Candidate List Included bit
  - Disassociation Imminent bit
  - BSS Termination Included bit
- Beacon request (refer to section 3.4 for more information)
- Country element
- The "Last Beacon Report Indication Request" subelement

Wi-Fi Agile Multiband Technical Specification at 11–12.

3.4 Beacon report

A Wi-Fi Agile Multiband AP shall send a Beacon request to an associated STA whenever it requires a Beacon report from the STA. The AP shall only send the Beacon request to the STA if the STA indicates that it supports the associated RM capability (as specified in section 11.11.9.1 of [1]).

The Beacon requests may be sent with the following parameters:

- Channel Number set to
  - a specific channel (along with the appropriate global operating class) or
  - 0 (along with the appropriate global operating class) or
  - 255 (along with one or more AP Channel Report subelements)
- Measurement mode set to
  - Active or
  - Passive or
  - Beacon Table

Wi-Fi Agile Multiband Technical Specification at 15.

A Wi-Fi Agile Multiband AP shall not set a measurement mode in a Beacon request to an associated STA to a mode that the STA has not explicitly indicated support for via RM Enabled Capabilities element.

A Wi-Fi Agile Multiband AP may use the information supplied in the Beacon reports from associated Wi-Fi Agile Multiband STAs as an input into an algorithm used to select a new channel for the BSS and/or for requesting a BSS transition for any associated Wi-Fi Agile Multiband STA. The specification of such algorithms is beyond the scope of this program.

A Wi-Fi Agile Multiband STA shall accept a Beacon request from its associated AP with measurement mode set to Beacon Table, and respond with a Beacon report as specified in section 11.11.9.1 of [1].

A Wi-Fi Agile Multiband STA that implements the subset of FT protocols as outlined in section 3.7 shall implement support for active and passive measurement mode Beacon requests, and indicate such support via RM Enabled Capabilities element, as specified in [1].

A Wi-Fi Agile Multiband STA that indicates support for active and passive Beacon requests should[4] accept a Beacon request from its associated AP with measurement mode set to active or passive, and respond with a Beacon report after performing the appropriate procedures, as specified in section 11.11.9.1 of [1].

A Wi-Fi Agile Multiband STA that responds to an active or passive Beacon request shall not include information about channels that do not overlap with the requested channels. A STA is allowed, but not required, to send information about overlapping channels, in the Beacon report it sends to the AP.

A Wi-Fi Agile Multiband STA shall, when responding to a Beacon request, indicate a global operating class in Beacon reports, except if the corresponding received Beacon or Probe Response frame indicates (for example in Supported Operating Classes or AP Channel Report elements) a non-global operating class, in which case the STA shall indicate either the same non-global operating class or the corresponding global operating class.

A Wi-Fi Agile Multiband STA shall indicate the last frame of the sequence of frames generated as a response to a Beacon request when requested by an AP in a Beacon Request, as specified in section 9.4.2.21.7 of [1].

A Wi-Fi Agile Multiband STA shall report in the Beacon Report all information elements requested by the AP in a Beacon Request, without truncating any of those elements. When necessary, the Wi-Fi Agile Multiband STA shall employ fragmentation of the Beacon Report, as specified in section 9.4.2.21.7 of [1].

Wi-Fi Agile Multiband Technical Specification at 16.

Beacon reports are formatted as follows to provide associated with multiple STAs within two networks:

11.11.9.1 Beacon report

If a STA accepts a Beacon request it shall respond with a Radio Measurement Report frame containing Beacon reports for all observed BSSs matching the BSSID and SSID in the Beacon request, at the level of detail requested in the Reporting Detail. If the Reporting Detail is 1 and the optional Request subelement is included in the Beacon request, the corresponding Beacon report shall include the list of elements listed in the Request subelement. The RCPI in the Beacon report indicates the power level of the received Beacon, Measurement Pilot, or Probe Response frame. For repeated measurements (when the Measurement Request frame contains a nonzero value for the Number of Repetitions field), the transmission of the Beacon report may be conditional on the measured RCPI or RSNI value. If the Measurement Request frame contains a 0 value for the Number of Repetitions field, the Beacon Reporting subelement shall not be included in the Beacon request. If the Measurement Request frame contains a nonzero value for the Number of Repetitions field, and if both dot11RMBeaconMeasurementReportingConditionsActivated and dot11RMRepeatedMeasurementsActivated are true, and if a Beacon Reporting subelement is included in a Beacon request, the STA shall respond with a Beacon report if the indicated Beacon reporting condition is true. Otherwise, the STA shall not respond with a Beacon report. Table 9-89 lists the reporting conditions that are based on the measured RCPI or RSNI levels.

IEEE Computer Soc'y, IEEE Std 802.11-2016, *Part 11: Wireless LAN Medium Access Control (MAC) and Physical Layer (PHY) Specifications,* at 1716 (Dec. 14, 2016), available at https://www.candelatech.com/downloads/802.11-2016.pdf [hereinafter IEEE 802.11-2016 Specification].

The Basic Service Set Identifier (BSSID) in a Beacon report is an example of information that constitutes a parameter:

9.4.2.22.7 Beacon report

The format of the Measurement Report field corresponding to a Beacon report is shown in Figure 9-199.

	Operating Class	Channel Number	Actual Measurement Start Time	Measurement Duration	Reported Frame Information
Octets:	1	1	8	2	1

	RCPI	RSNI	BSSID	Antenna ID	Parent TSF	Optional Subelements
Octets:	1	1	6	1	4	variable

Figure 9-199—Measurement Report field format for Beacon report

The Operating Class field indicates the operating class that identifies the channel set of the received Beacon or Probe Response frame. The Country, Operating Class, and Channel Number fields together specify the channel frequency and spacing of the received Beacon or Probe Response frame. Valid operating classes are listed in Annex E.

The Channel Number field indicates the channel number of the received Beacon or Probe Response frame. Channel number is defined within an operating class as shown in Annex E.

IEEE 802.11-2016 Specification at 843.

151. The Spectrum Advanced Wi-Fi service and Spectrum WFAM products process, by the server, the received data. The server will process Beacon report information it receives from the client STAs.

2.3.3 Required IEEE 802.11 capabilities

This section specifies additional IEEE 802.11 capabilities that Wi-Fi Agile Multiband APs and Wi-Fi Agile Multiband STAs shall support.

A Wi-Fi Agile Multiband AP shall support the following capabilities:

- ANQP response with Neighbor Report ANQP-element
- Neighbor Report element with BSS Transition Candidate Preference subelement
- BTM Request frame with:
  - BSS Transition Candidate List Entries field
  - Disassociation Timer field
  - Preferred Candidate List Included bit
  - Disassociation Imminent bit
  - BSS Termination Included bit
- Beacon request (refer to section 3.4 for more information)
- Country element
- The "Last Beacon Report Indication Request" subelement

Wi-Fi Agile Multiband Technical Specification at 11–12.

A Wi-Fi Agile Multiband AP shall not set a measurement mode in a Beacon request to an associated STA to a mode that the STA has not explicitly indicated support for via RM Enabled Capabilities element.

A Wi-Fi Agile Multiband AP may use the information supplied in the Beacon reports from associated Wi-Fi Agile Multiband STAs as an input into an algorithm used to select a new channel for the BSS and/or for requesting a BSS transition for any associated Wi-Fi Agile Multiband STA. The specification of such algorithms is beyond the scope of this program.

A Wi-Fi Agile Multiband STA shall accept a Beacon request from its associated AP with measurement mode set to Beacon Table, and respond with a Beacon report as specified in section 11.11.9.1 of [1].

Wi-Fi Agile Multiband Technical Specification at 16.

152. The Spectrum Advanced Wi-Fi service and Spectrum WFAM products, based on the processed data, determine a policy for at least one of the two or more communication units. The BSS Transition Candidate List Entries field and the Preference field for the most-preferred BSS are examples of determining a policy for at least one of the two or more communication units:

3.5.1.2 STA to Serving AP, BSS Transition Management Based

A Wi-Fi Agile Multiband STA may send a BTM Query frame to its serving Wi-Fi Agile Multiband AP to request a prioritized list of BSSs within the AP's ESS to which the Wi-Fi Agile Multiband STA may transition.

On receipt of a BTM Query frame, the AP shall respond with a BTM Request frame (refer to section 9.6.14.9 in [1]), that:

1. Shall include a BSS Transition Candidate List Entries field (refer to section 9.6.14.9 of [1]), that:
   a. Contains one or more Neighbor Report elements, each of which shall correspond to a global operating class and shall contain the BSS Transition Candidate Preference subelement (Figure 9-299 of [1])
   b. When one or more Neighbor Report elements are present:
      - The Preference field for the most-preferred BSS shall be set to 255
      - The Preference field values used for each level of preference shall decrement consecutively from 255, except for excluded BSSs which shall have Preference field set to zero
      - The Preference field for BSSs that have the same level of preference shall be set to the same value
   c. Shall include a Neighbor Report element for the AP's own BSS that corresponds to the address 1 field of the BTM Query frame. If the AP does not wish the STA to keep the association with the BSS, the AP shall set the preference of its own BSS to zero.
2. May include an MBO-OCE IE in the BSS Transition Candidate List Entries field if the Wi-Fi Agile Multiband STA has indicated that it has cellular data connection available in the Cellular Data Capabilities attribute or Cellular Data Capabilities subelement. If included, the MBO-OCE IE shall contain the Cellular Data Connection Preference attribute[7].

Wi-Fi Agile Multiband Technical Specification at 18.

9.6.14.9 BSS Transition Management Request frame format

The BSS Transition Management Request frame uses the Action frame body format and is transmitted by an AP STA in response to a BSS Transition Management Query frame, or autonomously. The format of the BSS Transition Management Request Action field is shown in Figure 9-701.

	Category	WNM Action	Dialog Token	Request mode	Disassociation Timer
Octets:	1	1	1	1	2

	Validity Interval	BSS Termination Duration (optional)	Session Information URL (optional)	BSS Transition Candidate List Entries (optional)
Octets:	1	0 or 12	variable	variable

Figure 9-701—BSS Transition Management Request Action field format

The Category field is defined in 9.4.1.11.

The WNM Action field is defined in 9.6.14.1.

The Dialog Token field is the nonzero value received in the BSS Transition Management Query frame if the BSS Transition Management Request frame is being transmitted in response to a BSS Transition

IEEE 802.11-2016 Specification at 1230.

The Request mode field is defined in Figure 9-702.

	Preferred Candidate List Included	Abridged	Disassociation Imminent	BSS Termination Included	ESS Disassociation Imminent	Reserved
Bit:	0	1	2	3	4	5- 7

Figure 9-702—Request Mode field

— The Preferred Candidate List Included (bit 0) field indicates whether the BSS transition candidate list included in this frame is a preferred candidate list or a list of known BSS transition candidates. The Preferred Candidate List Included bit set to 0 indicates that the receiving STA can ignore the BSS Transition Candidate List Entries field (see 11.24.7.3). The Preferred Candidate List Included bit set to 1 indicates that the sender expects the receiving STA to process this frame.

— The Abridged (bit 1) field indicates to the recipient of the frame the intended treatment of all BSSIDs not listed in the BSS Transition Candidate List Entries field. The AP sets the Abridged bit in the Request Mode field to 1 when a preference value of 0 is assigned to all BSSIDs that do NOT appear in the BSS Transition Candidate List. The AP sets the Abridged bit in the Request Mode field to 0 when the AP has no recommendation for or against any BSSID not present in the BSS Transition Candidate List Entries field.

— The Disassociation Imminent (bit 2) field indicates whether the STA will be disassociated from the current AP. The value 1 in the Disassociation Imminent bit in the Request Mode field indicates that the STA is to be disassociated from the current AP, while the value 0 indicates that disassociation from the AP is not imminent.

— The BSS Termination Included (bit 3) field indicates that the BSS Termination Duration field is included, the BSS is shutting down and the STA will be disassociated. The AP sets the BSS Termination Included bit in the Request mode field to 1 to indicate that the BSS is shutting down. The BSS Termination Included bit is 0 if no BSS Termination Duration information is included in the BSS Transition Management Request frame.

— The ESS Disassociation Imminent (bit 4) field indicates that the Session Information URL field is included, and that the STA will be disassociated from the ESS. The value 1 in the ESS Disassociation Imminent bit in the Request Mode field indicates that the STA is to be disassociated from the ESS, while the value 0 indicates that disassociation from the ESS is not imminent. When the ESS Disassociation Imminent bit value is 1, a Session Information URL field is included in the BSS Transition Management Request frame.

IEEE 802.11-2016 Specification at 1231.

9.6.14.9 BSS Transition Management Request frame format

⋮

The BSS Transition Candidate List Entries field contains zero or more Neighbor Report elements described in 9.4.2.37. If the STA has no information in response to the BSS Transition Management Query frame or in an unsolicited BSS Transition Management Request frame, the Neighbor Report elements are omitted and the Preferred Candidate List Included bit is 0. The length of the BSS Transition Candidate List Entries in a BSS Transition Management Request frame is limited by the maximum MMPDU size (see 9.3.3.2).

IEEE 802.11-2016 Specification at 1232.

153. The Spectrum Advanced Wi-Fi service and Spectrum WFAM products, in response to the server detecting degradation of network performance in at least one network within the plurality of networks, communicate the policy to at least one or more communication units that implement one or more algorithms that use the parameter and at least one rule or one condition for the one or more communication units to improve a performance of the one or more communication units.

154. A client STA can signal a degradation of network performance in at least one network within the plurality of networks to a server through a WNM-Notification Request Frame with a Non-preferred Channel Report subelement. The server detects this interference or noise by receiving the WNM-notification request frame.

3.2 Channel and Band Indication and Preference

A Wi-Fi Agile Multiband STA shall inform the AP of all of its channels/bands capabilities by including the Supported Operating Classes element in the (Re)Association Request frame. A Wi-Fi Agile Multiband STA shall use the global operating class table (refer to Table E-4 of [1]) to indicate operating classes in the Operating Classes[3] field list. In addition, it may also indicate some or all of these operating classes using non-global operating class tables.

A Wi-Fi Agile Multiband STA shall inform its serving Wi-Fi Agile Multiband AP or candidate Wi-Fi Agile Multiband AP of channels in which it will not operate, or prefers not to operate. This information is communicated to the Wi-Fi Agile Multiband AP when the Wi-Fi Agile Multiband STA associates or reassociates, and when the information changes while the Wi-Fi Agile Multiband STA is associated.

On (re)association a Wi-Fi Agile Multiband STA shall indicate non-preferred channels by including one or more Non-preferred Channel Report attributes (refer to section 4.4.2) in the (Re)Association Request frame. The Wi-Fi Agile Multiband AP may store the non-preferred channels for this Wi-Fi Agile Multiband STA.

An associated Wi-Fi Agile Multiband STA shall indicate to the serving Wi-Fi Agile Multiband AP that its list of non-preferred channels has changed by transmitting a WNM-Notification Request frame with Non-preferred Channel Report subelement (refer to section 4.4 and 4.4.1).

Wi-Fi Agile Multiband Technical Specification at 14.

4.4.1 Non-preferred Channel Report subelement

The format of the Non-preferred Channel Report subelement is illustrated in Table 24. One or more Non-preferred Channel Report Subelements may be included in Optional Subelements field in WNM-Notification Request frame, as defined in section 9.6.14.29 in [1]. Each Non-preferred Channel Report Subelement may specify zero or more channels and their preferences as defined in Table 24.

Table 24. Non-preferred Channel Report subelement

Field	Size (Octets)	Value (Hex)	Description
Subelement ID	1	0xDD	The Subelement ID is set to value 0xDD (221 – Vendor Specific), as specified in Table 9-360 in [1].
Length	1	0x04 or Variable	Length of the following fields in the subelement in octets.
OUI	3	0x506F9A	The OUI is set to value 0x506F9A, as used by the Wi-Fi Alliance.
OUI Type	1	0x02	The OUI Type is set to value 0x02 as used by the Wi-Fi Alliance for Non-preferred Channel Report.
Operating Class	1	Variable	Operating Class contains an enumerated value from table E-4 in Annex E of [1], specifying the global operating class in which the Channel List is valid
Channel List	Variable	Variable	The Channel List contains a variable number of octets, where each octet describes a single channel number. An empty Channel List field indicates that the indicated Preference applies to all channels in the Operating Class. Channel numbering is dependent on Operating Class per Annex E of [1]
Preference	1	0-255	Indicates a preference value for the above set of channels, as defined in Table 9.
Reason Code	1	0-255	Indicates the reason that the Wi-Fi Agile Multiband STA prefers not to operate in this band/channel, refer to Table 10.

Wi-Fi Agile Multiband Technical Specification at 29.

The values of the Preference Field and Reason Code Field can indicate an unacceptable level of interference is being experienced by the Wi-Fi Agile Multiband STA.

Table 9. Preference Field Values

Value	Description
0	Indicates a non-operable band/channel of the Wi-Fi Agile Multiband STA
1	Indicates a band/channel the Wi-Fi Agile Multiband STA prefers not to operate in
2-254	Reserved
255	Indicates a band/channel the Wi-Fi Agile Multiband STA prefers to operate in

The value of the Reason Code field is defined in Table 10.

Table 10. Reason Code Field Values

Value	Name	Description
0	Unspecified	Unspecified reason
1	Co-located Interference	An unacceptable level of interference is being experienced by the Wi-Fi Agile Multiband STA in this channel
2	In-device Interferer	The Wi-Fi Agile Multiband STA has another active connection in this channel, or near enough to this channel to cause operating interference
3-255	Reserved	Reserved

155. If there is no inoperable channel, the Spectrum Advanced Wi-Fi service and

Spectrum WFAM products will improve performance by communicating the policy to STAs by sending the current BSS Transition Management Request frame. The decision by the STA whether to transition is an example of an algorithm that uses the BSSID (i.e., the MAC address of an AP) of the AP to which the STA is transitioning. The mechanism within an STA that determines to transition to a new BSS is an example of a rule or condition used by the algorithm. The BSS Transition Management Request Action field includes the policy that the Spectrum WFAM products communicate to the STAs:

9.6.14.9 BSS Transition Management Request frame format

The BSS Transition Management Request frame uses the Action frame body format and is transmitted by an AP STA in response to a BSS Transition Management Query frame, or autonomously. The format of the BSS Transition Management Request Action field is shown in Figure 9-701.

	Category	WNM Action	Dialog Token	Request mode	Disassociation Timer
Octets:	1	1	1	1	2

	Validity Interval	BSS Termination Duration (optional)	Session Information URL (optional)	BSS Transition Candidate List Entries (optional)
Octets:	1	0 or 12	variable	variable

Figure 9-701—BSS Transition Management Request Action field format

The Category field is defined in 9.4.1.11.

The WNM Action field is defined in 9.6.14.1.

The Dialog Token field is the nonzero value received in the BSS Transition Management Query frame if the BSS Transition Management Request frame is being transmitted in response to a BSS Transition

IEEE 802.11-2016 Specification at 1230.

156. Defendants have had knowledge of the ’313 patent since before this Complaint was filed, or at a minimum received notice of the ’313 patent upon filing of this Complaint, and are aware of their infringement of the ’313 patent.

157. Upon information and belief, Charter has indirectly infringed and continues to indirectly infringe at least claim 19 of the ’313 patent in violation of 35 U.S.C. § 271(b). From at

least the time Charter received notice of the ’313 patent, Charter has induced others to infringe at least claim 19 of the ’313 patent under 35 U.S.C. § 271(b) by, among other things, and with specific intent or willful blindness, actively aiding and abetting others to infringe by encouraging end users (including clients, subscribers, and customers) to use and/or put the Spectrum Advanced Wi-Fi Service and Charter’s Spectrum WFAM products into service at the user’s premises. Charter’s end users directly infringe claim 19 when they cause Spectrum Advanced Wi-Fi Service and Charter’s Spectrum WFAM products to perform the steps of claim 19.

158. Defendants have induced infringement, and continue to induce infringement, of at least claim 19 of the ’313 patent in violation of 35 U.S.C. § 271(b). Defendants actively, knowingly, and intentionally induced, and continue to actively, knowingly, and intentionally induce, infringement of the ’313 patent; with the knowledge and intent that end users will make or use the Spectrum Advanced Wi-Fi service and Charter’s Spectrum WFAM products; and with the knowledge and intent to encourage and facilitate end users’ infringement through the distribution of the Spectrum Advanced Wi-Fi and Spectrum WFAM products and/or the creation and dissemination of promotional and marketing materials, supporting materials, instructions, product manuals, and/or technical information related to Spectrum Advanced Wi-Fi, such as:

https://www.spectrum.com/contact-spectrum;
https://www.spectrum.net/support;
https://www.youtube.com/watch?v=XM5SQYs409s;
https://www.youtube.com/watch?v=5fu__UmzFqw; and
https://www.youtube.com/watch?v=c4b_zB_VvJc&t=4s.

159. Defendants have also contributed to, and continue to contribute to the infringement of claim 19 of the ’313 patent by making, using, offering to sell, selling, and/or importing the Spectrum Advanced Wi-Fi service and Spectrum WFAM products, including the Sagemcom Fast 5285 router, in violation of 35 U.S.C. § 271(c). Defendants make, use, offer to sell, sell, and/or

import such products with the knowledge that they are especially designed for use in a patented system and/or for use in and constitute a material part of the method of claim 1, and are not a staple article of commerce suitable for substantial non-infringing use. For example, Defendants actively and knowingly sell WFAM products and equipment to their subscribers or customers, support those products with Spectrum Advanced Wi-Fi service, and provide customer support, installation, instruction materials, and/or other technical information to their respective customers for the use of such products as a component for use in the method of claim 19.

160. Charter's infringement of the '313 patent is willful and egregious. As set forth above, Defendants have had knowledge of the '313 patent since before this Complaint was filed, or at a minimum received notice of the '313 patent upon filing of this Complaint, and are aware of their infringement of the '313 patent. Among other things, ASSIA informed Charter by letter in November 2019 that Charter was benefiting from the use of ASSIA's patented technology in the products and services that Charter provides to its customers, including those set forth in this Complaint.

161. ASSIA informed Charter that ASSIA's technology was covered by multiple patents and invited Charter to have discussions to conclude a license to the ASSIA patent portfolio, which include the Asserted Patents. As a result of the past dealings and interactions and communications between ASSIA and Charter, *inter alia*, Charter (1) had knowledge of, or was willfully blind to, the existence of the '313 patent and (2) had knowledge of, or was willfully blind to the fact, that its conduct constituted infringement, induced, and/or contributed to infringement of the '313 patent.

162. As a result of Charter's infringement of the '313 patent, ASSIA has suffered monetary damages and is entitled to no less than a reasonable royalty for Charter's use of the

Charter Communications, Inc.
Exhibit 1005
Page #74

claimed inventions of the ’313 patent, together with interest and costs as determined by the Court. ASSIA will continue to suffer damages in the future.

163. Charter does not have any rights to use the ’313 patent as alleged in this Complaint.

164. ASSIA has complied with 35 U.S.C. § 287.

165. ASSIA’s Asserted Patents are publicly available from the United States Patent Office and other online resources such as Google Patents.

166. Charter’s acts of direct and indirect infringement have caused and continues to cause damage to ASSIA. ASSIA is entitled to damages in accordance with 35 U.S.C. §§ 271, 281, and 284 sustained as a result of Charter’s wrongful acts in an amount to be proven at trial.

PRAYER FOR RELIEF

Wherefore, ASSIA prays for the following relief:

A. A judgment in favor of ASSIA that Charter has infringed one or more claims of each of the Asserted Patents;

B. An award of damages to which ASSIA is entitled under 35 U.S.C. § 284 for Charter’s past infringement;

C. A judgment that Charter’s infringement is willful and an award of enhanced damages under 35 U.S.C. § 284;

D. An award of pre-judgment interest and post-judgment interest on the damages awarded, including pre-judgment interest, pursuant to 35 U.S.C. § 284, from the date of each act of infringement of the Asserted Patents by Charter to the day a damages judgment is entered, and an award of post-judgment interest, pursuant to 28 U.S.C. § 1961, continuing until such judgment is paid, at the maximum rate allowed by law;

Charter Communications, Inc.
Exhibit 1005
Page #75

E. A judgment and order finding this to be an exceptional case and requiring Charter to pay the costs of this action (including all disbursements) and attorneys' fees, pursuant to 35 U.S.C. § 285;

F. Order an accounting for damages not presented at trial;

G. Injunctive relief in that Defendants, their affiliates, subsidiaries, officers, agents, servants, employees, and successors and assigns, and other persons who are in active concert or participation with anyone in the foregoing, be enjoined from infringement of the Asserted Patents, including but not limited to an injunction against making, using, offering to sell, selling within the United States, and importing into the United States, products that infringe the Asserted Patents; and

H. Any and all other relief that the Court deems just and equitable.

DEMAND FOR JURY TRIAL

Pursuant to Fed. R. Civ. P. 38, Plaintiff ASSIA demands a trial by jury on all claims and issues so triable.

DATED: July 1, 2024

Respectfully submitted,

/s/ Nicole Glauser

Robert F. Kramer
CA Bar No. 181706 (Admitted E.D. Texas)
rkramer@krameralberti.com
David Alberti
CA Bar No. 220265 (Admitted E.D. Texas)
dalberti@krameralberti.com
Sal Lim
CA Bar No. 211836 (Admitted E.D. Texas)
slim@krameralberti.com
Russell S. Tonkovich
CA Bar No. 233280 (Admitted E.D. Texas)
rtonkovich@krameralberti.com
KRAMER ALBERTI LIM

Charter Communications, Inc.
Exhibit 1005
Page #76

& TONKOVICH LLP
577 Airport Blvd., Ste 250
Burlingame, CA 94010
Telephone: 650 825-4300
Facsimile: 650 460-8443

Nicole Glauser
Texas State Bar No. 24050694
nglauser@krameralberti.com
KRAMER ALBERTI LIM
& TONKOVICH LLP
500 W 2nd Street, Suite 1900
Austin, Texas 78701
Telephone: 737 256-7784
Facsimile: 650 460-8443

Melissa Richard Smith
Texas State Bar No. 24001351
melissa@gillamsmith.com
GILLAM & SMITH, LLP
303 South Washington Ave.
Marshall, TX 75670
Telephone: 903 934-8450
Facsimile: 903 934-9257

Attorneys For Plaintiff
Adaptive Spectrum and Signal Alignment, Inc.

CERTIFICATE OF SERVICE

I hereby certify that on July 1, 2024, the above was filed with the Court's ECF system which will send notification of such filing to all registered participants.

/s/ *Nicole Glauser*

Charter Communications, Inc.
Exhibit 1005
Page #77