US 20120309002A1

(19) United States

(12) Patent Application Publication

Link

(10) Pub. No.: US 2012/0309002 A1

(43) Pub. Date: Dec. 6, 2012

(54) **SAMPLE MULTIPLEXING**

(75) Inventor: **Darren Link**, Lexington, MA (US)

(73) Assignee: **Raindance Technologies, Inc.**, Lexington, MA (US)

(21) Appl. No.: **13/485,234**

(22) Filed: **May 31, 2012**

Related U.S. Application Data

(60) Provisional application No. 61/492,605, filed on Jun. 2, 2011.

Publication Classification

(51) **Int. Cl.**

C12Q 1/68	(2006.01)
G01N 21/76	(2006.01)
G01N 21/64	(2006.01)

(52) **U.S. Cl.** **435/6.11**; 435/6.12

(57) **ABSTRACT**

The invention generally relates to methods for sample multiplexing. In certain embodiments, methods of the invention obtaining a plurality of different reactant molecules, attaching a unique identifier to the reactant molecules, and forming a droplet including the reactant molecules.

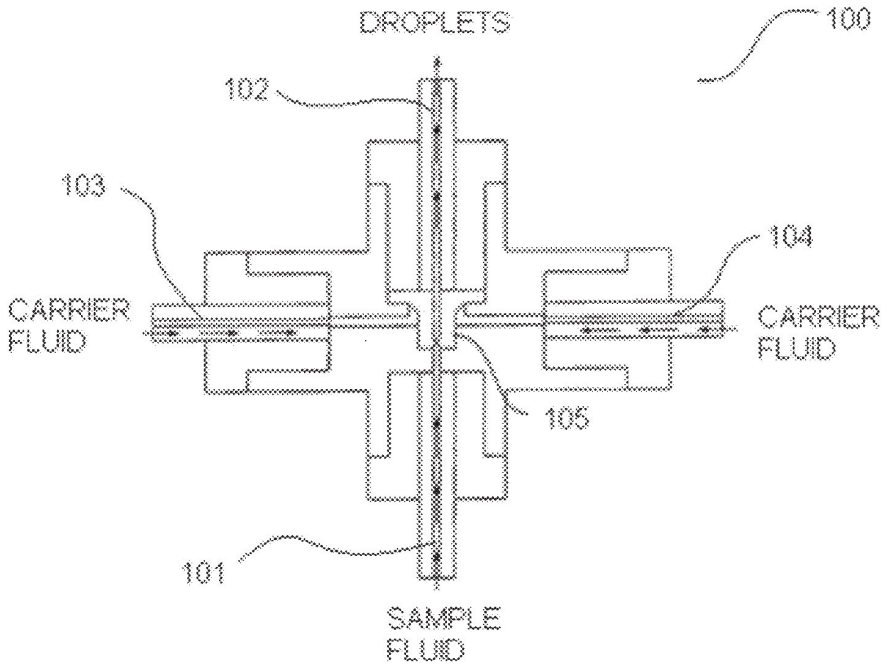

Figure 1

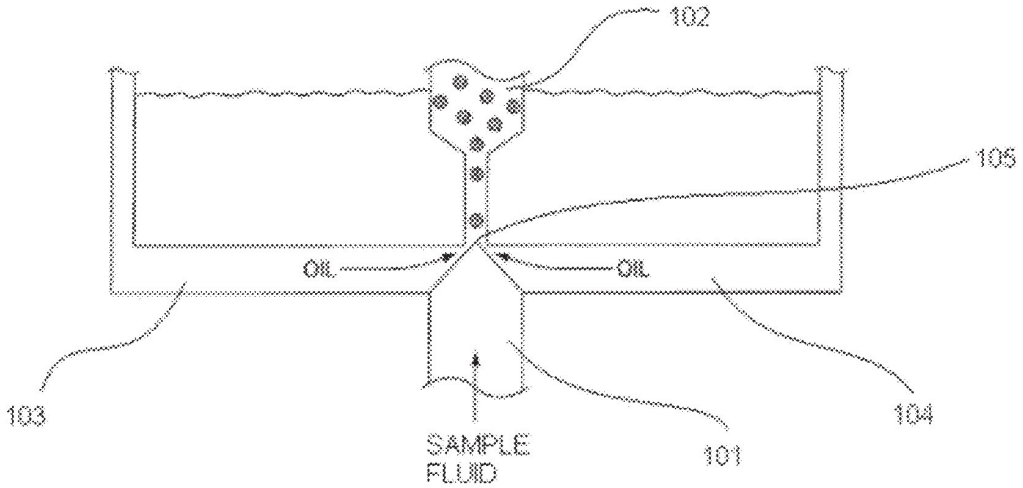

Figure 2

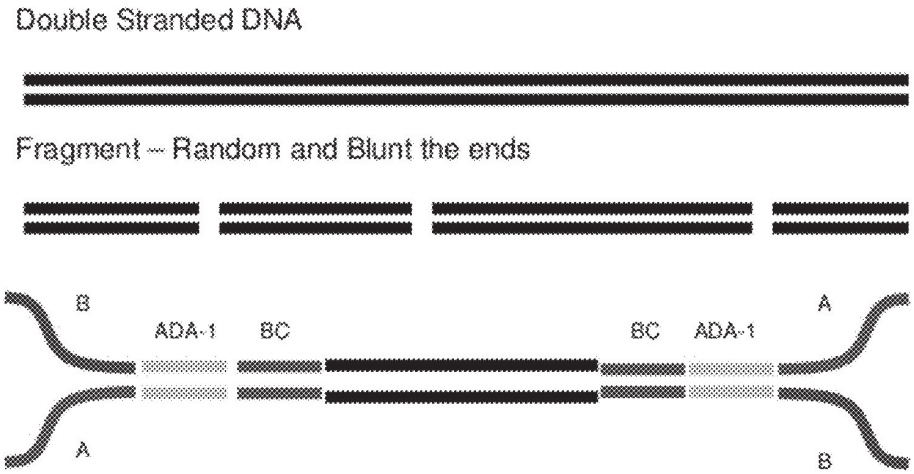
Double Stranded DNA
Fragment – Random and Blunt the ends
B
ADA-1
BC
BC
ADA-1
A
A
B

Figure 3

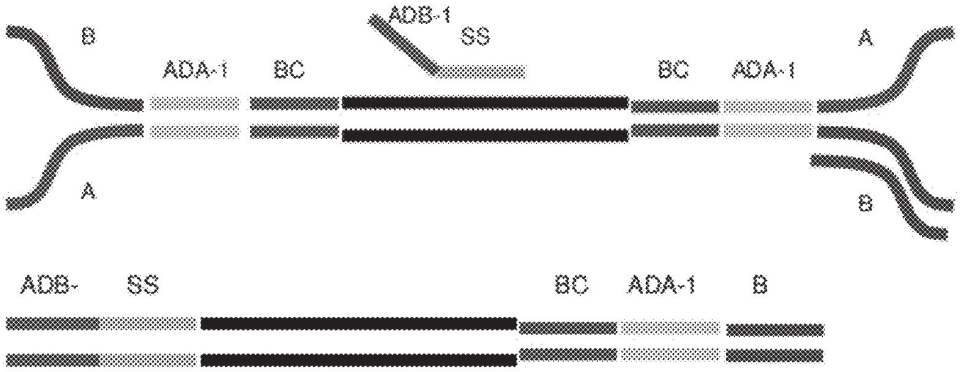

Figure 4

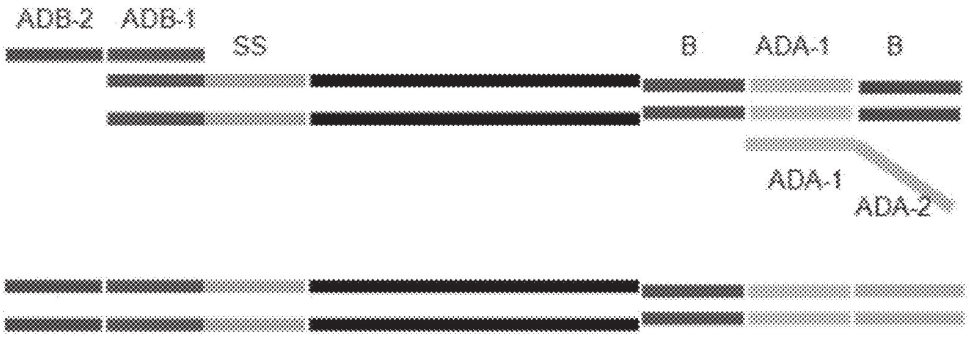

Figure 5

SAMPLE MULTIPLEXING

RELATED APPLICATION

[0001] The present application claims the benefit of and priority to U.S. provisional application Ser. No. 61/492,605, filed Jun. 2, 2011, the content of which is incorporated by reference herein in its entirety.

FIELD OF THE INVENTION

[0002] The invention generally relates to methods for sample multiplexing.

BACKGROUND

[0003] Knowledge of the human genome has given rise to inquiry into individual differences, as well as differences within an individual, as the basis for differences in biological function and dysfunction. Typical methods used to interrogate these genomic differences involve analyzing functional elements of the genome, i.e., protein coding regions, to look for variants within those regions. Exemplary analysis methods include sequencing and PCR based assays. The ability to multiplex samples, i.e., pool different patient samples, is important for decreasing costs and increasing the through-put of analysis platforms.

SUMMARY

[0004] The invention provides methods for unique identification of reactant molecules, especially in heterogeneous samples. Methods of the invention involve obtaining reactant molecules from different samples, attaching a unique identifier to the reactant molecules so that they can be tracked. The labeled reactant molecules are then pooled and droplets are formed including labeled reactant molecules from different samples. Due to the association of the identifier with reactant molecules from a particular sample, resulting data from the pooled samples may be separated after analysis has occurred and correlated back to the sample from which it originated. Exemplary reactant molecules include nucleic acids and proteins. In preferred embodiments, the reactant molecules are nucleic acids isolated from different samples.

[0005] In a preferred aspect, the invention provides methods for sample indexing using molecular labels. For example, genomic DNA is fragmented and tags or adaptors are attached (preferably ligated) to genomic DNA fragments. The sample is enriched using loci-specific primers and primers specific for the adaptor. The fragments are then purified and a secondary amplification is conducted. In a highly-preferred embodiment, sample preparation is conducted in droplets as described below. For example, droplets are generated with adaptor-ligated genomic DNA. Those droplets are merged with droplets comprising a primer library. The merged droplets are amplified; and then amplified nucleic acid is purified from the merged droplets.

[0006] The invention is especially useful in sample preparation for multiplex sequencing applications, but is also applicable across a broad range of detection assays, including multiplex PCR based detection assays. In sequencing applications, a barcode oligonucleotide is attached to a nucleic acid from a sample. The barcode oligonucleotide is a unique for each sample such that no two samples have the same barcoded oligonucleotide. The barcodes serve to map from a given molecule to a nucleic acid from a particular sample. Once barcoded, libraries are pooled, optionally amplified, and finally sequenced.

[0007] Sample preparation can occur in a single droplet, dramatically reducing reagent costs, and preparation time. In certain embodiments, adapter oligonucleotides are introduced to the droplet along with reagents necessary to attach the adapter oligonucleotides to the nucleic acids. Once the adapter oligonucleotides are attached to the nucleic acids, the nucleic acids are optionally amplified. The nucleic acids are then released from the droplet, immobilized on a solid support, and then sequenced.

[0008] In other embodiments, beads are introduced into the droplet along with reagents necessary to attach the nucleic acids to the nucleic acids. Once the nucleic acids are attached to the beads, the nucleic acids are optionally amplified. The bead-bound nucleic acids are then released from the droplet, immobilized on a solid support, and then sequenced. In either embodiment, the sequencing process includes the reading of at least two regions, a read of the genomic region and a read of the barcode with the barcode read serving to allow the mapping of the genomic read to nucleic acid from a given sample.

[0009] Any technique known in the art for forming sample droplets may be used with methods of the invention. An exemplary method involves flowing a stream of sample fluid including nucleic acids from different samples so that the sample stream intersects two opposing streams of flowing carrier fluid. The carrier fluid is immiscible with the sample fluid. Intersection of the sample fluid with the two opposing streams of flowing carrier fluid results in partitioning of the sample fluid into individual sample droplets. The carrier fluid may be any fluid that is immiscible with the sample fluid. An exemplary carrier fluid is oil, which may be a fluorinated or perfluorinated oil. In certain embodiments, the carrier fluid includes a surfactant, such as a fluorosurfactant.

[0010] Another droplet formation method includes merging at least two droplets, in which each droplet includes nucleic acids from one or more samples. Another droplet formation method includes forming a droplet including nucleic acid from a sample, and contacting the droplet with a fluid stream including nucleic acid from another sample, in which a portion of the fluid stream integrates with the droplet to form a droplet including nucleic acid from two or more samples. An electric field may be applied to the droplet and the fluid stream. The electric field assists in rupturing the interface separating the two sample fluids. In particular embodiments, the electric field is a high-frequency electric field.

[0011] Methods of the invention may be conducted in microfluidic channels. As such, in certain embodiments, methods of the invention may further involve flowing the droplet through a first channel and flowing the fluid stream through a second channel. The first and second channels are oriented such that the channels intersect each other. Any angle that results in an intersection of the channels may be used. In a particular embodiment, the first and second channels are oriented perpendicular to each other.

BRIEF DESCRIPTION OF THE DRAWINGS

[0012] FIG. **1** is a drawing showing a device for droplet formation.

[0013] FIG. **2** is a drawing showing a device for droplet formation.

[0014] FIG. **3** is a drawing showing formation of blunt-end fragments and ligators.

[0015] FIG. **4** is a drawing showing the droplet amplification strategy for ligated genomic DNA fragments.

[0016] FIG. **5** shows purified amplified genomic DNA.

DETAILED DESCRIPTION

[0017] The invention generally relates to methods for sample multiplexing. The following sections discuss general considerations for identifiers, attaching identifiers to nucleic acids, and PCR, nucleic acid sequencing, for example, template considerations, polymerases useful in sequencing-by-synthesis, choice of surfaces, reaction conditions, signal detection and analysis.

[0018] A general scheme is show in FIGS. **3**-**5**. As show in FIG. **1**, genomic DNA is fragmented and blunt-end ligated to one or more adaptors. As shown in FIG. **2**, The adaptor-ligated genomic DNA fragments are then incorporated into droplets as described below; and the droplets are merged with primer library droplets. The merged droplets (genomic DNA fragments with ligated adaptors and primers) are amplified by, for example, polymerase chain reaction. Finally, FIG. **3** shows amplicon purified from the merged droplets, which are then exposed to a secondary amplification. Further details on the processes of the invention are provided below.

Nucleic Acid Templates

[0019] Nucleic acid templates include deoxyribonucleic acid (DNA) and/or ribonucleic acid (RNA). Nucleic acid templates can be synthetic or derived from naturally occurring sources, or may include both synthetic and natural sequence; and may include PCR product. In one embodiment, nucleic acid template molecules are isolated from a biological sample containing a variety of other components, such as proteins, lipids and non-template nucleic acids. Nucleic acid template molecules can be obtained from any cellular material, obtained from an animal, plant, bacterium, fungus, or any other cellular organism. Biological samples for use in the present invention include viral particles or preparations. Nucleic acid template molecules can be obtained directly from an organism or from a biological sample obtained from an organism, e.g., from blood, urine, cerebrospinal fluid, seminal fluid, saliva, sputum, stool and tissue. Any tissue or body fluid specimen may be used as a source for nucleic acid for use in the invention. Nucleic acid template molecules can also be isolated from cultured cells, such as a primary cell culture or a cell line. The cells or tissues from which template nucleic acids are obtained can be infected with a virus or other intracellular pathogen. A sample can also be total RNA extracted from a biological specimen, a cDNA library, viral, or genomic DNA.

[0020] In sequencing related embodiments, nucleic acid obtained from biological samples typically is fragmented to produce suitable fragments for analysis. In one embodiment, nucleic acid from a biological sample is fragmented by sonication. Nucleic acid template molecules can be obtained as described in U.S. Patent Application Publication Number US2002/0190663 A1, published Oct. 9, 2003. Generally, nucleic acid can be extracted from a biological sample by a variety of techniques such as those described by Maniatis, et al., Molecular Cloning: A Laboratory Manual, Cold Spring Harbor, N.Y., pp. 280-281 (1982). Generally, individual nucleic acid template molecules can be from about 1 base to about 20 kb. Nucleic acid molecules may be single-stranded, double-stranded, or double-stranded with single-stranded regions (for example, stem- and loop-structures).

[0021] A biological sample as described herein may be homogenized or fractionated in the presence of a detergent or surfactant. The concentration of the detergent in the buffer may be about 0.05% to about 10.0%. The concentration of the detergent can be up to an amount where the detergent remains soluble in the solution. In a preferred embodiment, the concentration of the detergent is between 0.1% to about 2%. The detergent, particularly a mild one that is nondenaturing, can act to solubilize the sample. Detergents may be ionic or nonionic. Examples of nonionic detergents include triton, such as the Triton® X series (Triton® X-100 t-Oct-C_6H_4—$(OCH_2—CH_2)_xOH$, x=9-10, Triton® X-100R, Triton® X-114 x=7-8), octyl glucoside, polyoxyethylene(9)dodecyl ether, digitonin, IGEPAL® CA630 octylphenyl polyethylene glycol, n-octyl-beta-D-glucopyranoside (betaOG), n-dodecyl-beta, Tween® 20 polyethylene glycol sorbitan monolaurate, Tween® 80 polyethylene glycol sorbitan monooleate, polidocanol, n-dodecyl beta-D-maltoside (DDM), NP-40 nonylphenyl polyethylene glycol, C12E8 (octaethylene glycol n-dodecyl monoether), hexaethyleneglycol mono-n-tetradecyl ether (C14E06), octyl-beta-thioglucopyranoside (octyl thioglucoside, OTG), Emulgen, and polyoxyethylene 10 lauryl ether (C12E10). Examples of ionic detergents (anionic or cationic) include deoxycholate, sodium dodecyl sulfate (SDS), N-lauroylsarcosine, and cetyltrimethylammoniumbromide (CTAB). A zwitterionic reagent may also be used in the purification schemes of the present invention, such as Chaps, zwitterion 3-14, and 3-[(3-cholamidopropyl)dimethylammonio]-1-propanesulf-onate. It is contemplated also that urea may be added with or without another detergent or surfactant.

[0022] Lysis or homogenization solutions may further contain other agents, such as reducing agents. Examples of such reducing agents include dithiothreitol (DTT), .beta.-mercaptoethanol, DTE, GSH, cysteine, cysteamine, tricarboxyethyl phosphine (TCEP), or salts of sulfurous acid.

Identifiers

[0023] Any molecule that can be used to distinguish among nucleic acids from different samples may be used as an identifier, adaptor, or tag. Exemplary identifiers include barcode oligonucleotides, radioactive molecules, optical absorbance molecules, e.g., molecules capable of detection by UV-visible absorbance detection, optical emission detection, e.g., fluorescence or chemiluminescence.

[0024] In certain embodiments, the identifiers are barcode sequences that are attached to or incorporated into a nucleic acid template. The barcode sequences may be attached to the template such that a first barcode sequence is attached to a 5' end of the template and a second barcode sequence is attached to a 3' end of the template. The first and second barcode sequences may be the same, or they may be different. Barcode sequence may be incorporated into a contiguous region of a template that includes the target to be sequenced.

[0025] Exemplary methods for designing sets of barcode sequences and other methods for attaching barcode sequences are shown in U.S. Pat. Nos. 6,138,077; 6,352,828; 5,636,400; 6,172,214; 6235,475; 7,393,665; 7,544,473; 5,846,719; 5,695,934; 5,604,097; 6,150,516; RE39,793; 7,537,897; 6172,218; and 5,863,722, the content of each of which is incorporated by reference herein in its entirety.

[0026] The barcode sequence generally includes certain features that make the sequence useful in sequencing reactions. For example the barcode sequences can be designed to have minimal or no homopolymer regions, i.e., 2 or more of the same base in a row such as AA or CCC, within the barcode sequence. The barcode sequences can also be designed so that they do not overlap the target region to be sequence or contain a sequence that is identical to the target.

[0027] The first and second barcode sequences are designed such that each pair of sequences is correlated to a particular sample, allowing samples to be distinguished and validated. Methods of designing sets of barcode sequences is shown for example in Brenner et al. (U.S. Pat. No. 6,235,475), the contents of which are incorporated by reference herein in their entirety. In certain embodiments, the barcode sequences range from about 2 nucleotides to about 50; and preferably from about 4 to about 20 nucleotides. Since the barcode sequence is sequenced along with the template nucleic acid or may be sequenced in a separate read, the oligonucleotide length should be of minimal length so as to permit the longest read from the template nucleic acid attached.

[0028] Methods of the invention involve attaching the barcode sequences to the template nucleic acids. Template nucleic acids are able to be fragmented or sheared to desired length, e.g. generally from 100 to 500 bases or longer, using a variety of mechanical, chemical and/or enzymatic methods. DNA may be randomly sheared via sonication, exposed to a DNase or one or more restriction enzymes, a transposase, or nicking enzyme. RNA may be fragmented by brief exposure to an RNase, heat plus magnesium, or by shearing. The RNA may be converted to cDNA before or after fragmentation.

[0029] Barcode sequence is integrated with template using methods known in the art. Barcode sequence is integrated with template using, for example, a ligase, a polymerase, Topo cloning (e.g., Invitrogen's topoisomerase vector cloning system using a topoisomerase enzyme), or chemical ligation or conjugation. The ligase may be any enzyme capable of ligating an oligonucleotide (RNA or DNA) to the template nucleic acid molecule. Suitable ligases include T4 DNA ligase and T4 RNA ligase (such ligases are available commercially, from New England Biolabs). Methods for using ligases are well known in the art. The polymerase may be any enzyme capable of adding nucleotides to the 3' and the 5' terminus of template nucleic acid molecules. Barcode sequence can be incorporated via a PCR reaction as part of the PCR primer.

[0030] The ligation may be blunt ended or via use of over hanging ends. In certain embodiments, following fragmentation, the ends of the fragments may be repaired, trimmed (e.g. using an exonuclease), or filled (e.g., using a polymerase and dNTPs), to form blunt ends. Upon generating blunt ends, the ends may be treated with a polymerase and dATP to form a template independent addition to the 3'-end and the 5-end of the fragments, thus producing a single A overhanging. This single A is used to guide ligation of fragments with a single T overhanging from the 5'-end in a method referred to as T-A cloning.

[0031] Alternatively, because the possible combination of overhangs left by the restriction enzymes are known after a restriction digestion, the ends may be left as is, i.e., ragged ends. In certain embodiments double stranded oligonucleotides with complementary over hanging ends are used.

[0032] In other embodiments, the identifiers are florescent labels attached to the nucleotides. Examples of fluorescent labels include, but are not limited to, 4-acetamido-4'-isothiocyanatostilbene-2,2' disulfonic acid; acridine and derivatives: acridine, acridine isothiocyanate; 5-(2'-aminoethyl)aminonaphthalene-1-sulfonic acid (EDANS); 4-amino-N-[3-vinylsulfonyl)phenyl]naphthalimide-3,5 disulfonate; N-(4-anilino-1-naphthyl)maleimide; anthranilamide; BODIPY; Brilliant Yellow; coumarin and derivatives; coumarin, 7-amino-4-methylcoumarin (AMC, Coumarin 120), 7-amino-4-trifluoromethylcouluarin (Coumaran 151); cyanine dyes; cyanosine; 4',6-diaminidino-2-phenylindole (DAPI); 5'5"-dibromopyrogallol-sulfonaphthalein (Bromopyrogallol Red); 7-diethylamino-3-(4'-isothiocyanatophenyl)-4-methylcoumarin; diethylenetriamine pentaacetate; 4,4'-diisothiocyanatodihydro-stilbene-2,2'-disulfonic acid; 4,4'-diisothiocyanatostilbene-2,2'-disulfonic acid; 5-[dimethylamino]naphthalene-1-sulfonyl chloride (DNS, dansylchloride); 4-dimethylaminophenylazophenyl-4'-isothiocyanate (DABITC); eosin and derivatives; eosin, eosin isothiocyanate, erythrosin and derivatives; erythrosin B, erythrosin, isothiocyanate; ethidium; fluorescein and derivatives; 5-carboxyfluorescein (FAM), 5-(4,6-dichlorotriazin-2-yl)aminofluorescein (DTAF), 2',7'-dimethoxy-4'5'-dichloro-6-carboxyfluorescein, fluorescein, fluorescein isothiocyanate, QFITC, (XRITC); fluorescamine; IR144; IR1446; Malachite Green isothiocyanate; 4-methylumbelliferoneortho cresolphthalein; nitrotyrosine; pararosaniline; Phenol Red; B-phycoerythrin; o-phthaldialdehyde; pyrene and derivatives: pyrene, pyrene butyrate, succinimidyl 1-pyrene; butyrate quantum dots; Reactive Red 4 (Cibacron™ Brilliant Red 3B-A) rhodamine and derivatives: 6-carboxy-X-rhodamine (ROX), 6-carboxyrhodamine (R6G), lissamine rhodamine B sulfonyl chloride rhodamine (Rhod), rhodamine B, rhodamine 123, rhodamine X isothiocyanate, sulforhodamine B, sulforhodamine 101, sulfonyl chloride derivative of sulforhodamine 101 (Texas Red); N,N,N',N' tetramethyl-6-carboxyrhodamine (TAMRA); tetramethyl rhodamine; tetramethyl rhodamine isothiocyanate (TRITC); riboflavin; rosolic acid; terbium chelate derivatives; Cy3; Cy5; Cy5.5; Cy7; IRD 700; IRD 800; La Jolta Blue; phthalo cyanine; and naphthalo cyanine. Preferred fluorescent labels are cyanine-3 and cyanine-5. Labels other than fluorescent labels are contemplated by the invention, including other optically-detectable labels. Methods of attaching labels to nucleic acids are known in the art.

Droplet Formation

[0033] Methods of the invention involve forming sample droplets that include nucleic acid from different samples. The droplets are aqueous droplets that are surrounded by an immiscible carrier fluid. Methods of forming such droplets are shown for example in Link et al. (U.S. patent application numbers 2008/0014589, 2008/0003142, and 2010/0137163), Stone et al. (U.S. Pat. No. 7,708,949 and U.S. patent application number 2010/0172803), Anderson et al. (U.S. Pat. No. 7,041,481 and which reissued as RE41,780) and European publication number EP2047910 to Raindance Technologies Inc. The content of each of which is incorporated by reference herein in its entirety.

[0034] FIG. **1** shows an exemplary embodiment of a device **100** for droplet formation. Device **100** includes an inlet channel **101**, and outlet channel **102**, and two carrier fluid channels **103** and **104**. Channels **101**, **102**, **103**, and **104** meet at a junction **105**. Inlet channel **101** flows sample fluid to the junction **105**. Carrier fluid channels **103** and **104** flow a carrier

fluid that is immiscible with the sample fluid to the junction **105**. Inlet channel **101** narrows at its distal portion wherein it connects to junction **105** (See FIG. **2**). Inlet channel **101** is oriented to be perpendicular to carrier fluid channels **103** and **104**. Droplets are formed as sample fluid flows from inlet channel **101** to junction **105**, where the sample fluid interacts with flowing carrier fluid provided to the junction **105** by carrier fluid channels **103** and **104**. Outlet channel **102** receives the droplets of sample fluid surrounded by carrier fluid.

[0035] The sample fluid is typically an aqueous buffer solution, such as ultrapure water (e.g., 18 mega-ohm resistivity, obtained, for example by column chromatography), 10 mM Tris HCl and 1 mM EDTA (TE) buffer, phosphate buffer saline (PBS) or acetate buffer. Any liquid or buffer that is physiologically compatible with nucleic acid molecules can be used. The carrier fluid is one that is immiscible with the sample fluid. The carrier fluid can be a non-polar solvent, decane (e.g., tetradecane or hexadecane), fluorocarbon oil, silicone oil or another oil (for example, mineral oil).

[0036] In certain embodiments, the carrier fluid contains one or more additives, such as agents which reduce surface tensions (surfactants). Surfactants can include Tween, Span, fluorosurfactants, and other agents that are soluble in oil relative to water. In some applications, performance is improved by adding a second surfactant to the sample fluid. Surfactants can aid in controlling or optimizing droplet size, flow and uniformity, for example by reducing the shear force needed to extrude or inject droplets into an intersecting channel. This can affect droplet volume and periodicity, or the rate or frequency at which droplets break off into an intersecting channel. Furthermore, the surfactant can serve to stabilize aqueous emulsions in fluorinated oils from coalescing.

[0037] In certain embodiments, the droplets may be coated with a surfactant. Preferred surfactants that may be added to the carrier fluid include, but are not limited to, surfactants such as sorbitan-based carboxylic acid esters (e.g., the "Span" surfactants, Fluka Chemika), including sorbitan monolaurate (Span 20), sorbitan monopalmitate (Span 40), sorbitan monostearate (Span 60) and sorbitan monooleate (Span 80), and perfluorinated polyethers (e.g., DuPont Krytox 157 FSL, FSM, and/or FSH). Other non-limiting examples of non-ionic surfactants which may be used include polyoxyethylenated alkylphenols (for example, nonyl-, p-dodecyl-, and dinonylphenols), polyoxyethylenated straight chain alcohols, polyoxyethylenated polyoxypropylene glycols, polyoxyethylenated mercaptans, long chain carboxylic acid esters (for example, glyceryl and polyglycerl esters of natural fatty acids, propylene glycol, sorbitol, polyoxyethylenated sorbitol esters, polyoxyethylene glycol esters, etc.) and alkanolamines (e.g., diethanolamine-fatty acid condensates and isopropanolamine-fatty acid condensates).

[0038] In certain embodiments, the carrier fluid may be caused to flow through the outlet channel so that the surfactant in the carrier fluid coats the channel walls. In one embodiment, the fluorosurfactant can be prepared by reacting the perflourinated polyether DuPont Krytox 157 FSL, FSM, or FSH with aqueous ammonium hydroxide in a volatile fluorinated solvent. The solvent and residual water and ammonia can be removed with a rotary evaporator. The surfactant can then be dissolved (e.g., 2.5 wt %) in a fluorinated oil (e.g., Flourinert (3M)), which then serves as the carrier fluid.

[0039] Another technique for forming droplets including nucleic acids from different samples involves droplet merging. The merging of droplets can be accomplished using, for example, one or more droplet merging techniques described for example in Link et al. (U.S. patent application numbers 2008/0014589, 2008/0003142, and 2010/0137163) and European publication number EP2047910 to Raindance Technologies Inc. In embodiments involving merging of droplets, two droplet formation modules are used. A first droplet formation module produces the droplets including nucleic acids from a first sample. A second droplet formation module produces droplets that contain nucleic acid from a second sample. The droplet formation modules are arranged and controlled to produce an interdigitation of droplets flowing through a channel. Such an arrangement is described for example in Link et al. (U.S. patent application numbers 2008/0014589, 2008/0003142, and 2010/0137163) and European publication number EP2047910 to Raindance Technologies Inc.

[0040] Droplets are then caused to merge, producing a droplet that includes nucleic acid from different sample. Droplets may be merged for example by: producing dielectrophoretic forces on the droplets using electric field gradients and then controlling the forces to cause the droplets to merge; producing droplets of different sizes that thus travel at different velocities, which causes the droplets to merge; and producing droplets having different viscosities that thus travel at different velocities, which causes the droplets to merge with each other. Each of those techniques is further described in Link et al. (U.S. patent application numbers 2008/0014589, 2008/0003142, and 2010/0137163) and European publication number EP2047910 to Raindance Technologies Inc. Further description of producing and controlling dielectrophoretic forces on droplets to cause the droplets to merge is described in Link et al. (U.S. patent application number 2007/0003442) and European Patent Number EP2004316 to Raindance Technologies Inc.

[0041] Another approach to forming a droplet including nucleic acid from different samples involves forming a droplet including nucleic acid from a first sample, and contacting the droplet with a fluid stream including nucleic acid from a second sample, in which a portion of the fluid stream integrates with the droplet to form a droplet including nucleic acid from different samples. In this approach, only one phase needs to reach a merge area in a form of a droplet. Further description of such method is shown in the co-owned and co-pending U.S. patent application to Yurkovetsky, (U.S. patent application Ser. No. 61/441,985), the content of which is incorporated y reference herein in its entirety.

[0042] A droplet is formed as described above. After formation of the droplet is contacted with a flow of a second sample fluid stream. Contact between the droplet and the fluid stream results in a portion of the fluid stream integrating with the droplet to form a droplet including nucleic acid from different samples.

[0043] The monodisperse droplets of the first sample fluid flow through a first channel separated from each other by immiscible carrier fluid and suspended in the immiscible carrier fluid. The droplets are delivered to the merge area, i.e., junction of the first channel with the second channel, by a pressure-driven flow generated by a positive displacement pump. While droplet arrives at the merge area, a bolus of a second sample fluid is protruding from an opening of the second channel into the first channel. Preferably, the channels are oriented perpendicular to each other. However, any angle that results in an intersection of the channels may be used.

[0044] The bolus of the second sample fluid stream continues to increase in size due to pumping action of a positive displacement pump connected to channel, which outputs a steady stream of the second sample fluid into the merge area. The flowing droplet containing the first sample fluid eventually contacts the bolus of the second sample fluid that is protruding into the first channel. Contact between the two sample fluids results in a portion of the second sample fluid being segmented from the second sample fluid stream and joining with the first sample fluid droplet to form a mixed droplet. In certain embodiments, each incoming droplet of first sample fluid is merged with the same amount of second sample fluid.

[0045] In certain embodiments, an electric charge is applied to the first and second sample fluids. Description of applying electric charge to sample fluids is provided in Link et al. (U.S. patent application number 2007/0003442) and European Patent Number EP2004316 to Raindance Technologies Inc, the content of each of which is incorporated by reference herein in its entirety. Electric charge may be created in the first and second sample fluids within the carrier fluid using any suitable technique, for example, by placing the first and second sample fluids within an electric field (which may be AC, DC, etc.), and/or causing a reaction to occur that causes the first and second sample fluids to have an electric charge, for example, a chemical reaction, an ionic reaction, a photocatalyzed reaction, etc.

[0046] The electric field, in some embodiments, is generated from an electric field generator, i.e., a device or system able to create an electric field that can be applied to the fluid. The electric field generator may produce an AC field (i.e., one that varies periodically with respect to time, for example, sinusoidally, sawtooth, square, etc.), a DC field (i.e., one that is constant with respect to time), a pulsed field, etc. The electric field generator may be constructed and arranged to create an electric field within a fluid contained within a channel or a microfluidic channel. The electric field generator may be integral to or separate from the fluidic system containing the channel or microfluidic channel, according to some embodiments.

[0047] Techniques for producing a suitable electric field (which may be AC, DC, etc.) are known to those of ordinary skill in the art. For example, in one embodiment, an electric field is produced by applying voltage across a pair of electrodes, which may be positioned on or embedded within the fluidic system (for example, within a substrate defining the channel or microfluidic channel), and/or positioned proximate the fluid such that at least a portion of the electric field interacts with the fluid. The electrodes can be fashioned from any suitable electrode material or materials known to those of ordinary skill in the art, including, but not limited to, silver, gold, copper, carbon, platinum, copper, tungsten, tin, cadmium, nickel, indium tin oxide ("ITO"), etc., as well as combinations thereof. In some cases, transparent or substantially transparent electrodes can be used.

[0048] The electric field facilitates rupture of the interface separating the second sample fluid and the droplet. Rupturing the interface facilitates merging of bolus of the second sample fluid and the first sample fluid droplet. The forming mixed droplet continues to increase in size until it a portion of the second sample fluid breaks free or segments from the second sample fluid stream prior to arrival and merging of the next droplet containing the first sample fluid. The segmenting of the portion of the second sample fluid from the second sample fluid stream occurs as soon as the shear force exerted on the forming mixed droplet by the immiscible carrier fluid overcomes the surface tension whose action is to keep the segmenting portion of the second sample fluid connected with the second sample fluid stream. The now fully formed mixed droplet continues to flow through the first channel.

Amplification in Droplets

[0049] Methods of the invention may further involve amplifying the nucleic acids in each droplet. Amplification refers to production of additional copies of a nucleic acid sequence and is generally carried out using polymerase chain reaction or other technologies well known in the art (e.g., Dieffenbach and Dveksler, PCR Primer, a Laboratory Manual, Cold Spring Harbor Press, Plainview, N.Y. [1995]). The amplification reaction may be any amplification reaction known in the art that amplifies nucleic acid molecules, such as polymerase chain reaction, nested polymerase chain reaction, polymerase chain reaction-single strand conformation polymorphism, ligase chain reaction (Barany F. (1991) PNAS 88:189-193; Barany F. (1991) PCR Methods and Applications 1:5-16), ligase detection reaction (Barany F. (1991) PNAS 88:189-193), strand displacement amplification and restriction fragments length polymorphism, transcription based amplification system, nucleic acid sequence-based amplification, rolling circle amplification, and hyper-branched rolling circle amplification.

[0050] In certain embodiments, the amplification reaction is the polymerase chain reaction. Polymerase chain reaction (PCR) refers to methods by K. B. Mullis (U.S. Pat. Nos. 4,683,195 and 4,683,202, hereby incorporated by reference) for increasing concentration of a segment of a target sequence in a mixture of genomic DNA without cloning or purification. The process for amplifying the target sequence includes introducing an excess of oligonucleotide primers to a DNA mixture containing a desired target sequence, followed by a precise sequence of thermal cycling in the presence of a DNA polymerase. The primers are complementary to their respective strands of the double stranded target sequence.

[0051] To effect amplification, primers are annealed to their complementary sequence within the target molecule. Following annealing, the primers are extended with a polymerase so as to form a new pair of complementary strands. The steps of denaturation, primer annealing and polymerase extension can be repeated many times (i.e., denaturation, annealing and extension constitute one cycle; there can be numerous cycles) to obtain a high concentration of an amplified segment of a desired target sequence.

[0052] Methods for performing PCR in droplets are shown for example in Link et al. (U.S. patent application numbers 2008/0014589, 2008/0003142, and 2010/0137163), Anderson et al. (U.S. Pat. No. 7,041,481 and which reissued as RE41,780) and European publication number EP2047910 to Raindance Technologies Inc. The content of each of which is incorporated by reference herein in its entirety.

[0053] The sample droplet may be pre-mixed with a primer or primers, or the primer or primers may be added to the droplet. In some embodiments, droplets created by segmenting the starting sample are merged with a second set of droplets including one or more primers for the target nucleic acid in order to produce final droplets. The merging of droplets can be accomplished using, for example, one or more droplet merging techniques described for example in Link et al. (U.S. patent application numbers 2008/0014589, 2008/0003142,

and 2010/0137163) and European publication number EP2047910 to Raindance Technologies Inc.

[0054] In embodiments involving merging of droplets, two droplet formation modules are used. A first droplet formation module produces the sample droplets that on average contain a single target nucleic acid. A second droplet formation module produces droplets that contain reagents for a PCR reaction. Such droplets generally include Taq polymerase, deoxynucleotides of type A, C, G and T, magnesium chloride, and forward and reverse primers, all suspended within an aqueous buffer. The second droplet also includes detectably labeled probes for detection of the amplified target nucleic acid, the details of which are discussed below.

[0055] Primers can be prepared by a variety of methods including but not limited to cloning of appropriate sequences and direct chemical synthesis using methods well known in the art (Narang et al., Methods Enzymol., 68:90 (1979); Brown et al., Methods Enzymol., 68:109 (1979)). Primers can also be obtained from commercial sources such as Operon Technologies, Amersham Pharmacia Biotech, Sigma, and Life Technologies. The primers can have an identical melting temperature. The lengths of the primers can be extended or shortened at the 5' end or the 3' end to produce primers with desired melting temperatures. Also, the annealing position of each primer pair can be designed such that the sequence and, length of the primer pairs yield the desired melting temperature. The simplest equation for determining the melting temperature of primers smaller than 25 base pairs is the Wallace Rule (Td=2(A+T)+4(G+C)). Computer programs can also be used to design primers, including but not limited to Array Designer Software (Arrayit Inc.), Oligonucleotide Probe Sequence Design Software for Genetic Analysis (Olympus Optical Co.), NetPrimer, and DNAsis from Hitachi Software Engineering. The TM (melting or annealing temperature) of each primer is calculated using software programs such as Oligo Design, available from Invitrogen Corp.

[0056] The droplet formation modules are arranged and controlled to produce an interdigitation of sample droplets and PCR reagent droplets flowing through a channel. Such an arrangement is described for example in Link et al. (U.S. patent application numbers 2008/0014589, 2008/0003142, and 2010/0137163) and European publication number EP2047910 to Raindance Technologies Inc.

[0057] A sample droplet is then caused to merge with a PCR reagent droplet, producing a droplet that includes Taq polymerase, deoxynucleotides of type A, C, G and T, magnesium chloride, forward and reverse primers, detectably labeled probes, and the target nucleic acid. Droplets may be merged for example by: producing dielectrophoretic forces on the droplets using electric field gradients and then controlling the forces to cause the droplets to merge; producing droplets of different sizes that thus travel at different velocities, which causes the droplets to merge; and producing droplets having different viscosities that thus travel at different velocities, which causes the droplets to merge with each other. Each of those techniques is further described in Link et al. (U.S. patent application numbers 2008/0014589, 2008/0003142, and 2010/0137163) and European publication number EP2047910 to Raindance Technologies Inc. Further description of producing and controlling dielectrophoretic forces on droplets to cause the droplets to merge is described in Link et al. (U.S. patent application number 2007/0003442) and European Patent Number EP2004316 to Raindance Technologies Inc.

[0058] Once final droplets have been produced, the droplets are thermal cycled, resulting in amplification of the target nucleic acid in each droplet. In certain embodiments, the droplets are flowed through a channel in a serpentine path between heating and cooling lines to amplify the nucleic acid in the droplet. The width and depth of the channel may be adjusted to set the residence time at each temperature, which can be controlled to anywhere between less than a second and minutes.

[0059] In certain embodiments, the three temperature zones are used for the amplification reaction. The three temperature zones are controlled to result in denaturation of double stranded nucleic acid (high temperature zone), annealing of primers (low temperature zones), and amplification of single stranded nucleic acid to produce double stranded nucleic acids (intermediate temperature zones). The temperatures within these zones fall within ranges well known in the art for conducting PCR reactions. See for example, Sambrook et al. (Molecular Cloning, A Laboratory Manual, 3rd edition, Cold Spring Harbor Laboratory Press, Cold Spring Harbor, N.Y., 2001).

[0060] In certain embodiments, the three temperature zones are controlled to have temperatures as follows: 95° C. (T_H), 55° C. (T_L), 72° C. (T_M). The prepared sample droplets flow through the channel at a controlled rate. The sample droplets first pass the initial denaturation zone (T_H) before thermal cycling. The initial preheat is an extended zone to ensure that nucleic acids within the sample droplet have denatured successfully before thermal cycling. The requirement for a preheat zone and the length of denaturation time required is dependent on the chemistry being used in the reaction. The samples pass into the high temperature zone, of approximately 95° C., where the sample is first separated into single stranded DNA in a process called denaturation. The sample then flows to the low temperature, of approximately 55° C., where the hybridization process takes place, during which the primers anneal to the complementary sequences of the sample. Finally, as the sample flows through the third medium temperature, of approximately 72° C., the polymerase process occurs when the primers are extended along the single strand of DNA with a thermostable enzyme.

[0061] The nucleic acids undergo the same thermal cycling and chemical reaction as the droplets passes through each thermal cycle as they flow through the channel. The total number of cycles in the device is easily altered by an extension of thermal zones. The sample undergoes the same thermal cycling and chemical reaction as it passes through N amplification cycles of the complete thermal device.

[0062] In other embodiments, the temperature zones are controlled to achieve two individual temperature zones for a PCR reaction. In certain embodiments, the two temperature zones are controlled to have temperatures as follows: 95° C. (T_H) and 60° C. (T_L). The sample droplet optionally flows through an initial preheat zone before entering thermal cycling. The preheat zone may be important for some chemistry for activation and also to ensure that double stranded nucleic acid in the droplets are fully denatured before the thermal cycling reaction begins. In an exemplary embodiment, the preheat dwell length results in approximately 10 minutes preheat of the droplets at the higher temperature.

[0063] The sample droplet continues into the high temperature zone, of approximately 95° C., where the sample is first separated into single stranded DNA in a process called denaturation. The sample then flows through the device to the low

temperature zone, of approximately 60° C., where the hybridization process takes place, during which the primers anneal to the complementary sequences of the sample. Finally the polymerase process occurs when the primers are extended along the single strand of DNA with a thermostable enzyme. The sample undergoes the same thermal cycling and chemical reaction as it passes through each thermal cycle of the complete device. The total number of cycles in the device is easily altered by an extension of block length and tubing.

Attaching Adapters

[0064] In certain embodiments adapter oligonucleotides are introduced into the droplet. Such introduction may be accomplished using any of the above described techniques. The adaptors are attached to the copy in a manner similar as to that described above for attaching a barcode sequence to the copy. See also Sabot et al. (U.S. patent application number 2009/0226975), Adessi et al. (U.S. Pat. No. 7,115,400), and Kawashima et al. (U.S. patent application number 2005/0100900), the content of each of which is incorporated by reference herein in its entirety. In certain embodiments, an "A" and a "B" adapter are introduced into each droplet. The "A" adapter and "B" adapter sequences correspond to two surface-bound amplification primers on a flow cell used for amplification of the nucleic acids prior to sequencing, as is discussed in greater detail below.

Attaching Beads

[0065] Beads may be introduced to the droplets including the nucleic acids from the different samples prior to or after amplification of the nucleic acids. Any of the above techniques may be used to introduce the beads to the droplets. The introduction of the beads to the droplets occur under reaction conditions such that the nucleic acids will bind to the beads to produce bead-bound nucleic acids.

[0066] In certain embodiments, the beads include universal oligonucleotides on the surface of the beads. Various methods can be used to anchor or immobilize the nucleic acid molecule to the surface of the substrate. See for example, Lapidus et al. (U.S. patent application number 20100216153), the content of which is incorporated by reference herein in its entirety. The immobilization can be achieved through direct or indirect bonding to the surface. The bonding can be by covalent linkage. See, Joos et al., Analytical Biochemistry 247:96-101, 1997; Oroskar et al., Clin. Chem. 42:1547-1555, 1996; and Khandjian, Mol. Bio. Rep. 11:107-115, 1986. An exemplary attachment is direct amine bonding of the 5' end of the oligonucleotide to an epoxide integrated on the surface. The bonding also can be through non-covalent linkage. For example, biotin-streptavidin (Taylor et al., J. Phys. D. Appl. Phys. 24:1443, 1991) and digoxigenin with anti-digoxigenin (Smith et al., Science 253:1122, 1992) are common tools for anchoring nucleic acids to surfaces and parallels. Other methods for known in the art for attaching nucleic acid molecules to substrates also can be used.

[0067] The nucleic acids may include a universal adapter that is complementary to the oligonucleotides on the surface of the beads. The adapter may be part of the one of the primers used in an amplification reaction to produce the amplified nucleic acids. Alternatively, the adapter may be attached to the nucleic acids after amplification. Attaching an adapter sequence to a nucleic acid is shown in Kahvejian et al. (U.S. patent application number 2008/0081330), the content of which is incorporated by reference herein in its entirety. In certain embodiments, the adapter is attached to the nucleic acid with an enzyme. The enzyme may be a ligase or a polymerase. The ligase may be any enzyme capable of ligating an oligonucleotide (RNA or DNA) to the enriched product. Suitable ligases include T4 DNA ligase and T4 RNA ligase (such ligases are available commercially, from New England Biolabs. Methods for using ligases are well known in the art. The polymerase may be any enzyme capable of adding nucleotides to the 3' terminus of a nucleic acid molecule. The polymerase may be, for example, yeast poly(A) polymerase, commercially available from USB. The polymerase is used according to the manufacturer's instructions. The adapter of the enriched product may hybridize to the oligonucleotides on the surface of the beads to form bead-bound enriched products. Thermal cycling may be conducted as necessary to facilitate binding of the enriched product to the oligonucleotides on the surface of the beads.

[0068] In another embodiment, the bead is introduced to the droplet prior to amplification, amplification of the nucleic acids in conducted in the presence of beads, and the amplified nucleic acid is attached to the bead. Droplet formation is discussed above. In this embodiment, the amplification reaction is conducted in the droplet. In certain embodiments, the amplification reaction is the polymerase chain reaction. In embodiments that involve PCR, reagents for a PCR reaction are included in the droplets. Such droplets generally include Taq polymerase, deoxynucleotides of type A, C, G and T, magnesium chloride, and forward and reverse primers, all suspended within an aqueous buffer.

[0069] The droplet now including nucleic acid, beads, and PCR reagents is thermal cycled as discussed above, resulting in amplification of the target nucleic acid in each droplet. One of the primers for the PCR reaction may include an adapter sequence. Thus upon completion of the PCR reaction, amplified nucleic acids will include an adapter sequence. The adapter sequence is complementary to an oligonucleotide sequence on the surface of the beads, and thus the amplified nucleic acids can bind the oligonucleotides on the surface of the beads to produce bead-bound amplified oligonucleotides. Thermal cycling may be conducted as necessary to facilitate binding of the amplified nucleic acid to the oligonucleotides on the surface of the beads.

Droplet Sorting

[0070] Methods of the invention may further include sorting the droplets. A sorting module may be a junction of a channel where the flow of droplets can change direction to enter one or more other channels, e.g., a branch channel, depending on a signal received in connection with a droplet interrogation in the detection module. Typically, a sorting module is monitored and/or under the control of the detection module, and therefore a sorting module may correspond to the detection module. The sorting region is in communication with and is influenced by one or more sorting apparatuses.

[0071] A sorting apparatus includes techniques or control systems, e.g., dielectric, electric, electro-osmotic, (micro-) valve, etc. A control system can employ a variety of sorting techniques to change or direct the flow of molecules, cells, small molecules or particles into a predetermined branch channel. A branch channel is a channel that is in communication with a sorting region and a main channel. The main channel can communicate with two or more branch channels at the sorting module or branch point, forming, for example,

a T-shape or a Y-shape. Other shapes and channel geometries may be used as desired. Typically, a branch channel receives droplets of interest as detected by the detection module and sorted at the sorting module. A branch channel can have an outlet module and/or terminate with a well or reservoir to allow collection or disposal (collection module or waste module, respectively) of the molecules, cells, small molecules or particles. Alternatively, a branch channel may be in communication with other channels to permit additional sorting.

[0072] A characteristic of a fluidic droplet may be sensed and/or determined in some fashion, for example, as described herein (e.g., fluorescence of the fluidic droplet may be determined), and, in response, an electric field may be applied or removed from the fluidic droplet to direct the fluidic droplet to a particular region (e.g. a channel). In certain embodiments, a fluidic droplet is sorted or steered by inducing a dipole in the uncharged fluidic droplet (which may be initially charged or uncharged), and sorting or steering the droplet using an applied electric field. The electric field may be an AC field, a DC field, etc. For example, a channel containing fluidic droplets and carrier fluid, divides into first and second channels at a branch point. Generally, the fluidic droplet is uncharged. After the branch point, a first electrode is positioned near the first channel, and a second electrode is positioned near the second channel. A third electrode is positioned near the branch point of the first and second channels. A dipole is then induced in the fluidic droplet using a combination of the electrodes. The combination of electrodes used determines which channel will receive the flowing droplet. Thus, by applying the proper electric field, the droplets can be directed to either the first or second channel as desired. Further description of droplet sorting is shown for example in Link et al. (U.S. patent application numbers 2008/0014589, 2008/0003142, and 2010/0137163) and European publication number EP2047910 to Raindance Technologies Inc.

Release of Nucleic Acids from Droplets

[0073] Methods of the invention may further involve releasing the nucleic acid from the droplets for further analysis. Methods of releasing amplified target molecules from the droplets are shown in for example in Link et al. (U.S. patent application numbers 2008/0014589, 2008/0003142, and 2010/0137163) and European publication number EP2047910 to Raindance Technologies Inc.

[0074] In certain embodiments, sample droplets are allowed to cream to the top of the carrier fluid. By way of non-limiting example, the carrier fluid can include a perfluorocarbon oil that can have one or more stabilizing surfactants. The droplet rises to the top or separates from the carrier fluid by virtue of the density of the carrier fluid being greater than that of the aqueous phase that makes up the droplet. For example, the perfluorocarbon oil used in one embodiment of the methods of the invention is 1.8, compared to the density of the aqueous phase of the droplet, which is 1.0.

[0075] The creamed liquids are then placed onto a second carrier fluid which contains a de-stabilizing surfactant, such as a perfluorinated alcohol (e.g. 1H,1H,2H,2H-Perfluoro-1-octanol). The second carrier fluid can also be a perfluorocarbon oil. Upon mixing, the aqueous droplets begins to coalesce, and coalescence is completed by brief centrifugation at low speed (e.g., 1 minute at 2000 rpm in a microcentrifuge). The coalesced aqueous phase can now be removed and the further analyzed.

Sequencing

[0076] In certain embodiments, the nucleic acids are sequenced. Sequencing may be by any method known in the art. Briefly, a single-stranded nucleic acid (e.g., DNA or cDNA) is hybridized to oligonucleotides attached to a surface of a flow cell. The single-stranded nucleic acids may be captured by methods known in the art, such as those shown in Lapidus (U.S. Pat. No. 7,666,593). The oligonucleotides may be covalently attached to the surface or various attachments other than covalent linking as known to those of ordinary skill in the art may be employed. Moreover, the attachment may be indirect, e.g., via the polymerases of the invention directly or indirectly attached to the surface. The surface may be planar or otherwise, and/or may be porous or non-porous, or any other type of surface known to those of ordinary skill to be suitable for attachment. The nucleic acid is then sequenced by imaging the polymerase-mediated addition of fluorescently-labeled nucleotides incorporated into the growing strand surface oligonucleotide, at single molecule resolution.

[0077] In certain embodiments, nucleic acids are prepared for sequencing using the ILLUMINA sequencing technology. The universal portion of the first and second oligonucleotides is used as a primer site to attach "A" and "B" adaptors to the copy. The adaptors are attached to the copy in a manner similar as to that described above for attaching a barcode sequence to the copy. See also Sabot et al. (U.S. patent application number 2009/0226975), Adessi et al. (U.S. Pat. No. 7,115,400), and Kawashima et al. (U.S. patent application number 2005/0100900), the content of each of which is incorporated by reference herein in its entirety. The "A" adapter and "B" adapter sequences correspond to two surface-bound amplification primers on a flow cell used for amplification of the copy prior to sequencing.

[0078] As just mentioned, the flow cell surface is coated with single stranded oligonucleotides that correspond to the sequences of the adapters attached to the copy. In a next step, suitable conditions are applied to the immobilized single stranded copy and the plurality of amplification primer oligonucleotides such that the single stranded copy hybridizes to an amplification primer oligonucleotide to form a complex in the form of a bridge structure. Suitable conditions such as neutralizing and/or hybridizing buffers are well known in the art (See Sambrook et al., supra; Ausubel et al., Current Protocols in Molecular Biology, John Wiley and Sons, Baltimore, Md. (1998)). The neutralising and/or hybridising buffer may then be removed.

[0079] Next by applying suitable conditions for extension, an extension reaction is performed. The primer oligonucleotide of the complex is extended by sequential addition of nucleotides to generate an extension product complimentary to the single stranded polynucleotide molecule. The resulting duplex is immobilized at both 5' ends such that each strand is immobilized.

[0080] Suitable conditions such as extension buffers/solutions comprising an enzyme with polymerase activity are well known in the art (See Sambrook et al., supra; Ausubel et al. supra). In a particular embodiment dNTP's may be included in the extension buffer. In a further embodiment dNTP's could be added prior to the extension buffer. This bridge amplification technique can be carried out as described, for example, in Adessi et al. (U.S. Pat. No. 7,115,400), and Kawashima et al. (U.S. patent application number 2005/0100900), the contents of which are incorporated herein by reference.

[0081] After the hybridization and extension steps, the support and attached nucleic acids can be subjected to denaturation conditions. A flow cell can be used such that, the exten-

sion buffer is generally removed by the influx of the denaturing buffer. Suitable denaturing buffers are well known in the art (See Sambrook et al., supra; Ausubel et al. supra). By way of example it is known that alterations in pH and low ionic strength solutions can denature nucleic acids at substantially isothermal temperatures. Formamide and urea form new hydrogen bonds with the bases of nucleic acids disrupting hydrogen bonds that lead to Watson-Crick base pairing. In a particular embodiment the concentration of formamide is 50% or more. These result in single stranded nucleic acid molecules. If desired, the strands may be separated by treatment with a solution of very low salt (for example less than 0.01 M cationic conditions) and high pH (>12) or by using a chaotropic salt (e.g. guanidinium hydrochloride). In a particular embodiment a strong base is used. A strong base is a basic chemical compound that is able to deprotonate very weak acids in an acid base reaction. The strength of a base is indicated by its pK.sub.b value, compounds with a pK_b value of less than about 1 are called strong bases and are well known to one skilled in the art. In a particular embodiment the strong base is Sodium Hydroxide (NaOH) solution used at a concentration of from 0.05 M to 0.25 M, particularly 0.1 M.

[0082] Following the hybridization, extension and denaturation steps exemplified above, two immobilized nucleic acids will be present, the first being the first template single stranded polynucleotide molecule (that was initially immobilized) and the second being a nucleic acid complementary thereto, extending from one of the immobilized primer oligonucleotides. Both the original immobilized single stranded polynucleotide molecule and the immobilized extended primer oligonucleotide formed are then able to initiate further rounds of amplification by subjecting the support to further cycles of hybridization, extension and denaturation.

[0083] It may be advantageous to perform optional washing steps in between each step of the amplification method. For example an extension buffer without polymerase enzyme with or without dNTP's could be applied to the solid support before being removed and replaced with the full extension buffer.

[0084] Such further rounds of amplification can be used to produce a nucleic acid colony or cluster comprising multiple immobilized copies of the single stranded polynucleotide sequence and its complementary sequence.

[0085] The initial immobilization of the single stranded polynucleotide molecule means that the single stranded polynucleotide molecule can hybridize with primer oligonucleotides located at a distance within the total length of the single stranded polynucleotide molecule. Other surface bound primers that are out of reach will not hybridize to the polynucleotide. Thus the boundary of the nucleic acid colony or cluster formed is limited to a relatively local area surrounding the location in which the initial single stranded polynucleotide molecule was immobilized.

[0086] Once more copies of the single stranded polynucleotide molecule and its complement have been synthesized by carrying out further rounds of amplification, i.e. further rounds of hybridization, extension and denaturation, then the boundary of the nucleic acid colony or cluster being generated will be able to be extended further, although the boundary of the colony formed is still limited to a relatively local area around the location in which the initial single stranded polynucleotide molecule was immobilized. For example the size of each amplified cluster may be 0.5-5 microns.

[0087] It can thus be seen that the method of the present invention allows the generation of a plurality of nucleic acid colonies from multiple single immobilized single stranded polynucleotide molecules and that the density of these colonies can be controlled by altering the proportions of modified capture/amplification oligonucleotides used to graft the surface of the solid support.

[0088] In a particular aspect, clustered arrays of nucleic acid colonies are prepared, analogous to those described in U.S. Pat. No. 7,115,400, US 2005/0100900 A1, WO 00/18957 and WO 98/44151 (the contents of which are herein incorporated by reference), by solid-phase amplification.

[0089] A sequencing reaction is then conducted. The initiation point for the sequencing reaction may be provided by annealing of a sequencing primer to a product of the solid-phase amplification reaction. In this connection, one or both of the adaptors added during formation of the template library may include a nucleotide sequence which permits annealing of a sequencing primer to amplified products derived by whole genome or solid-phase amplification of the template library.

[0090] The products of solid-phase amplification reactions wherein both forward and reverse amplification primers are covalently immobilized on the solid surface are so-called bridged structures formed by annealing of pairs of immobilized polynucleotide strands and immobilized complementary strands, both strands being attached to the solid support at the 5' end. Arrays comprised of such bridged structures provide inefficient templates for typical nucleic acid sequencing techniques, since hybridization of a conventional sequencing primer to one of the immobilized strands is not favored compared to annealing of this strand to its immobilized complementary strand under standard conditions for hybridization.

[0091] In order to provide more suitable templates for nucleic acid sequencing, it may be advantageous to remove or displace substantially all or at least a portion of one of the immobilized strands in the bridged structure in order to generate a template which is at least partially single-stranded. The portion of the template which is single-stranded will thus be available for hybridization to a sequencing primer. The process of removing all or a portion of one immobilized strand in a 'bridged' double-stranded nucleic acid structure may be referred to herein as linearization, and is described in further detail in WO07010251, the contents of which are incorporated herein by reference in their entirety.

[0092] Bridged template structures may be linearized by cleavage of one or both strands with a restriction endonuclease or by cleavage of one strand with a nicking endonuclease. Other methods of cleavage can be used as an alternative to restriction enzymes or nicking enzymes, including inter alia chemical cleavage (e.g. cleavage of a diol linkage with periodate), cleavage of abasic sites by cleavage with endonuclease (for example 'USER', as supplied by NEB, part number M5505S), or by exposure to heat or alkali, cleavage of ribonucleotides incorporated into amplification products otherwise comprised of deoxyribonucleotides, photochemical cleavage or cleavage of a peptide linker.

[0093] Following the cleavage step, regardless of the method used for cleavage, the product of the cleavage reaction may be subjected to denaturing conditions in order to remove the portion(s) of the cleaved strand(s) that are not attached to the solid support. Suitable denaturing conditions, for example sodium hydroxide solution, formamide solution or heat, will be apparent to the skilled reader with reference to

standard molecular biology protocols (Sambrook et al., supra; Ausubel et al. supra). Denaturation results in the production of a sequencing template which is partially or substantially single-stranded. A sequencing reaction may then be initiated by hybridization of a sequencing primer to the single-stranded portion of the template.

[0094] Thus, the invention encompasses methods wherein the nucleic acid sequencing reaction comprises hybridizing a sequencing primer to a single-stranded region of a linearized amplification product, sequentially incorporating one or more nucleotides into a polynucleotide strand complementary to the region of amplified template strand to be sequenced, identifying the base present in one or more of the incorporated nucleotide(s) and thereby determining the sequence of a region of the template strand.

[0095] One sequencing method which can be used in accordance with the invention relies on the use of modified nucleotides having removable 3' blocks, for example as described in WO04018497, US 2007/0166705A1 and U.S. Pat. No. 7,057,026, the contents of which are incorporated herein by reference in their entirety. Once the modified nucleotide has been incorporated into the growing polynucleotide chain complementary to the region of the template being sequenced there is no free 3'-OH group available to direct further sequence extension and therefore the polymerase can not add further nucleotides. Once the nature of the base incorporated into the growing chain has been determined, the 3' block may be removed to allow addition of the next successive nucleotide. By ordering the products derived using these modified nucleotides, it is possible to deduce the DNA sequence of the DNA template. Such reactions can be done in a single experiment if each of the modified nucleotides has a different label attached thereto, known to correspond to the particular base, to facilitate discrimination between the bases added during each incorporation step. Alternatively, a separate reaction may be carried out containing each of the modified nucleotides separately.

[0096] The modified nucleotides may carry a label to facilitate their detection. A fluorescent label, for example, may be used for detection of modified nucleotides. Each nucleotide type may thus carry a different fluorescent label, for example, as described in WO07135368, the contents of which are incorporated herein by reference in their entirety. The detectable label need not, however, be a fluorescent label. Any label can be used which allows the detection of an incorporated nucleotide.

[0097] One method for detecting fluorescently labeled nucleotides comprises using laser light of a wavelength specific for the labelled nucleotides, or the use of other suitable sources of illumination. The fluorescence from the label on the nucleotide may be detected by a CCD camera or other suitable detection means. Suitable instrumentation for recording images of clustered arrays is described in WO07123744, the contents of which are incorporated herein by reference in their entirety.

[0098] The invention is not intended to be limited to use of the sequencing method outlined above, as essentially any sequencing methodology which relies on successive incorporation of nucleotides into a polynucleotide chain can be used. Suitable alternative techniques include, for example, the Genome Sequencers from Roche/454 Life Sciences (Margulies et al. (2005) Nature, 437:376-380; U.S. Pat. Nos. 6,274,320; 6,258,568; 6,210,891), and the SOLiD system from Applied Biosystems (solid.appliedbiosystems.com), and the sequencer from Ion Torrent (www.iontorrent.com).

INCORPORATION BY REFERENCE

[0099] References and citations to other documents, such as patents, patent applications, patent publications, journals, books, papers, web contents, have been made throughout this disclosure. All such documents are hereby incorporated herein by reference in their entirety for all purposes.

EQUIVALENTS

[0100] The invention may be embodied in other specific forms without departing from the spirit or essential characteristics thereof. The foregoing embodiments are therefore to be considered in all respects illustrative rather than limiting on the invention described herein.

What is claimed is:

1. A method for preparing a droplet for multiplex chemical reactions, the method comprising:
obtaining a plurality of different reactant molecules;
attaching a unique identifier to said reactant molecules; and
forming a droplet comprising said reactant molecules.

2. The method of claim **1**, wherein said reactant molecules are nucleic acids or proteins.

3. The method according to claim **2**, wherein the identifier is a barcode oligonucleotide.

4. The method according to claim **1**, further comprising the step of conducting a chemical reaction on said reactant molecules.

5. The method of claim **4**, wherein said chemical reaction is a sequencing reaction.

6. The method of claim **4**, wherein said chemical reaction is a nucleic acid amplification reaction.

7. The method of claim **6**, wherein said amplification reaction is selected from PCR, QPCR, and rolling circle amplification.

8. The method of claim **4**, wherein said forming step comprises flowing a stream of sample fluid comprising said reactant molecules, such that the sample fluid stream intersects two opposing streams of flowing carrier fluid, wherein said carrier fluid is immiscible with said sample fluid.

9. The method according to claim **1**, wherein said forming step comprises merging at least two droplets, wherein each droplet comprises reactant molecules obtained from different samples.

10. The method according to claim **4**, further comprising detecting products of the reaction in the droplet.

11. The method according to claim **1**, further comprising the steps of:
introducing adapter oligonucleotides into the droplet; and
attaching the adapter oligonucleotides to the nucleic acids in the droplet.

12. The method according to claim **11**, further comprising releasing the nucleic acids from the droplet.

13. The method of claim **12**, further comprising the step of sequencing released nucleic acid.

14. The method according to claim **1**, further comprising the steps of:
introducing beads into the droplet; and
attaching the nucleic acids in the droplet to the beads.

15. The method according to claim **14**, further comprising releasing the bead-bound nucleic acids from the droplet.

16. The method of claim **15**, further comprising sequencing released nucleic acids.

17. The method according to claim **1**, wherein the droplet is flowing through a channel.

18. The method according to claim **17**, wherein the droplet is surrounded by an immiscible carrier fluid.

19. The method according to claim **18**, wherein the immiscible carrier fluid is an oil.

20. The method according to claim **19**, wherein the oil comprises a surfactant.

21. The method according to claim **20**, wherein the surfactant is a fluorosurfactant.

22. A method for multiplexing samples, the method comprising: forming a droplet comprising nucleic acid from different samples, wherein a unique oligonucleotide sequence is attached to the nucleic acid from each sample so that the nucleic acids from the different samples can be differentiated from each other.

23. A composition comprising nucleic acids from a plurality of different samples in a droplet.

24. The composition according to claim **23**, wherein the nucleic acid from each sample is differentially labeled.

25. The composition according to claim **24**, wherein the label is a barcode oligonucleotide.

26. The composition according to claim **23**, wherein the droplet comprises a first fluid that is surrounded by a second fluid that is immiscible with the first fluid.

27. The composition according to claim **26**, wherein the second fluid is oil.

28. The composition according to claim **27**, wherein the oil comprises a surfactant.

29. The composition according to claim **28**, wherein the surfactant is a fluorosurfactant.

* * * * *