US 20030230443A1

(19) United States

(12) Patent Application Publication

(10) Pub. No.: US 2003/0230443 A1

(43) Pub. Date: Dec. 18, 2003

Cramer et al.

(54) ADVANCED COMPOSITE HYBRID-ELECTRIC VEHICLE

(76) Inventors: **David Cramer**, Basalt, CO (US); **David Taggart**, San Carlos, CA (US); **Timothy Moore**, Boulder, CO (US); **David Cooper**, Witney (GB); **Serve Ploumen**, Mechelen (NL); **Malcolm Sim**, Swindon (GB); **David Wareing**, Peterborough (GB); **Chris Wright**, Beacon Cove (AU)

Correspondence Address:
MICHAEL D. BEDNAREK
SHAW PITTMAN
1650 TYSONS BOULEVARD
MCLEAN, VA 22102 (US)

(21) Appl. No.: **10/337,730**

(22) Filed: **Jan. 8, 2003**

Related U.S. Application Data

(60) Provisional application No. 60/345,638, filed on Jan. 8, 2002. Provisional application No. 60/350,015, filed on Jan. 23, 2002.

Publication Classification

(51) **Int. Cl.**[7] **B60K 1/00**

(52) **U.S. Cl.** **180/65.5**

(57) **ABSTRACT**

An advanced composite hybrid-electric vehicle including one or more of lightweight, advanced composite structures, modular rear suspension and traction motor units, fuel-cell hybrid-electric powertrains, integrated electromagnetic and pneumatic suspension systems, and a digital network-based control system and information management architecture that uses a fault tolerant ring main power supply.

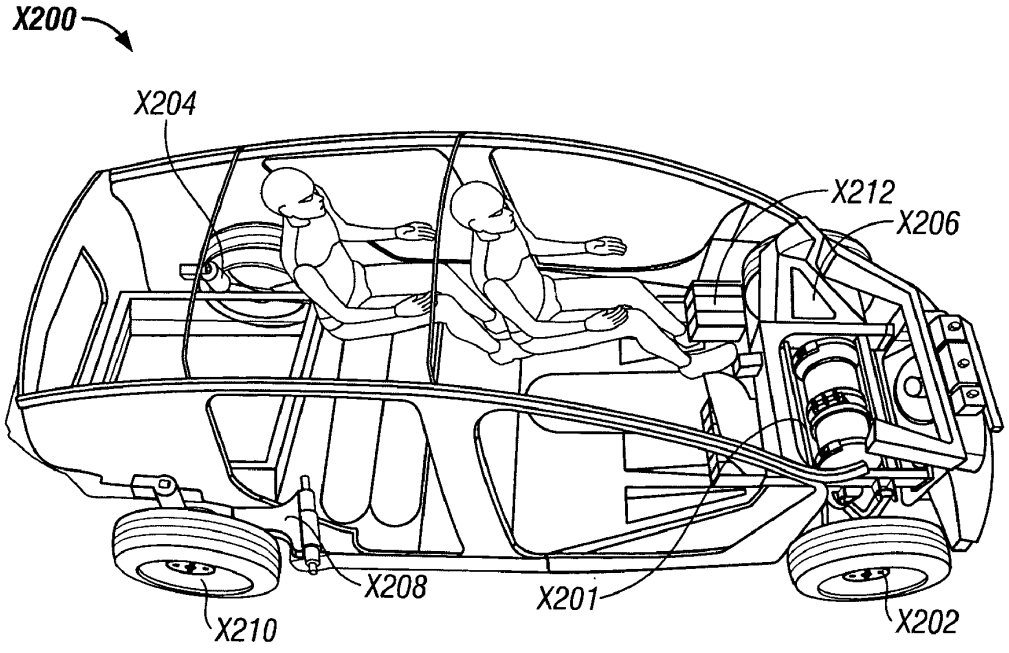

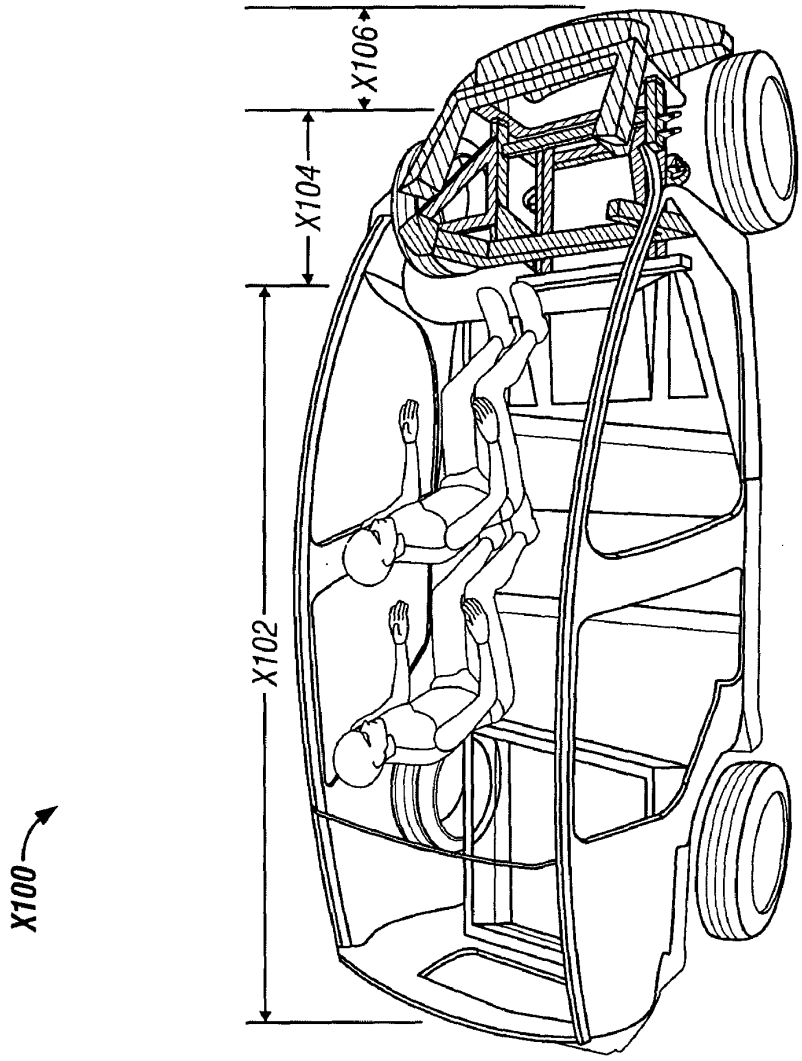

FIG. 1

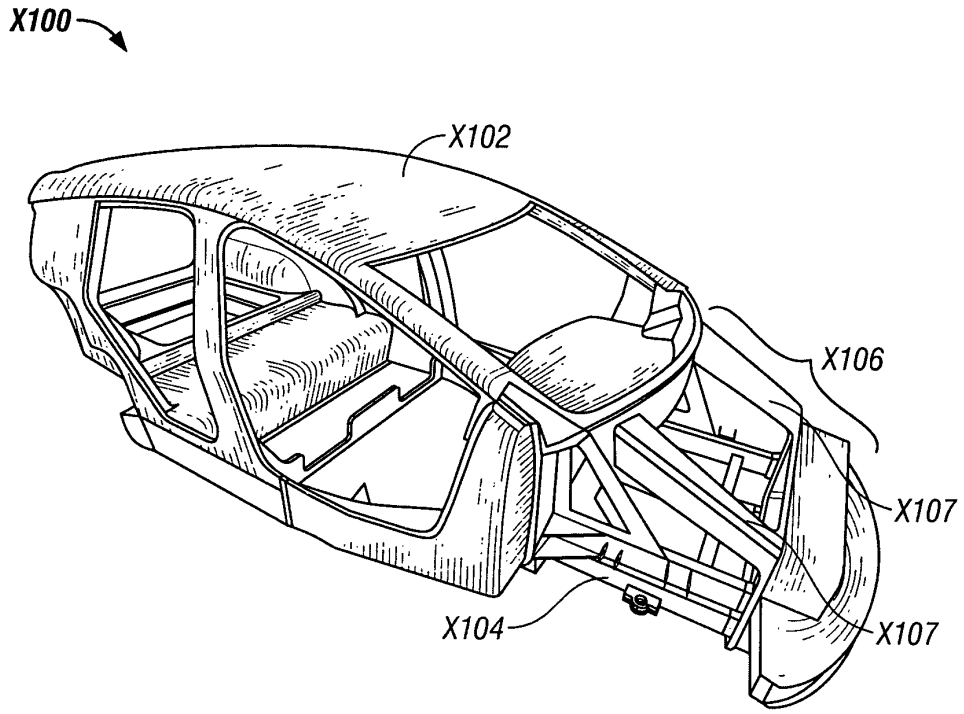

FIG. 2

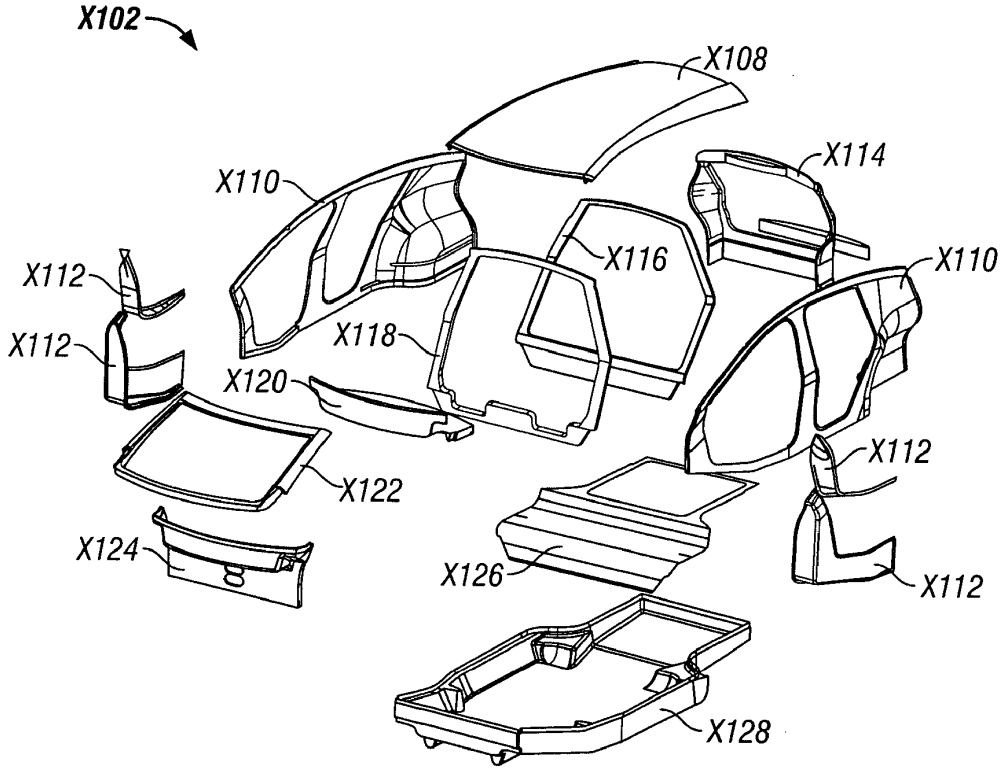
X102
X108
X114
X110
X116
X110
X112
X112
X118
X120
X112
X122
X124
X126
X112
X128

FIG. 3

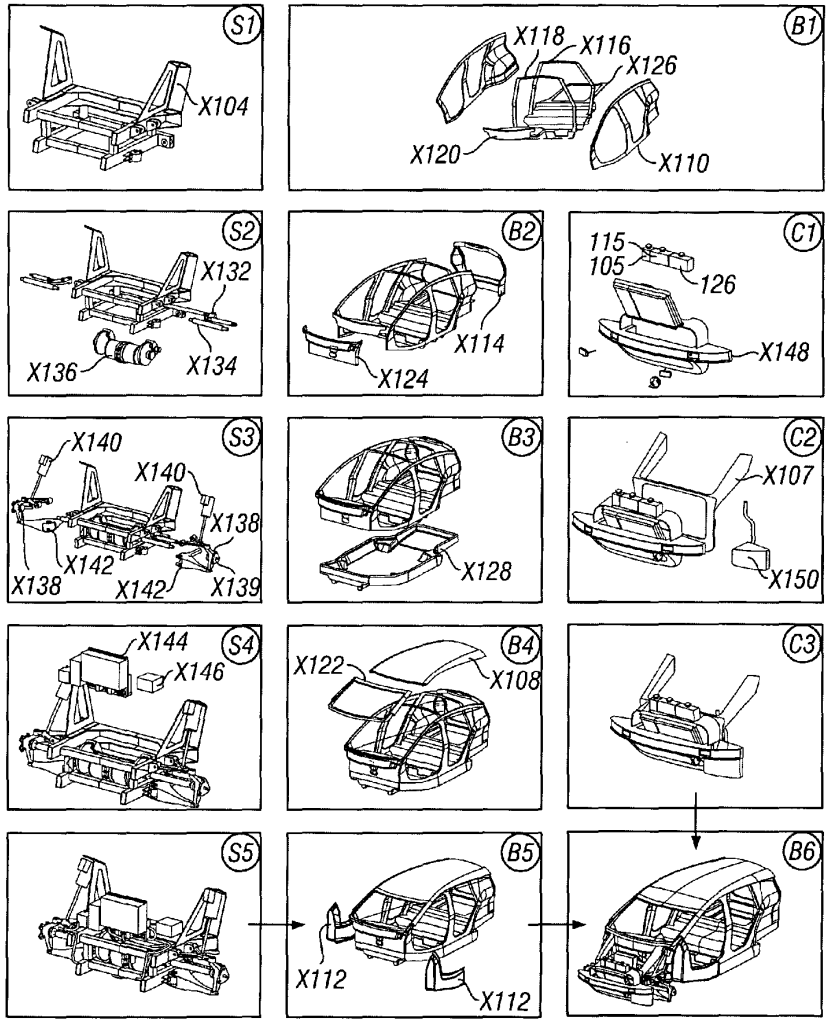
S1
X104
B1
X118
X116
X126
X120
X110
S2
X132
X136
X134
B2
X114
X124
C1
115
105
126
X148
S3
X140
X140
X138
X142
X138
X142
X139
B3
X128
C2
X107
X150
S4
X144
X146
B4
X122
X108
C3
S5
B5
X112
X112
B6

FIG. 4

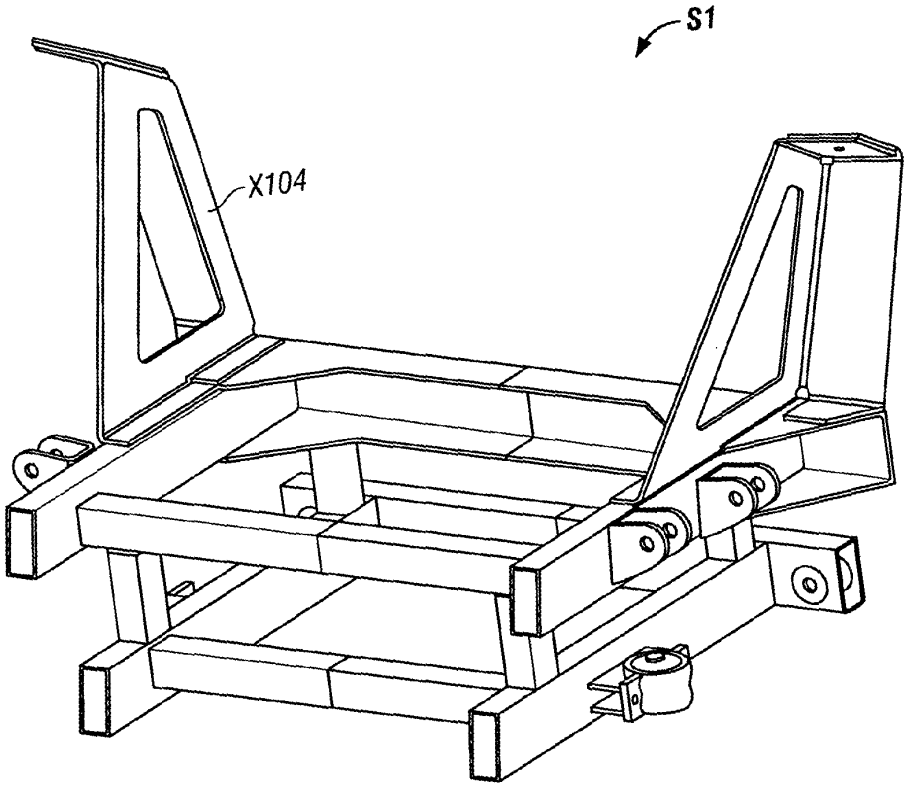

FIG. 4A

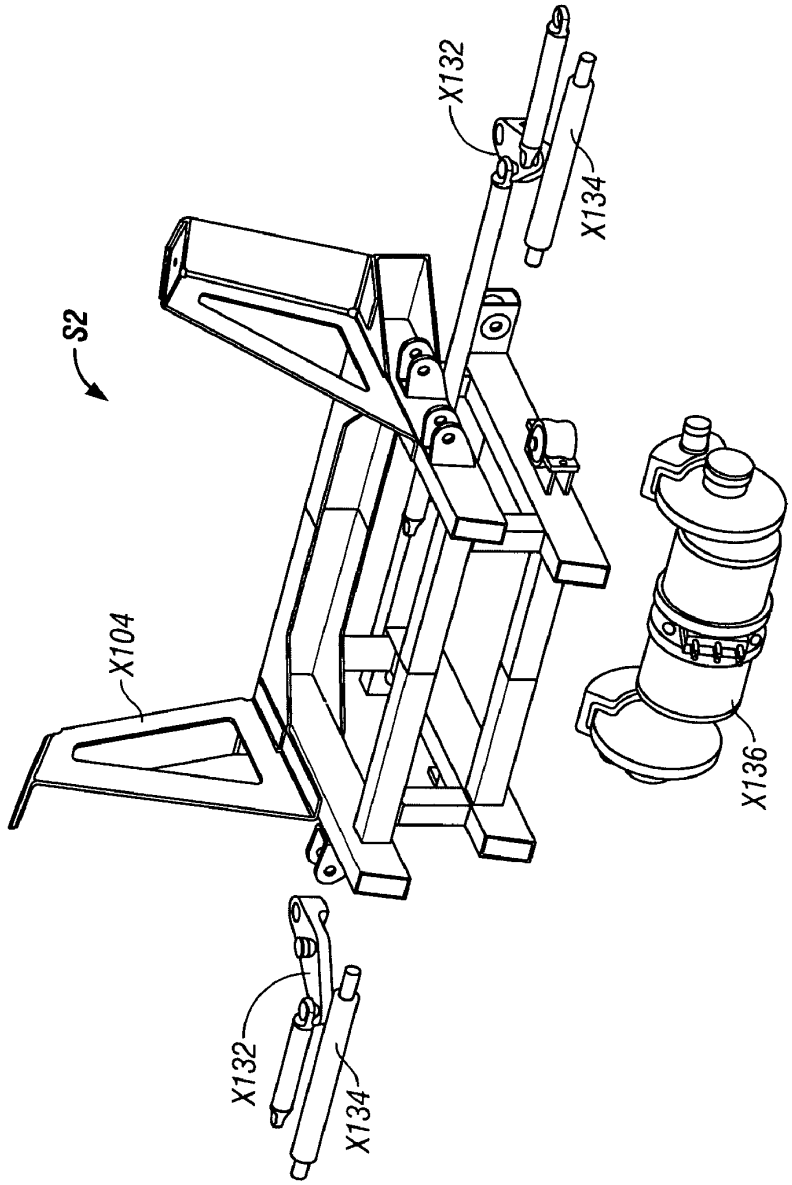

FIG. 4B

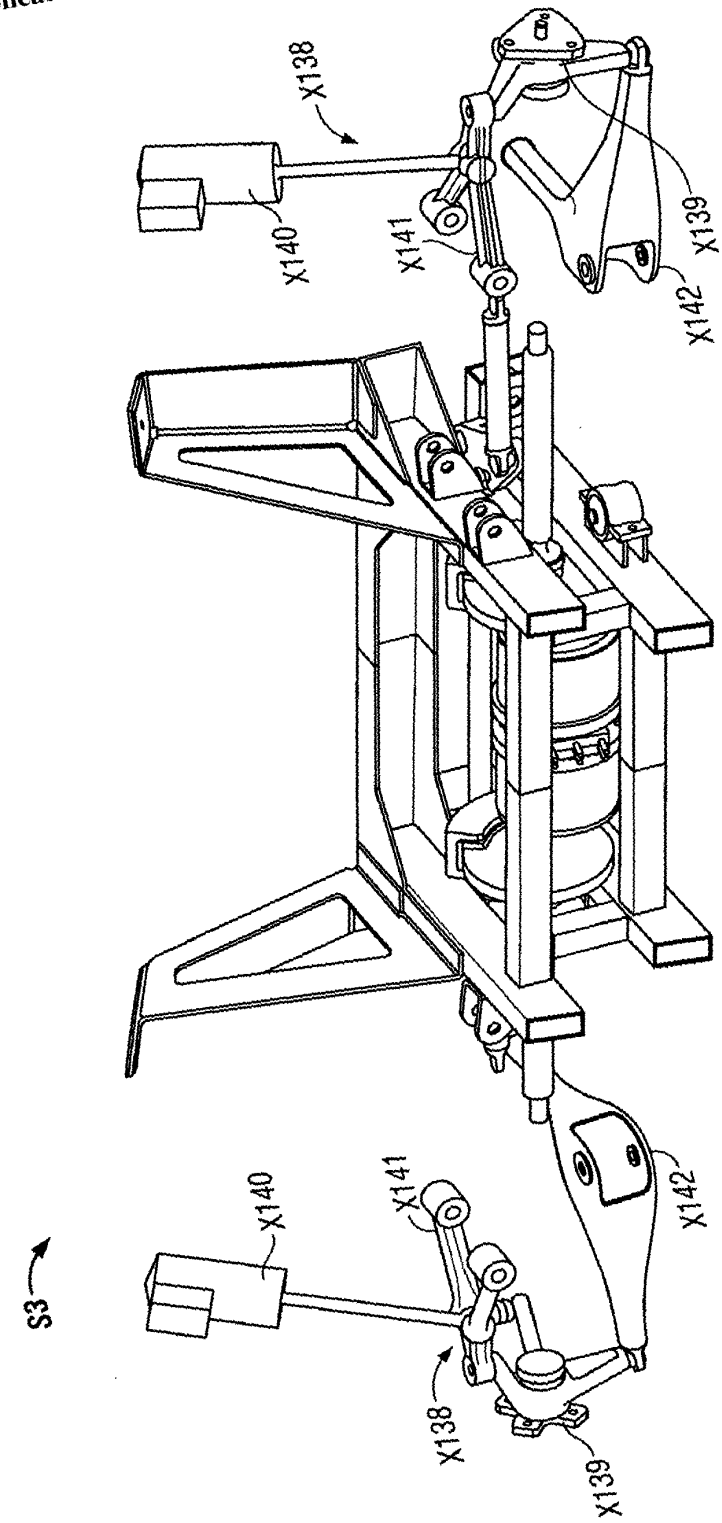

FIG. 4C

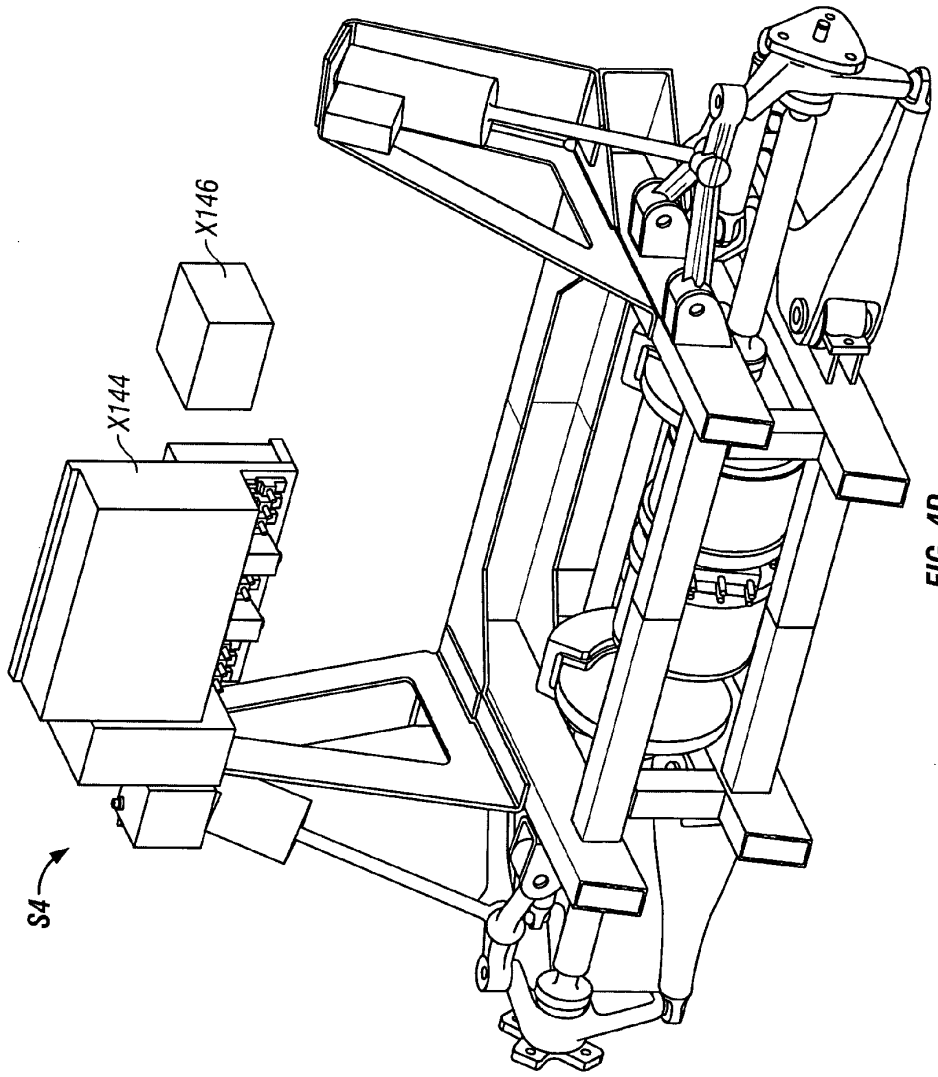

FIG. 4D

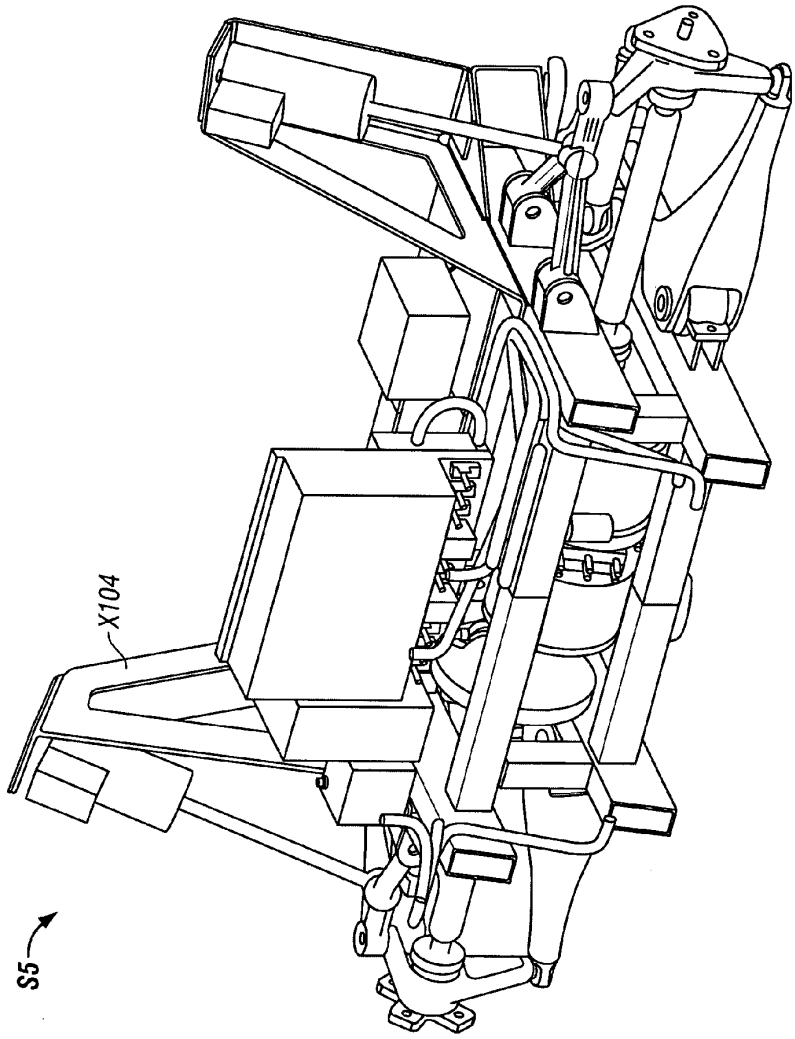

FIG. 4E

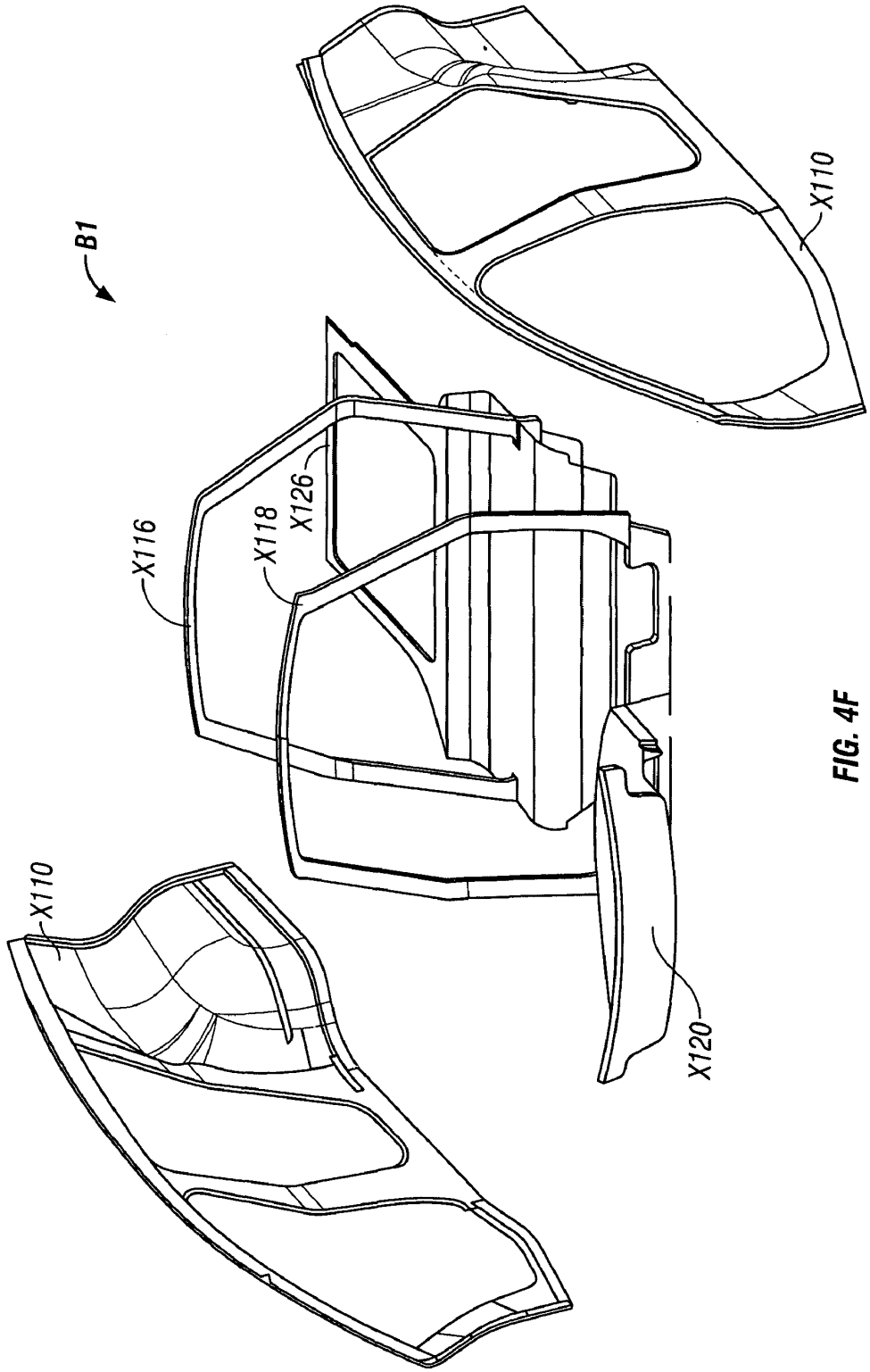

FIG. 4F

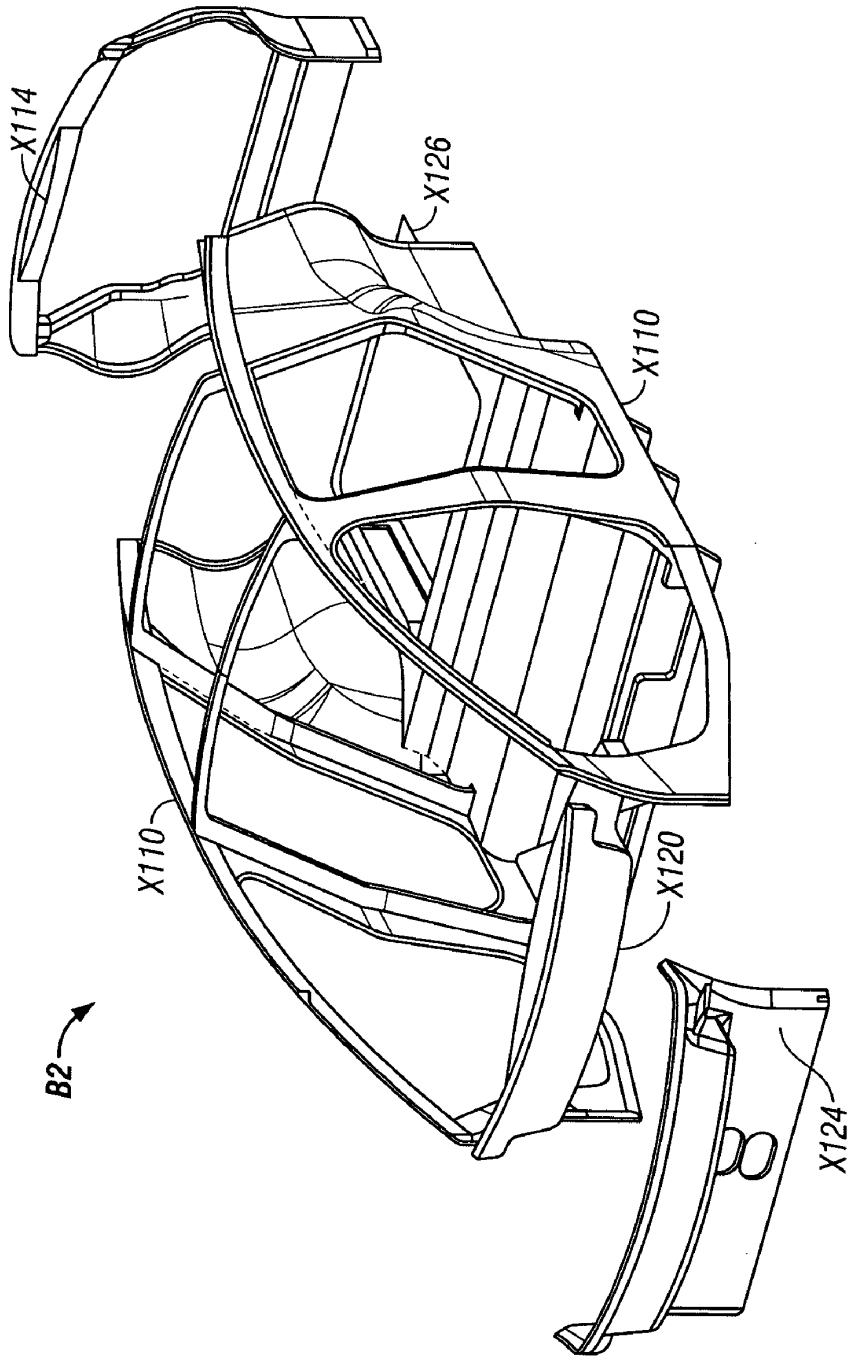

FIG. 4G

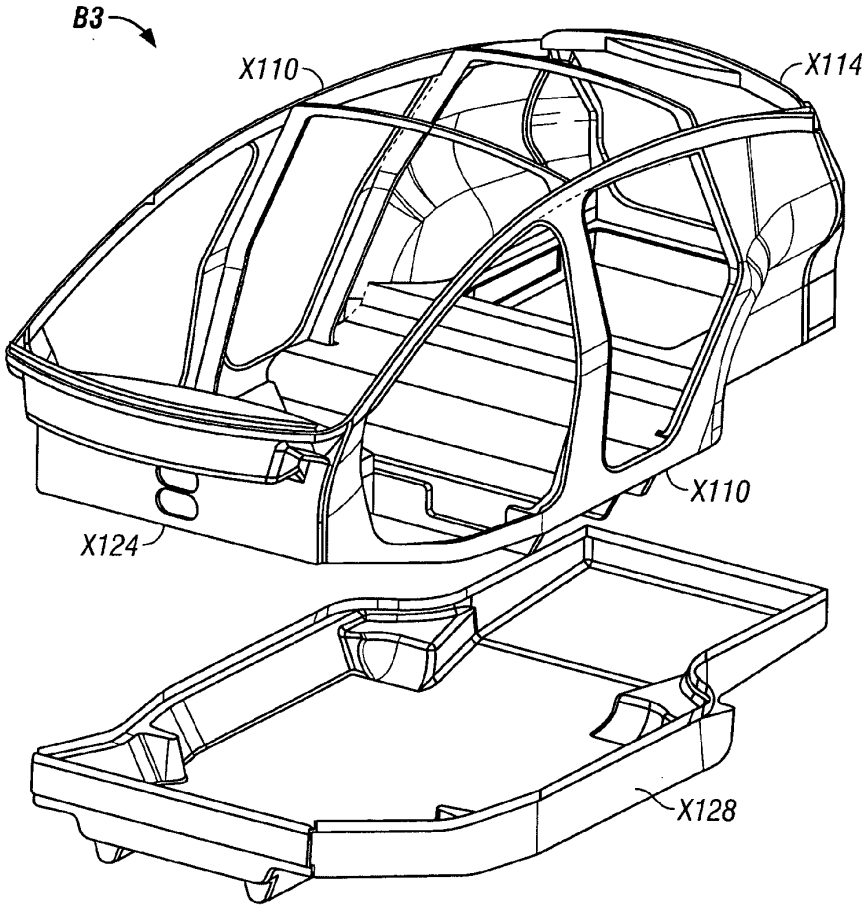

FIG. 4H

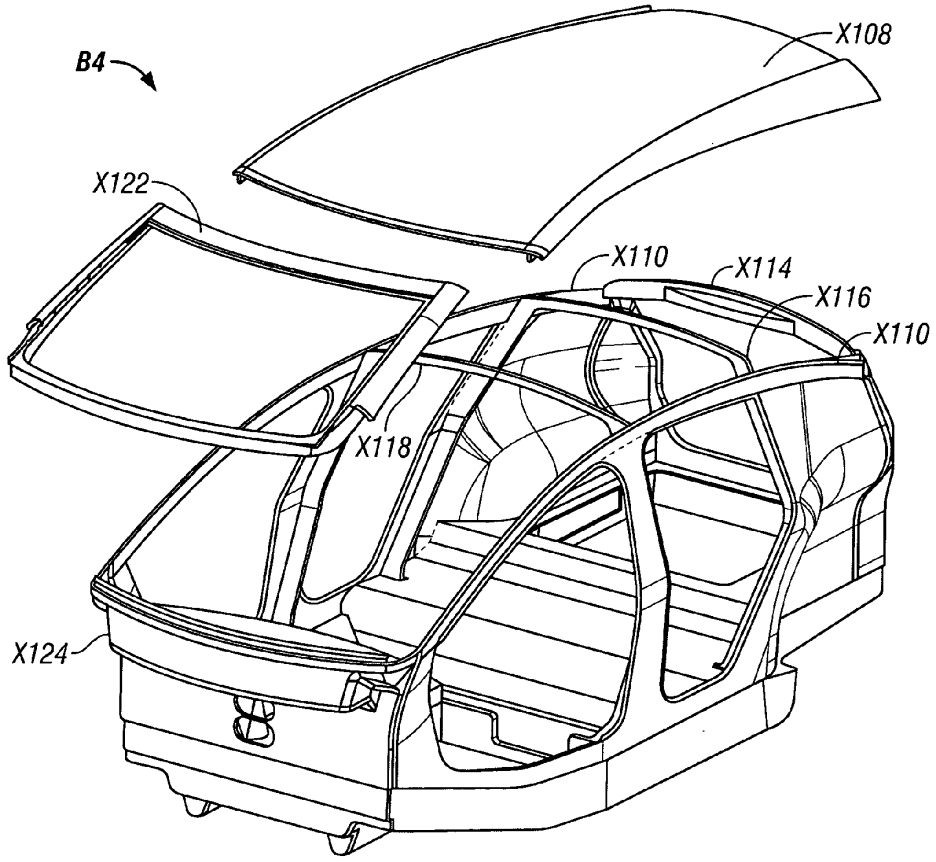

FIG. 4I

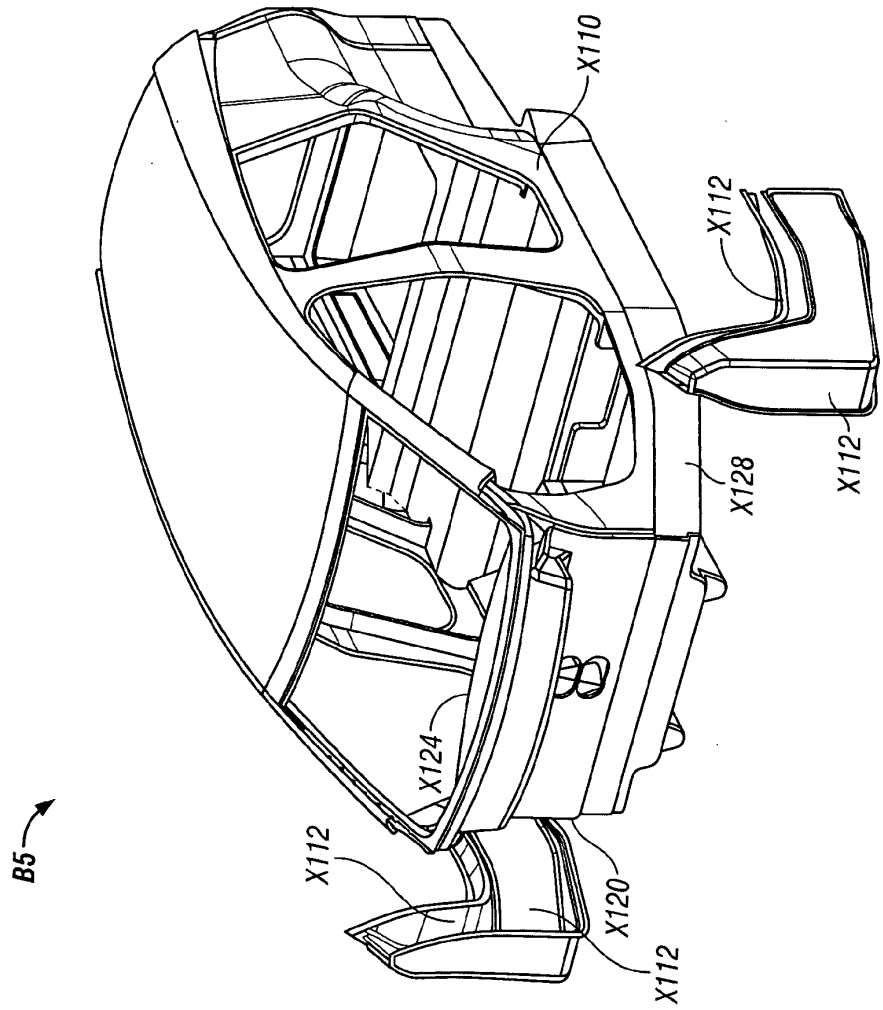

FIG. 4J

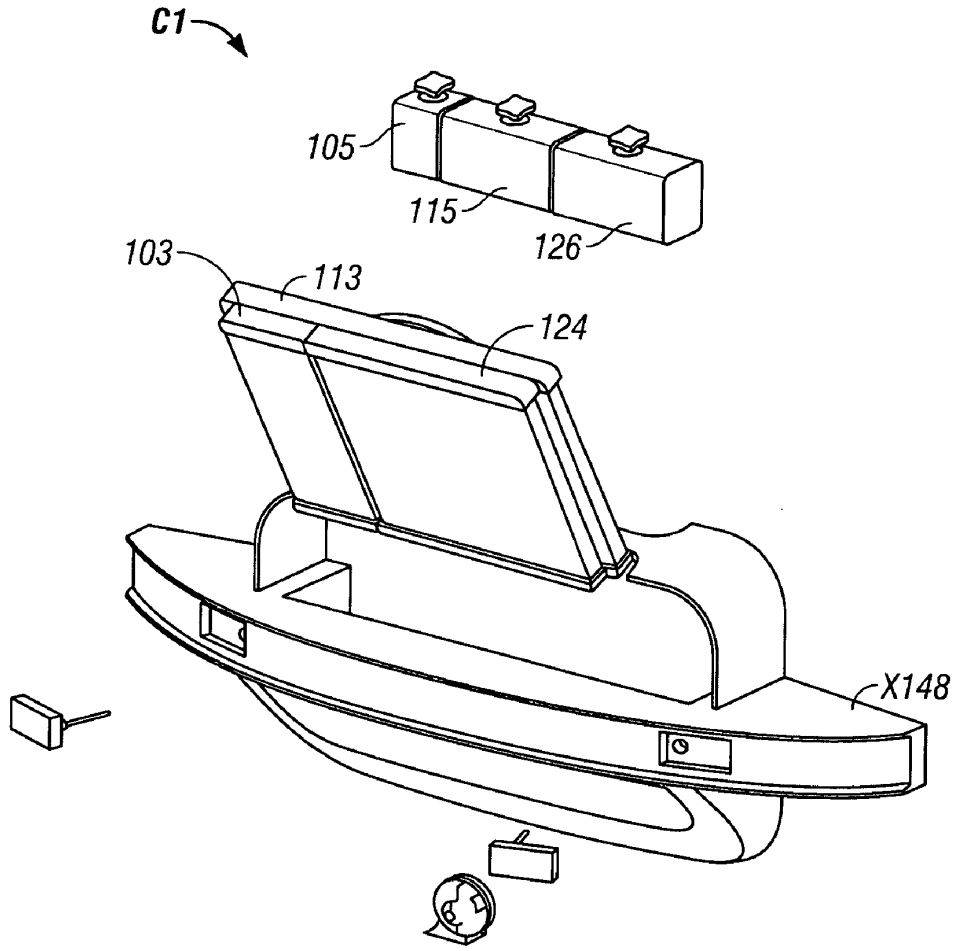

FIG. 4K

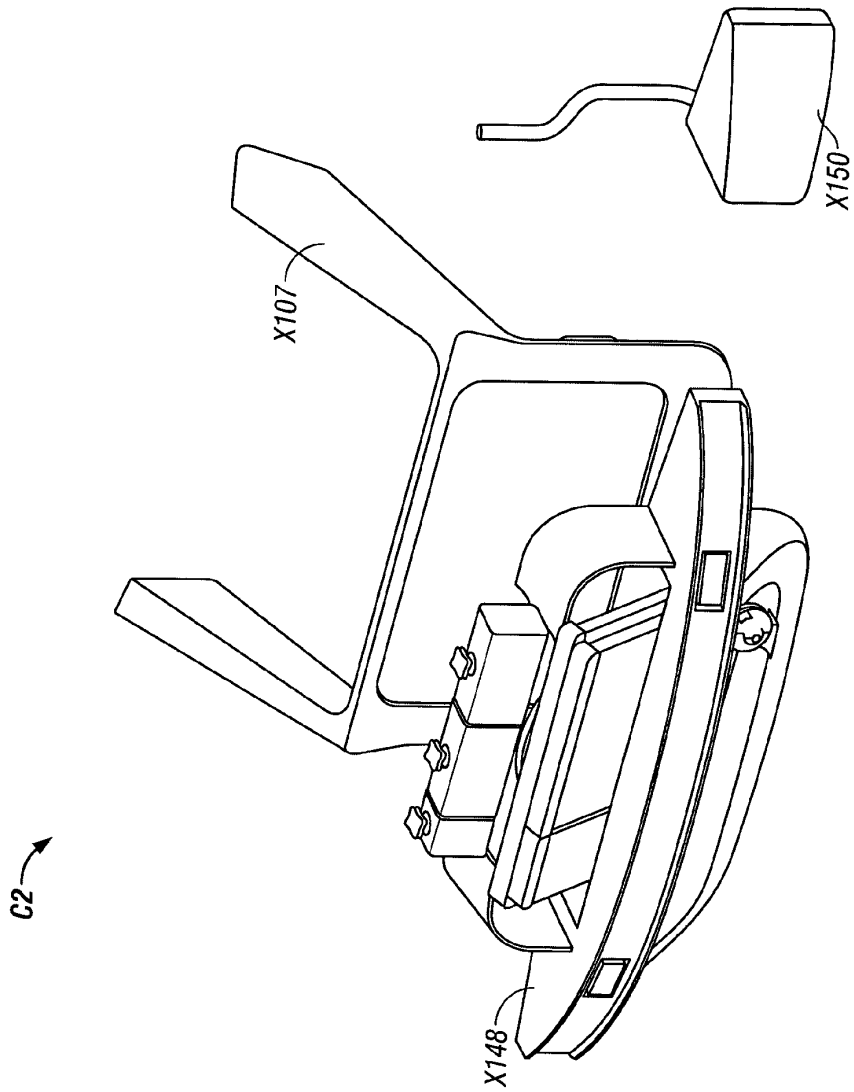

FIG. 4L

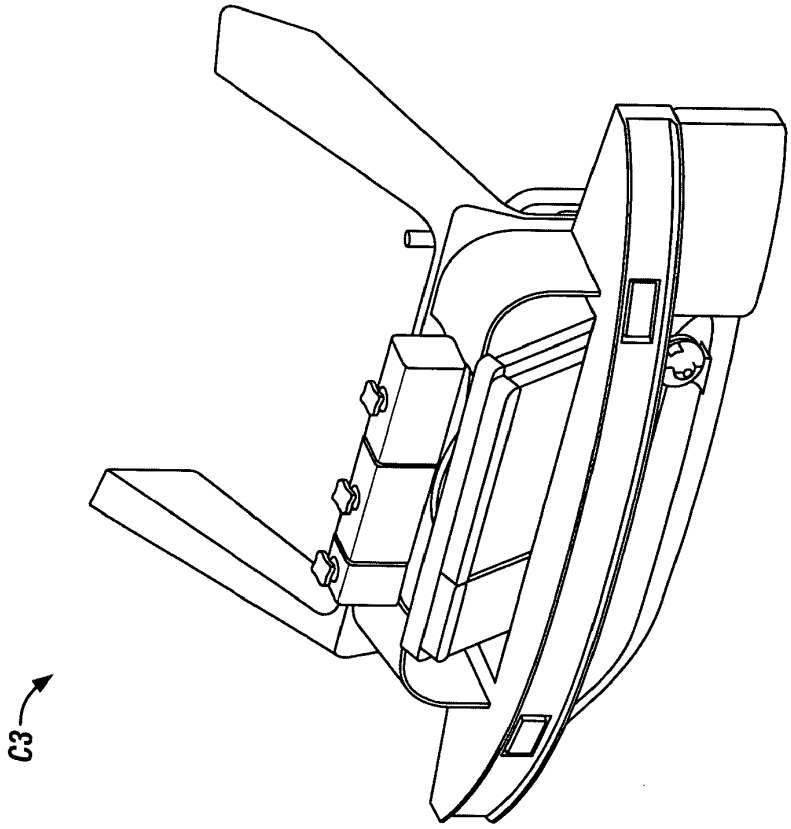

FIG. 4M

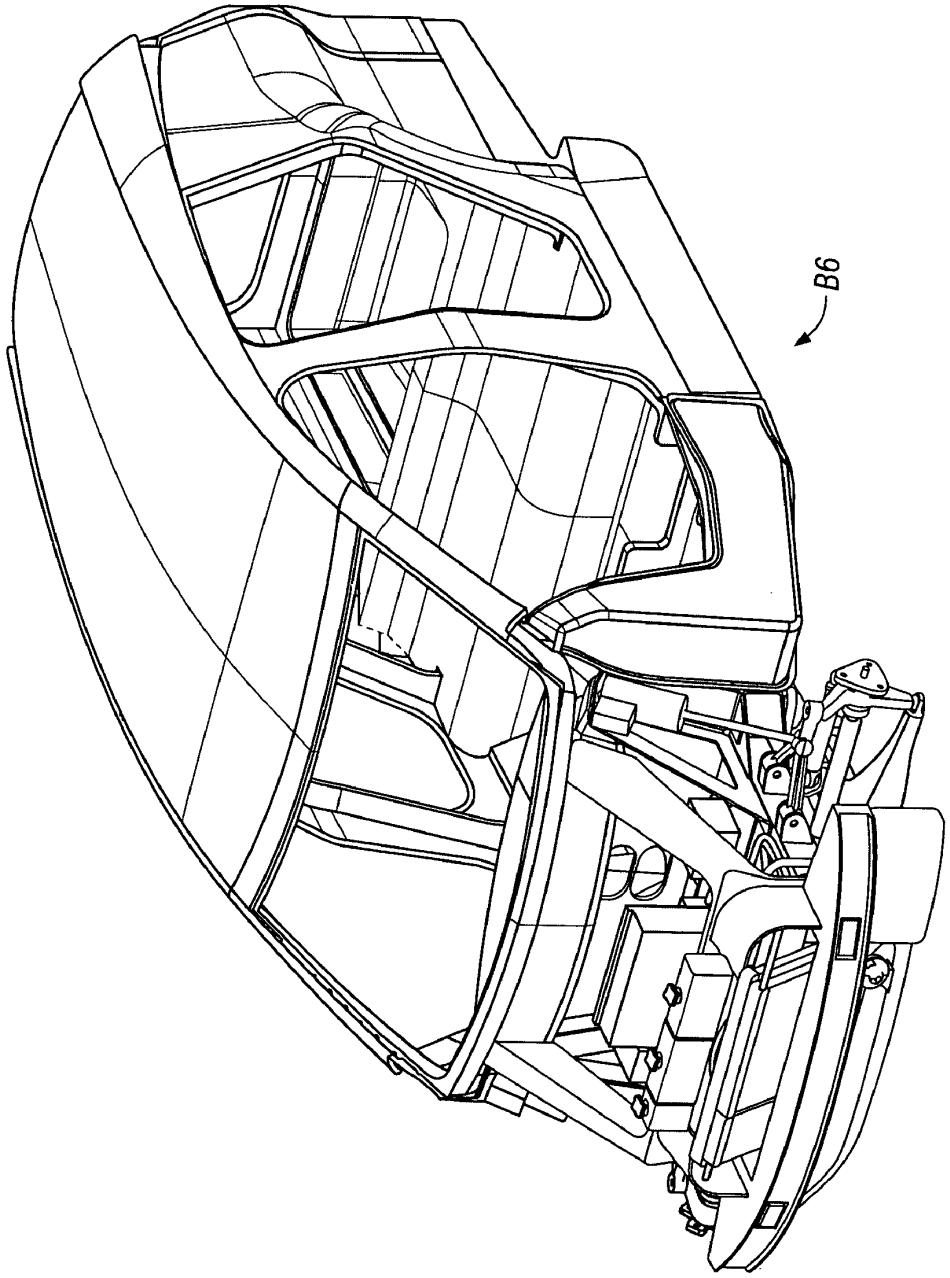

FIG. 4N

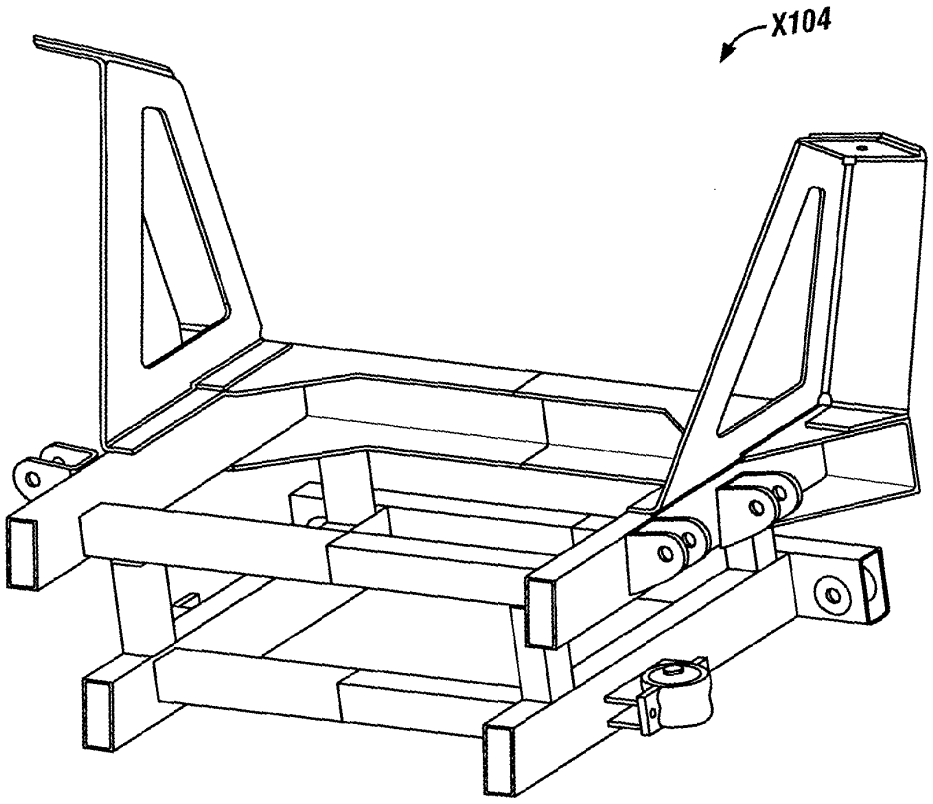

FIG. 5

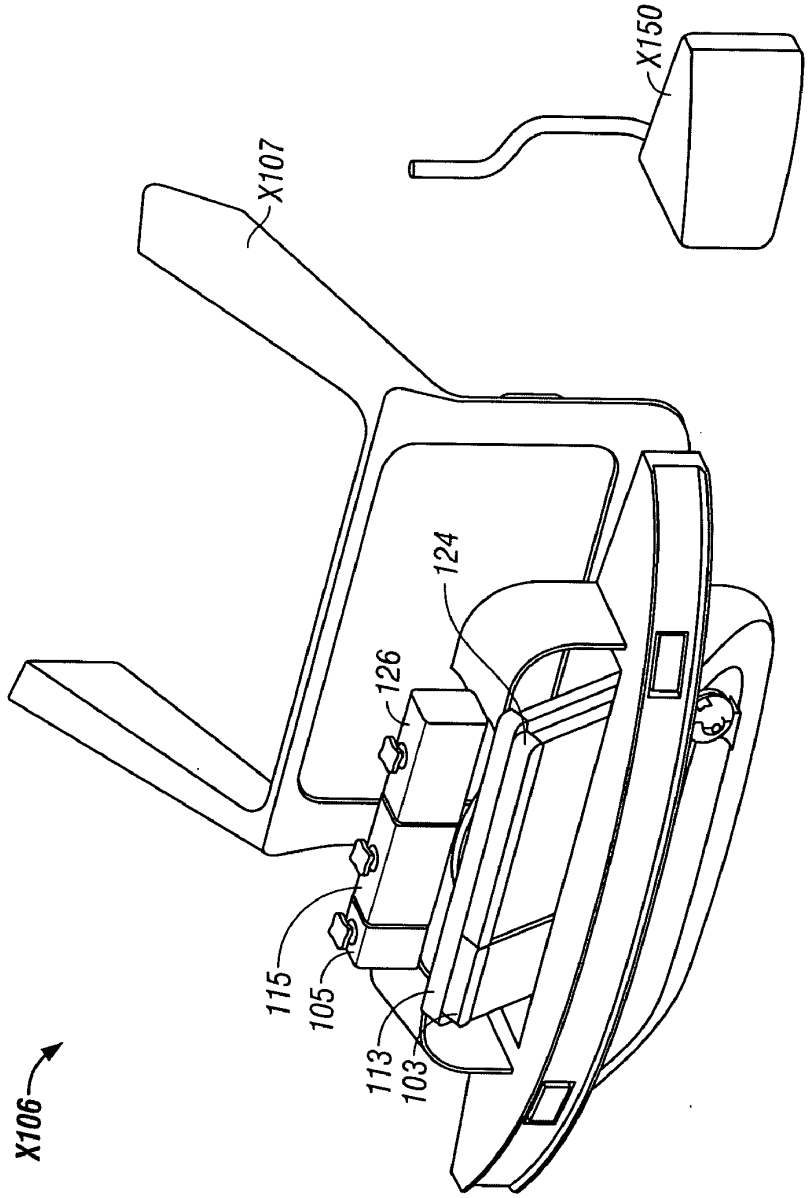

FIG. 6

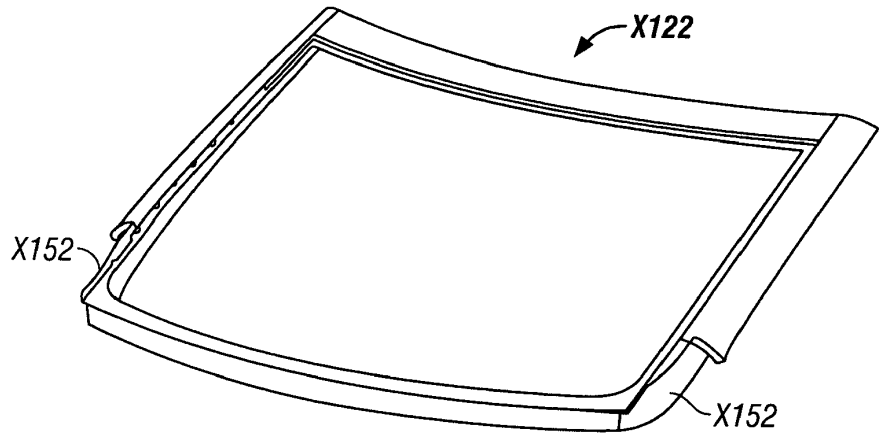

FIG. 7

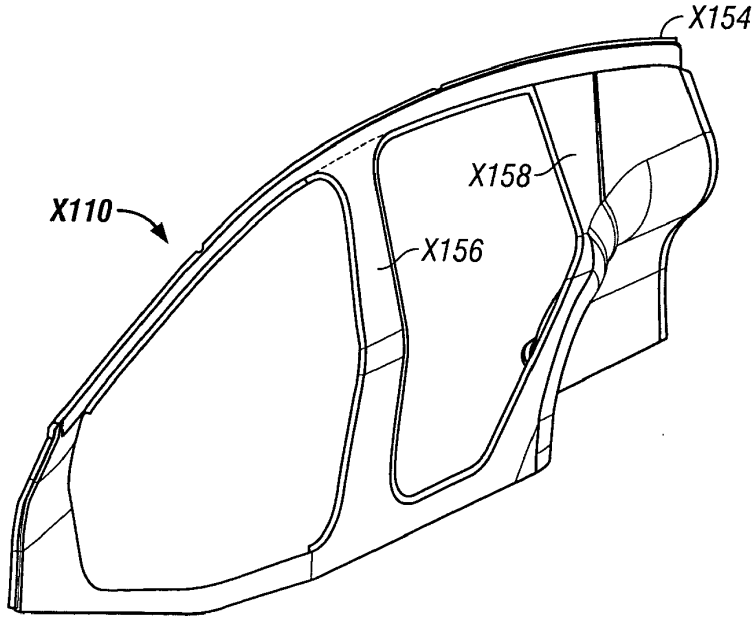

FIG. 8A

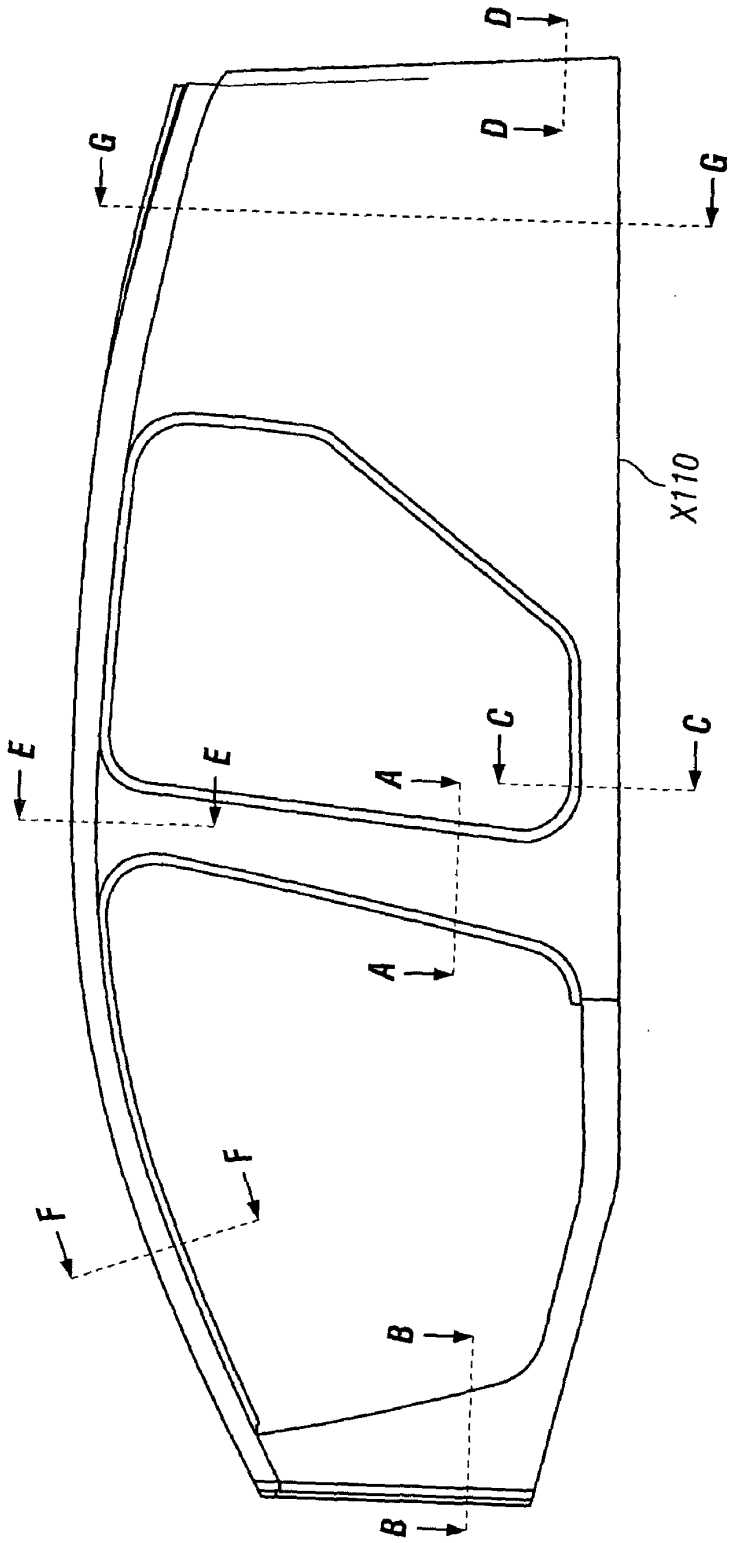

FIG. 8B

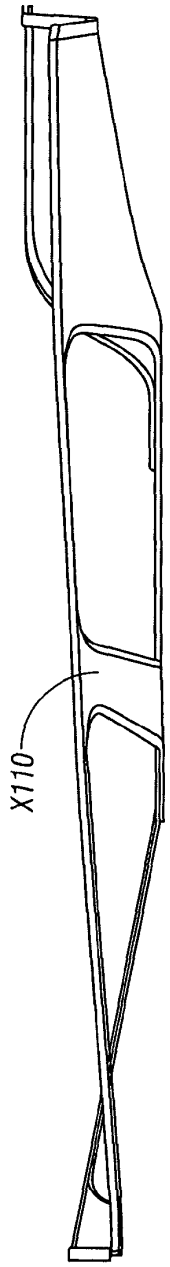

FIG. 8C

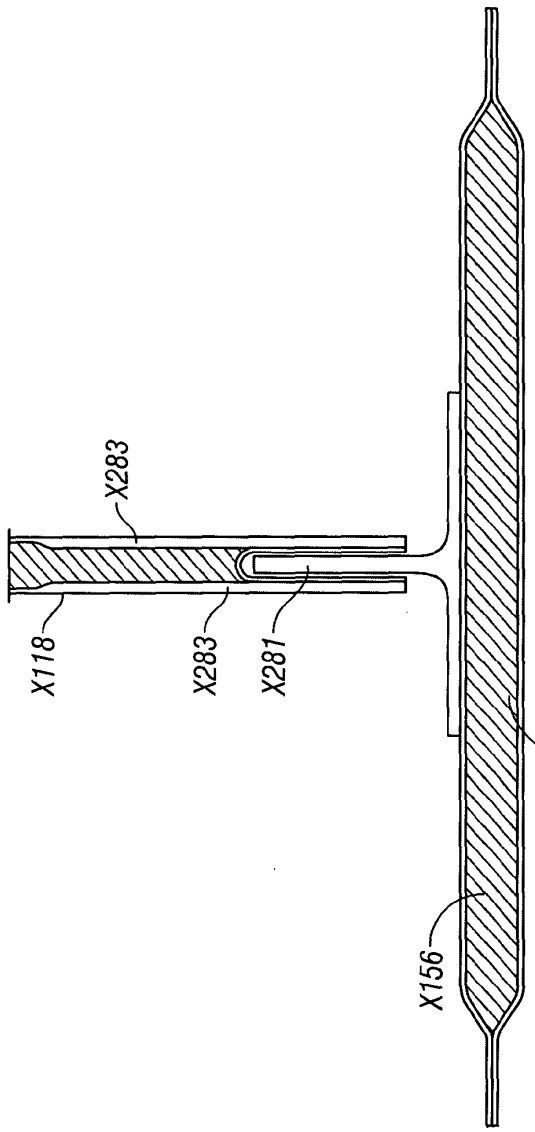

SECTION A-A

FIG. 8D

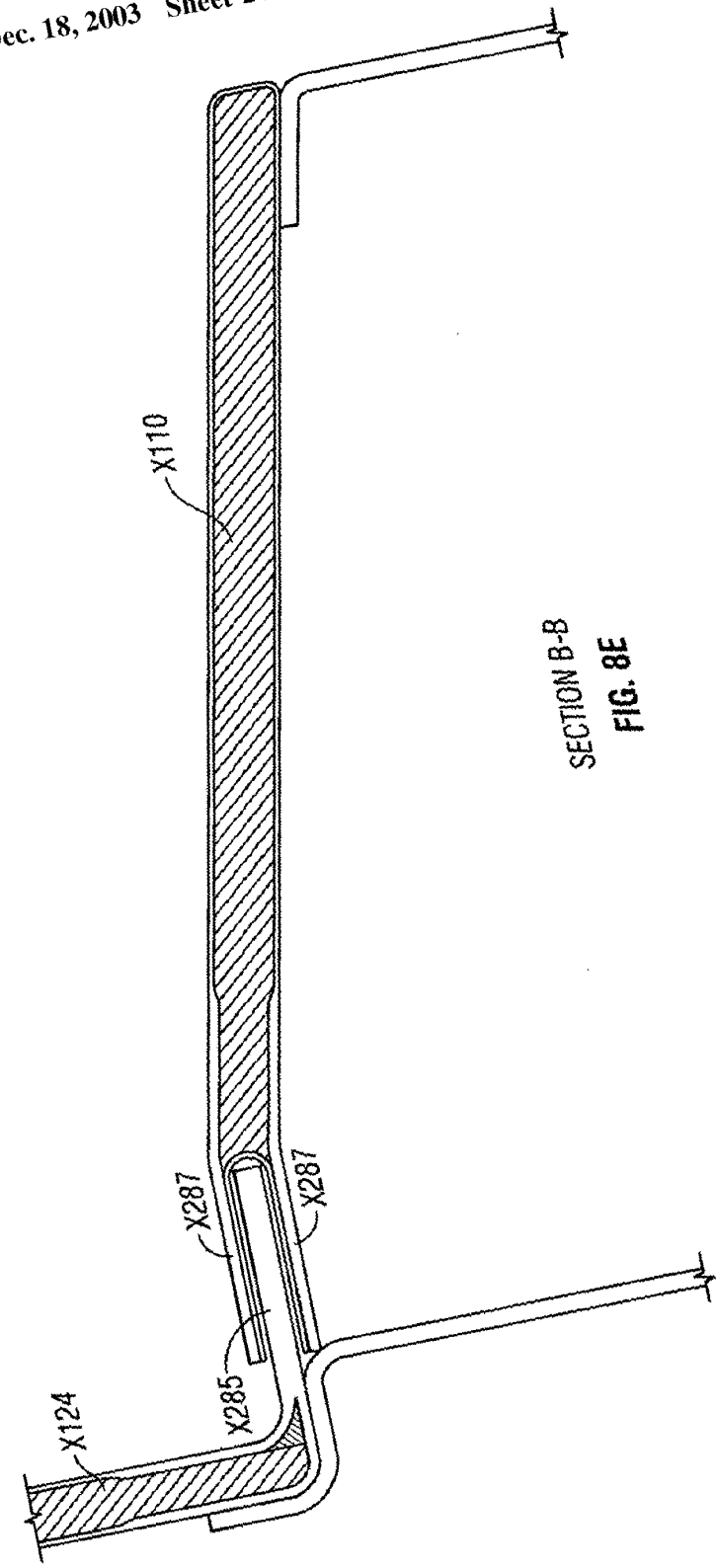

SECTION B-B
FIG. 8E

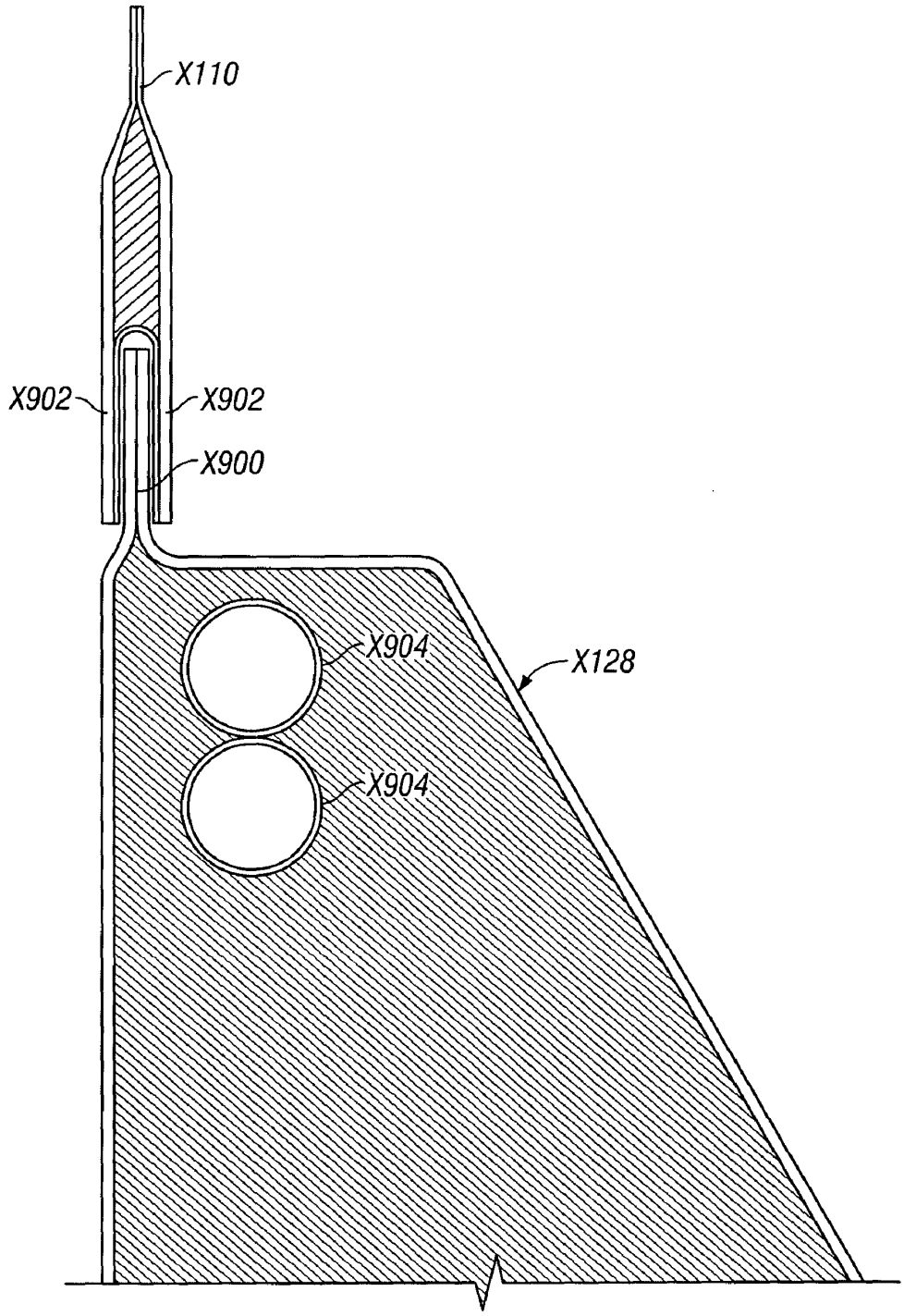

FIG. 8F

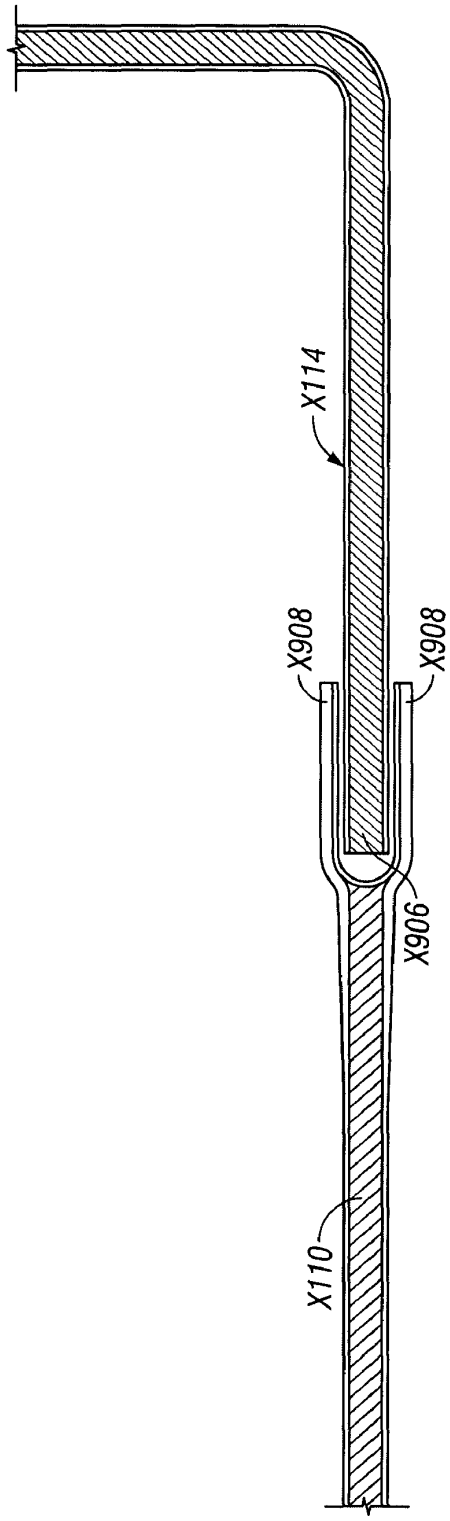

SECTION D-D
FIG. 8G

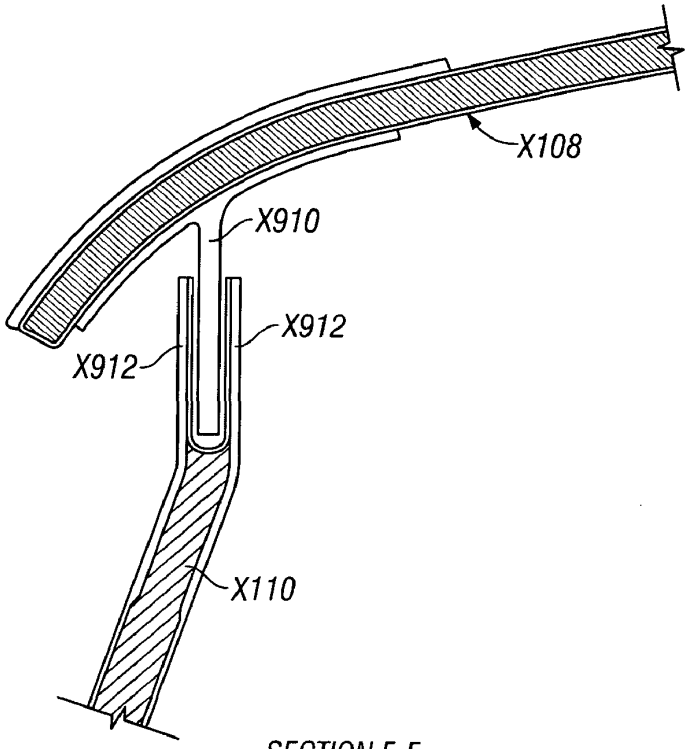

SECTION E-E

FIG. 8H

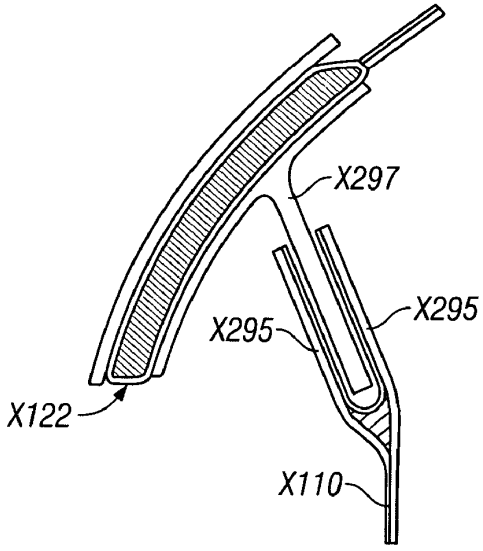

SECTION F-F

FIG. 8I

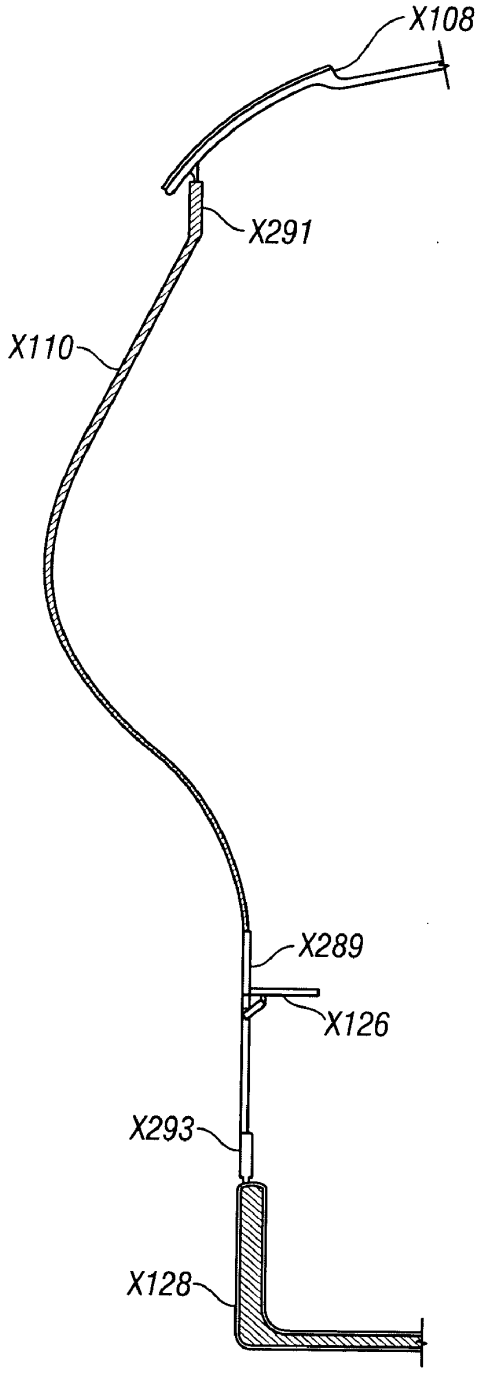

SECTION G-G

FIG. 8J

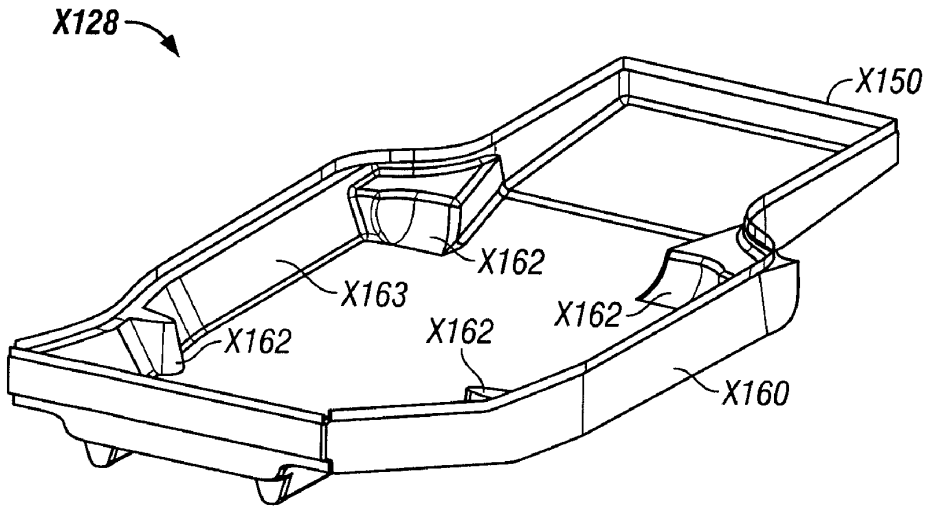

FIG. 9

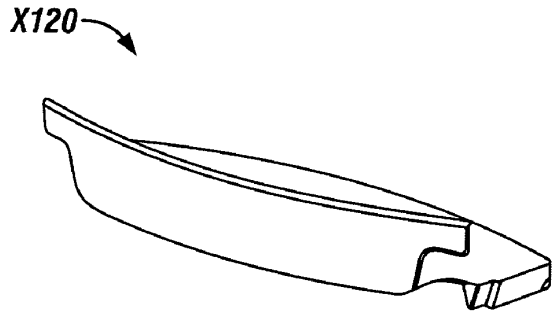

FIG. 10

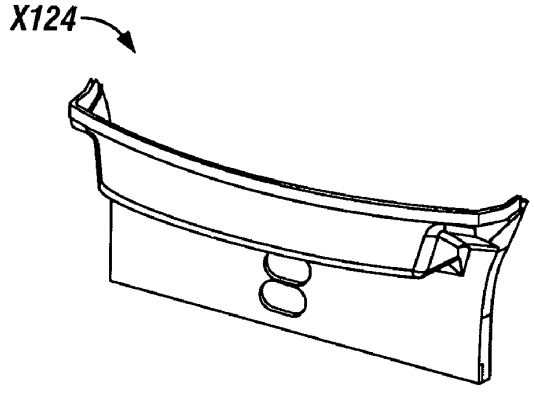

FIG. 11A

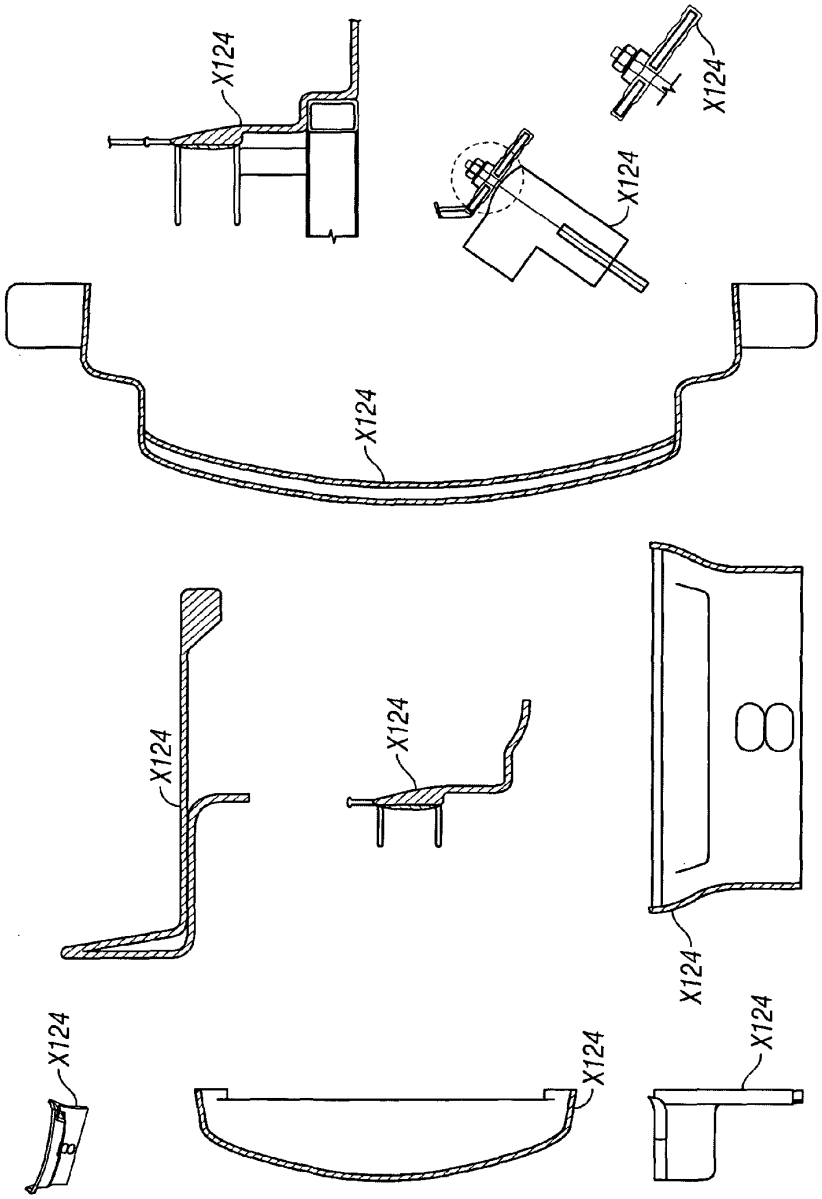

FIG. 11B

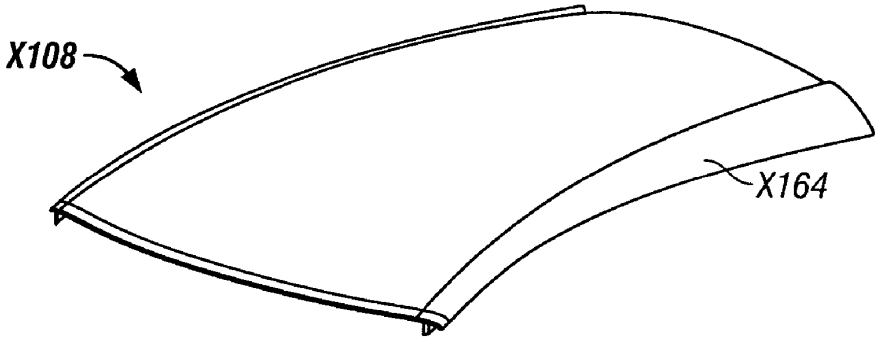

FIG. 12

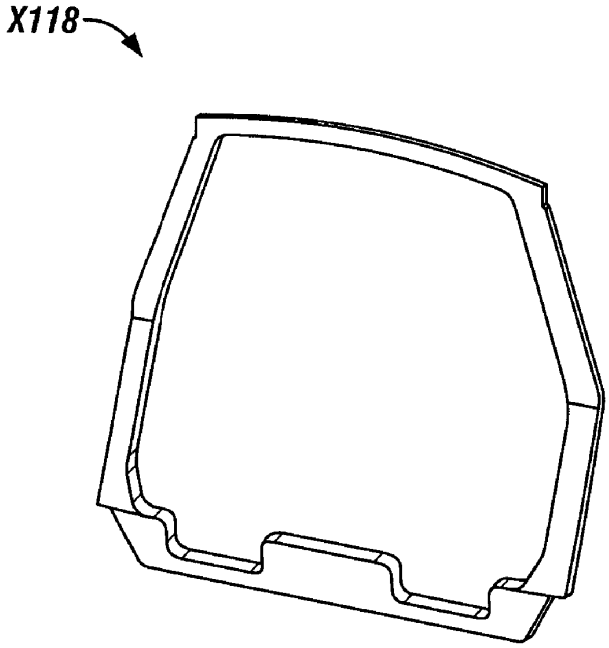

FIG. 13

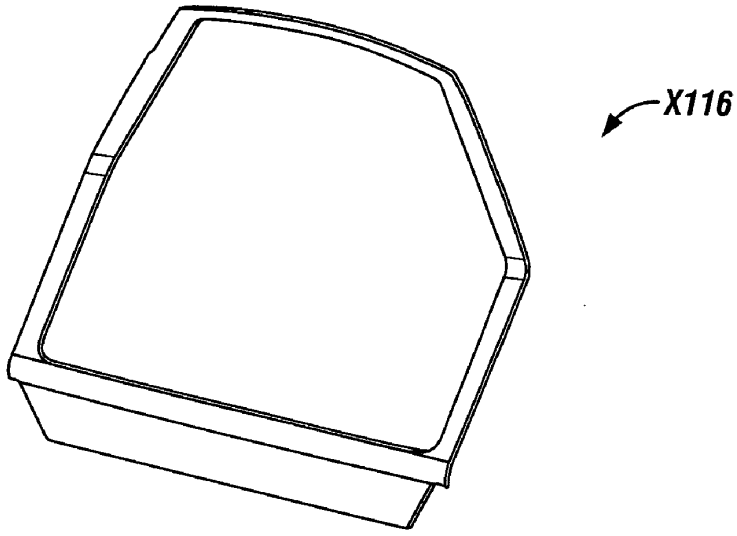

FIG. 14

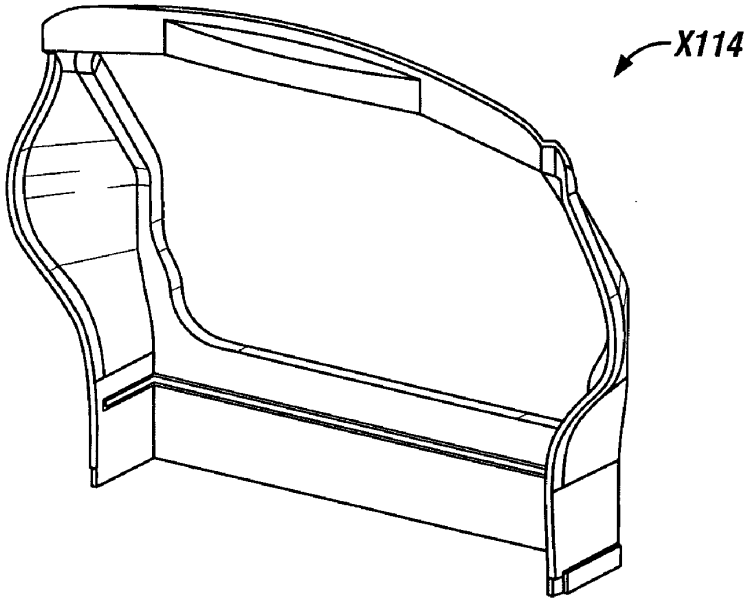

FIG. 15

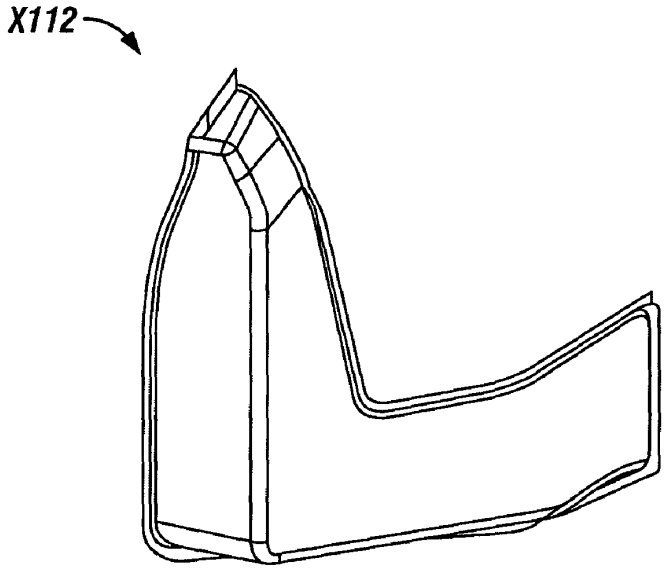

FIG. 16

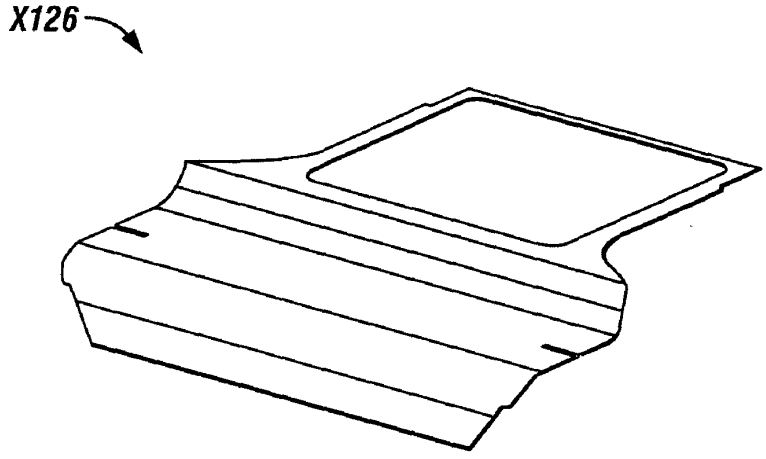

FIG. 17

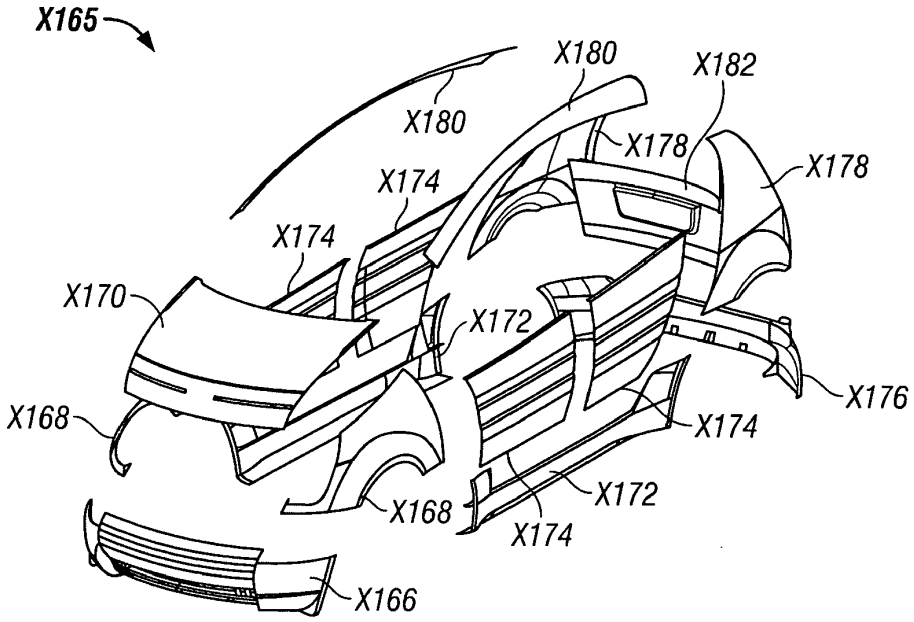
X165
X180
X180
X182
X178
X178
X174
X174
X170
X172
X176
X168
X174
X168
X172
X174
X166

FIG. 18

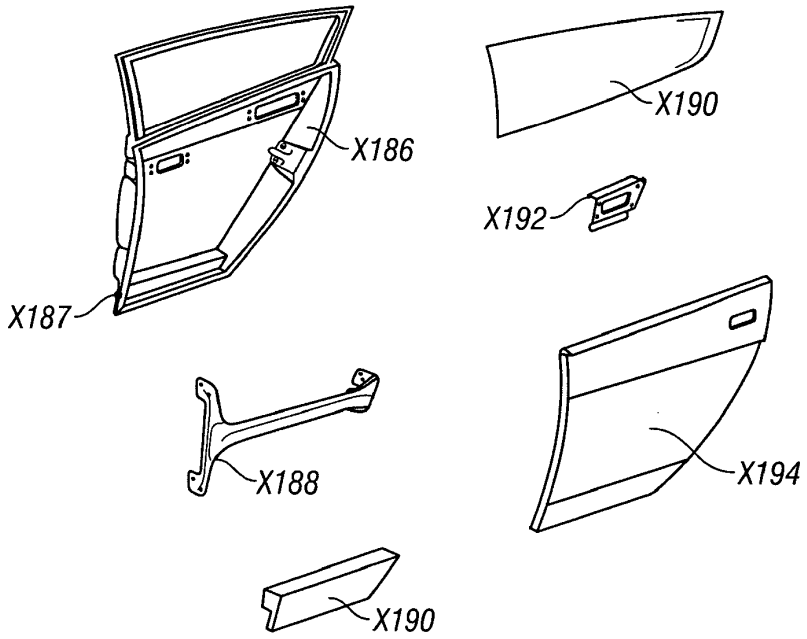
X186
X190
X192
X187
X188
X194
X190

FIG. 19

Design Feature	PRESENT INVENTION	Conventional Approach
Number of Major Components	14	>40
Total Number of Components	62	>270
Floor	• Integral Cooling and Conduits • Integral Crash Load Path Management • Forms Basis of Family of Variants	• Several Major Progressive Stampings with Numerous Local Reinforcements or Tailored Blanks • Additional Longitudinals and Cross Members for Stiffness • Multi-Step Galvanic Protection Dips
Assembly	Bonded, No Fasteners, Self-Fixturing	Spot and MiG Welded, Fastened, Fixtured
Component Fabrication	Automated Preforms, Net Shape Liquid Infusion	Blanks, Stamped, Trimmed to Net, and Welded Sub-Assemblies
External Skin	Damage Resistant, Thermoplastic Panels	Bolt-on High Damage Risk and Corrosion Susceptible Steel Panels
External Finish	Non-Painted, Through Thickness Color, Matt Finish	Galvanized, Painted, and Clear Coated, Class A Finish, Underbody Protective Coatings
Closures	Structural Inner, Integral Intrusion Beam and Hardware Cassette, Thermoplastic Outer	Pressed Steel Inner, Pressed Outer Clinched to Inner, Constrained Assembly Access
Carbon Composite Safety Cell (kg)	79.6	NA
Structural Mass (kg)	136.9	290
Total Body Mass (kg)	186.3	330

FIG. 20

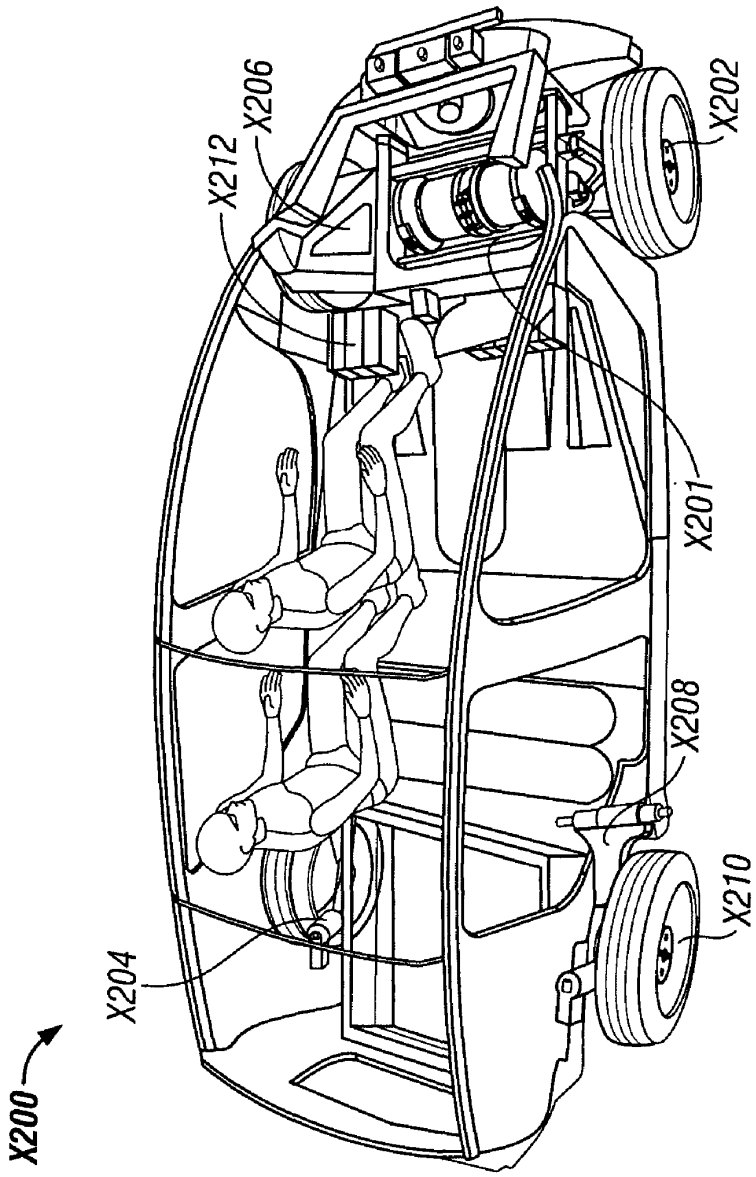

FIG. 21

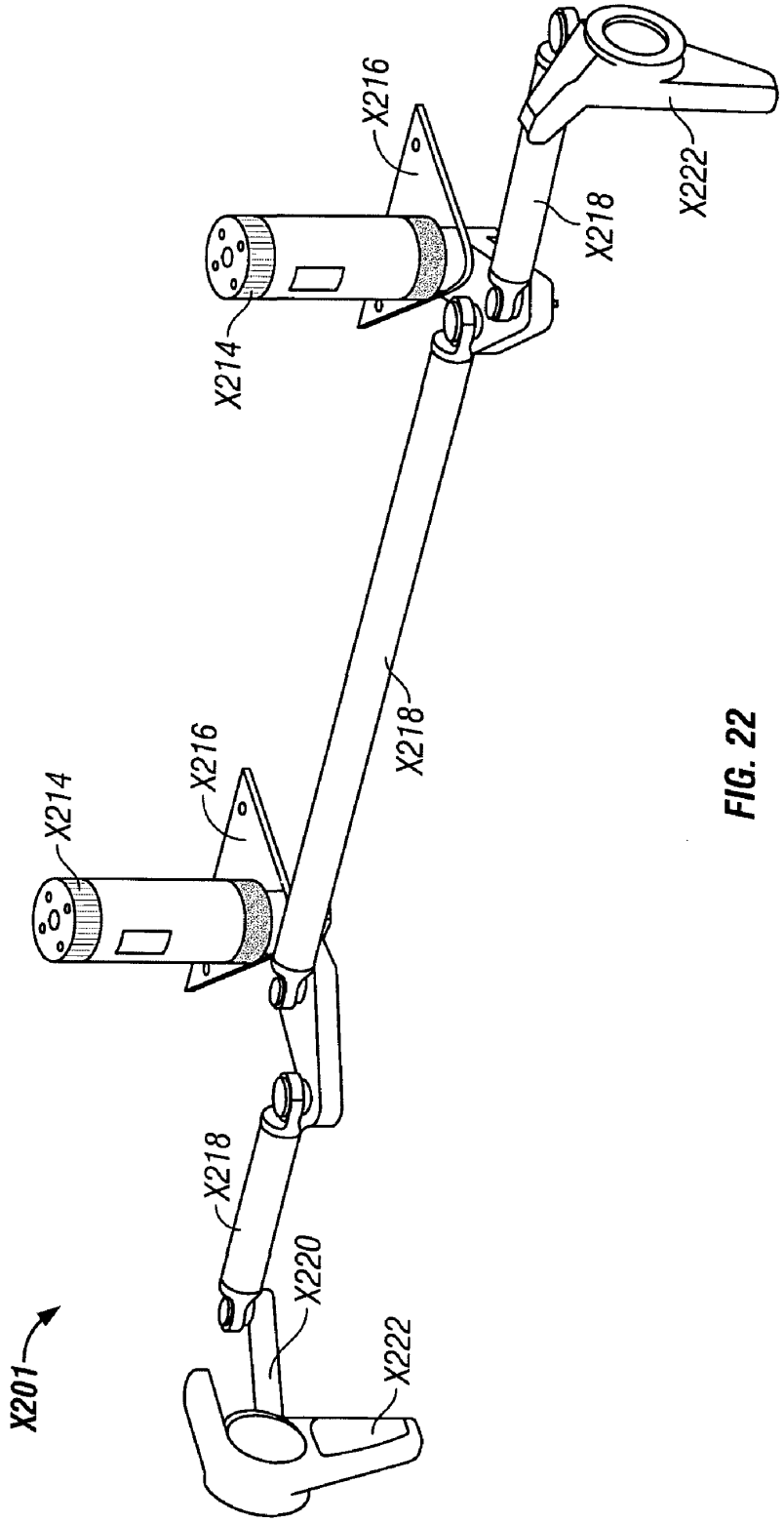

FIG. 22

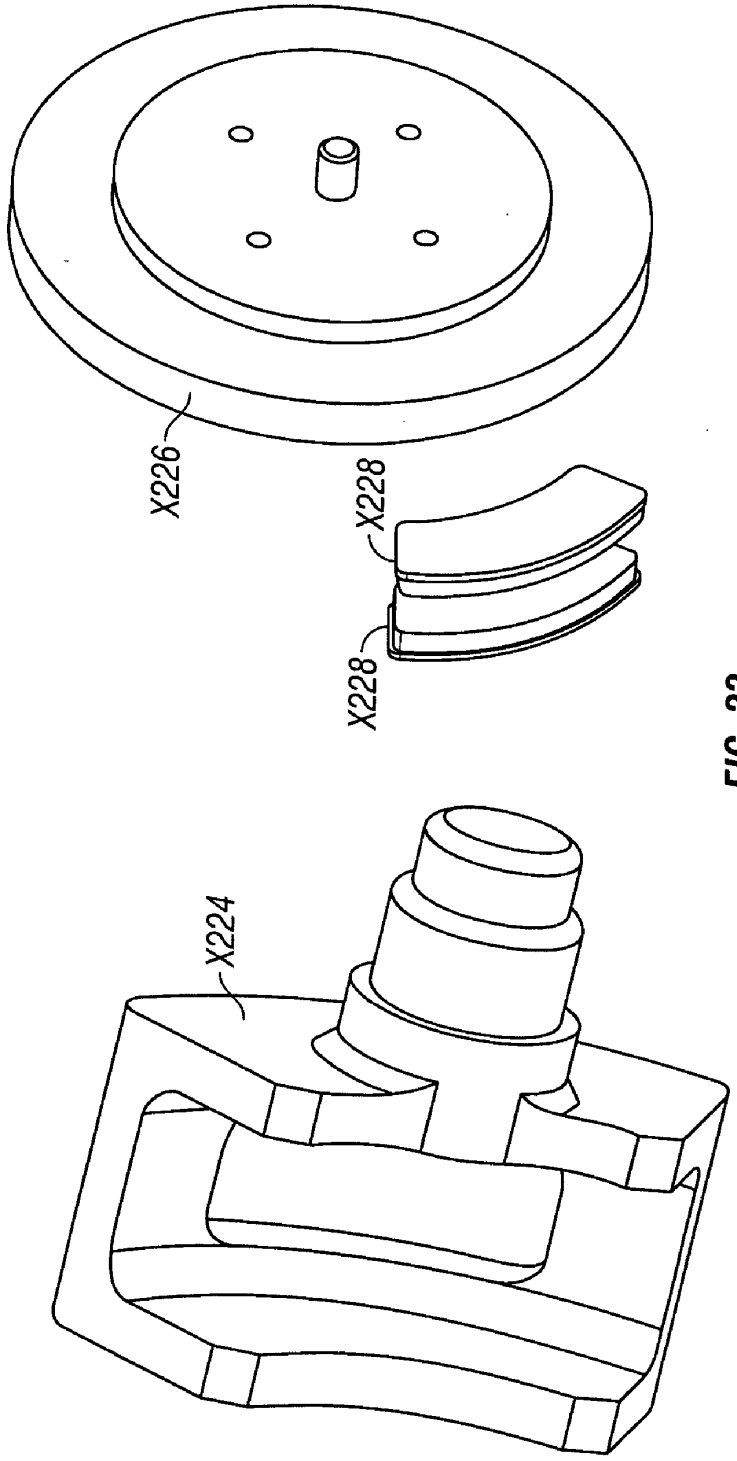

FIG. 23

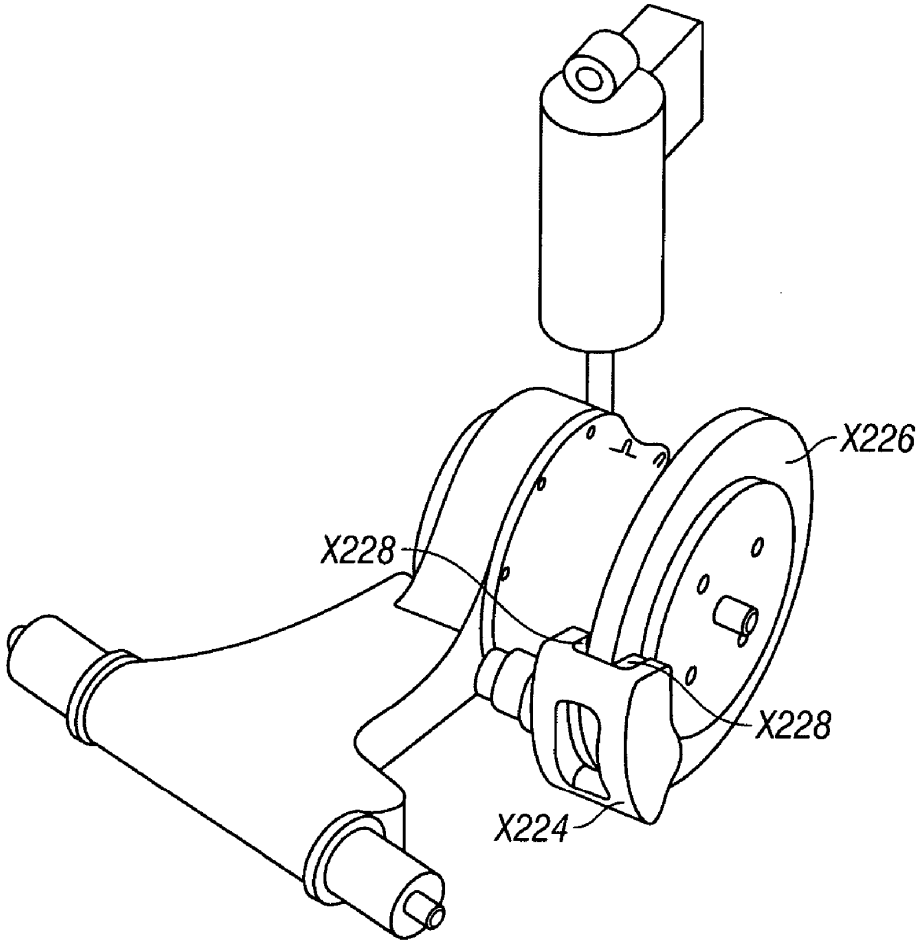

FIG. 24

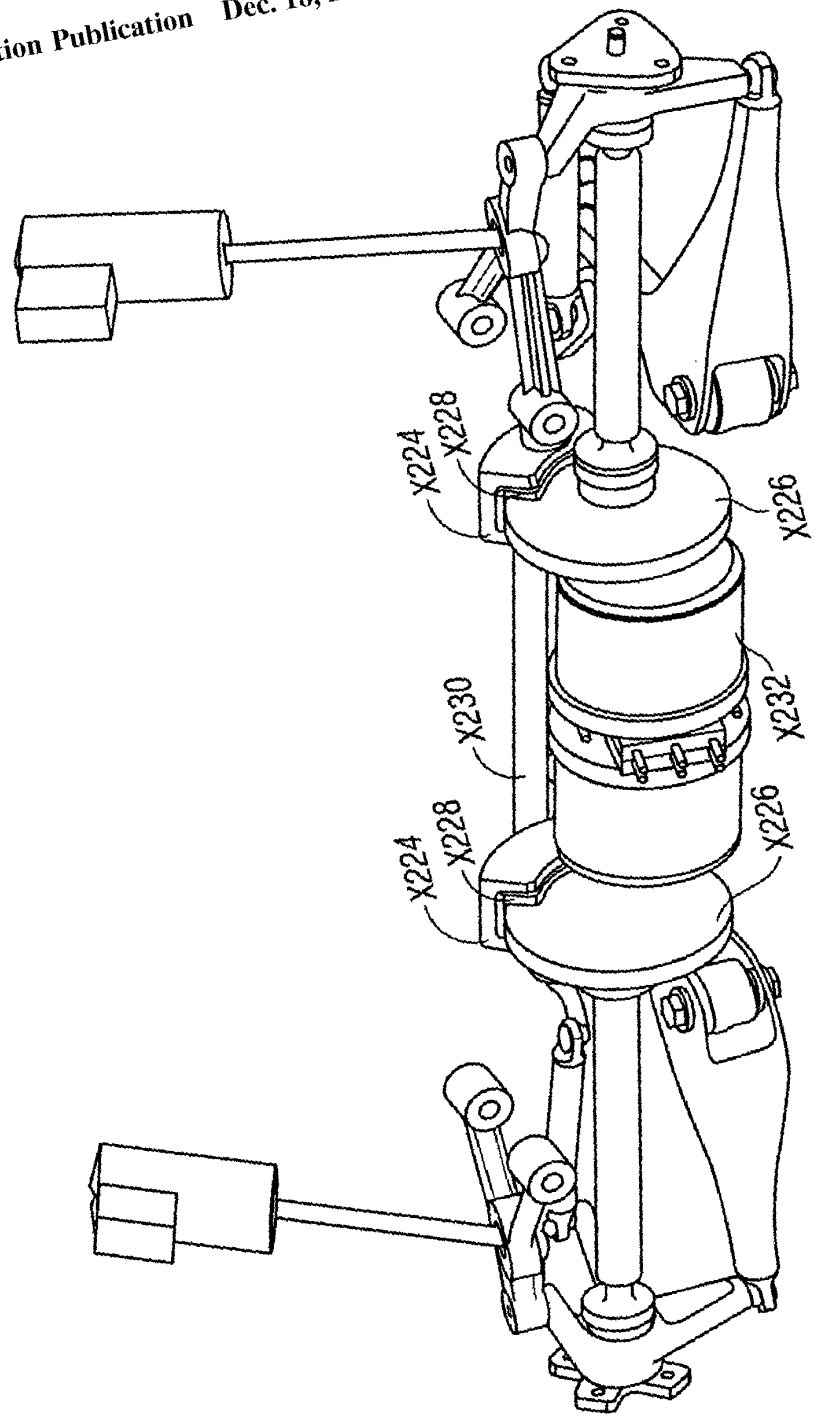

FIG. 25

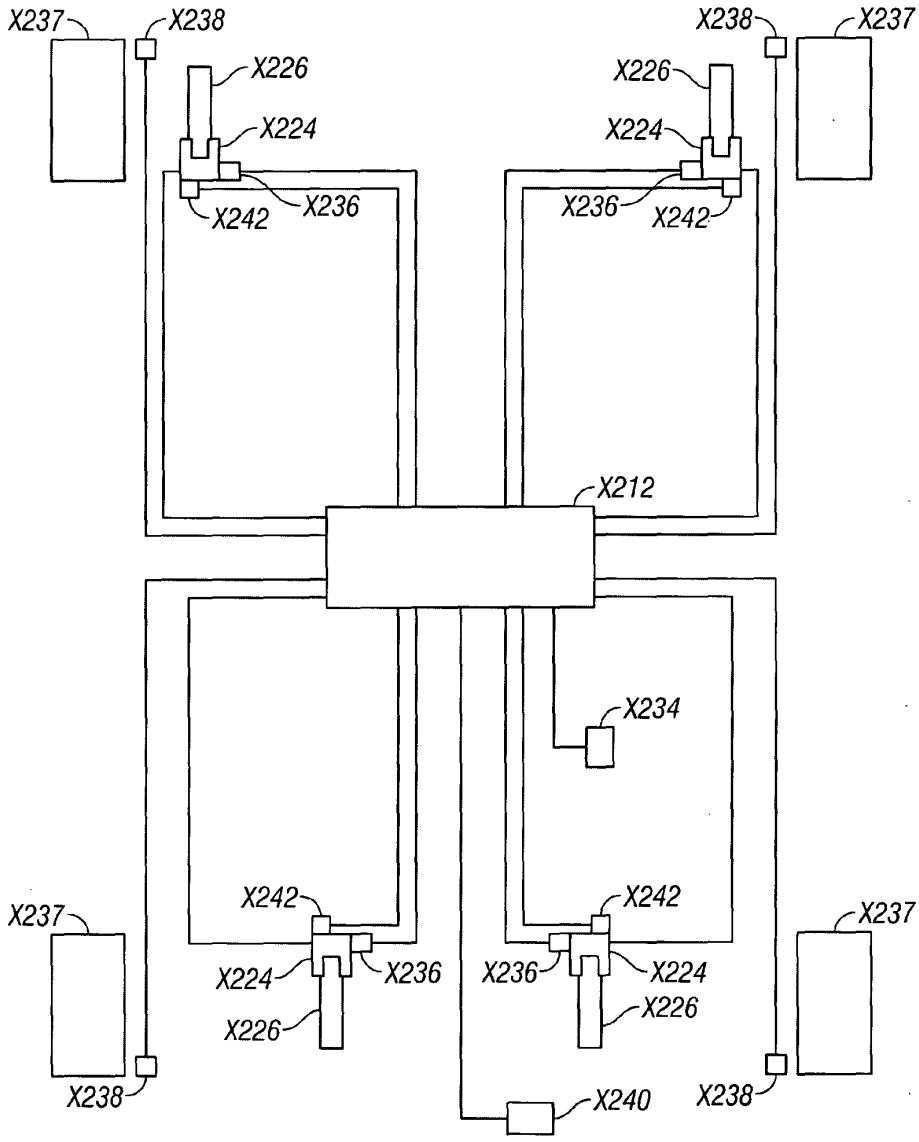
X237
X238
X226
X224
X242
X236
X238
X237
X226
X224
X236
X242
X212
X234
X237
X242
X224
X236
X226
X242
X236
X224
X226
X237
X238
X240
X238

FIG. 26

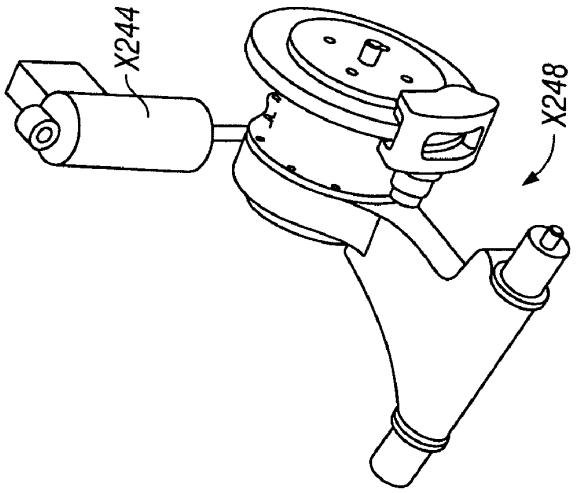

FIG. 27B

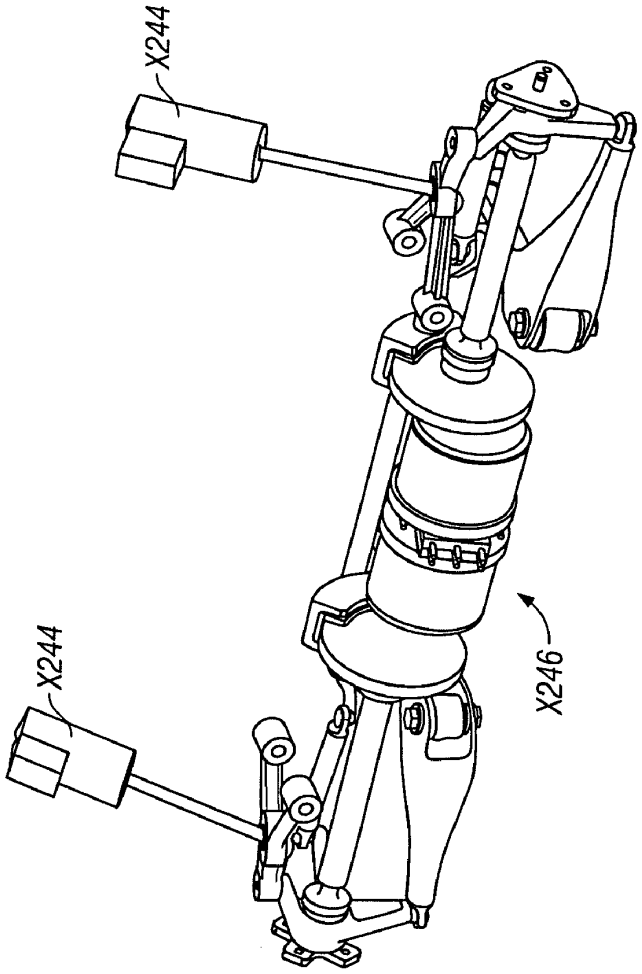

FIG. 27A

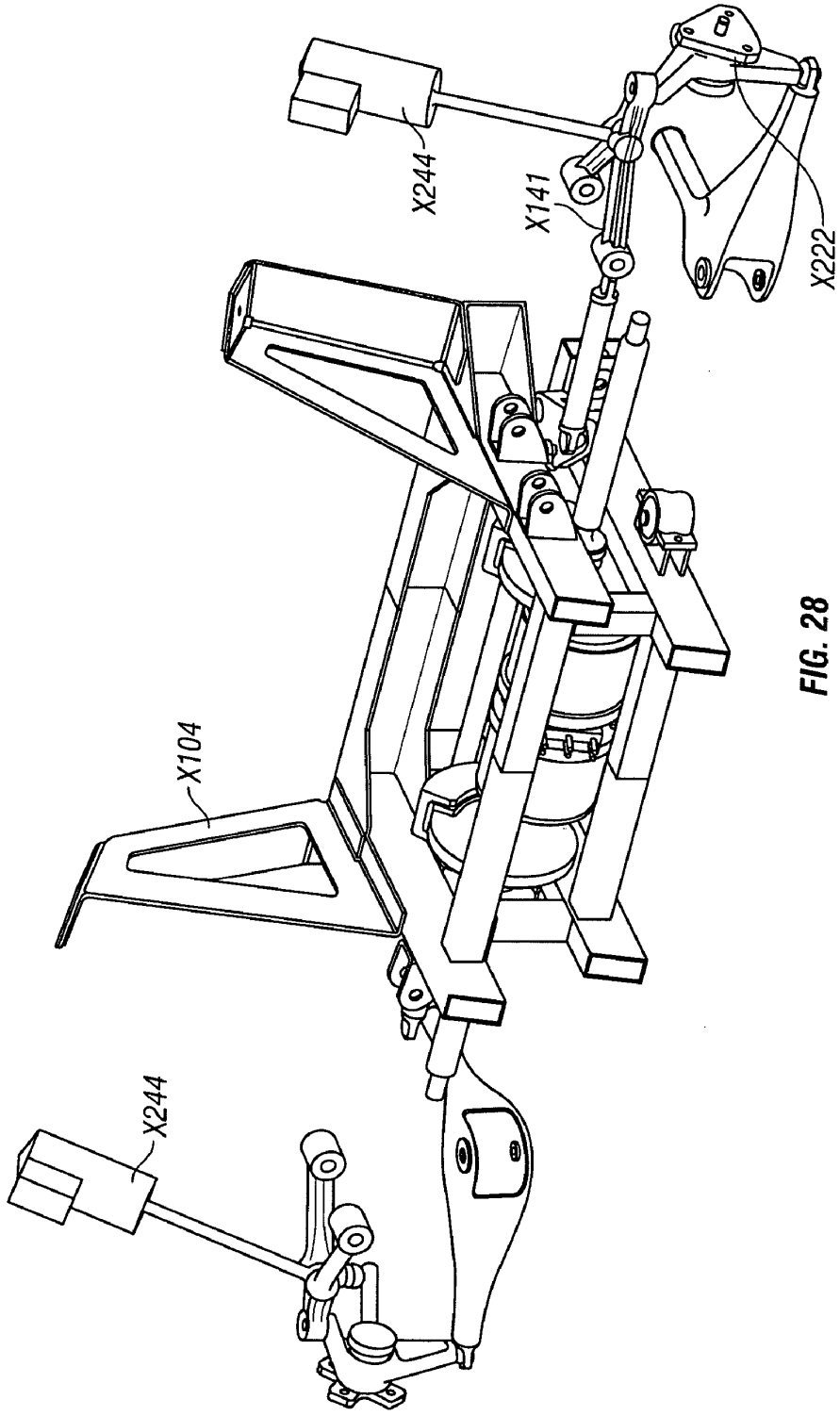

FIG. 28

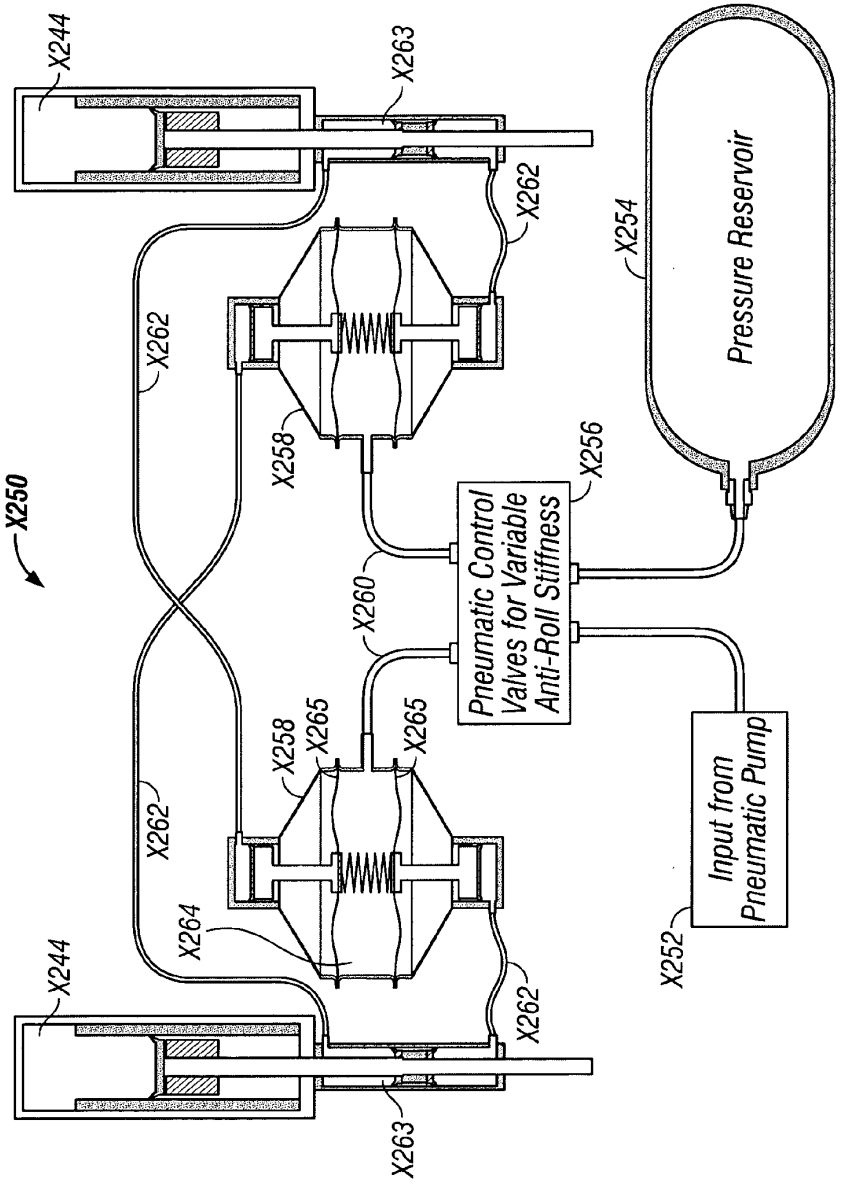
X250
X244
X263
X262
X254
Pressure Reservoir
X258
X256
Pneumatic Control Valves for Variable Anti-Roll Stiffness
X260
X265
X264
Input from Pneumatic Pump
X252

FIG. 29

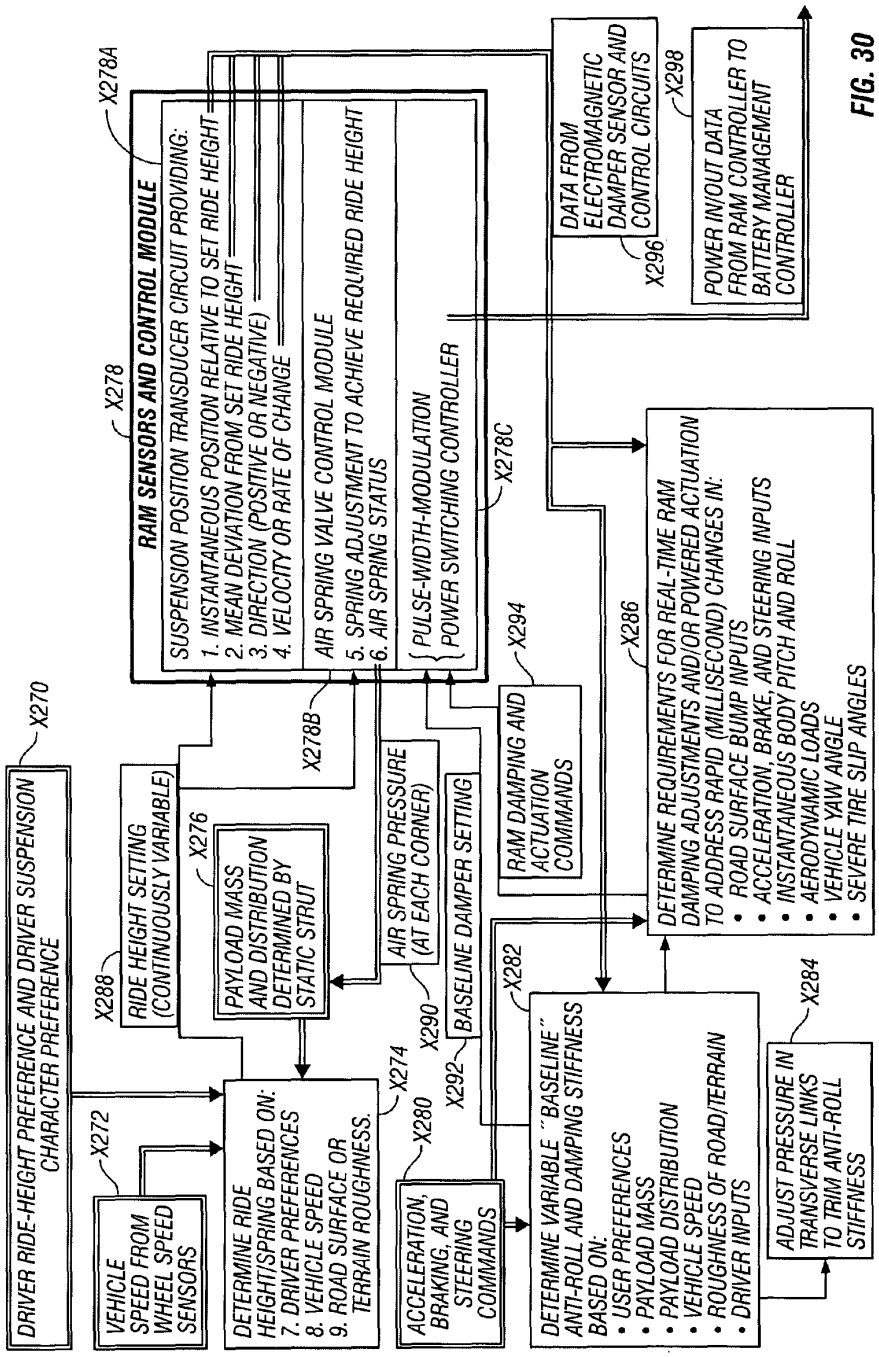
X278A
RAM SENSORS AND CONTROL MODULE
SUSPENSION POSITION TRANSDUCER CIRCUIT PROVIDING:
1. INSTANTANEOUS POSITION RELATIVE TO SET RIDE HEIGHT
2. MEAN DEVIATION FROM SET RIDE HEIGHT
3. DIRECTION (POSITIVE OR NEGATIVE)
4. VELOCITY OR RATE OF CHANGE
AIR SPRING VALVE CONTROL MODULE
5. SPRING ADJUSTMENT TO ACHIEVE REQUIRED RIDE HEIGHT
6. AIR SPRING STATUS
PULSE-WIDTH-MODULATION
POWER SWITCHING CONTROLLER
X278
X278B
X278C
DATA FROM ELECTROMAGNETIC DAMPER SENSOR AND CONTROL CIRCUITS
X296
X298
POWER IN/OUT DATA FROM RAM CONTROLLER TO BATTERY MANAGEMENT CONTROLLER
X270
DRIVER RIDE-HEIGHT PREFERENCE AND DRIVER SUSPENSION CHARACTER PREFERENCE
RIDE HEIGHT SETTING (CONTINUOUSLY VARIABLE)
X288
X276
PAYLOAD MASS AND DISTRIBUTION DETERMINED BY STATIC STRUT
AIR SPRING PRESSURE (AT EACH CORNER)
BASELINE DAMPER SETTING
X290
X292
X294
RAM DAMPING AND ACTUATION COMMANDS
X286
DETERMINE REQUIREMENTS FOR REAL-TIME RAM DAMPING ADJUSTMENTS AND/OR POWERED ACTUATION TO ADDRESS RAPID (MILLISECOND) CHANGES IN:
• ROAD SURFACE BUMP INPUTS
• ACCELERATION, BRAKE, AND STEERING INPUTS
• INSTANTANEOUS BODY PITCH AND ROLL
• AERODYNAMIC LOADS
• VEHICLE YAW ANGLE
• SEVERE TIRE SLIP ANGLES
X272
VEHICLE SPEED FROM WHEEL SPEED SENSORS
DETERMINE RIDE HEIGHT/SPRING BASED ON:
7. DRIVER PREFERENCES
8. VEHICLE SPEED
9. ROAD SURFACE OR TERRAIN ROUGHNESS.
X274
X280
ACCELERATION, BRAKING, AND STEERING COMMANDS
X282
DETERMINE VARIABLE "BASELINE" ANTI-ROLL AND DAMPING STIFFNESS BASED ON:
• USER PREFERENCES
• PAYLOAD MASS
• PAYLOAD DISTRIBUTION
• VEHICLE SPEED
• ROUGHNESS OF ROAD/TERRAIN
• DRIVER INPUTS
X284
ADJUST PRESSURE IN TRANSVERSE LINKS TO TRIM ANTI-ROLL STIFFNESS

FIG. 30

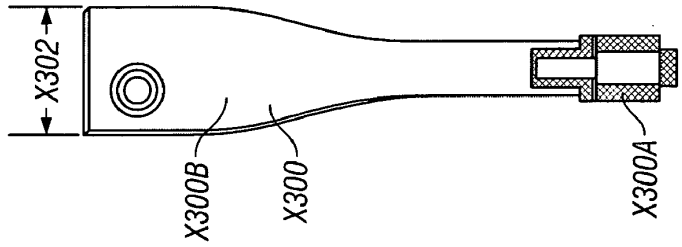

FIG. 31B

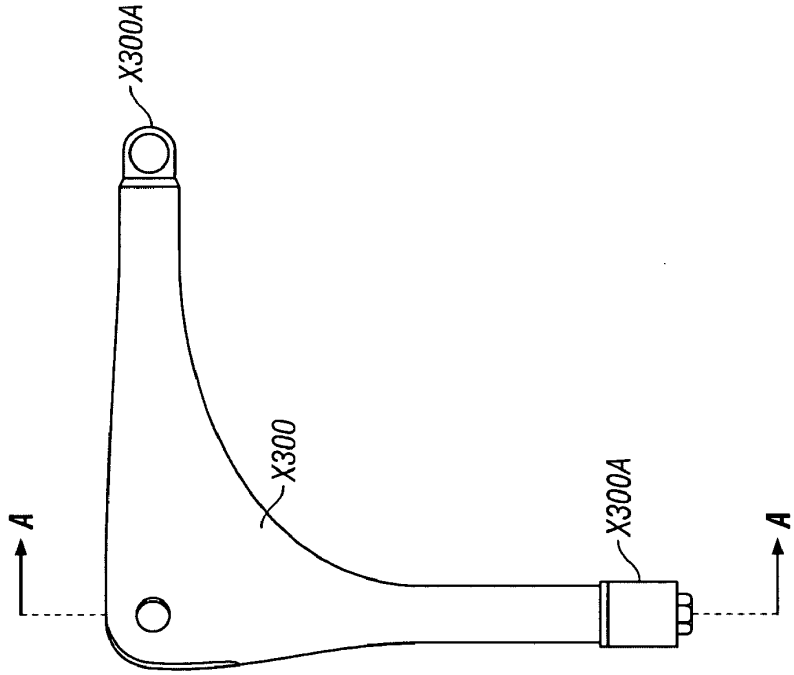

FIG. 31A

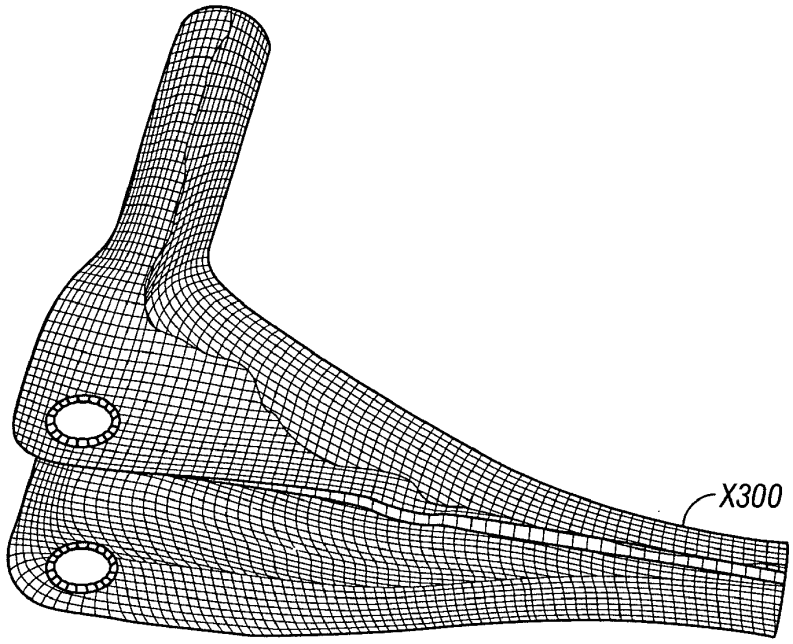

FIG. 32A

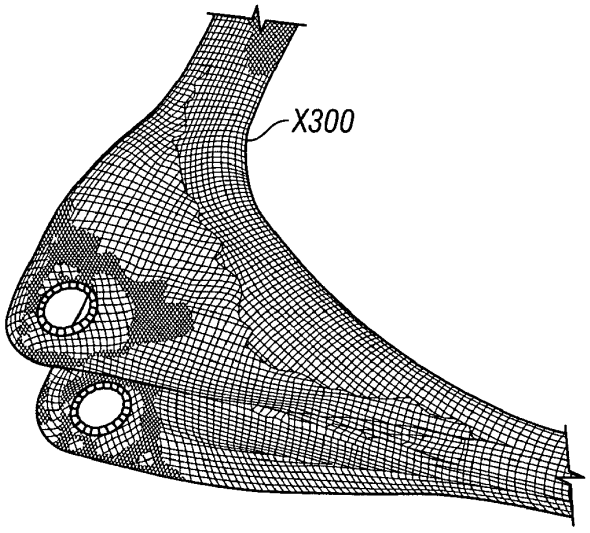

FIG. 32B

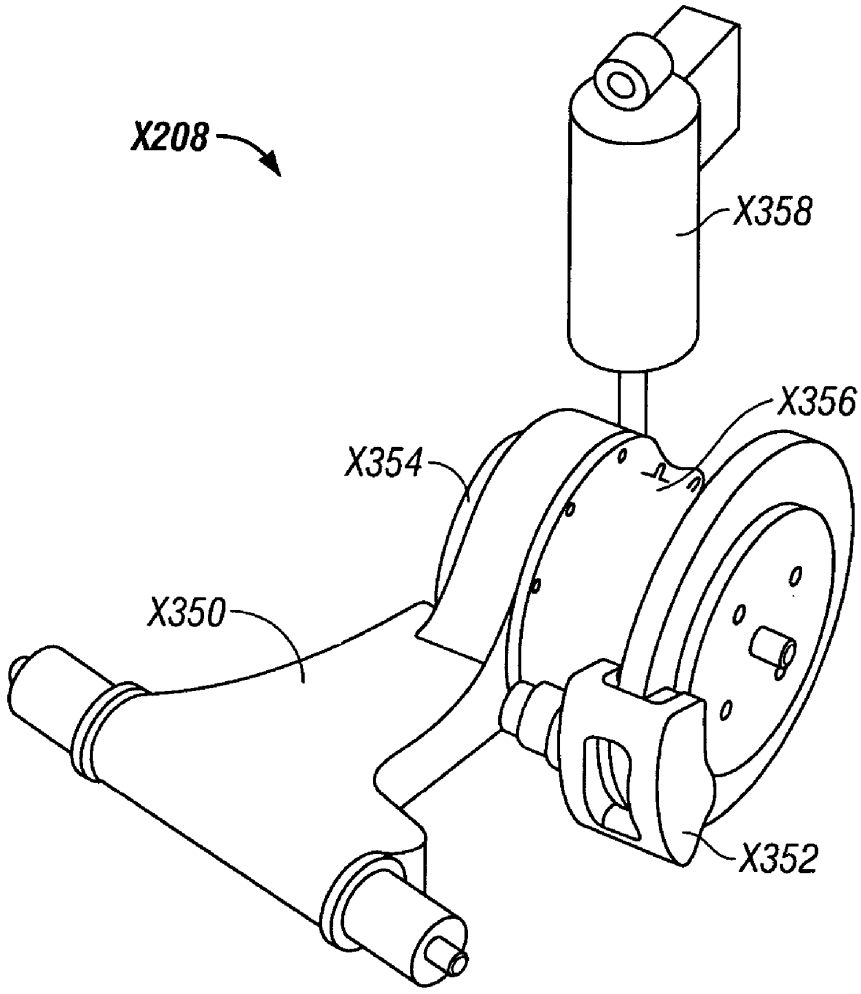

FIG. 33

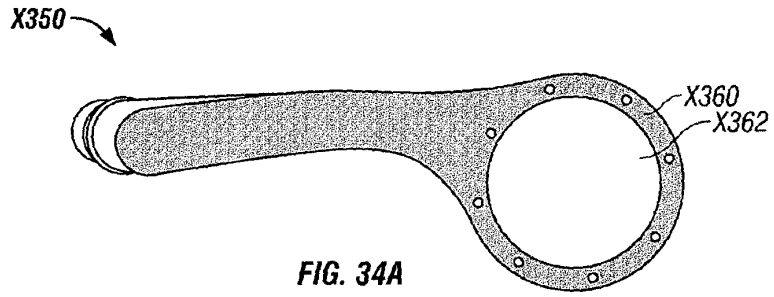

FIG. 34A

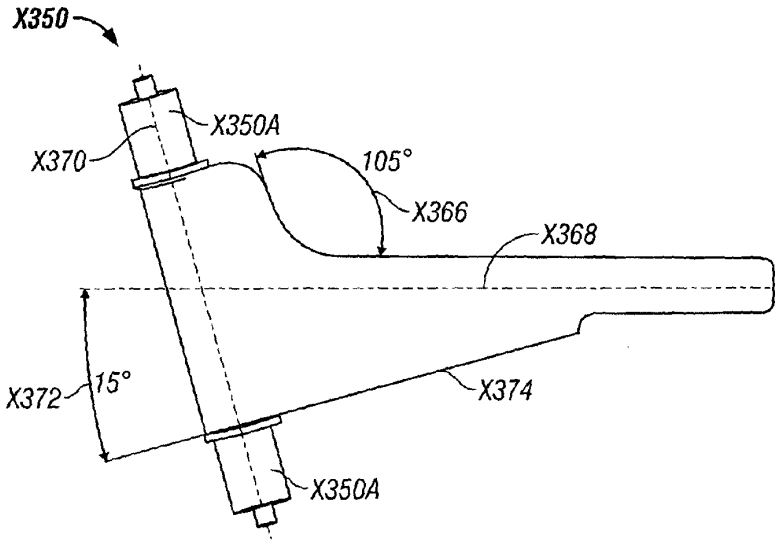

FIG. 34B

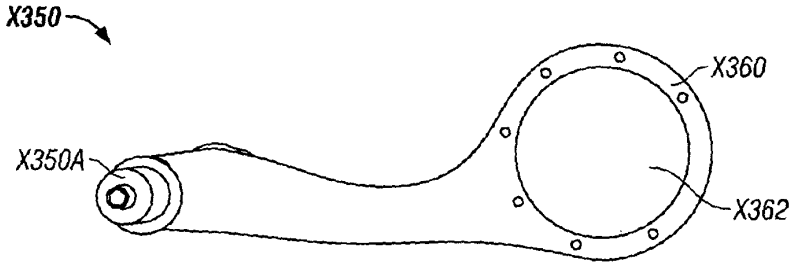

FIG. 34C

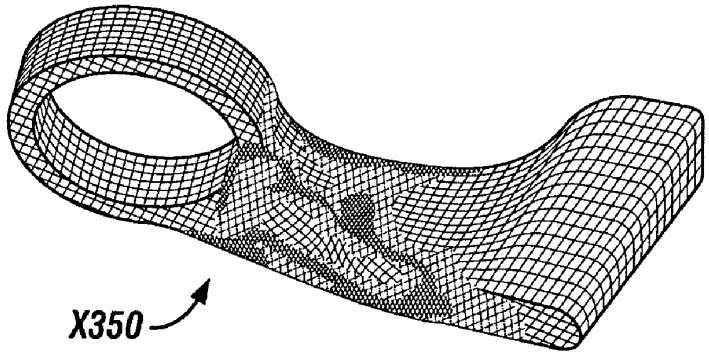

FIG. 35A

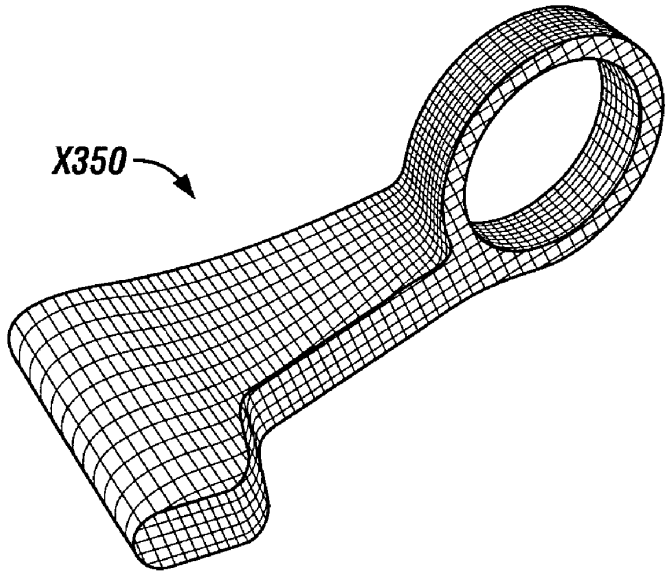

FIG. 35B

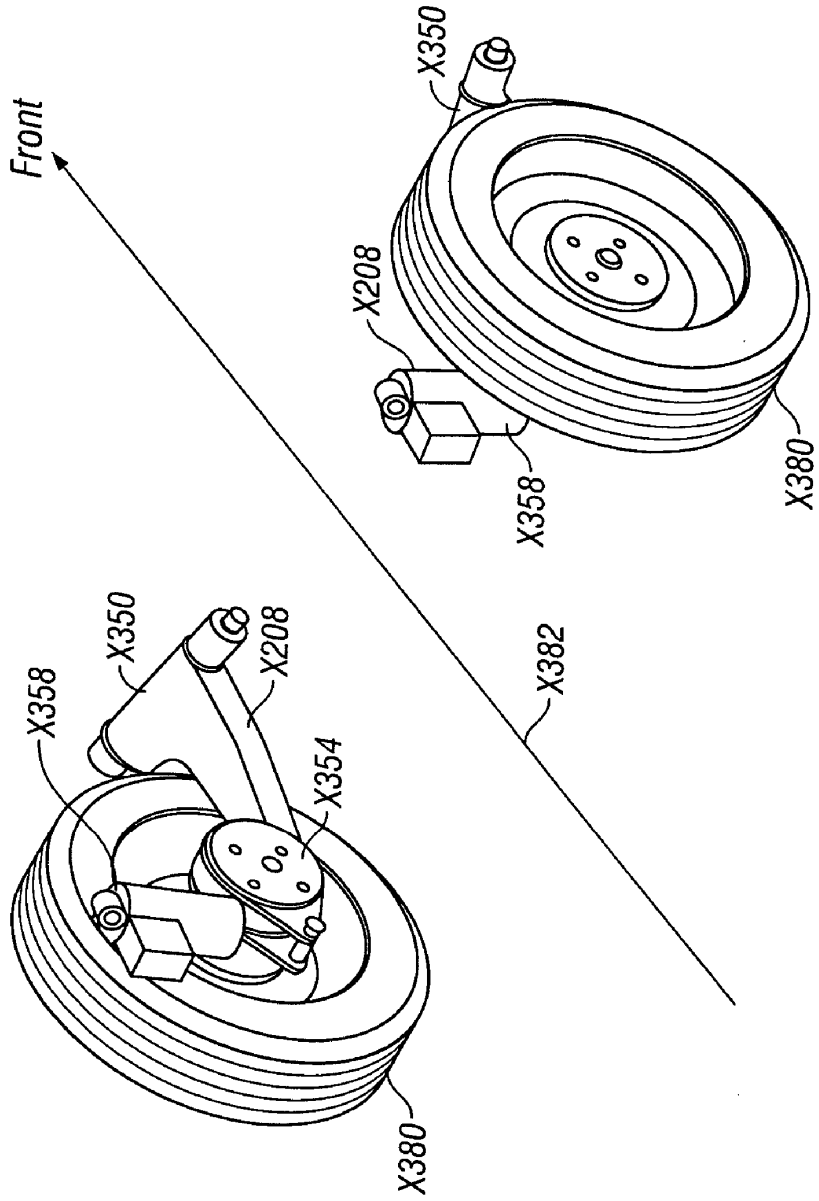

FIG. 36

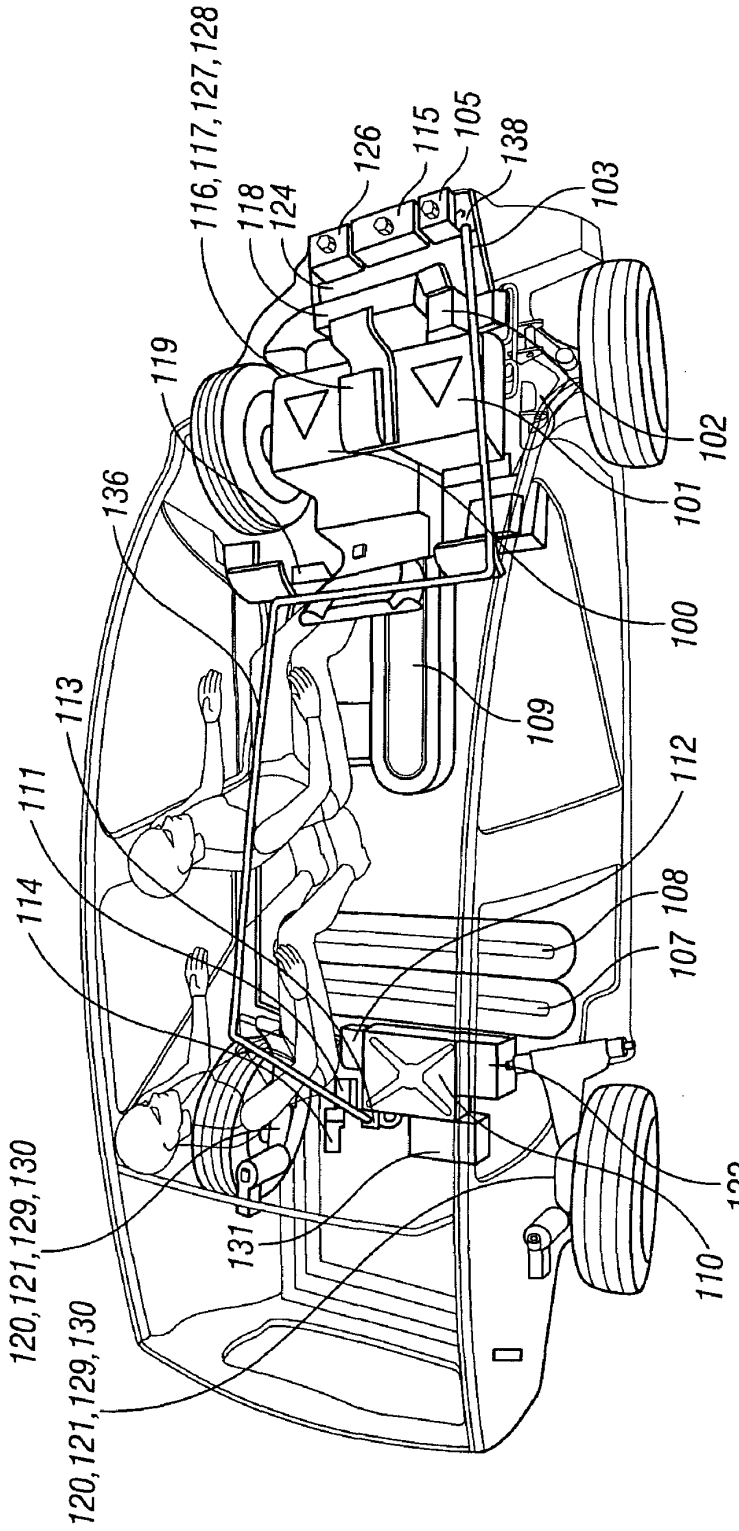
116,117,127,128
118
124
126
115
105
138
103
119
136
113
111
114
120,121,129,130
120,121,129,130
131
102
101
100
109
112
108
107
122
110

FIG. CR1

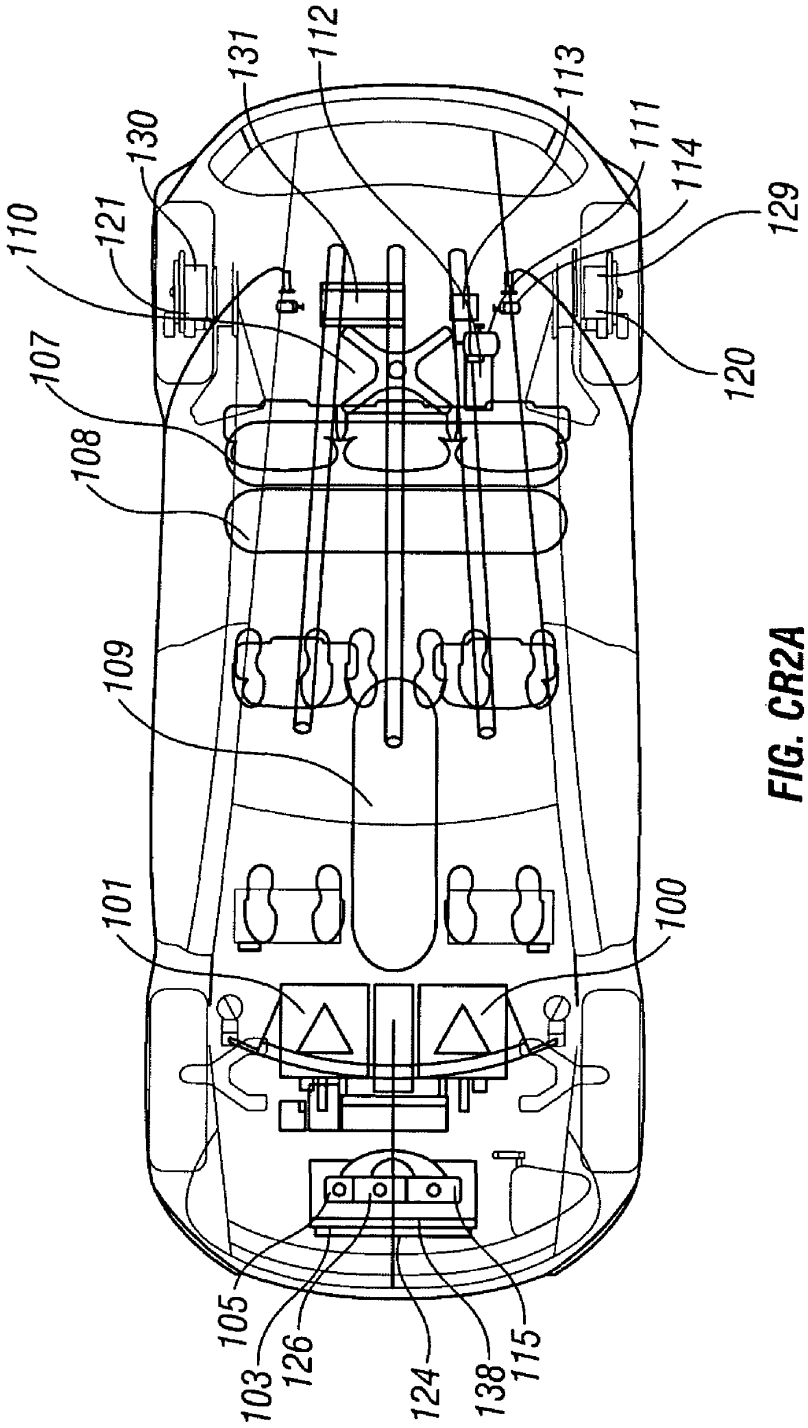
131
112
113
130
111
114
110
121
129
107
120
108
109
101
100
105
103
126
124
138
115

FIG. CR2A

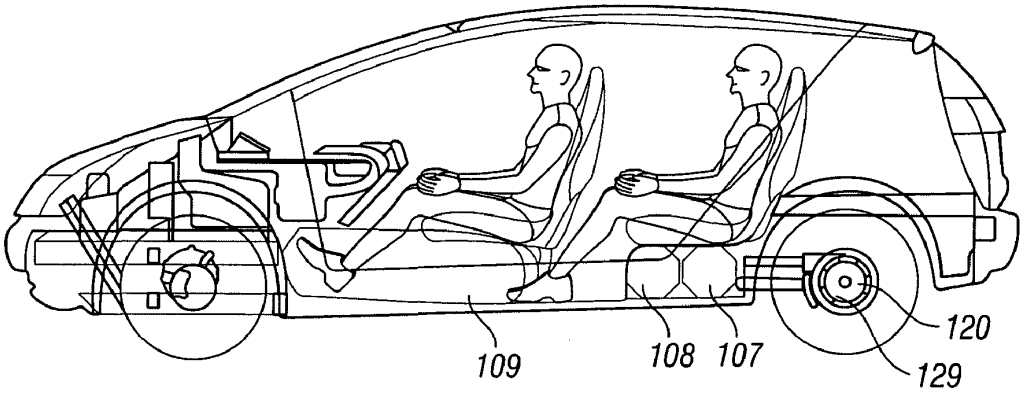

FIG. CR2B

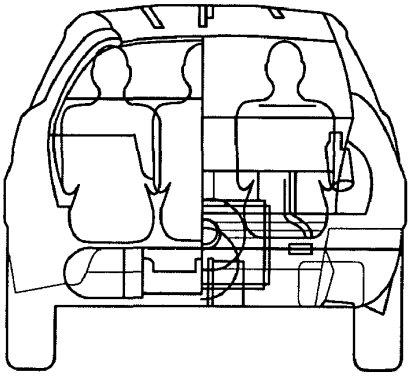

FIG. CR2C

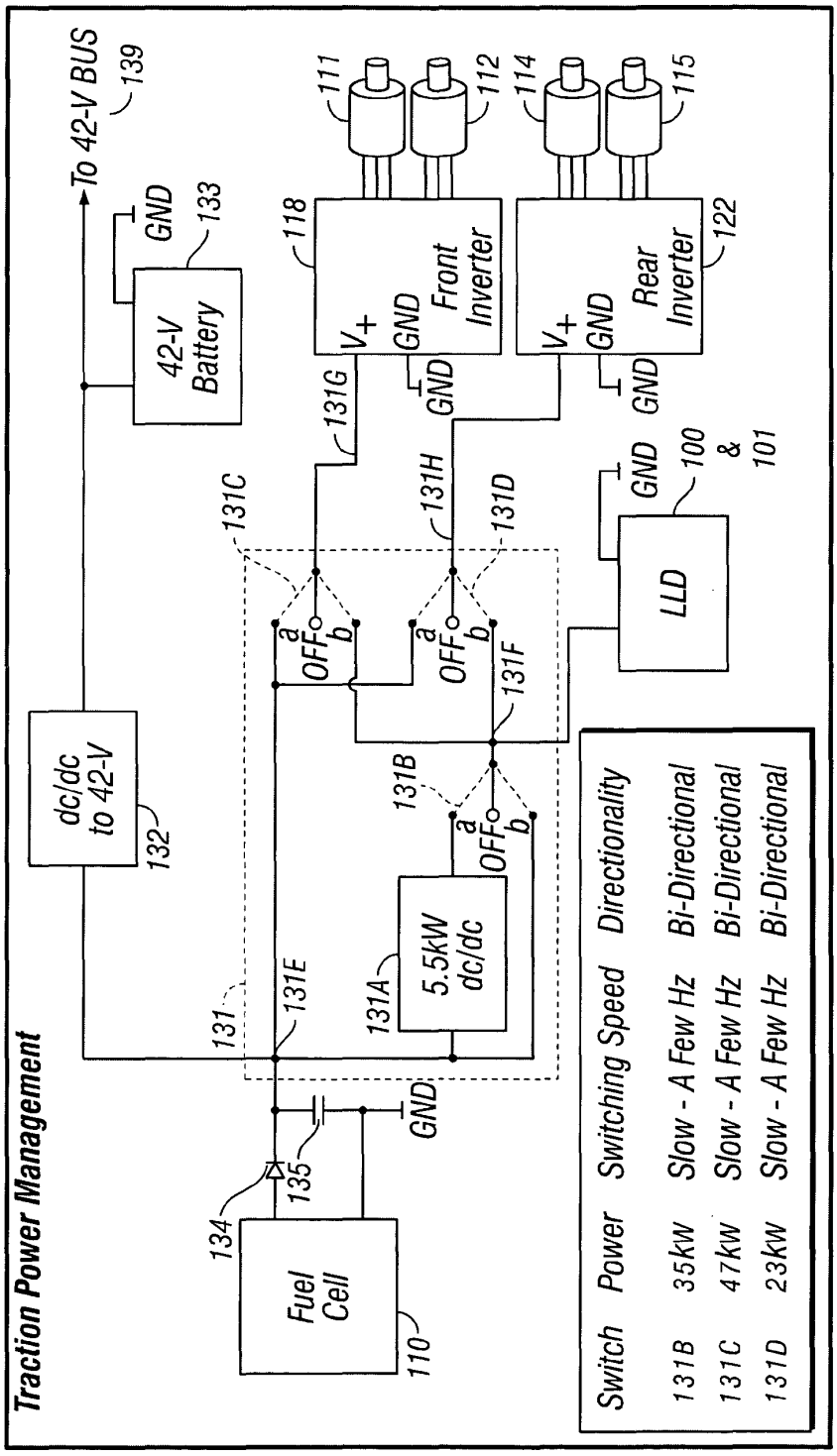
Traction Power Management
To 42-V BUS
139
GND
133
42-V Battery
111
112
114
115
118
Front Inverter
V+
GND
122
Rear Inverter
131G
131H
131C
131D
131F
131B
131A
131E
131
a
OFF
b
5.5kW dc/dc
dc/dc to 42-V
132
LLD
100 & 101
134
135
Fuel Cell
110
Switch Power Switching Speed Directionality
131B 35kW Slow - A Few Hz Bi-Directional
131C 47kW Slow - A Few Hz Bi-Directional
131D 23kW Slow - A Few Hz Bi-Directional

FIG. CR3

STATE	SWITCH 1			SWITCH 2			SWITCH 3			POWER SOURCE***		REGEN POSSIBLE**		LLD CHARGE
	A	OFF	B	A	OFF	B	A	OFF	B	FRONT	REAR	FRONT	REAR	
1	X			X			X			FC	FC			X
2	X			X				X		FC	Off			X
3	X			X					X	FC	LLD & FC*		X	X
4	X				X		X			Off	FC			X
5	X				X			X		Off	Off			X
6	X				X				X	Off	LLD & FC*		X	X
7	X					X	X			LLD & FC*	FC	X		X
8	X					X		X		LLD & FC*	Off	X		X
9	X					X			X	LLD & FC*	LLD & FC*	X	X	X
10		X		X			X			FC	FC			
11		X		X				X		FC	Off			
12		X		X					X	FC	LLD		X	
13		X			X		X			Off	FC			
14		X			X			X		Off	Off			
15		X			X				X	Off	LLD		X	
16		X				X	X			LLD	FC	X		
17		X				X		X		LLD	Off	X		
18		X				X			X	LLD	LLD	X	X	
19			X	X			X			FC	FC			
20			X	X				X		FC	Off			
21			X	X					X	FC	LLD & FC		X	
22			X		X		X			Off	FC			
23			X		X			X		Off	Off			
24			X		X				X	Off	LLD & FC		X	
25			X			X	X			LLD & FC	FC	X		
26			X			X		X		LLD & FC	Off	X		
27			X			X			X	LLD & FC	LLD & FC	X	X	

* FUEL CELL CONNECTED THROUGH THE DC/DC CONVERTER
** REGENERATIVE BRAKING POSSIBLE. DURING REGENERATIVE BRAKING, THE MOTORS ARE CONFIGURED AS GENERATORS AND CONVERT THE KINETIC ENERGY OF THE CAR'S MOTION INTO ELECTRICITY, WHICH CAN THEN BE STORED IN THE LLD.
*** FC = FUEL CELL

FIG. CR4

Traction Power Required (kw)	LLD Full*?	Source of Traction Power & LLD Charging	Switching State Options (States Listed in Table 1)
0	Yes	None	14
	No	LLD Charge	5
0-5.5	Yes	LLD	15, 17, 18
	No	FC Through dc/dc & LLD Charge	6, 8, 9
5.5-29.5	Yes	FC	10, 11, 19, 20
	No	FC+LLD Charge	1, 2, 4, 5
29.5-35	Yes	FC	10, 11, 19, 20
	No	FC	10, 11, 19, 21
>35	Yes	FC+LLD	12, 16, 21, 24, 25, 27
	No	FC+LLD	12, 16, 21, 24, 25, 27

* The LLD is Considered to be Full when it Reaches 80% of its Maximum State of Charge

FIG. CR5

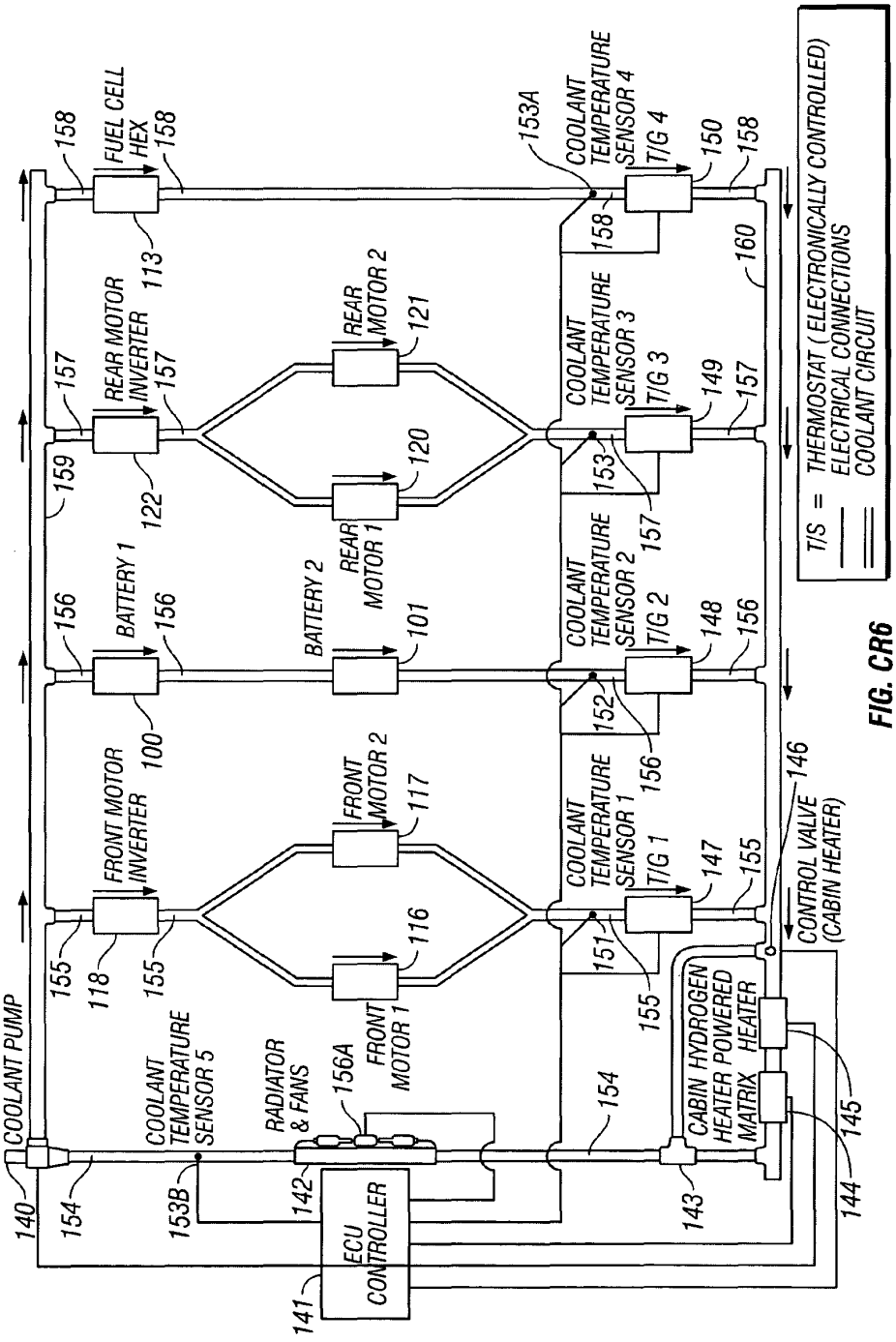
COOLANT PUMP
140
154
COOLANT TEMPERATURE SENSOR 5
153B
RADIATOR & FANS
156A
142
ECU CONTROLLER
141
155
118
FRONT MOTOR INVERTER
100
156
BATTERY 1
BATTERY 2
101
FRONT MOTOR 1
116
FRONT MOTOR 2
117
157
REAR MOTOR INVERTER
122
REAR MOTOR 1
120
REAR MOTOR 2
121
159
158
FUEL CELL HEX
113
COOLANT TEMPERATURE SENSOR 1
T/G 1
151
147
COOLANT TEMPERATURE SENSOR 2
T/G 2
152
148
COOLANT TEMPERATURE SENSOR 3
T/G 3
153
149
COOLANT TEMPERATURE SENSOR 4
T/G 4
153A
150
160
143
CABIN HYDROGEN HEATER POWERED MATRIX HEATER
144
145
146
CONTROL VALVE (CABIN HEATER)
T/S = THERMOSTAT (ELECTRONICALLY CONTROLLED)
ELECTRICAL CONNECTIONS
COOLANT CIRCUIT

FIG. CR6

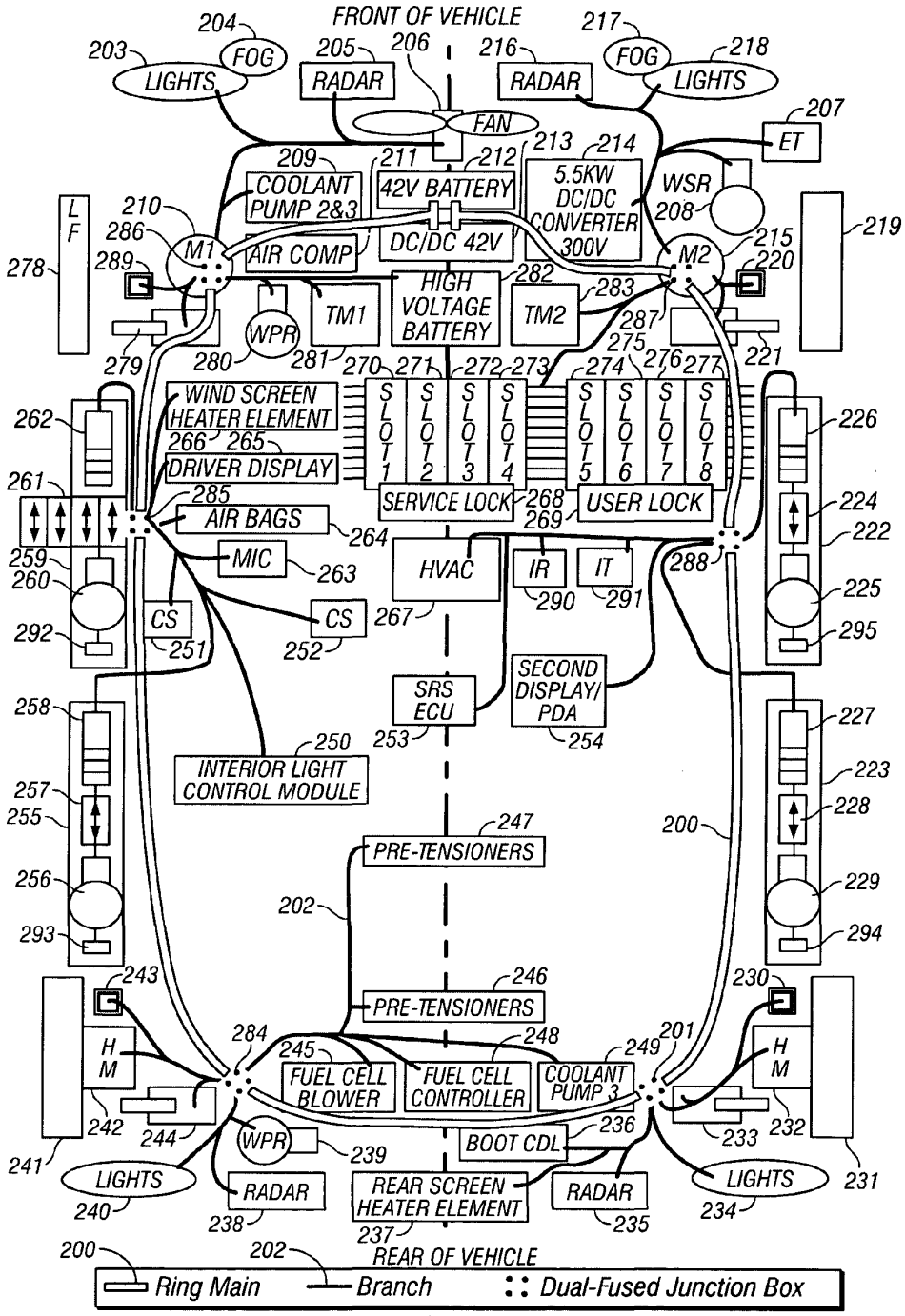
FRONT OF VEHICLE
LIGHTS
FOG
RADAR
FAN
ET
COOLANT PUMP 2&3
42V BATTERY
5.5KW DC/DC CONVERTER 300V
WSR
L F
M1
M2
AIR COMP
DC/DC 42V
HIGH VOLTAGE BATTERY
TM1
TM2
WPR
WIND SCREEN HEATER ELEMENT
DRIVER DISPLAY
SLOT 1
SLOT 2
SLOT 3
SLOT 4
SLOT 5
SLOT 6
SLOT 7
SLOT 8
SERVICE LOCK
USER LOCK
AIR BAGS
MIC
CS
HVAC
IR
IT
SRS ECU
SECOND DISPLAY/ PDA
INTERIOR LIGHT CONTROL MODULE
PRE-TENSIONERS
FUEL CELL BLOWER
FUEL CELL CONTROLLER
COOLANT PUMP 3
BOOT CDL
REAR SCREEN HEATER ELEMENT
H M
REAR OF VEHICLE
Ring Main
Branch
Dual-Fused Junction Box

FIG. D1

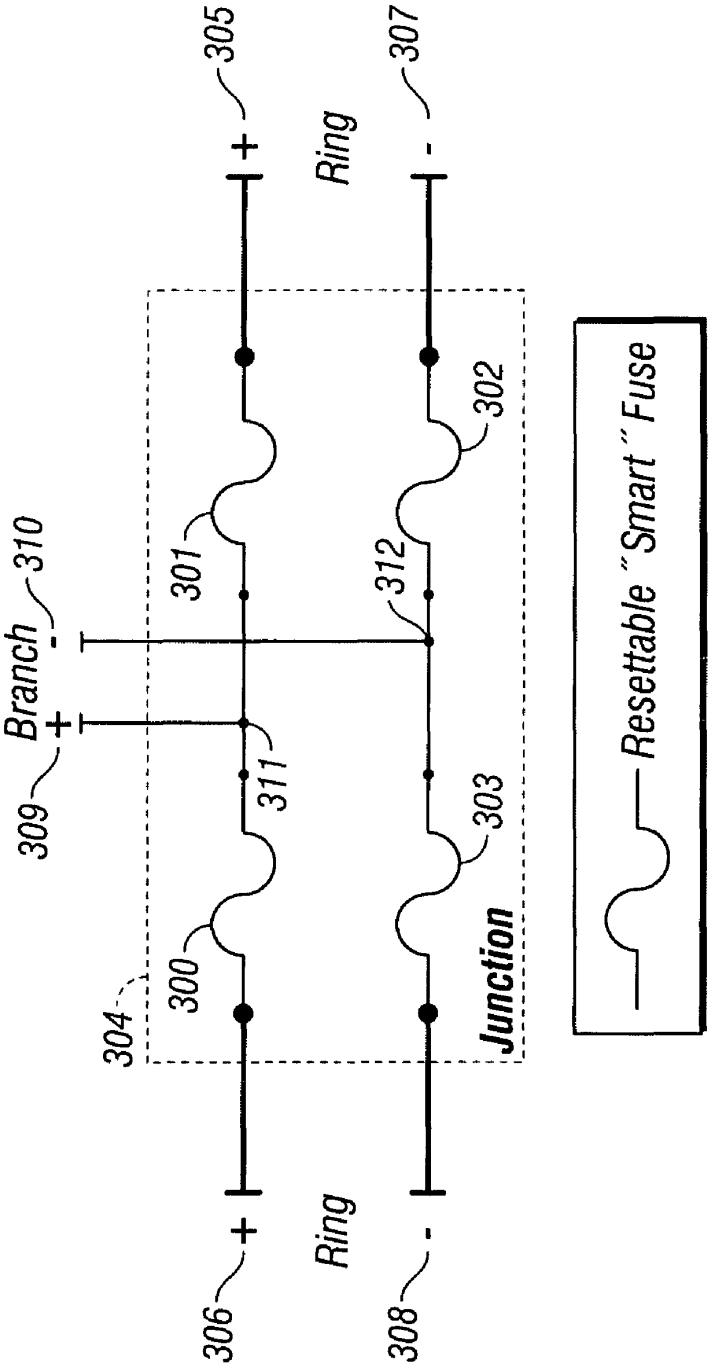
305
307
Ring
302
301
312
310
Branch
309
311
303
300
Junction
304
306
Ring
308
Resettable "Smart" Fuse

FIG. D2

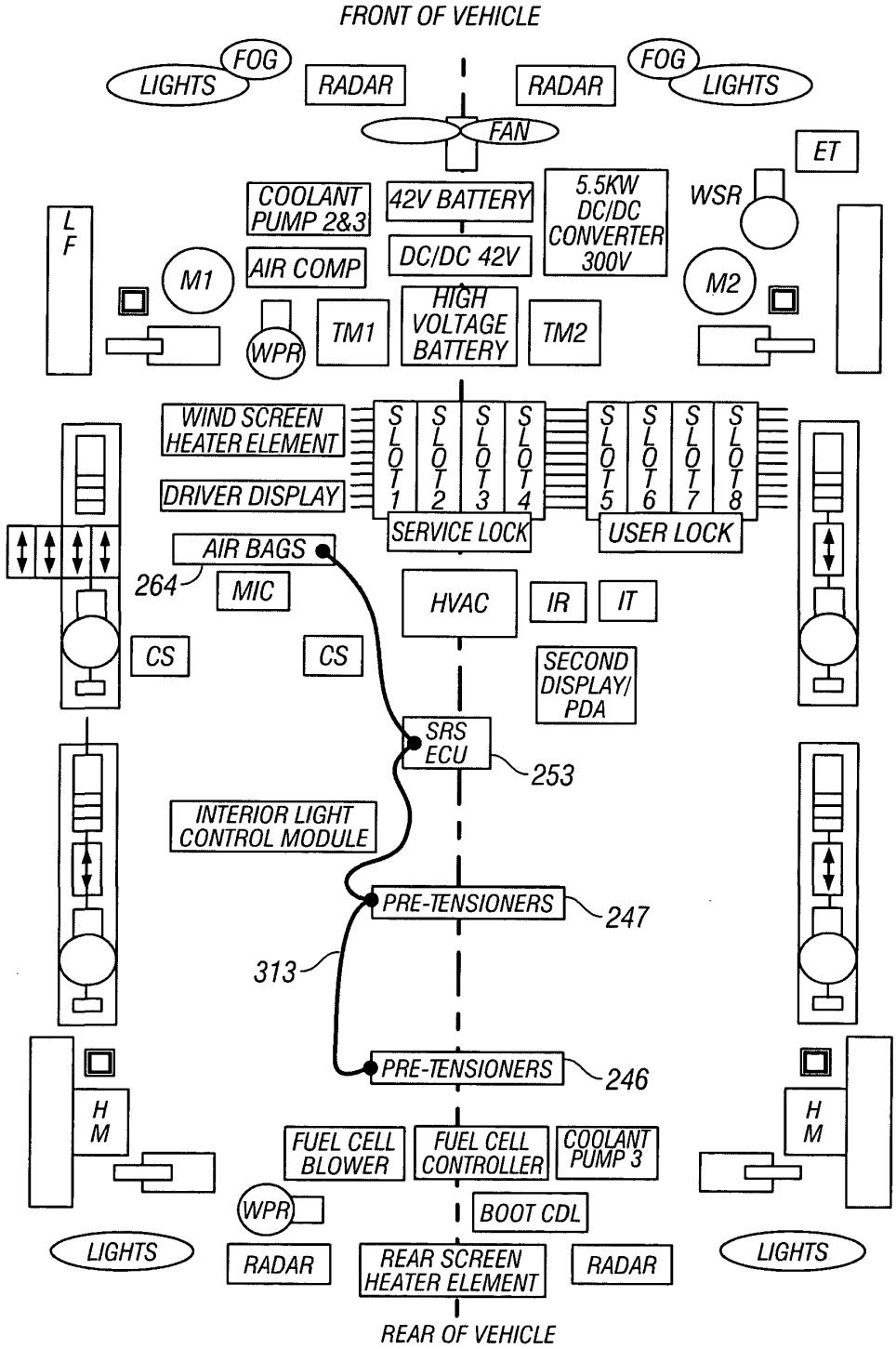
FRONT OF VEHICLE
FOG
LIGHTS
RADAR
RADAR
FOG
LIGHTS
FAN
ET
COOLANT PUMP 2&3
42V BATTERY
5.5KW DC/DC CONVERTER 300V
WSR
L F
M1
AIR COMP
DC/DC 42V
M2
WPR
TM1
HIGH VOLTAGE BATTERY
TM2
WIND SCREEN HEATER ELEMENT
DRIVER DISPLAY
SLOT 1
SLOT 2
SLOT 3
SLOT 4
SLOT 5
SLOT 6
SLOT 7
SLOT 8
SERVICE LOCK
USER LOCK
AIR BAGS
264
MIC
HVAC
IR
IT
CS
CS
SECOND DISPLAY/ PDA
SRS ECU
253
INTERIOR LIGHT CONTROL MODULE
PRE-TENSIONERS
247
313
PRE-TENSIONERS
246
H M
H M
FUEL CELL BLOWER
FUEL CELL CONTROLLER
COOLANT PUMP 3
WPR
BOOT CDL
LIGHTS
RADAR
REAR SCREEN HEATER ELEMENT
RADAR
LIGHTS
REAR OF VEHICLE

FIG. D3

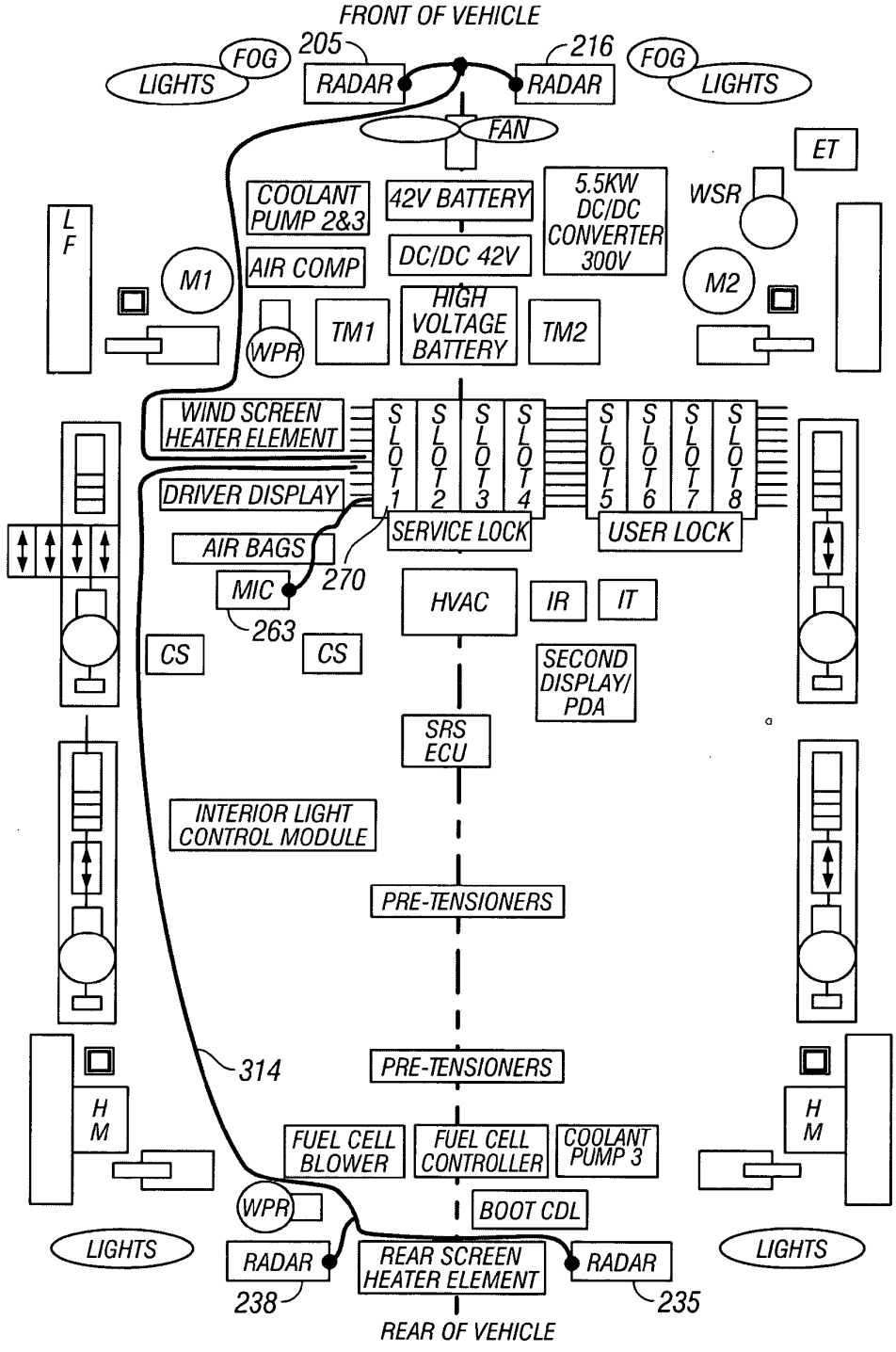
FRONT OF VEHICLE
205
216
FOG
LIGHTS
RADAR
RADAR
FOG
LIGHTS
FAN
ET
WSR
COOLANT PUMP 2&3
42V BATTERY
5.5KW DC/DC CONVERTER 300V
L F
M1
AIR COMP
DC/DC 42V
M2
WPR
TM1
HIGH VOLTAGE BATTERY
TM2
WIND SCREEN HEATER ELEMENT
SLOT 1
SLOT 2
SLOT 3
SLOT 4
SLOT 5
SLOT 6
SLOT 7
SLOT 8
DRIVER DISPLAY
SERVICE LOCK
USER LOCK
AIR BAGS
MIC
270
263
HVAC
IR
IT
CS
CS
SECOND DISPLAY/ PDA
SRS ECU
INTERIOR LIGHT CONTROL MODULE
PRE-TENSIONERS
314
PRE-TENSIONERS
H M
H M
FUEL CELL BLOWER
FUEL CELL CONTROLLER
COOLANT PUMP 3
WPR
BOOT CDL
LIGHTS
RADAR
REAR SCREEN HEATER ELEMENT
RADAR
LIGHTS
238
235
REAR OF VEHICLE

FIG. D4

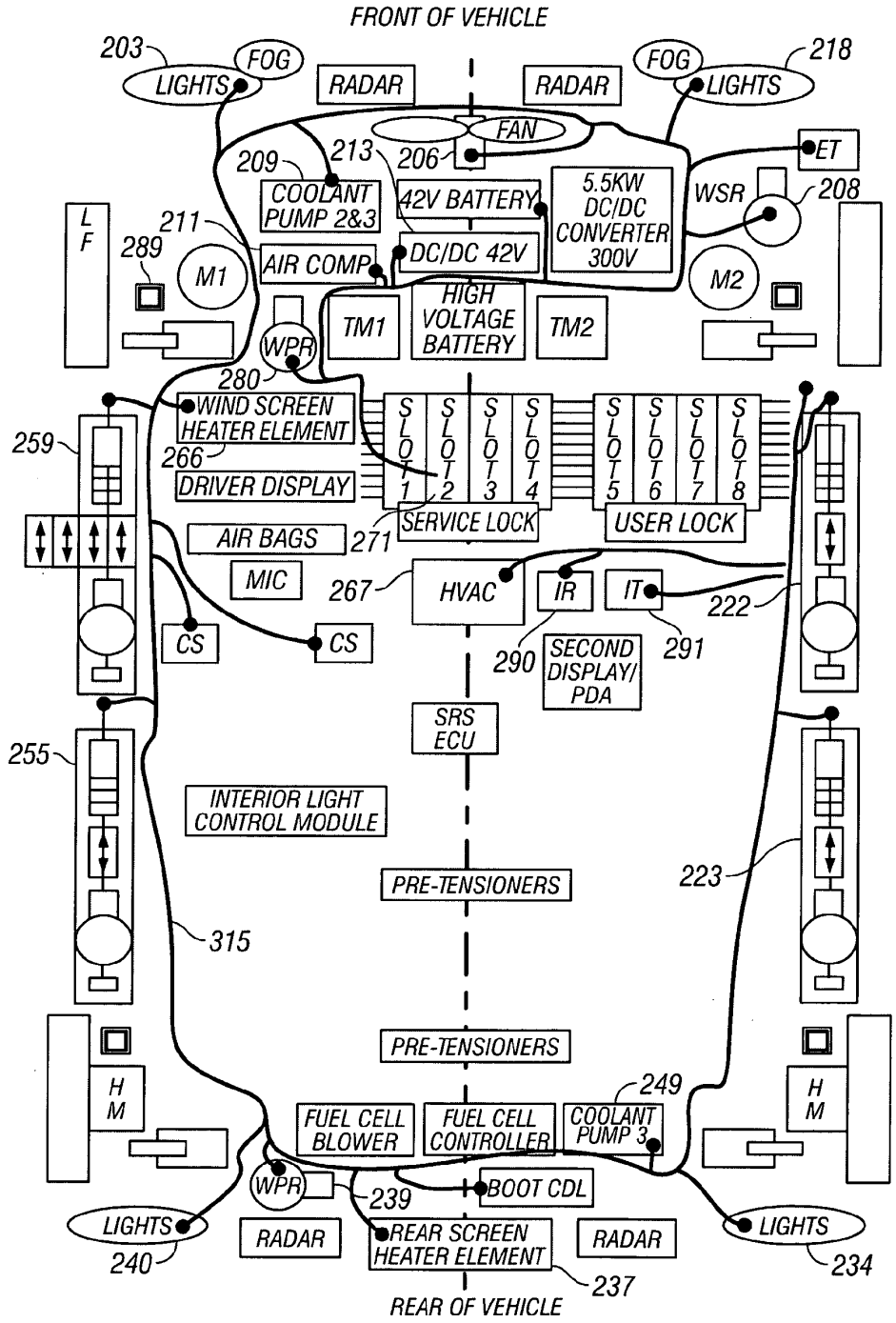
FRONT OF VEHICLE
203
FOG
LIGHTS
RADAR
RADAR
FOG
218
LIGHTS
FAN
ET
209
213
206
COOLANT PUMP 2&3
42V BATTERY
5.5KW DC/DC CONVERTER 300V
WSR
208
L F
211
289
M1
AIR COMP
DC/DC 42V
M2
TM1
HIGH VOLTAGE BATTERY
TM2
WPR
280
WIND SCREEN HEATER ELEMENT
259
266
DRIVER DISPLAY
SLOT 1
SLOT 2
SLOT 3
SLOT 4
SLOT 5
SLOT 6
SLOT 7
SLOT 8
SERVICE LOCK
USER LOCK
271
AIR BAGS
MIC
267
HVAC
IR
IT
222
CS
CS
290
SECOND DISPLAY/ PDA
291
SRS ECU
255
INTERIOR LIGHT CONTROL MODULE
PRE-TENSIONERS
223
315
PRE-TENSIONERS
H M
H M
249
FUEL CELL BLOWER
FUEL CELL CONTROLLER
COOLANT PUMP 3
WPR
239
BOOT CDL
LIGHTS
RADAR
REAR SCREEN HEATER ELEMENT
RADAR
LIGHTS
240
237
234
REAR OF VEHICLE

FIG. D5

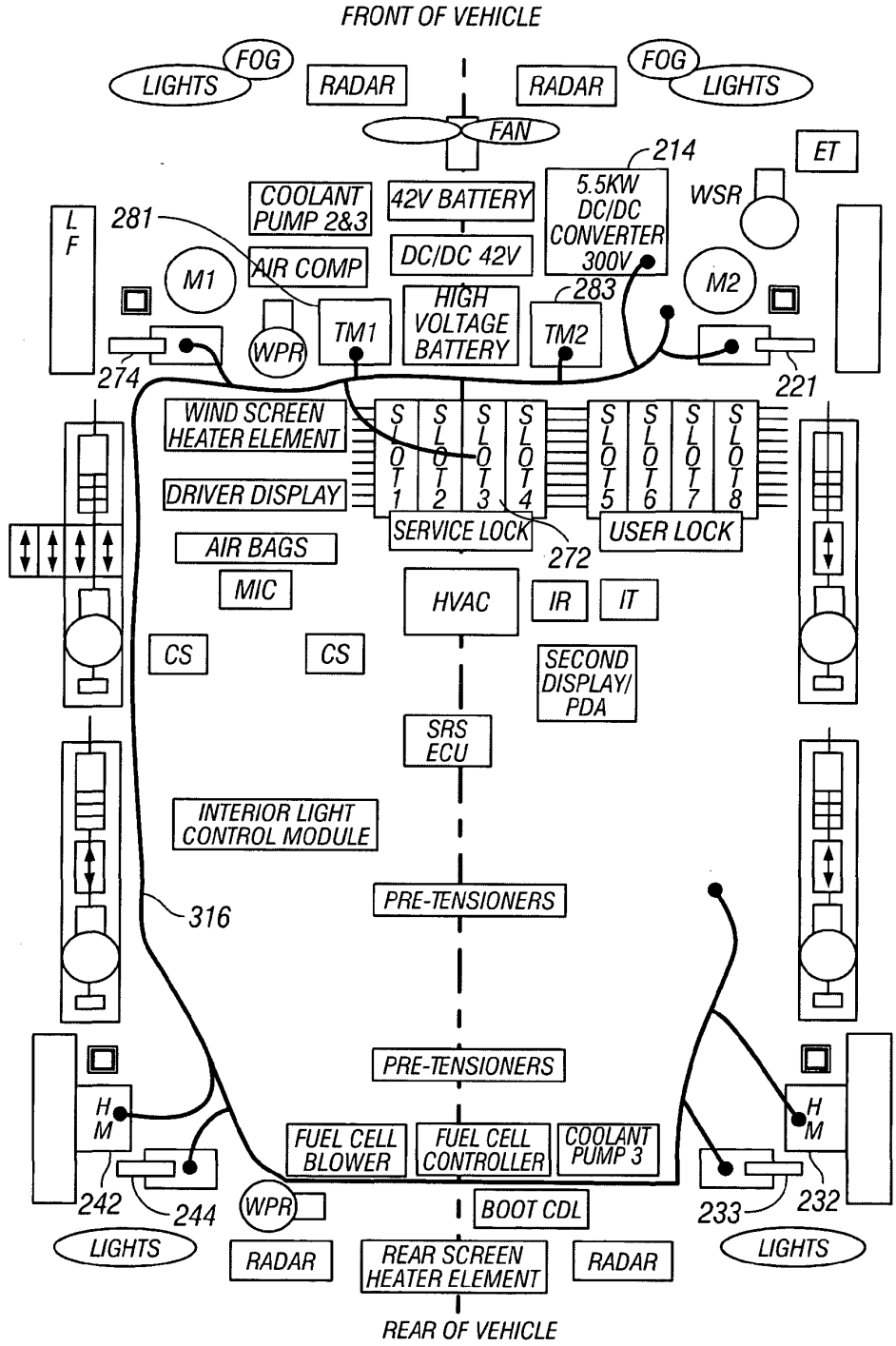
FRONT OF VEHICLE
FOG LIGHTS
RADAR
RADAR
FOG LIGHTS
FAN
214
ET
COOLANT PUMP 2&3
42V BATTERY
5.5KW DC/DC CONVERTER 300V
WSR
L F
281
AIR COMP
DC/DC 42V
M1
M2
283
HIGH VOLTAGE BATTERY
TM1
TM2
WPR
274
221
WIND SCREEN HEATER ELEMENT
SLOT 1
SLOT 2
SLOT 3
SLOT 4
SLOT 5
SLOT 6
SLOT 7
SLOT 8
DRIVER DISPLAY
SERVICE LOCK
USER LOCK
272
AIR BAGS
MIC
HVAC
IR
IT
CS
CS
SECOND DISPLAY/ PDA
SRS ECU
INTERIOR LIGHT CONTROL MODULE
316
PRE-TENSIONERS
PRE-TENSIONERS
H M
H M
FUEL CELL BLOWER
FUEL CELL CONTROLLER
COOLANT PUMP 3
242
244
WPR
BOOT CDL
233
232
LIGHTS
RADAR
REAR SCREEN HEATER ELEMENT
RADAR
LIGHTS
REAR OF VEHICLE

FIG. D6

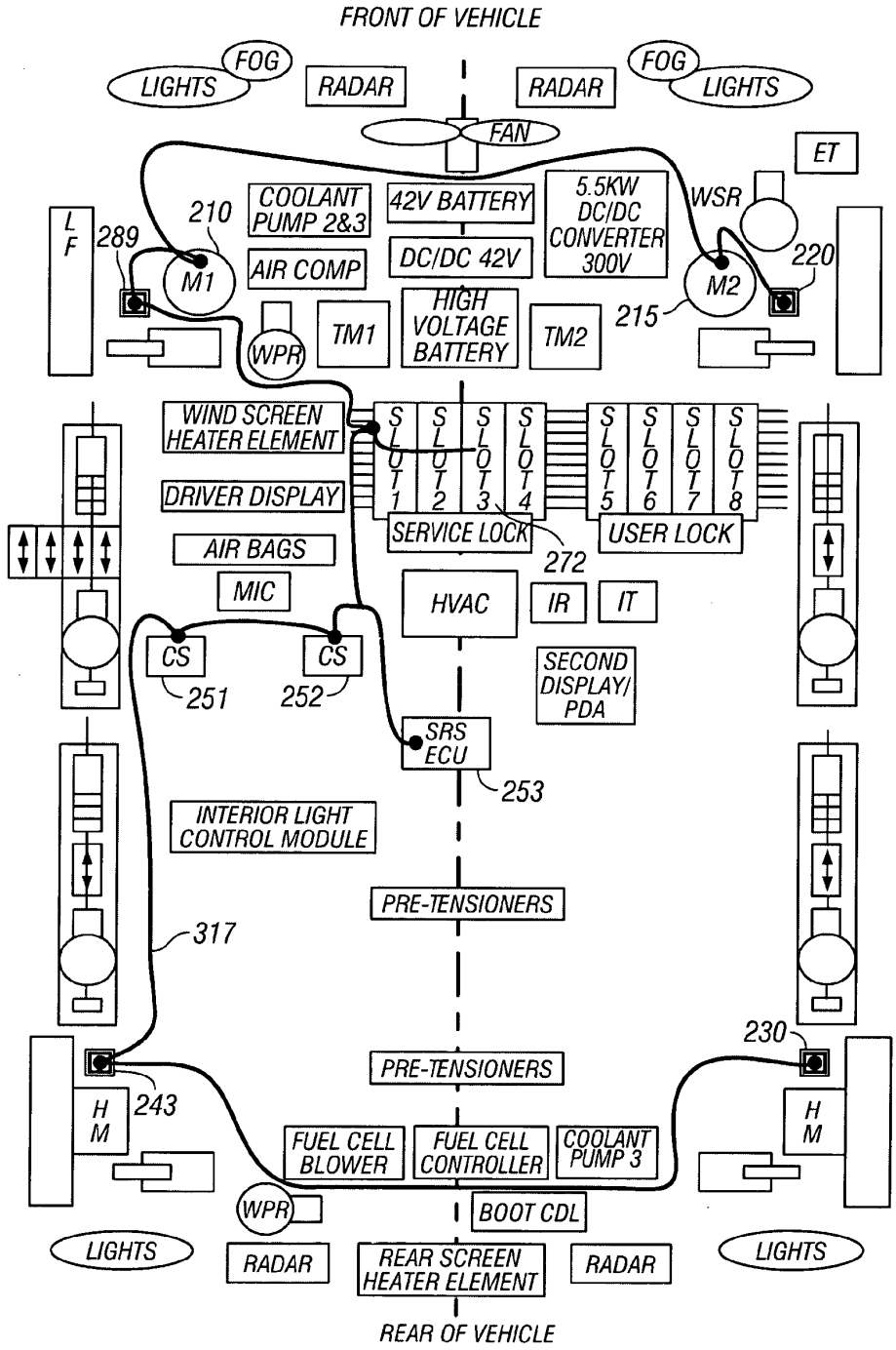
FRONT OF VEHICLE
FOG LIGHTS
RADAR
RADAR
FOG LIGHTS
FAN
ET
COOLANT PUMP 2&3
42V BATTERY
5.5KW DC/DC CONVERTER 300V
WSR
210
289
L F
M1
AIR COMP
DC/DC 42V
M2
220
215
WPR
TM1
HIGH VOLTAGE BATTERY
TM2
WIND SCREEN HEATER ELEMENT
SLOT 1
SLOT 2
SLOT 3
SLOT 4
SLOT 5
SLOT 6
SLOT 7
SLOT 8
DRIVER DISPLAY
SERVICE LOCK
USER LOCK
272
AIR BAGS
MIC
HVAC
IR
IT
CS
CS
251
252
SECOND DISPLAY/ PDA
SRS ECU
253
INTERIOR LIGHT CONTROL MODULE
PRE-TENSIONERS
317
230
PRE-TENSIONERS
243
H M
H M
FUEL CELL BLOWER
FUEL CELL CONTROLLER
COOLANT PUMP 3
WPR
BOOT CDL
LIGHTS
RADAR
REAR SCREEN HEATER ELEMENT
RADAR
LIGHTS
REAR OF VEHICLE

FIG. D7

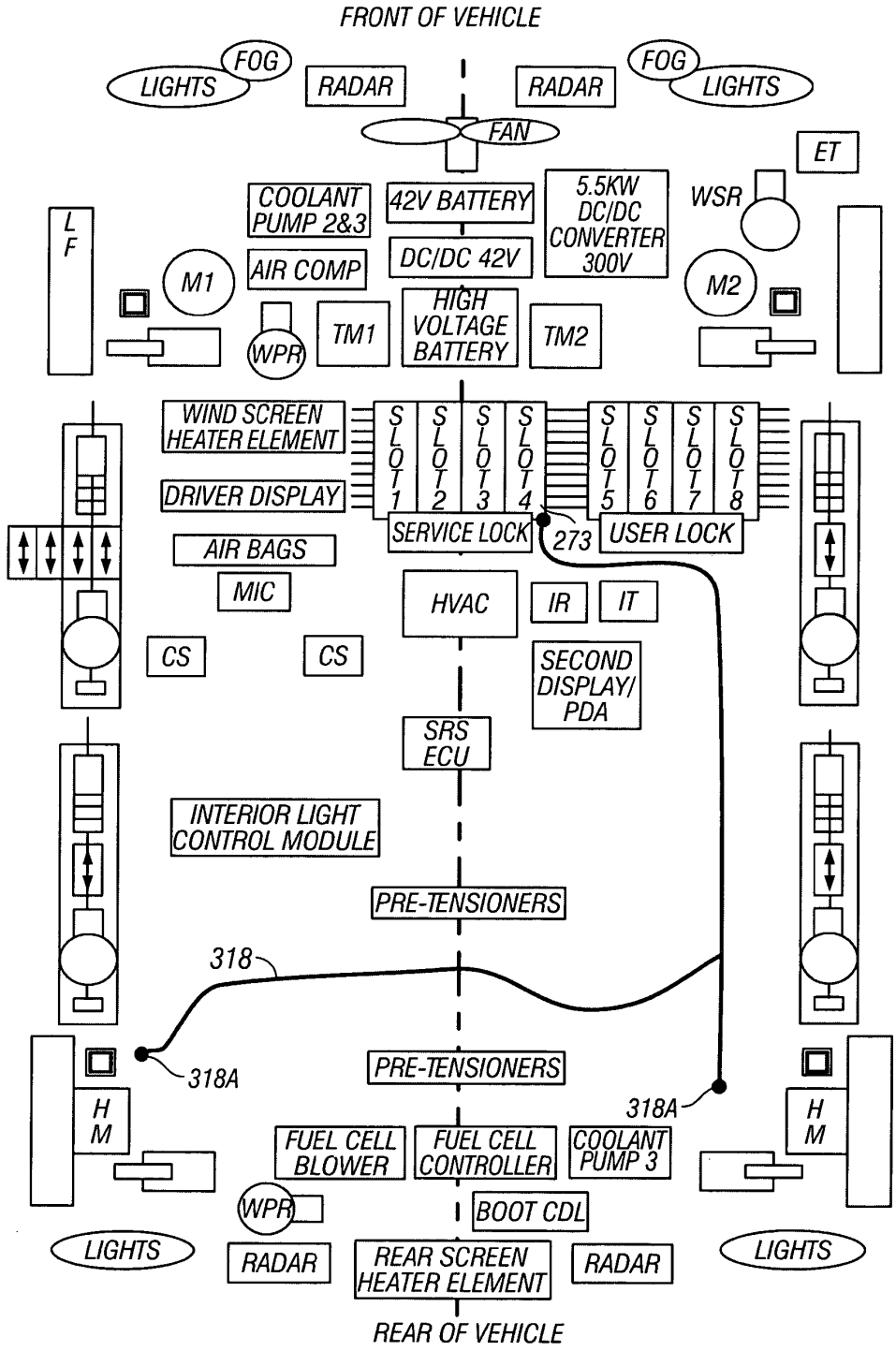
FRONT OF VEHICLE
FOG LIGHTS
RADAR
RADAR
FOG LIGHTS
FAN
ET
COOLANT PUMP 2&3
42V BATTERY
5.5KW DC/DC CONVERTER 300V
WSR
L F
M1
AIR COMP
DC/DC 42V
M2
WPR
TM1
HIGH VOLTAGE BATTERY
TM2
WIND SCREEN HEATER ELEMENT
SLOT 1
SLOT 2
SLOT 3
SLOT 4
SLOT 5
SLOT 6
SLOT 7
SLOT 8
DRIVER DISPLAY
SERVICE LOCK
273
USER LOCK
AIR BAGS
MIC
HVAC
IR
IT
CS
CS
SECOND DISPLAY/ PDA
SRS ECU
INTERIOR LIGHT CONTROL MODULE
PRE-TENSIONERS
318
318A
PRE-TENSIONERS
318A
H M
H M
FUEL CELL BLOWER
FUEL CELL CONTROLLER
COOLANT PUMP 3
WPR
BOOT CDL
LIGHTS
RADAR
REAR SCREEN HEATER ELEMENT
RADAR
LIGHTS
REAR OF VEHICLE

FIG. D8

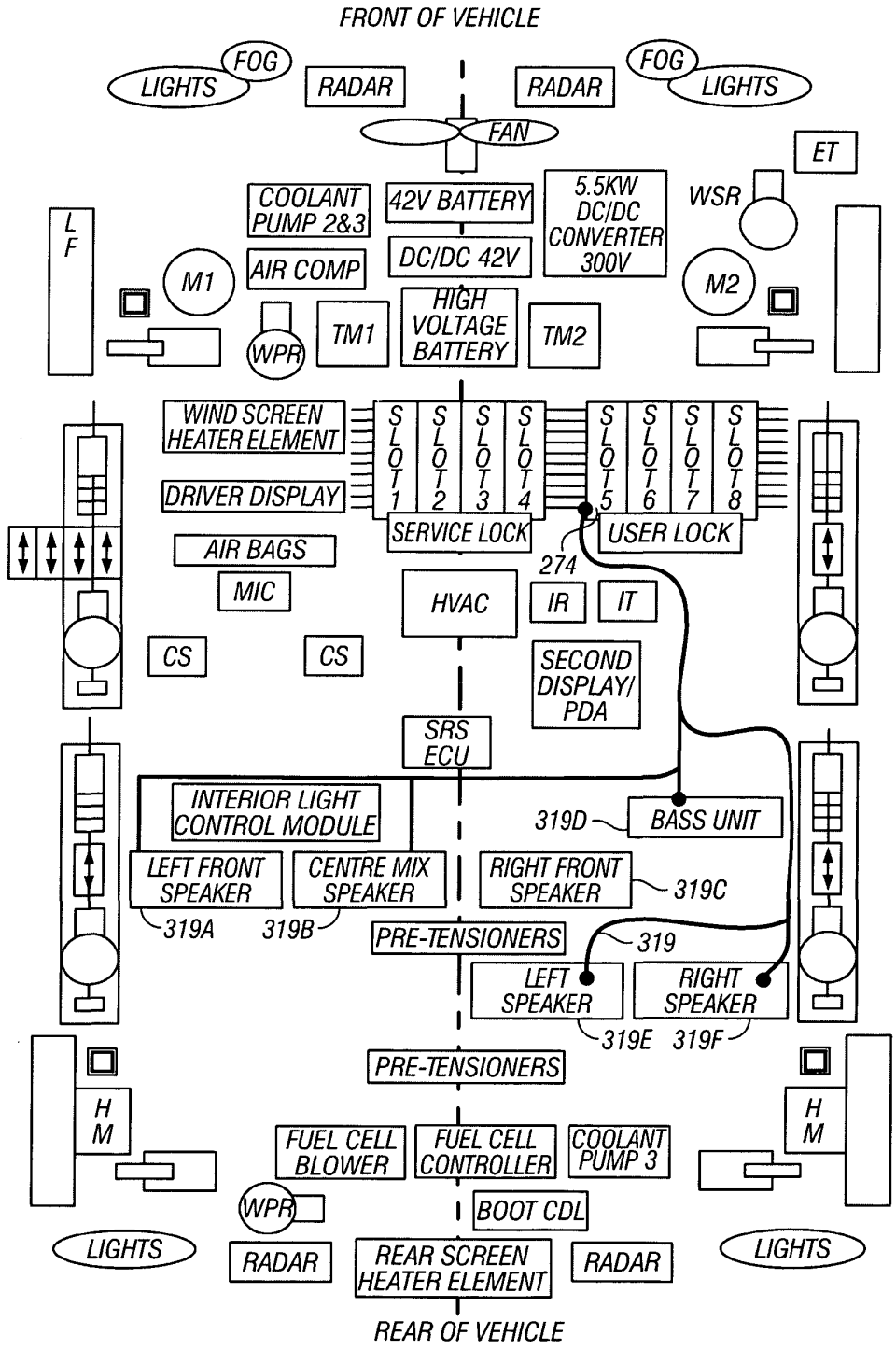
FRONT OF VEHICLE
FOG LIGHTS
RADAR
RADAR
FOG LIGHTS
FAN
ET
COOLANT PUMP 2&3
42V BATTERY
5.5KW DC/DC CONVERTER 300V
WSR
L F
M1
AIR COMP
DC/DC 42V
M2
WPR
TM1
HIGH VOLTAGE BATTERY
TM2
WIND SCREEN HEATER ELEMENT
SLOT 1
SLOT 2
SLOT 3
SLOT 4
SLOT 5
SLOT 6
SLOT 7
SLOT 8
DRIVER DISPLAY
SERVICE LOCK
USER LOCK
AIR BAGS
274
MIC
HVAC
IR
IT
CS
CS
SECOND DISPLAY/ PDA
SRS ECU
INTERIOR LIGHT CONTROL MODULE
319D
BASS UNIT
LEFT FRONT SPEAKER
CENTRE MIX SPEAKER
RIGHT FRONT SPEAKER
319C
319A
319B
PRE-TENSIONERS
319
LEFT SPEAKER
RIGHT SPEAKER
319E
319F
PRE-TENSIONERS
H M
H M
FUEL CELL BLOWER
FUEL CELL CONTROLLER
COOLANT PUMP 3
WPR
BOOT CDL
LIGHTS
RADAR
REAR SCREEN HEATER ELEMENT
RADAR
LIGHTS
REAR OF VEHICLE

FIG. D9

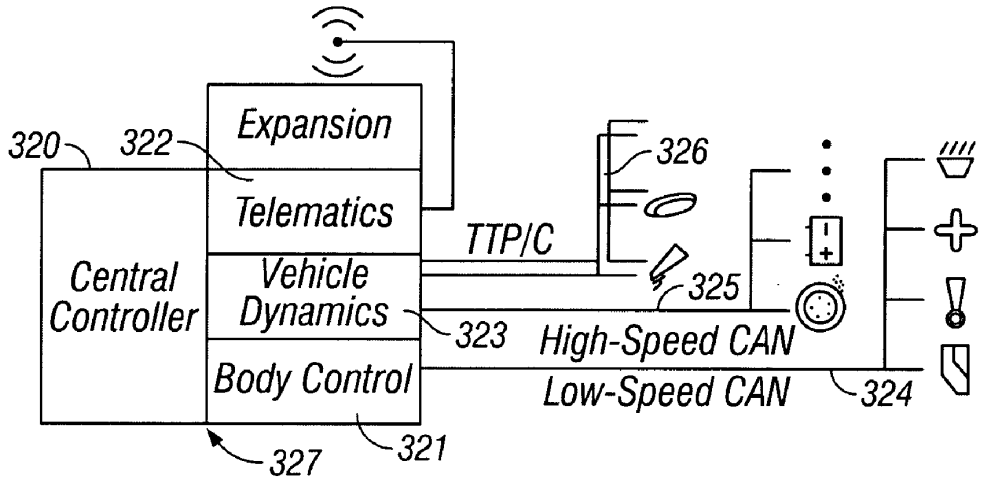
320
322
Expansion
Telematics
Central Controller
Vehicle Dynamics
Body Control
TTP/C
326
325
323
High-Speed CAN
Low-Speed CAN
324
327
321

FIG. D10

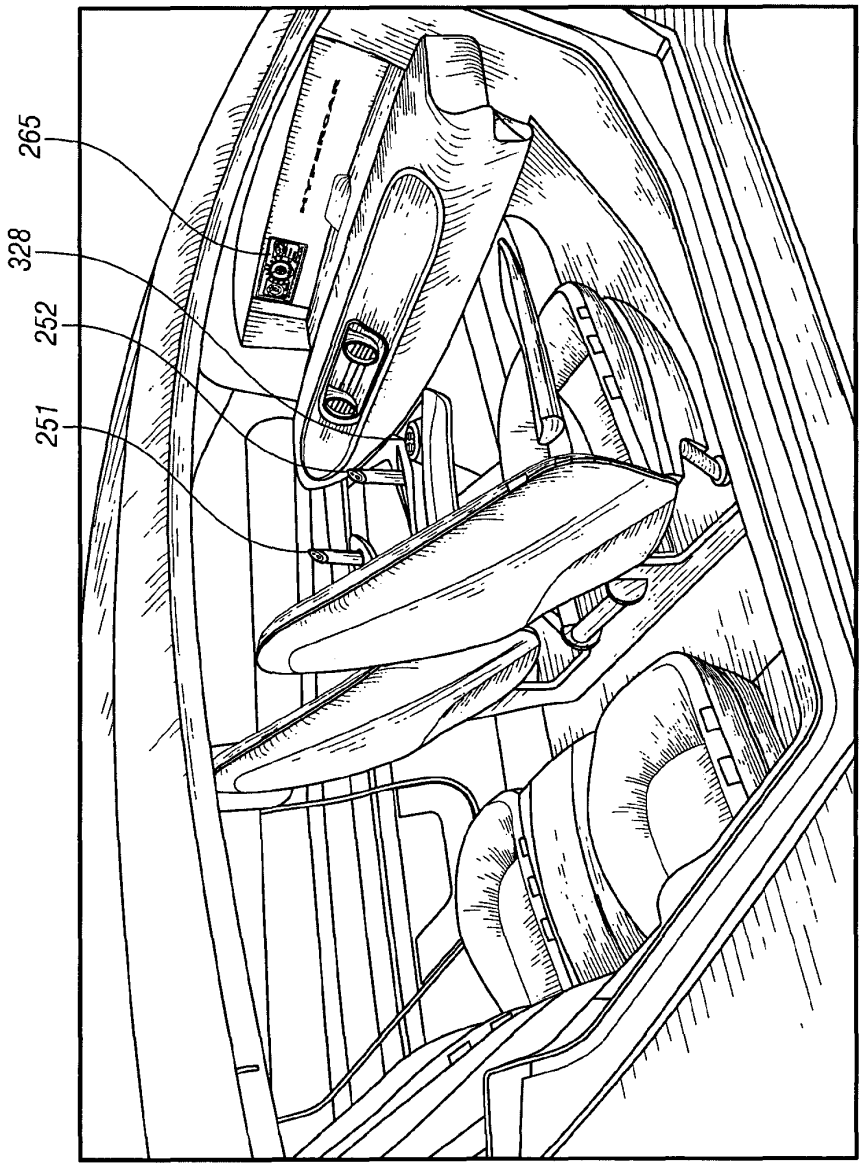

FIG. D11

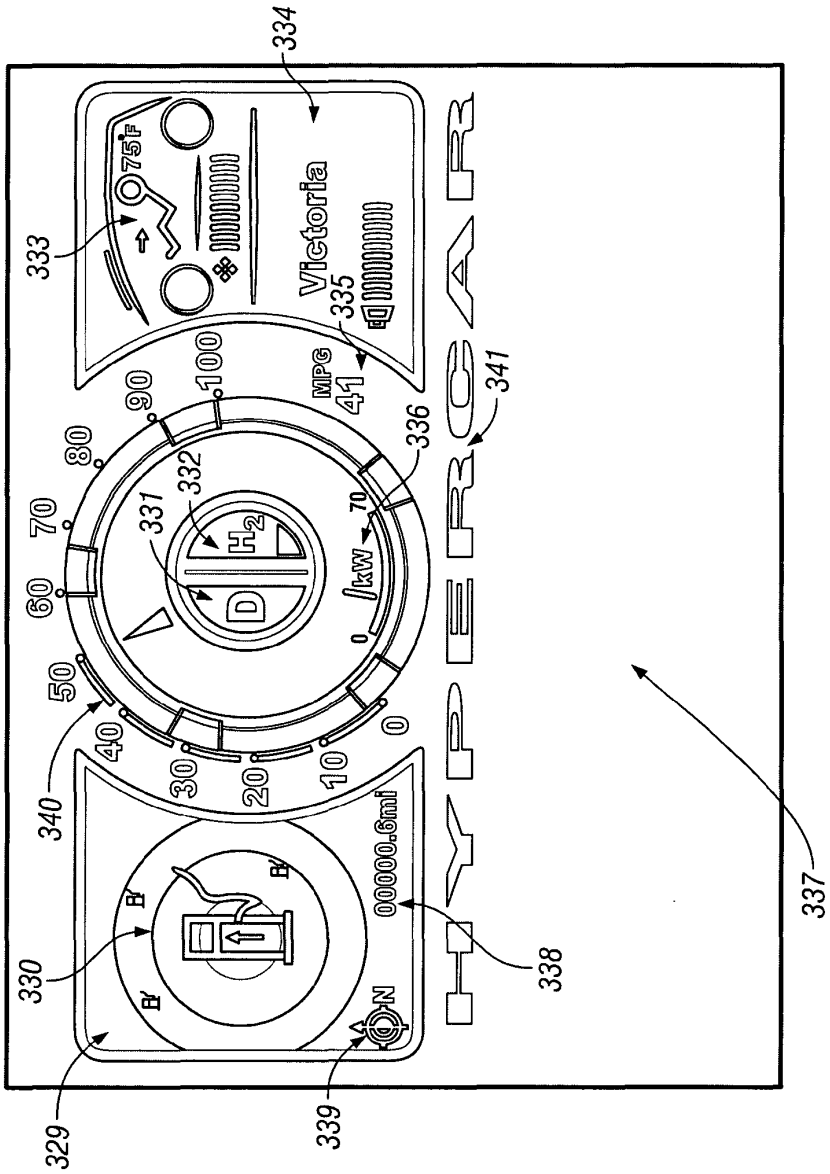
334
333
75°F
Victoria
335
MPG
41
341
336
100
90
80
70
60
50
40
30
20
10
0
332
331
H_2
D
kW
70
0
340
00000.6mi
330
338
N
329
339
337
HYPERCAR

FIG. D12

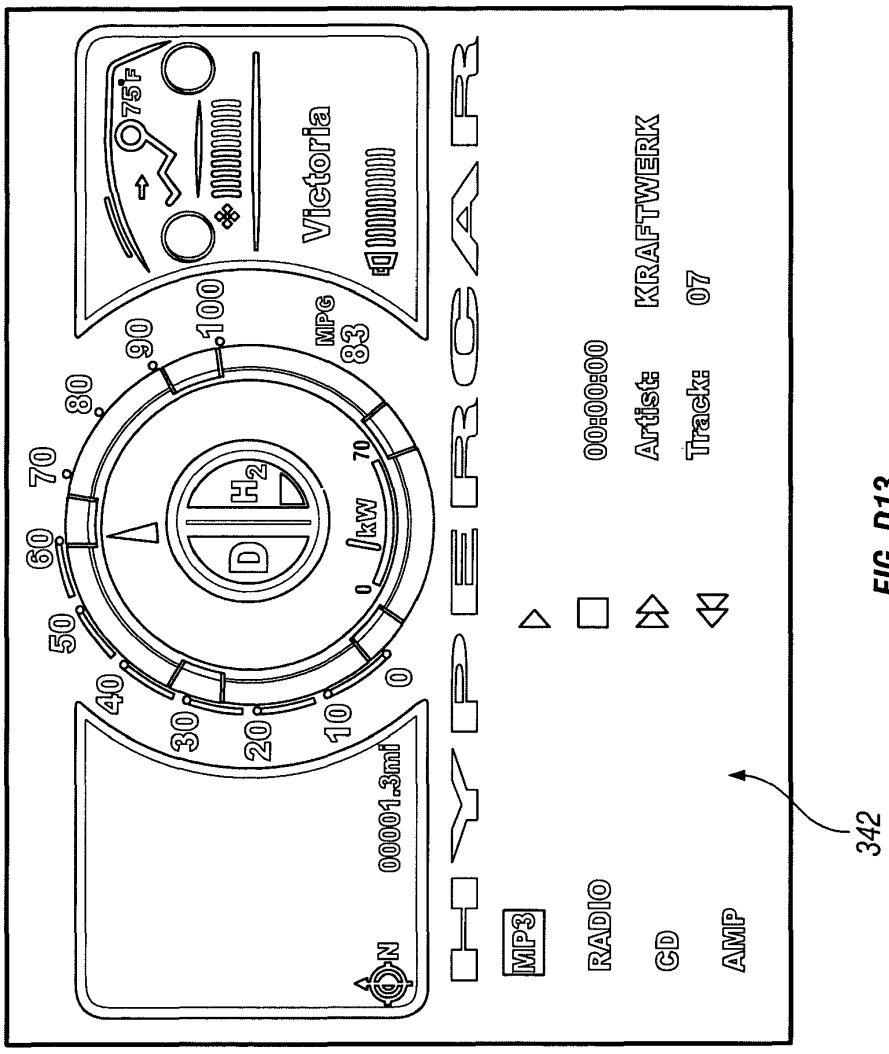
HYPERCAR
Victoria
75°F
MPG
83
100
90
80
70
60
50
40
30
20
10
0
D
H2
kW
0
70
00001.3mi
N
MP3
RADIO
CD
AMP
00:00:00
Artist: KRAFTWERK
Track: 07
342

FIG. D13

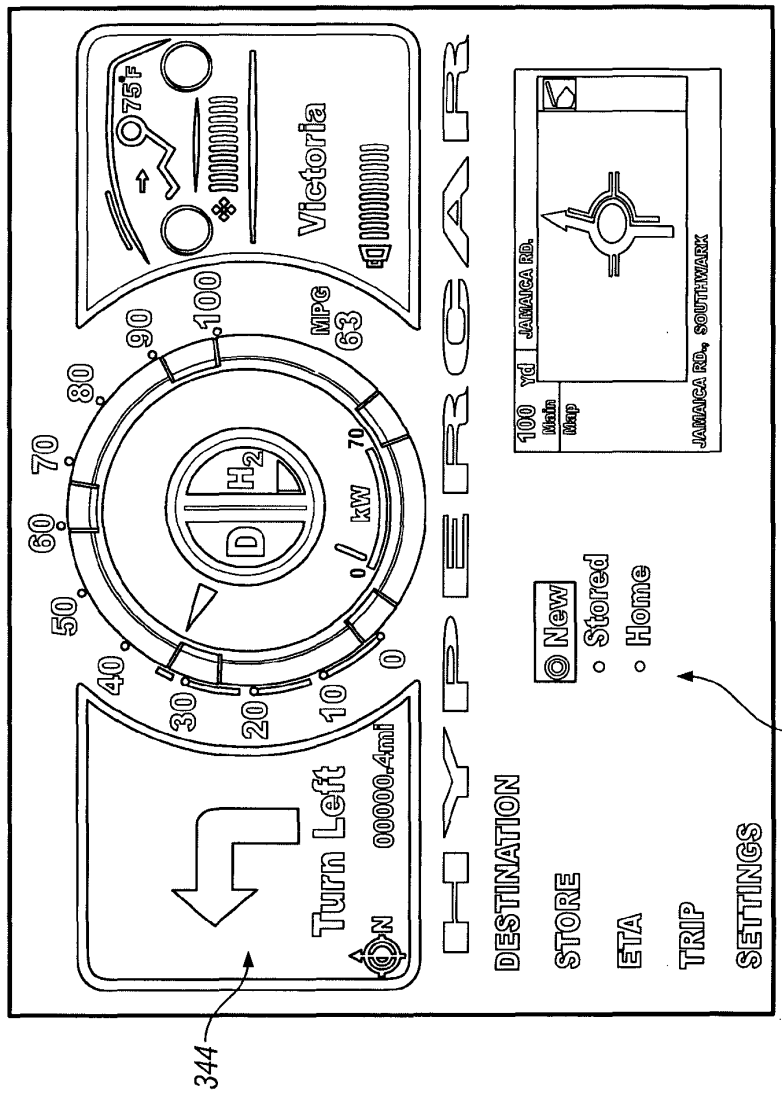
Turn Left
00000.4mi
N
HYPERGAR
DESTINATION
STORE
ETA
TRIP
SETTINGS
New
Stored
Home
Victoria
75°F
MPG
63
kW
D
H2
0
10
20
30
40
50
60
70
80
90
100
100 Yd
Main
Map
JAMAICA RD.
JAMAICA RD., SOUTHWARK
343
344

FIG. D14

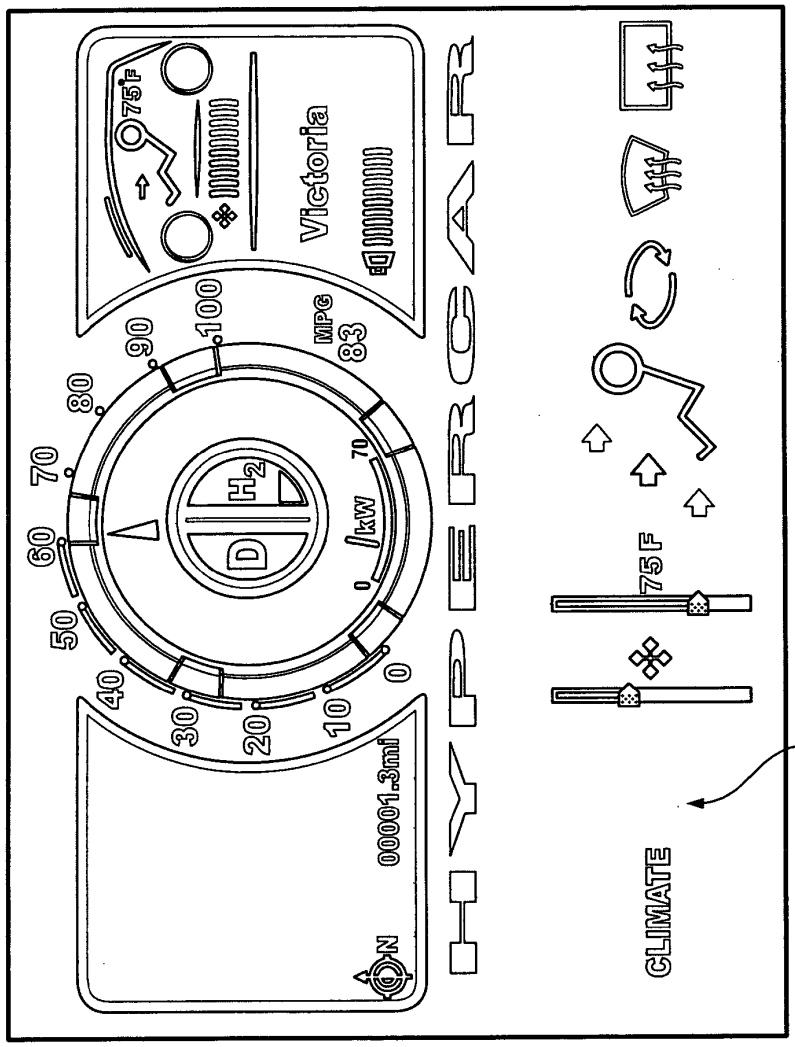
HYPERCAR
Victoria
75°F
MPG
83
100
90
80
70
60
50
40
30
20
10
0
D
H2
kW
0
70
00001.3mi
N
CLIMATE
75 F
345

FIG. D15

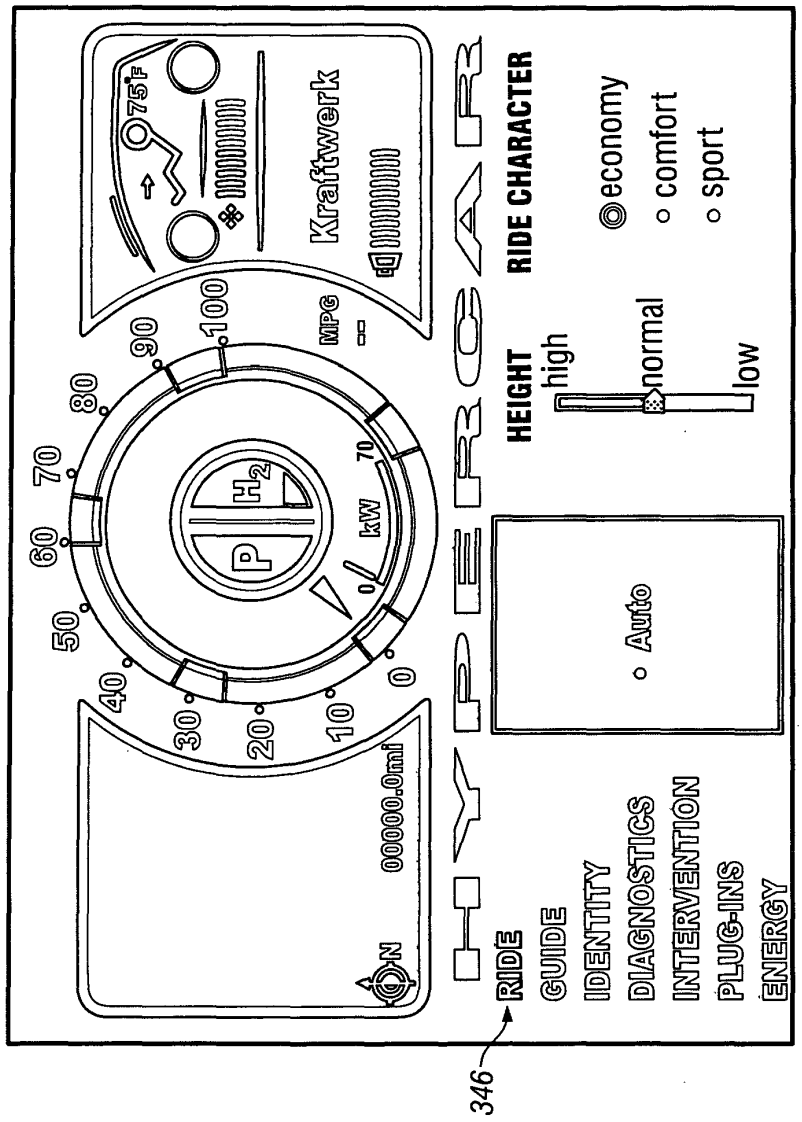
HYPERCAR
RIDE
GUIDE
IDENTITY
DIAGNOSTICS
INTERVENTION
PLUG-INS
ENERGY
Auto
HEIGHT
high
normal
low
RIDE CHARACTER
economy
comfort
sport
Kraftwerk
75°F
MPG
kW
00000.0mi
346

FIG. D16

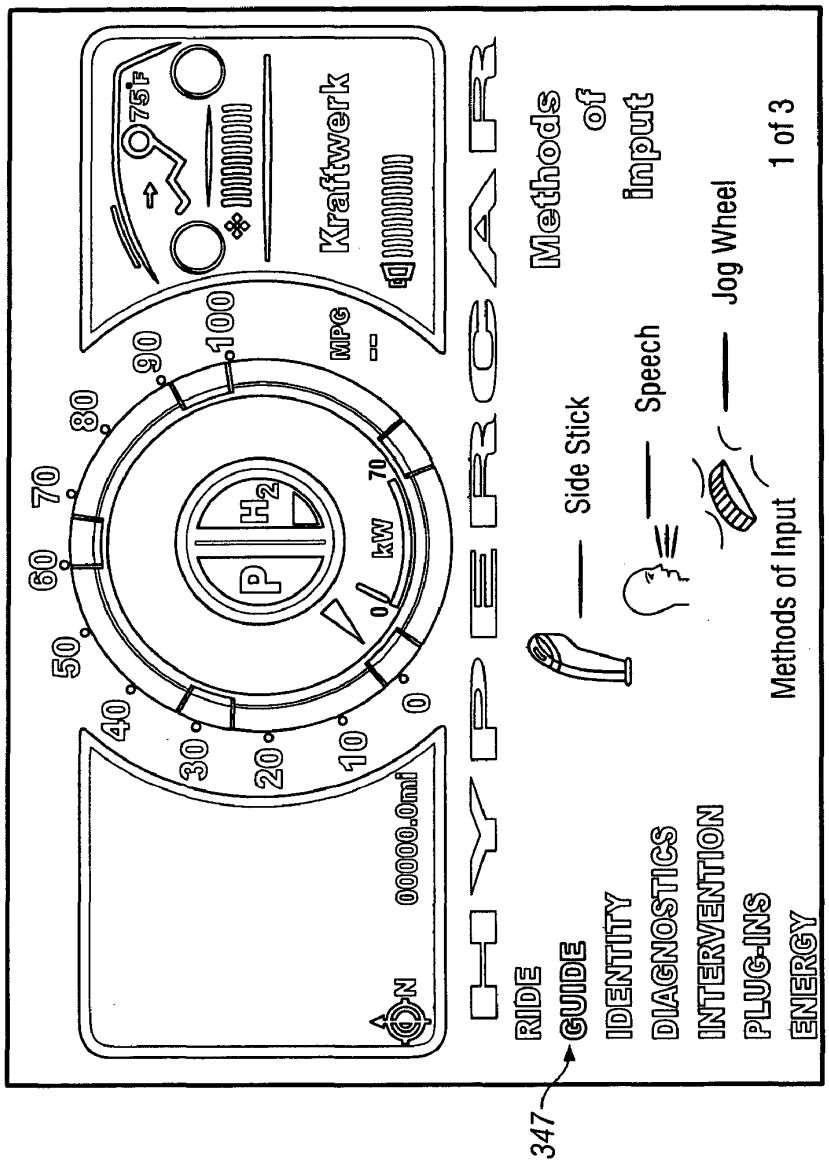
HYPERCAR
Methods of Input
1 of 3
Kraftwerk
75°F
MPG
kW
00000.0mi
RIDE
GUIDE
IDENTITY
DIAGNOSTICS
INTERVENTION
PLUG-INS
ENERGY
Side Stick
Speech
Jog Wheel
Methods of Input
347

FIG. D17

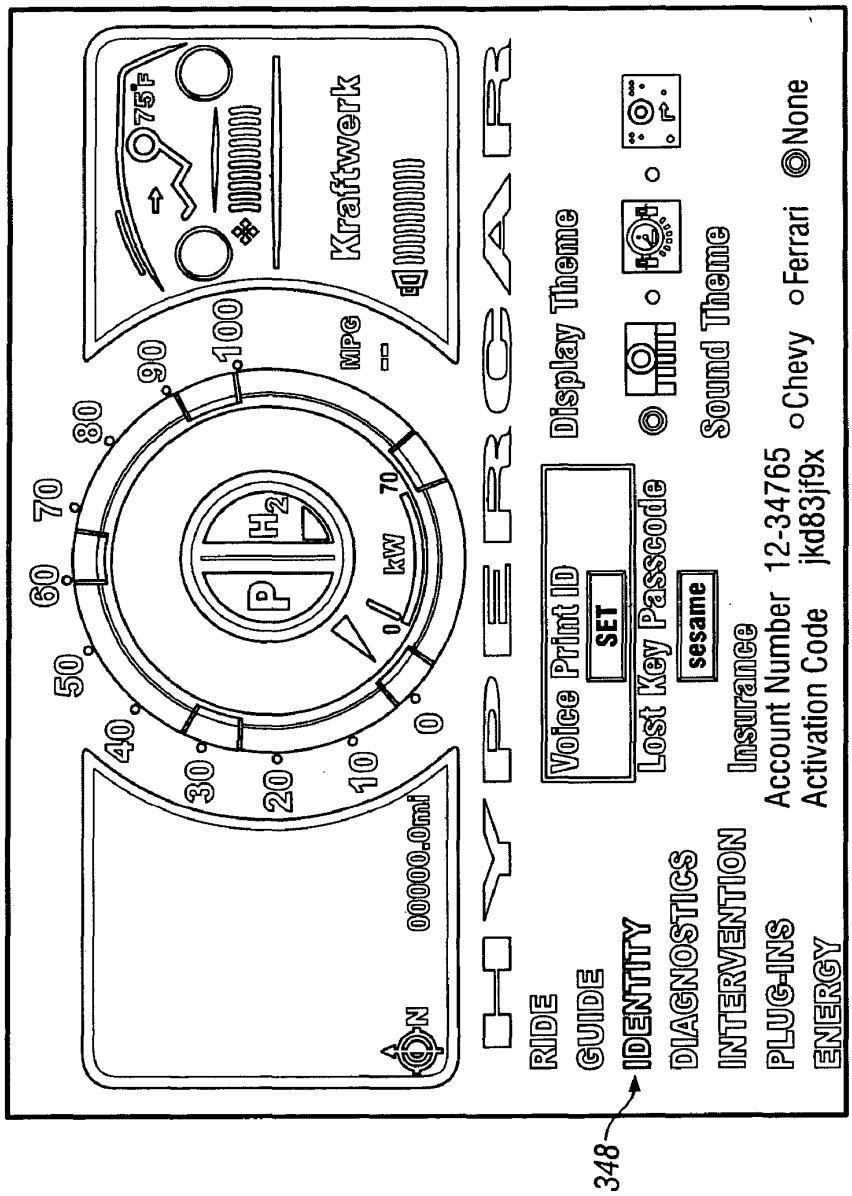
HYPERCAR
RIDE
GUIDE
IDENTITY
DIAGNOSTICS
INTERVENTION
PLUG-INS
ENERGY
Voice Print ID
SET
Lost Key Passcode
sesame
Insurance
Account Number 12-34765
Activation Code jkd83jf9x
Display Theme
Sound Theme
Chevy
Ferrari
None
Kraftwerk
MPG
kW
00000.0mi
75°F
348

FIG. D18

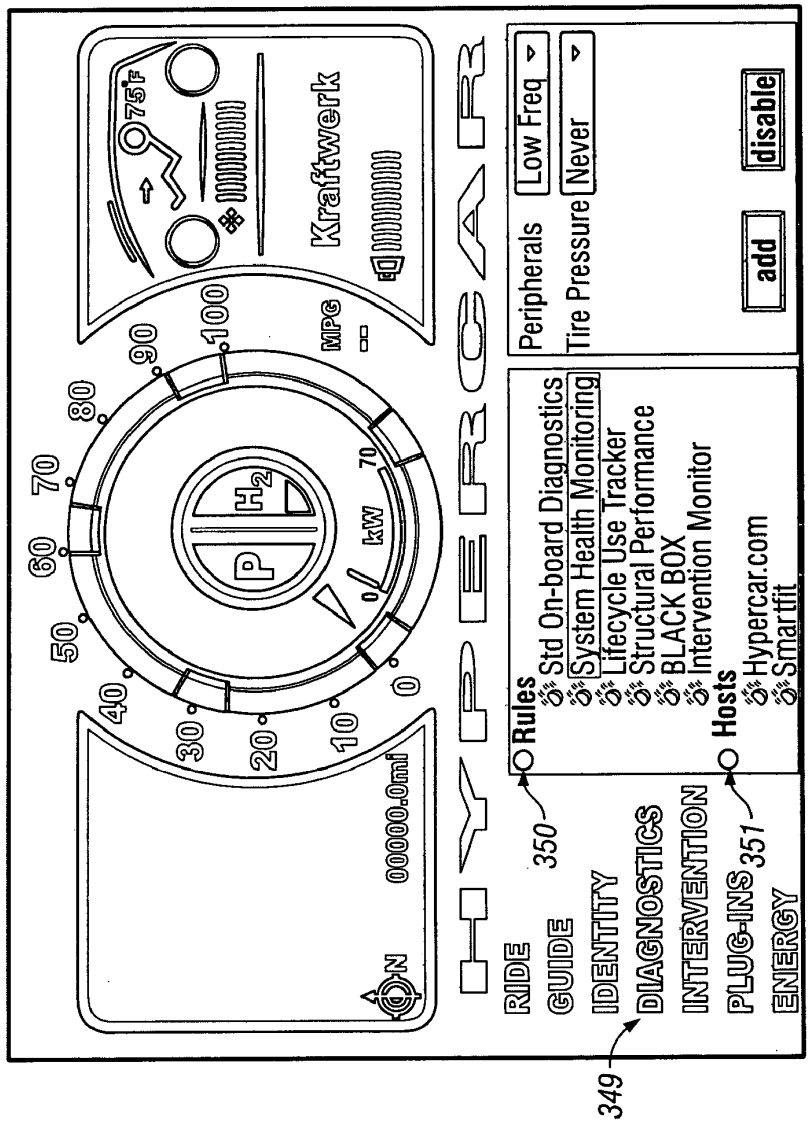
HYPERCAR
RIDE
GUIDE
IDENTITY
DIAGNOSTICS
INTERVENTION
PLUG-INS
ENERGY
Rules
Std On-board Diagnostics
System Health Monitoring
Lifecycle Use Tracker
Structural Performance
BLACK BOX
Intervention Monitor
Hosts
Hypercar.com
Smartfit
Peripherals
Low Freq
Tire Pressure
Never
add
disable
Kraftwerk
MPG
kW
00000.0mi
75°F
349
350
351

FIG. D19

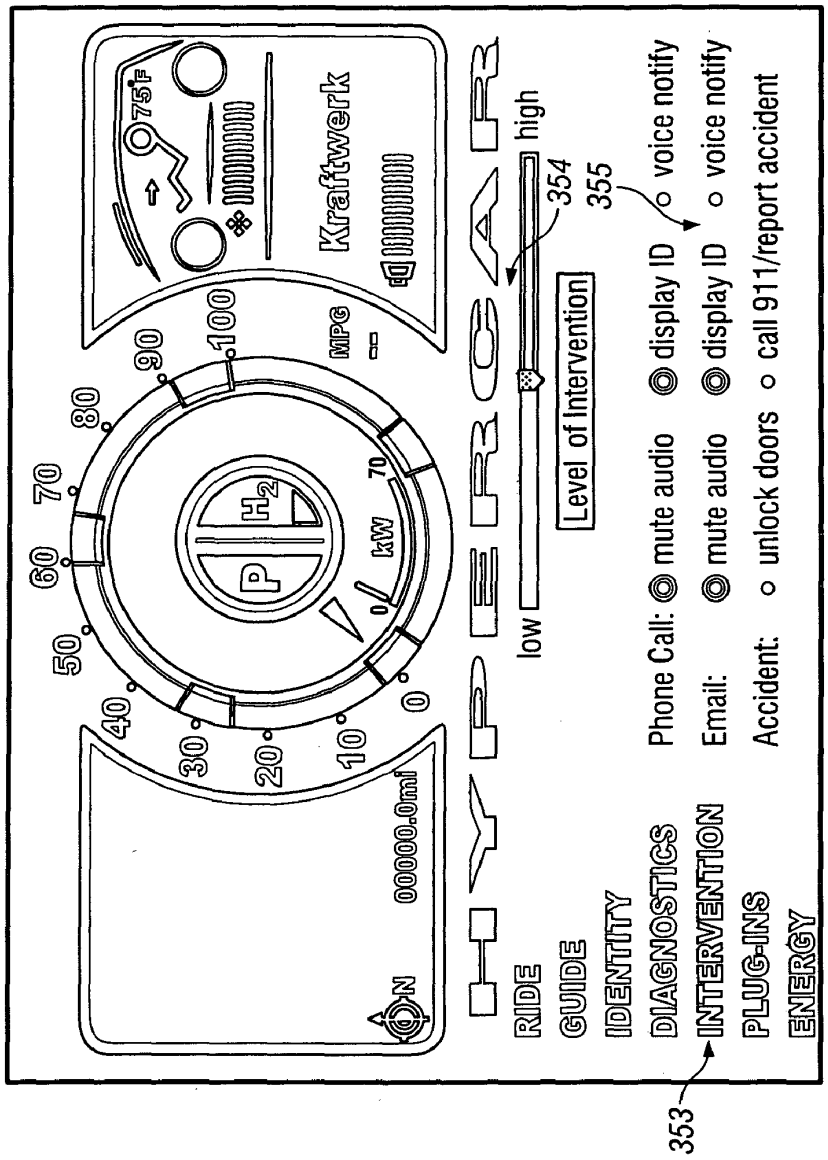
HYPERCAR
RIDE
GUIDE
IDENTITY
DIAGNOSTICS
INTERVENTION
PLUG-INS
ENERGY
Kraftwerk
75°F
MPG
kW
H2
P
0
10
20
30
40
50
60
70
80
90
100
70
00000.0mi
N
low
high
Level of Intervention
Phone Call: mute audio display ID voice notify
Email: mute audio display ID voice notify
Accident: unlock doors call 911/report accident
353
354
355

FIG. D20

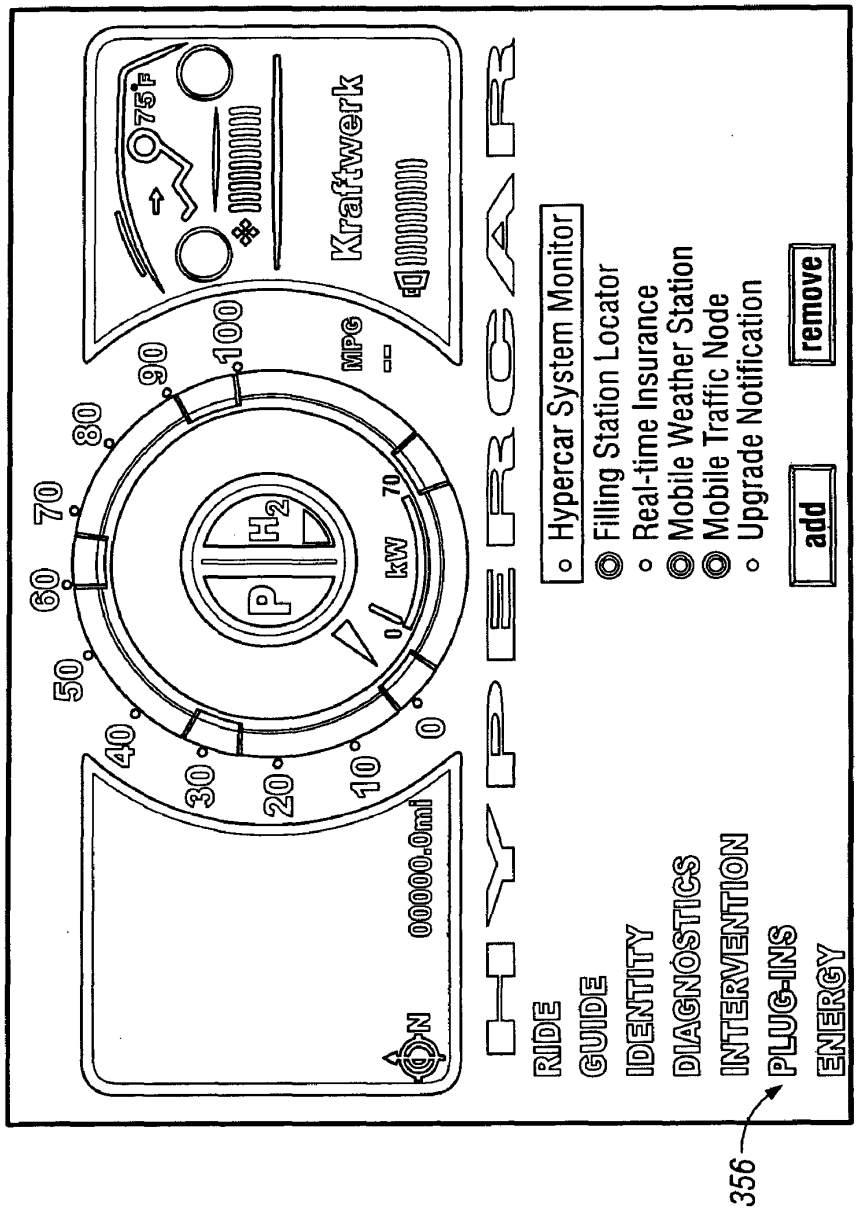
HYPERCAR
RIDE
GUIDE
IDENTITY
DIAGNOSTICS
INTERVENTION
PLUG-INS
ENERGY
00000.0mi
N
0
10
20
30
40
50
60
70
80
90
100
P
H2
kW
70
MPG
--
Kraftwerk
75°F
Hypercar System Monitor
Filling Station Locator
Real-time Insurance
Mobile Weather Station
Mobile Traffic Node
Upgrade Notification
add
remove
356

FIG. D21

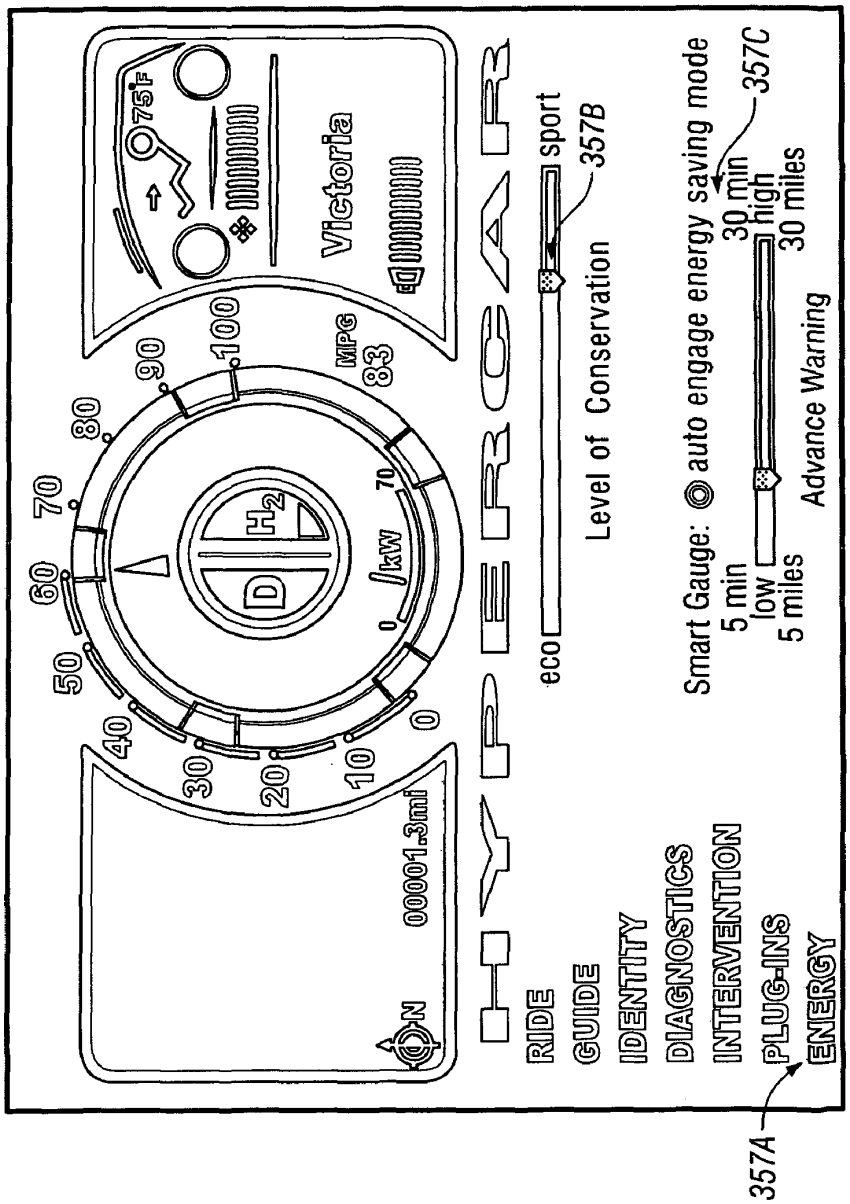
HYPERCAR
RIDE
GUIDE
IDENTITY
DIAGNOSTICS
INTERVENTION
PLUG-INS
ENERGY
357A
eco
sport
357B
Level of Conservation
Smart Gauge: auto engage energy saving mode
5 min
low
5 miles
30 min
high
30 miles
357C
Advance Warning
Victoria
MPG
83
75°F
00001.3mi
D
H2
kW
0
10
20
30
40
50
60
70
80
90
100

FIG. D22

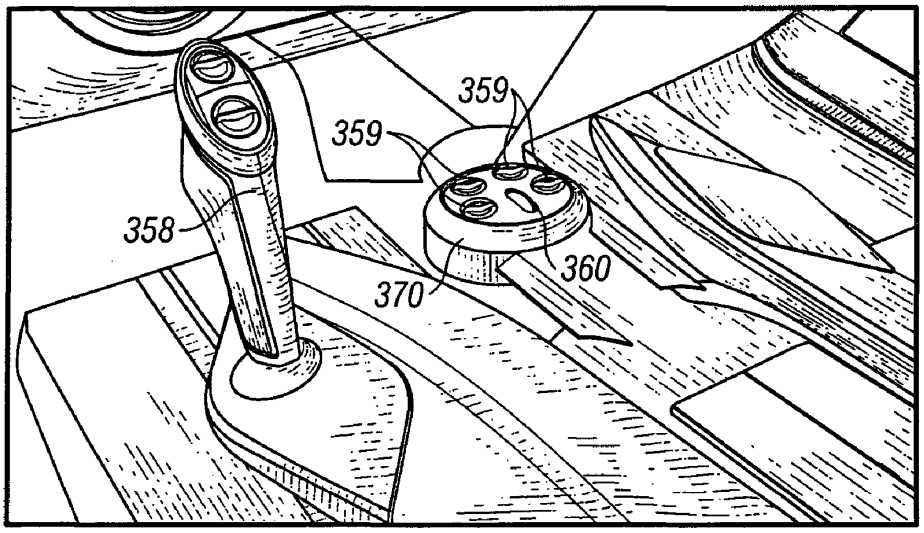

FIG. D23

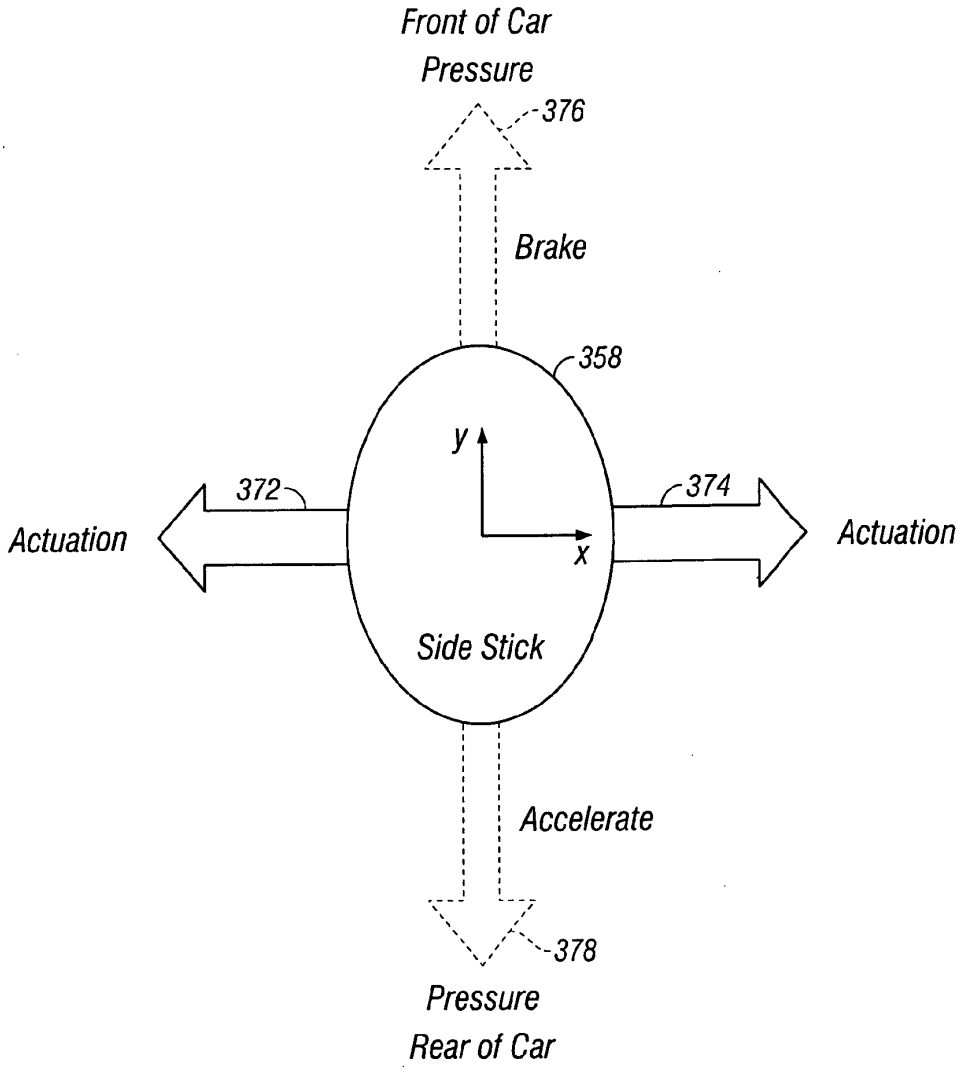
Front of Car
Pressure
376
Brake
358
y
372
374
Actuation
x
Actuation
Side Stick
Accelerate
378
Pressure
Rear of Car

FIG. D24

BUTTON	MENU	SUBMENU
ENTERTAINMENT (NOTE: WHEN THIS BUTTON IS PRESSED, THE ACTIVE MUSIC SOURCE IS AUTOMATICALLY ACTIVATED. E.G., IF THE DRIVER IS LISTENING TO AN MP3, THEN THE MP3 MENU IS HIGHLIGHTED WHEN THE ENTERTAINMENT BUTTON IS PRESSED.)	1 RADIO	1 SCAN/SEEK 2 TUNE 3 PRESETS 4 FM/AM 5 TRAFFIC INFO
	2 CD	1 REW/FF 2 SKIP TRACK 3 SKIP DISC
	3 MP3	1 REW/FF 2 SKIP TRACK 3 SKIP MP3
	4 AMPLIFIER SETTINGS	1 TREBLE 2 BASS 3 BALANCE 4 FADER
CLIMATE	1 FAN SPEED 2 TEMPERATURE 3 POSITION 4 RECIRCULATION 5 HEATED WINDSHIELD 6 HEATED REAR SCREEN	1 HEAD 2 BODY 3 FEET
NAVIGATION	1 DESTINATION	1 NEW 2 STORED 3 HOME 4 FUEL STATION
	2 STORE	
	3 ETA	1 MPG
	4 TRIP	2 RANGE 3 TRIP RESET 4 AVERAGE SPEED
	5 SETTINGS	1 DIRECT/SCENIC 2 MILES/KILOMETERS 3 VOLUME
SETTINGS	1 RIDE	1 AUTO 2 MANUAL HEIGHT ADJUSTMENT 3 RIDE CHARACTER
	2 GUIDE (ONLINE MANUAL)	
	3 IDENTITY	1 SET VOICE PRINT IDENTIFICATION 2 SET LOST KEY PASSCODE 3 SET INSURANCE DETAILS 4 DISPLAY THEME 5 SOUND THEME
	3 DIAGNOSTICS	1 RULES 2 HOSTS
	2 INTERVENTION	1 LEVEL OF INTERVENTION 2 INCOMING CALL HANDLING 3 EMAIL HANDLING 4 ACCIDENT RESPONSE
	5 PLUG-INS	1 PLUG-IN SELECT 2 ADD 3 REMOVE
	6 ENERGY	1 LEVEL OF CONSERVATION 2 SMART GAUGE ON/OFF 3 SMART GAUGE WARNING SETTING

FIG. D25

Step	Driver Action	Result
1 DX1	Press "Climate" Button	This Action Causes the Climate Settings Screen to Appear on the Lower Half of the Screen
2 DX2	Rotate Jog Wheel One Notch Forward	This Action Highlights the Temperature Adjustment Bar from the List of Other Climate Control Settings
3 DX3	Press the Jog Wheel	This Action Selects the Temperature Adjustment Bar
4 DX4	Rotate the Jog Wheel Back	This Action Raises and Lowers the Climate Control Temperature
5a DX5a	Finished	If the Driver does Nothing else, the Temperature Setting will be Recorded and After a Short Time the Climate Setting Screen will be Turned Off Automatically
5b DX5b	Press the "Climate" Button	This Action Makes the Climate Setting Screen Disappear Immediately with the New Setting Recorded
5c DX5c	Press the Jog Wheel	This Action Deselects the Temperature Adjustment Bar (with the Temperature Change Recorded) So that the Driver can Select Another Climate Control Setting to Adjust (e.g., Fan Speed, etc.)

FIG. D26

ADVANCED COMPOSITE HYBRID-ELECTRIC VEHICLE

[0001] This application claims the benefit of U.S. Provisional Applications Nos. 60/345,638, filed Jan. 8, 2002 and 60/350,015, filed Jan. 23, 2002, which are herein incorporated by reference in their entirety.

BACKGROUND

[0002] 1. Field of the Invention

[0003] The present invention relates generally to hybrid-electric vehicles, and, more particularly, to hybrid-electric vehicles incorporating lightweight advanced composite structures, modular rear suspension and traction motor units, fuel-cell hybrid-electric powertrains, integrated electromagnetic and pneumatic suspension systems, and/or a digital network-based control system and information management architecture that uses a fault tolerant ring main power supply.

[0004] 2. Background of the Invention

[0005] The strategic, business, and social need for fuel-efficient and clean vehicles is evident worldwide. In developing countries where there is accelerating growth and sales of automobiles, policymakers have an opportunity to direct this growth toward clean and efficient vehicles. In industrialized countries, consumers and policymakers are beginning to demand or require high environmental performance without compromising safety, amenity, driving performance, or cost. Globally, the transportation sector's seemingly insatiable thirst for petroleum compromises national security by creating strong petroleum dependencies on unstable regions. The United States, for instance, imports 53% of its petroleum and Europe imports 76%, making them heavily dependent on petroleum exported from the politically volatile Middle East.

[0006] The same dynamic is emerging in developing countries. China, for instance, currently imports 30% of its petroleum, but with vehicle sales growing 10% per year, by 2010 this figure is expected to climb to 50%. Thus, China is rapidly heading the same direction as North America and Europe by becoming heavily dependent on unstable regions of the world for a key input to its economy.

[0007] Recognizing this need, the global auto industry has made advances in developing cleaner engines, improving driveline efficiency, and lightweighting. The industry increasingly uses high-strength steel, aluminum, magnesium, plastics, and composites, all to varying degrees, to achieve modest weight savings. Nevertheless, much more technical progress is required in order to improve fuel economy significantly and reduce emissions fleet-wide. Currently, automakers are focusing development on hybrid-electric and fuel cell drive systems. Additional changes will be required to the entire vehicle platform to make these advanced drive systems cost competitive with conventional drive systems in the near- and mid-term.

SUMMARY OF THE INVENTION

[0008] Recognizing the weight, range, performance, size, and cost challenges associated with fuel-cell and hybrid propulsion systems, the present invention provides a hybrid-electric vehicle that incorporates one or more of lightweight, advanced composite structures, modular rear suspension and traction motor units, fuel-cell hybrid-electric powertrains, integrated electromagnetic and pneumatic suspension systems, and a digital network-based control system and information management architecture that uses a fault tolerant ring main power supply.

BRIEF DESCRIPTION OF THE DRAWINGS

[0009] The accompanying drawings, which are included to provide a further understanding of the invention and are incorporated in and constitute a part of this specification, illustrate embodiments of the invention and together with the description server to explain the principles of the invention. In the drawings:

[0010] **FIG. 1** is a schematic diagram that illustrates an exemplary advanced composite lightweight vehicle design, according to an embodiment of the present invention.

[0011] **FIG. 2** is a schematic diagram that shows an isometric view of the exemplary body structure of **FIG. 1**.

[0012] **FIG. 3** is a schematic diagram of an exploded isometric view of an advanced composite safety cell, according to an embodiment of the present invention.

[0013] **FIG. 4** is a graphical flowchart illustrating a preferred assembly sequence for the exemplary vehicle body structure of **FIG. 1**, according to an embodiment of the present invention.

[0014] FIGS. **4A-4N** are schematic diagrams that illustrate the steps of **FIG. 4** in more detail and on individual sheets.

[0015] **FIG. 5** is a schematic diagram of a subframe according to an embodiment of the present invention.

[0016] **FIG. 6** is a schematic diagram of a front crush structure according to an embodiment of the present invention.

[0017] **FIG. 7** is a schematic diagram of a screen surround according to an embodiment of the present invention.

[0018] **FIG. 8A** is a schematic diagram of a bodyside according an embodiment of the present invention.

[0019] **FIG. 8B** is a schematic diagram that illustrates the side view-of a left bodyside, according to an embodiment of the present invention.

[0020] **FIG. 8C** is a schematic diagram that illustrates a plan view of the left bodyside of **FIG. 8B**.

[0021] **FIG. 8D** is a schematic diagram that illustrates a cross-sectional view of the bodyside of **FIG. 8B** along line A-A, showing a detail of a joint between a B-pillar of the bodyside and a B-frame.

[0022] **FIG. 8E** is a schematic diagram that illustrates a cross-sectional view of the bodyside of **FIG. 8B** along line B-B, showing how the bodyside joins with a front bulkhead lower.

[0023] **FIG. 8F** is a schematic diagram that illustrates a cross-sectional view of the bodyside of **FIG. 8B** along line C-C, showing how the bodyside joins with a floor.

[0024] **FIG. 8G** is a schematic diagram that illustrates a cross-sectional view of the bodyside of **FIG. 8B** along line D-D, showing how the bodyside joins with a tailgate ring-frame.

[0025] **FIG. 8H** is a schematic diagram that illustrates a cross-sectional view of the bodyside of **FIG. 8B** along line E-E, showing a joint between the bodyside and a roof.

[0026] **FIG. 8I** is a schematic diagram that illustrates a cross-sectional view of the bodyside of **FIG. 8B** along line F-F, showing how the bodyside and a screen surround are joined.

[0027] **FIG. 8J** is a schematic diagram that illustrates a cross-sectional view of the bodyside of **FIG. 8B** along line G-G.

[0028] **FIG. 9** is a schematic diagram that illustrates a floor component according to an embodiment of the present invention.

[0029] **FIG. 10** is a schematic diagram that illustrates a firewall upper according to an embodiment of the present invention.

[0030] **FIG. 11A** is a schematic diagram that illustrates a firewall lower according to an embodiment of the present invention.

[0031] **FIG. 11B** is a schematic diagram illustrating an exemplary fabrication design of the firewall lower of **FIG. 11A**, according to an embodiment of the present invention.

[0032] **FIG. 12** is a schematic diagram of a roof according to an embodiment of the present invention.

[0033] **FIG. 13** is a schematic diagram of a B-frame according to an embodiment of the present invention.

[0034] **FIG. 14** is a schematic diagram of a C-frame according to an embodiment of the present invention.

[0035] **FIG. 15** is a schematic diagram of a tailgate ringframe according to an embodiment of the present invention.

[0036] **FIG. 16** is a schematic diagram of a bodyside wedge according to an embodiment of the present invention.

[0037] **FIG. 17** is a schematic diagram of a rear floor according to an embodiment of the present invention.

[0038] **FIG. 18** is a schematic diagram of an exploded view of an exemplary exterior skin applied to the vehicle body structure of **FIG. 1**, according to an embodiment of the present invention.

[0039] **FIG. 19** is a schematic diagram that illustrates the assembly and design of an exemplary closure for the vehicle body structure of **FIG. 1**, according to an embodiment of the present invention.

[0040] **FIG. 20** is a table comparing the design features of the present invention to conventional approaches.

[0041] **FIG. 21** is a schematic diagram that illustrates a vehicle dynamics system according to an embodiment of the present invention.

[0042] **FIG. 22** is a schematic diagram of an exemplary electrically actuated steering system according to an embodiment of the present invention.

[0043] **FIG. 23** is a schematic diagram of an electrically actuated caliper and carbon/carbon rotor and pads, according to an embodiment of the present invention.

[0044] **FIG. 24** is a schematic diagram of an exemplary rear left brake sub-assembly, according to an embodiment of the present invention.

[0045] **FIG. 25** is a schematic diagram of an exemplary front brake assembly, according to an embodiment of the present invention.

[0046] **FIG. 26** is a schematic diagram of an electrically actuated braking system, according to an embodiment of the present invention.

[0047] **FIGS. 27A and 27B** are schematic diagrams of electromagnetic/pneumatic struts as applied to both a front (left) suspension assembly and a rear (right) suspension assembly, respectively, according to an embodiment of the present invention.

[0048] **FIG. 28** is a schematic diagram that shows electromagnetic/pneumatic struts in relation to other suspension components and a subframe, according to an embodiment of the present invention.

[0049] **FIG. 29** is a schematic diagram showing an exemplary pneumatic/hydraulic system for a suspension system, according to an embodiment of the present invention.

[0050] **FIG. 30** is a flowchart describing an exemplary control scheme for a suspension system, according to an embodiment of the present invention.

[0051] **FIGS. 31A and 31B** are schematic diagrams that illustrate a carbon-reinforced composite A-arm, according to an embodiment of the present invention.

[0052] **FIGS. 32A and 32B** are finite element models of the A-arm shown in **FIGS. 31A and 31B**, according to an embodiment of the present invention.

[0053] **FIG. 33** is a schematic diagram of an exemplary integrated rear suspension module, according to an embodiment of the present invention.

[0054] **FIG. 34A** is a schematic diagram of a cross-section of a composite trailing arm, according to an embodiment of the present invention.

[0055] **FIG. 34B** is a schematic diagram of a top view of the composite trailing arm shown in **FIG. 34A**.

[0056] **FIG. 34C** is a schematic diagram of a side view of the composite trailing arm shown in **FIG. 34A**.

[0057] **FIGS. 35A and 35B** are finite element models of the composite trailing arm shown in **FIGS. 34A, 34B**, and **34**C, according to an embodiment of the present invention.

[0058] **FIG. 36** is a schematic diagram that illustrates rear suspension modules mounted to rear wheels of a vehicle, according to an embodiment of the present invention.

[0059] FIG. CR**1** is a schematic diagram that illustrates the layout of the major propulsion components of an exemplary powertrain system, according to an embodiment of the present invention.

[0060] FIG. CR**2**A is a schematic diagram of a top view of the powertrain system of FIG. CR**1**.

[0061] FIG. CR**2**B is a schematic diagram of a side view of the powertrain system of FIG. CR**1**.

[0062] FIG. CR2C is a schematic diagram of a front view of the powertrain system of FIG. CR1.

[0063] FIG. CR3 is an electrical schematic diagram of the exemplary powertrain system of FIG. CR1.

[0064] FIG. CR4 is a table describing an exemplary power management system, according to an embodiment of the present invention.

[0065] FIG. CR5 is a table that describes an exemplary propulsion control strategy for the powertrain components of FIGS. CR1 and CR2, according to an embodiment of the present invention.

[0066] FIG. CR6 is a schematic diagram of an exemplary coolant design system, according to an embodiment of the present invention.

[0067] FIG. D1 is a schematic diagram of an exemplary ring main power supply, according to an embodiment of the present invention.

[0068] FIG. D2 is a schematic diagram an exemplary dual-fused junction box, according to an embodiment of the present invention.

[0069] FIG. D3 is a schematic diagram that illustrates exemplary connections between the vehicle safety systems of the power distribution network of FIG. D1, according to an embodiment of the present invention.

[0070] FIG. D4 is a schematic diagram showing exemplary hard-wired inputs to the central controller of FIG. D1, according to an embodiment of the present invention.

[0071] FIG. D5 is a schematic diagram showing body controller wiring to the central controller of FIG. D1, according to an embodiment of the present invention.

[0072] FIG. D6 is a schematic diagram showing exemplary controller area network wiring, according to an embodiment of the present invention.

[0073] FIG. D7 is a schematic diagram of exemplary fault tolerant network wiring, according to an embodiment of the present invention.

[0074] FIG. D8 is a schematic diagram of exemplary telematics control wiring, according to an embodiment of the present invention.

[0075] FIG. D9 is a schematic diagram of exemplary audio amplifier wiring, according to an embodiment of the present invention.

[0076] FIG. D10 is a schematic diagram of an overall controller and network architecture, according to an embodiment of the present invention.

[0077] FIG. D11 is a schematic diagram of an exemplary user interface, according to an embodiment of the present invention.

[0078] FIG. D12 is a schematic diagram of an exemplary driver's display screen, according to an embodiment of the present invention.

[0079] FIG. D13 is a schematic diagram of an exemplary entertainment display screen, according to an embodiment of the present invention.

[0080] FIG. D14 is a schematic diagram of an exemplary navigation display screen according to an embodiment of the present invention.

[0081] FIG. D15 is a schematic diagram of an exemplary climate control display screen according to an embodiment of the present invention.

[0082] FIG. D16 is a schematic diagram of an exemplary ride setting display screen according to an embodiment of the present invention.

[0083] FIG. D17 is a schematic diagram of an exemplary guide display screen according to an embodiment of the present invention.

[0084] FIG. D18 is a schematic diagram of an exemplary identity setting display screen according to an embodiment of the present invention.

[0085] FIG. D19 is a schematic diagram of an exemplary diagnostics setting display screen according to an embodiment of the present invention.

[0086] FIG. D20 is a schematic diagram of schematic of an exemplary intervention settings display screen according to an embodiment of the present invention.

[0087] FIG. D21 is a schematic diagram of an exemplary plug-ins setting control panel according to an embodiment of the present invention.

[0088] FIG. D22 is a schematic diagram of an exemplary energy settings control panel according to an embodiment of the present invention.

[0089] FIG. D23 is a schematic diagram of an exemplary side stick and control pad, according to an embodiment of the present invention.

[0090] FIG. D24 is a schematic diagram of an exemplary method for actuation of a side stick, according to an embodiment of the present invention.

[0091] FIG. D25 is a table that describes an exemplary jog-wheel control, according to an embodiment of the present invention.

[0092] FIG. D26 is a flowchart that describes an exemplary process-for using a jog-wheel, according to an embodiment of the present invention.

DETAILED DESCRIPTION OF THE INVENTION

[0093] Reference will now be made in detail to the preferred embodiments of the present invention, examples of which are illustrated in the accompanying drawings.

[0094] Integrated Design and Manufacturing Approach for Affordable Volume Production of Advanced Composite Automotive Structures

[0095] An aspect of the present invention provides an integrated design and manufacturing approach for affordable volume production of advanced composite automotive structures. This design and manufacturing approach can be applied to a full-size, but lightweight, automobile design to yield a highly efficient and affordable hybrid-electric automobile for general-purpose use. The approach greatly simplifies component design to minimize hard point integration, local complexity, and embedded details, while maximizing

and taking advantage of global complexity, tailored load paths, self-fixturing and detoleranced assembly, and parts reduction. The interdependent production process involves the unique application of existing technologies to create preforms for subsequent part forming in a highly automated and repeatable manner consistent with volume production of 50,000 completed body structures per annum.

[0096] The design approach of this aspect of the present invention can be used for automobiles in general, and passenger style and sport utility style vehicles specifically.

[0097] An embodiment of the invention incorporates a process for continuous, tailored lamination of aligned composite materials in such a way that either pre-formed or pre-consolidated sheets are made available for subsequent infusion molding or stamping processes respectively. The infusion processes are similar to those already in widespread use such as resin transfer molding (RTM) or vacuum assisted resin transfer molding (VARTM). The stamping process is similar to that currently used to stamp steel automotive structures. These processes are described in more detail in the related co-pending application Ser. No. 09/916,254, filed Jul. 30, 2001, which is herein incorporated by reference in its entirety.

[0098] For either approach, liquid infusion or solid state stamping respectively, component design must be tailored to the processes to have the best chance of achieving performance and cost goals. The processing aspect of this embodiment of the invention incorporates aspects of several available technologies including fiber or tape placement, stretch-broken and commingled fiber yarns, binderized pre-forming, heated consolidation, and NC cutting and kitting, and can be used with either thermoplastic or thermoset matrix resins.

[0099] This aspect of the invention addresses the design and production of affordable advanced composite automotive structures using repeatable, monitorable, and production-friendly approaches and processes. The design approach is tailored specifically to provide a lowest fabrication cost solution, not necessarily the lightest weight solution. The processing approach is tailored specifically to provide repeatable, monitorable, and versatile production of engineered performs to provide affordable production of 50,000 units per year.

[0100] To date, no design or production solutions for advanced composite structures have been successful at production volumes higher than 5,000-10,000 units per year. For the most part, none of the solutions has attempted to incorporate a design approach that focuses primarily on cost reduction, as opposed to weight reduction. Moreover, none have attempted to integrate the fabrication processes of the present invention, which focus on repeatable, monitorable low cost and low labor content approaches.

[0101] Advanced composites are defined herein as highly aligned reinforcements of carbon, glass, or aramid fibers in a suitable polymer matrix of either thermoset or thermoplastic resins. The use of such highly aligned reinforcements is based on the following perception: The modulus of steel is 30,000,000 lbs/in^2, whereas the modulus of aluminum is 10,000,000 lbs/in^2. The modulus of a typical, higher quality glass epoxy prepreg is around 4,000,000 lbs/in^2. The composite materials currently being used by the automotive industry have even less stiffness than this and therefore do not offer the potential for dramatic improvements in structural performance.

[0102] Thus, the invention recognizes that, to benefit from the advantages of using composites in automobiles, the unique characteristics of composites must be incorporated into both the design and the production of the vehicle in a way that allows their inherent advantages to be realized, while avoiding long process cycle times and high labor content. This aspect of the invention therefore integrates the production demands of higher volume automotive structures with the higher performance available from advanced composite materials, in a way that yields repeatable, affordable performance.

[0103] This aspect of the invention addresses the fundamental elements required for a breakthrough in affordable high performance and high volume automotive structures to become a reality. Issues this invention successfully address are: 1) a perspective of what comprises the structure of an automobile that yields certain design freedoms that are exploited in the design and assembly approach of the components comprising that structure, 2) a simple and robust approach to bonded assembly of components, which eliminates completely the need for mechanical fasteners for general assembly, relieves the tolerance requirements of the assembled components, and provides a degree of self-fixturing that yields less costly and faster assembly, 3) elimination of the need for general repairs of the advanced composite structure under most conditions, 4) innovative use of an aluminum sub-assembly to perform functions that are not particularly amenable to advanced composites, thus eliminating the need for expensive or hard to produce composite components, 5) innovative use of unreinforced exterior skin to uncouple the shape of the exterior surface from the highly reinforced body structure, thereby enabling a more simplified and less costly design solution, 6) innovative integration of several specific design features that contribute to the overall affordability and performance of the vehicle structure including: one piece transverse ring frames, integral sills, integral seat attachments, minimal parts count, and integral thermal and acoustic insulation, 7) a production process developed specifically to minimize touch labor between part design and near-finished part, while providing highly repeatable, tailorable, versatile, and controllable processes, minimizing scrap materials, enabling in-line process monitoring and control, and yielding aligned "continuous" like fibrous reinforcement in a variety of laminate architectures using the same equipment.

[0104] In taking this approach, this aspect of the present invention provides several benefits in terms of cost, structural performance, mass, durability, and modularity/tailorability.

[0105] In terms of cost, the design approach of the present invention, coupled with the advanced composite structure manufacturing process described in the related co-pending application Ser. No. (09/916,254, incorporated herein by reference), provide an advanced composite, carbon-fiber-reinforced automotive safety cell that could be produced at attractive volumes for a reasonable cost. The design approach of the present invention therefore fulfills a desire shared by all OEMs, which would like to produce lightweight composite vehicle structures, without a cost penalty at the vehicle and production levels. Currently, the entire automotive industry acknowledges that there is no such process currently available that can affordably produce composite vehicle structures at volumes greater than 10-20

k per year. Production cost based on the design and manufacturing approach of the present invention is estimated to be dramatically lower than any known carbon reinforced automotive structural solution, and competitive at the vehicle level with conventional design and production approaches.

[0106] The present invention also has benefits relating to structural performance. Conventional design and production of automobile structures involves stamped sheet metal components that use complex geometries to provide inherent stability. Assembly may include a range of processes such as welding, bonding, attachments, and mechanical fasteners. A typical steel body structure contains at least seventy major pressings, and the fabrication of each pressing requires numerous steps. In addition, these seventy pressings do not include closures or the assembly of any structures outside of what could be called the "safety cell." This conventional approach, while extremely low cost at high volume, yields significant structural shortcomings and breaks down economically at volumes under 100 k per year. For example, structural shortcomings include welded joints at the "corner" of the torque box formed by the roof, body sides, and floor. The corner is the worst location for a spot welded joint because the process results in a hinge effect that minimizes the bending integrity of the corner, thus compromising resistance to side impact and rollover crash situations. Conventional assembly methods are also notorious for producing a wide range of tolerance in terms of fit-up and final dimensions of the structure, and for degrading rapidly over time due to fatigue. In contrast to these conventional methods and processes, the design approach of this aspect of the present invention separates the structure from the vehicle's unreinforced exterior skin, which is styled and colored, and thereby enables shape optimization of the structural components to better suit structural integrity and low cost production.

[0107] In terms of mass, in this aspect of the present invention, the combination of the lightweight materials, the structural design approach, the use of highly automated, repeatable processes, and a fully bonded assembly approach provide a vehicle structure that meets all applicable performance requirements at a significantly lower mass than any known conventional steel or other composite material approach.

[0108] In terms of durability, in this aspect of the present invention, the considered material selections, design approach, and assembly method contribute to dramatic reductions in the ill effects of the service environment, especially in comparison to conventional approaches. In particular, in the prior art, conventional stamped and welded body structures can lose bending and torsional stiffness within a year of purchase. These parameters are directly linked with road feel, ride and handling, noise, vibration and harshness (NVH), and crash safety.

[0109] In terms of modularity/tailorability, in this aspect of the present invention, the integrated design approach to the body structure enables production of different vehicle variants at a reduced incurred cost compared to conventional approaches. The present invention is able to provide this cost-effective modularity/tailorability because the investment for production of a single variant is far less than for a conventional stamped and welded steel structure, and because the general design and assembly approach are applicable even if the geometry and size of the components are changed to accommodate different vehicle requirements.

[0110] Overall, this aspect of the present invention includes one or more of the following features: 1) fastenerless, detoleranced, and self-fixturing assembly; 2) highly aligned but discontinuous carbon fiber reinforced components; 3) a part design that is compatible with globally complex and locally simple design philosophies; 4) the use of fiber placement technology to produce tailored performs of either binderized materials or fully impregnated materials; and 5) the use of a combination of solid-state stamping or performing and resin infusion to form final component shapes from the tailored blanks.

[0111] FIGS. **1-20** illustrate an exemplary design implementing the features described above.

[0112] **FIG. 1** illustrates an exemplary advanced composite lightweight vehicle design, according to an embodiment of the present invention. For illustrative purposes, **FIG. 1** and the subsequent related figures present a particular structural configuration. However, as one of ordinary skill in the art would appreciate, the design features of the present invention are equally applicable to other specific vehicle designs. For this reason, and notwithstanding the particular benefits associated with using the present invention for the particular illustrated design, the invention described herein should be considered broadly useful for any vehicle design.

[0113] As shown from a top-level structural configuration in **FIG. 1**, the exemplary vehicle body structure X**100** includes three major structural sections, including an advanced composite safety cell X**102**, an aluminum subframe X**104**, and a front crush structure X**106**. The sectional layout of body structure X**100** is unique for an automotive structure in that each section is designed specifically to absorb the energy that it will experience in its specific portion of the impact pulse during a crash event. Composites are used in front crush structure X**106** to absorb energy in a sacrificial manner. Aluminum is used in subframe X**104** to provide the majority of energy absorption because aluminum's crush behavior is very well understood. In addition, the complex design of subframe structure X**104** is more affordable to produce out of aluminum than advanced composite. Advanced composites are used in safety cell X**102** because this area typically encompasses the majority of the mass of a conventional steel vehicle structure and therefore represents the most potential for significant mass reduction.

[0114] **FIG. 2** shows an isometric view of the exemplary body structure X**100**. As shown, advanced composite safety cell X**102** includes all structure aft of aluminum subframe X**104**. Subframe X**104** is attached to the front of safety cell X**102**. Front advanced composite crash structure X**106** is disposed forward of subframe X**104** and is attached to both subframe X**104** and also safety cell X**102**. To attach to safety cell X**102**, front crash structure X**106** includes A-pillar upper members X**107** that span subframe X**104** and attach to safety cell X**102**.

[0115] Of particular importance to the present invention is the geometry of the components in advanced composite safety cell X**102**. In a preferred embodiment of the present invention, all the components in safety cell X**102** are designed specifically to be produced by the manufacturing

process described in the related co-pending application Ser. No. (09/916,254, incorporated herein by reference), which utilizes advanced fiber placement technology to laminate "blanks" for subsequent thermoplastic stamping. In accordance with that manufacturing process and with the need to minimize production costs, the components of safety cell **X102** preferably have very gentle geometries to facilitate fast cycle time and low-cost production.

[**0116**] As an example of this geometry, an aspect of the present invention minimizes the local complexity of the components of safety cell **X102**. Thus, in a preferred embodiment, every component in safety cell **X102** is designed with no out-of-plane design features to minimize production cost.

[**0117**] Another aspect of the present invention provides integral and tailored load paths in the components of safety cell **X102**. In this manner, the load paths of safety cell **X102** use component features required for other functions, such as the cant rail portion of the roof and the sill in the floor required for side impact protection.

[**0118**] Another aspect of the present invention provides fastenerless assembly of safety cell **X102**. In a preferred embodiment, a simple blade-clevis assembly interface is used for the assembly of every component in the safety cell. This simple joint design simplifies assembly by relieving the tolerance of the assembly interface in two of three dimensions, while providing a large bond area for adhesive bonding in a balanced double lap joint configuration, which is the best joint design for durability and load carrying capacity.

[**0119**] **FIG. 3** shows an exploded isometric view of advanced composite safety cell **X102**, demonstrating the components and assembly interfaces of safety cell **X102** according to an embodiment of the present invention. As shown, safety cell **X102** includes a roof **X108**, bodysides **X220**, bodyside wedges **X112**, a tailgate ringframe **X114**, a C-frame **X116**, a B-frame **X118**, a firewall upper **X120**, a screen surround **X122**, a firewall lower **X124**, a rear floor **X126**, and a floor **X128**.

[**0120**] **FIG. 4** illustrates a preferred assembly sequence for the exemplary vehicle body structure **X100** of **FIG. 1**. As described above, vehicle body structure **X100** includes the advanced composite safety cell **X102**, the front aluminum subframe **X104**, and the front crush structure **X106**. As shown in the **FIG. 4**, the assembly sequence proceeds from top to bottom and left to right, and involves the initial separate assemblies of subframe **X104** and its associated components (steps **S1-S4**), safety cell **X102** (steps **B1-B4**), and front crush structure **X106** (**C1-C3**) and its associated components. Then, in the final assembly sequence (steps **S5** to **B5** to **B6**), subframe **X104** is attached to safety cell **X102**, and the front crush structure **X106** is then attached to safety cell **X102** and subframe **X104**. Thus, in the exemplary flowchart of **FIG. 4**, an upper step must be completed before a lower step in the same vertical chain and a left step must be completed before a step to its right in the same horizontal chain. Steps in different vertical chains can be completed in series or in parallel.

[**0121**] FIGS. **4A-4N** illustrate the steps of **FIG. 4** in more detail, on individual sheets, each marked with its corresponding step (i.e., **B1-B6**, **S1-S5**, and **C1-C3**).

[**0122**] As shown in step **S1** (**FIGS. 4 and 4**A), assembly of the subframe and its components begins with the aluminum subframe **X104**. Then, in step **S2** (**FIG. 4** and **4**B), steering links **X132** and axles **X134** and traction motors/brake assemblies **X136** are mounted on subframe **X104**. In step **S3** (**FIGS. 4 and 4**C), suspension assemblies **X138** are mounted on subframe **X104**. As shown, suspension assemblies **X138** include electromagnetic struts **X140** that attach to subframe **X104** and to aluminum upper control arm **X141**, and carbon-reinforced composite lower suspension arms **X142** that attach to subframe **X104** and to steering knuckle **X139**. Finally, in step **S4** (**FIGS. 4 and 4**D), front motor controller **X144** and 42-volt accessory battery **X146** are mounted on subframe **X104**. Having completed the assembly of subframe **X104** and its associated components, in step **S5** (**FIGS. 4 and 4**E), subframe **X104** and its associated components are ready to be attached to safety cell **X102**. First, however, safety cell **X102** must be assembled.

[**0123**] Thus, as shown in step **B1** (**FIGS. 4 and 4**F), assembly of safety cell **X102** begins by attaching B-frame **X118**, C-frame **X116**, and firewall upper **X120** to rear floor **X126**, and attaching bodysides **X110** to firewall upper **X120**, B-frame **X118**, C-frame **X116**, and rear floor **X126**. Then, in step **B2** (**FIGS. 4 and 4**G), tailgate ringframe **X114** is attached to bodysides **X100** and rear floor **X126**, and firewall lower **X124** is attached to bodysides **X100** and firewall upper **X120**. In step **B3** (**FIGS. 4 and 4**H), the components assembled to this point are then mounted on floor **X128**, attaching floor **X128** to, for example, firewall lower **X124**, bodysides **X110**, rear floor **X126**, and tailgate ringframe **X114**. In step **B4** (**FIGS. 4 and 4**I), roof **X108** and screen surround **X122** are mounted on top of the components assembled to this point. For example, as shown in **FIG. 4**, roof **X108** is attached to bodysides **X110**, B-frame **X118**, C-frame **X116**, and tailgate ringframe **X114**. Screen surround **X122** is attached to, for example, firewall lower **X124**, bodysides **X110**, and roof **X108**. Finally, in step **B5** (**FIGS. 4 and 4**J), bodyside wedges **X112** are attached to the components assembled to this point. For example, bodyside wedges **X112** are attached to bodysides **X110**, firewall upper **X120**, firewall lower **X124**, and floor **X128**. Safety cell **X102** is then ready to attach to subframe **X104** and front crush structure **X106**.

[**0124**] As shown in step **C1** (**FIGS. 4 and 4**K), the assembly of front crush structure **X106** begins by mounting coolant expansion tanks **105**, **115**, and **126** and heat exchangers **103**, **113**, and **124** on a bumper structure **X148**. In step **C2** (**FIGS. 4 and 4**L), a fluid bottle **X150** and A-pillar upper **X107** are mounted on bumper structure **X148**. In step **C3** (**FIGS. 4 and 4**M), front crush structure **X106** and its associated components are ready to attach to subframe **X104** and safety cell **X102**.

[**0125**] For the final assembly, in step **B6** (**FIGS. 4 and 4**N), subframe **X104** is attached to safety cell **X102**, and front crush structure **X106** is attached to subframe **X104** and safety cell **X102**. Subframe **X104** attaches to, for example, firewall upper **X120**, firewall lower **X124**, and floor **X128**. Front crush structure **X106** attaches to, for example, firewall upper **X120** and subframe **X132**. Assembly of the core vehicle structure is thus complete.

[**0126**] A preferred embodiment of the present invention uses blade-clevis joints to assemble the components as shown in **FIG. 4**. This type of joint enables the same

assembly joint to be used to assemble all the components, while still providing a degree of self-fixturing capability to simplify assembly.

[0127] The individual components of **FIGS. 3 and 4** will now be shown and described in more detail.

[0128] **FIG. 5** illustrates subframe X**104** according to an embodiment of the present invention. In a preferred embodiment, subframe X**104** is a welded aluminum structure, built from constant cross-section aluminum tubing to minimize production costs. Subframe X**104** houses and reacts to the loads of numerous vehicle components. In addition, subframe X**104** serves as the interface between the front suspension components and the rest of the vehicle, and provides an intermediate crush structure between the front composite crush structure X**106** and safety cell X**102**. Using aluminum, whose strength and crush behavior are very well characterized, enables a very efficient crush zone to be designed while also performing the other functions assigned to subframe X**104**. In addition, the well-known properties and performance of aluminum minimize development risks. The relatively low cost of aluminum also helps minimize production costs. Notwithstanding the benefits of aluminum, an alternative embodiment of the present invention provides a subframe X**104** made of an advanced composite.

[0129] **FIG. 6** illustrates front crush structure X**106**, according to an embodiment of the present invention. Preferably, front crush structure X**106** is made from an advanced composite. This front-most component of the vehicle structure houses heat exchangers **103**, **113**, and **124**, expansion tanks **105**, **115**, and **126**, and fluid bottle X**150**.

[0130] Front crush structure X**106** absorbs and distributes crash energy up to 15 mph. Structure X**106** absorbs this energy through its own destruction during a crash event. The design of front crush structure X**106** transfers the energy and loads that it absorbs into aluminum subframe X**104**. In particular, structure X**106** transfers loads through its A-pillar upper X**107** and to the integrated load paths of advanced composite safety cell X**102**.

[0131] **FIG. 7** illustrates screen surround X**122**, according to an embodiment of the present invention. Screen surround X**122** accommodates the windscreen (e.g., windshield) and provides the load path between A-pillar upper X**107** of front crush structure X**106** and the cant rails of the roof (described below). In a preferred embodiment, screen surround X**122** includes blades X**152** for attaching screen surround X**122** to a clevis feature around the perimeter of bodysides X**110**. Screen surround X**122** provides the upper load path between front crush structure X**106** and the upper cant rail of safety cell X**102**. Screen surround X**122** also provides transverse reinforcement for firewall upper X**120** and provides a frame for the front windscreen.

[0132] **FIG. 8A** illustrates a bodyside X**110** according an embodiment of the present invention. Bodyside X**110** is an important structural component, which integrates numerous structural and assembly features into one globally complex component, provides upper and lower crash load paths via a cant rail and sill, and contributes to torsional stiffness. Bodyside X**110** incorporates two key load paths to transfer loads from subframe X**106** in the lower portion of bodyside X**110**, and from A-pillar upper X**107** via the upper portion of bodyside X**110**. A clevis assembly interface X**154** is incorporated around the perimeter of bodyside X**110** to interface with blades formed in the components that join bodyside X**110**. In a preferred embodiment, clevis assembly interface X**154** is oriented in a vertical plane such that interfacing components can be fitted in an orthogonal fashion. A co-processed blade feature is incorporated into B-pillar X**156** and C-pillar X**158** of bodyside X**110**, which interfaces with a clevis feature of the transverse ring frames (B-frame X**118** and C-frame X**116**). In another embodiment, bodyside X**110** uses a thin foam sandwich core to enhance structural stability, while providing desirable thermal and acoustic insulation.

[0133] **FIG. 8B** illustrates the side view of a left bodyside X**110**. Sections A-A through G-G are marked and illustrated in **FIGS. 8D through 8J**. **FIG. 8C** shows a plan view of left bodyside X**110**, showing the shallow depth of draw of the part, which simplifies tooling and manufacturing difficulty.

[0134] **FIG. 8D** illustrates a detail of the joint between B-pillar X**156** of bodyside X**110** and B-frame X**118**. B-frame X**115** has a clevis joint X**283** into which blade X**281** on the inner side of B-pillar X**156** slots. Blade X**281** is made part of bodyside X**110** during its manufacture. The facing parts of the blade and clevis joints are bonded together using an adhesive.

[0135] **FIG. 8E** illustrates section B-B, showing how bodyside X**110** joins with front bulkhead lower X**124** using a blade and clevis joint. In this case, blade X**285**, which is part of front bulkhead lower X**124**, slots into clevis X**287** in bodyside X**110** and the parts are bonded together with adhesive between the blade and clevis.

[0136] **FIG. 8F** illustrates section C-C, showing how bodyside X**110** joins with floor X**128**. These parts join by slotting blade X**900** on the sill of floor X**128** into clevis X**902** on the lower edge of bodyside X**110**. Adhesive between blade X**900** and clevis X**902** bond the two parts together. This figure also shows how cooling lines for the propulsion system X**904** could be integrated into the sill.

[0137] **FIG. 8G** illustrates section D-D, showing how the back edge of bodyside X**110** joins with tailgate ringframe X**114**. In this case, blade X**906** of tailgate ringframe X**114** is a sandwich structure and slots into clevis X**908** on bodyside X**110** and adhesive between the blade and clevis bonds the parts together.

[0138] **FIG. 8H** illustrates section E-E, showing the joint between bodyside X**110** and roof X**108**. As shown, blade X**910** slots into clevis X**912** on the upper edge of bodyside X**110** and is adhesively bonded to attach the parts.

[0139] **FIG. 8I** illustrates section F-F, showing how bodyside X**110** and screen surround X**122** are joined using a blade and clevis joint. Blade X**297**, which is part of screen surround X**122**, slots into clevis X**295**, which forms the upper edge of bodyside X**110**. The joint is held together with adhesive.

[0140] **FIG. 8J** illustrates section G-G, which shows the relatively shallow profile of bodyside X**110** at this section. It also shows the joint between roof X**108** and bodyside X**110** (at point X**291**) and between bodyside X**110** and floor X**128** (at point X**293**). This figure also illustrates where rear floor X**126** joins with bodyside X**110** (at point X**289**).

[0141] **FIG. 9** illustrates floor X**128** according to an embodiment of the present invention. Floor X**128** serves as a critical component of safety cell X**102**, integrating the main front crash load paths via side sills X**160** and central crush wedges X**162**, as well as floor mounts, rear suspension interfaces, and other assembly features. In a preferred embodiment, floor X**128** includes sandwich stiffened floor sills X**163** to improve lower crash load paths. Floor X**128** significantly contributes to the overall torsional stiffness of safety cell X**102**, and provides transverse stiffness and a smooth external underbody surface. The elimination of conventional floor substructure via the use of sandwich construction contributes to excellent interior headroom with a relatively small frontal area. In a further embodiment of the present invention, air and fluid conduits are formed in floor X**128**.

[0142] **FIG. 10** illustrates firewall upper X**120** according to an embodiment of the present invention. Firewall upper X**120** provides torsional stiffness and side impact protection. In particular, firewall upper X**120** is a single integrated component that transfers loads transversely across safety cell X**102**, while providing a very stiff horizontal shear plane to reinforce safety cell X**102** against severe side impacts. In addition, firewall upper X**120** provides a solid structural backup for airbag and instrument panel attachments.

[0143] **FIG. 11A** illustrates firewall lower X**124** according to an embodiment of the present invention. Like firewall upper X**120**, this single integrated component provides a very stiff vertical shear plane that resists vehicle torsional deformation. Firewall lower X**124** also provides transverse stiffness to resist side impact loads. In addition, firewall lower X**124** provides a stiff interface to the aluminum subframe X**104**.

[0144] **FIG. 11B** illustrates an exemplary fabrication design of firewall lower X**124**, according to an embodiment of the present invention. The design incorporates the joint details, fabrication details, and materials as shown in **FIG. 11B**.

[0145] **FIG. 12** illustrates roof X**108** according to an embodiment of the present invention. Roof X**108** provides safety cell X**102** with a key horizontal shear plane and integrates an upper crash load path into cant rails X**164**. Cant rails X**164** and screen surround X**122** provide the upper crash load path. Roof X**128** also includes blade assembly interfaces (not shown) that mate with transverse frames X**116** and X**118**. In addition, roof X**108** provides vehicle body structure X**100** with an aerodynamic exterior surface.

[0146] **FIG. 13** illustrates B-frame X**118** according to an embodiment of the present invention. B-frame X**118** attaches to the B-pillars X**156** of bodysides X**110** and to rear floor X**126** and roof X**108**. Preferably, B-frame X**118** is bonded to bodysides X**110** using a blade/clevis assembly joint. In this position, B-frame X**118** provides safety cell X**102** with a continuity of flexural stiffness in the corner of safety cell X**102**. This flexural stiffness significantly improves rollover and side impact protection and torsional rigidity, especially in comparison to conventional spot-welded, stamped steel structures, which typically suffer from a lack of flexural stiffness.

[0147] **FIG. 14** illustrates C-frame X**116** according to an embodiment of the present invention. C-frame X**116** attaches to the C-pillars X**158** of bodysides X**110** and to rear floor X**126** and roof X**108**. Like B-frame X**118**, C-frame X**116** provides safety cell X**102** with a continuity of flexural stiffness in the corner of safety cell X**102**, which significantly improves rollover and side impact protection.

[0148] **FIG. 15** illustrates tailgate ringframe X**114** according to an embodiment of the present invention. As shown, tailgate ringframe X**114** integrates a number of functions such as a rear transverse frame, a rear crush structure attachment, door seal interfaces, and door hinge and actuation interfaces.

[0149] **FIG. 16** illustrates a bodyside wedge X**112** according to an embodiment of the present invention. Bodyside wedge X**112** performs a number of functions contributing to the overall impression of quality of the vehicle and the side impact safety performance of the vehicle. In particular, wedge X**112** provides a desirable hinge attach geometry that promotes a quality door slam and seal. Wedge X**112** also provides a layer of crush capability to absorb side impact energy in crash situations, and further protect safety cell X**102** from damage at federally mandated requirements.

[0150] **FIG. 17** illustrates a rear floor X**126** according to an embodiment of the present invention. Rear floor X**126** accommodates a number of functions and components. For example, rear floor X**126** provides a base for rear seat supports, covers the hydrogen storage tanks, provides an attachment for a rear component access cover, and provides stability for the rear crash load paths.

[0151] **FIG. 18** illustrates an exploded view of an exemplary exterior skin X**165** applied to the vehicle body structure X**100** of **FIG. 1**, according to an embodiment of the present invention. As shown, exterior skin X**165** includes a front bumper panel X**166**, front quarter panels X**168**, a hood panel X**170**, bottom sill panels X**172**, door panels X**174**, rear bumper panel X**176**, rear quarter panels X**178**, roof rail panels X**180**, and rear door panel X**182**. In a preferred embodiment, exterior skin X**165** is non-structural and is made of an unreinforced thermoplastic material. In this manner, exterior skin X**165** provides an aerodynamic surface, enables a variety of coloring and styling, provides inherent dent resistance, and affords a degree of customer tailorability by enabling replacement of individual panels or all of the panels to affect the style or theme of the vehicle. By using a core structure surrounded by a non-structural skin, the present invention separates the structure components of the vehicle from its external geometry. In doing so, the vehicle structure can be optimized for low cost, without having to conform to and perform as the external surface of the vehicle. Moreover, the non-structural external skin can be optimized for low cost, for dent resistance, and for providing color and finish without the use of conventional painting and its associated cost and environmental impacts. This approach also enables a degree of customer tailorability that can be an attractive selling feature for vehicles utilizing this structural design approach.

[0152] **FIG. 19** illustrates the assembly and design of an exemplary closure X**184** for vehicle body structure X**100**, according to an embodiment of the present invention. Although illustrated as a front left door, one of ordinary skill in the art would appreciate that the illustrated design is applicable to any closure, such as a rear passenger side door or a rear hatch. As shown in **FIG. 19**, closure X**184** includes

a door inner panel X**186**, an integrated side intrusion beam X**188**, energy absorbing foam inserts X**190**, a hardware cassette X**192**, and an exterior skin panel X**194**.

[**0153**] Door inner panel X**186** serves as the main structure of closure X**184**, providing the necessary stiffness. In addition, door inner panel X**186** serves as an interior trim surface on which padding can be added where required, for example, to meet U.S. Federal Motor Vehicle Safety Standards. Door inner panel X**186** can also incorporate armrests for controls. A door pocket X**187** can be formed by adding a front piece to door inner panel X**186**.

[**0154**] Integrated side intrusion beam X**188** is disposed inside door inner panel X**186** and provides further rigidity and protection against side impacts. Notably, beam X**188** is located on the exterior side of door inner panel X**186**.

[**0155**] Energy absorbing foam inserts X**190** are also disposed inside door inner panel X**186**, on the exterior side of panel X**186**. Foam inserts X**190** absorb energy in side impact situations. Foam inserts X**190** also provide vibration and noise reduction.

[**0156**] Hardware cassette X**192** is disposed inside door inner panel X**186**, within an opening penetrating panel X**186**. Hardware cassette X**192** can accommodate various door mechanisms, such as hinges, latches, and window mechanisms.

[**0157**] Exterior skin panel X**194** covers inner door panel X**186** and the components within panel X**186**. Exterior skin panel X**194** is preferably self-colored, easily removable, damage tolerant, and swaged for stability.

[**0158**] As shown in **FIG. 19**, the design and assembly approach for closure X**184** is the opposite of a conventional automobile. In the present invention, the structural portion of closure X**184** is on the inside (inner door panel X**186**), and the intrusion beam X**188** and non-structural skin (X**194**) are on the outside. This configuration enables door inner panel X**186** to double as a trimmed interior surface, by allowing the untrimmed carbon composite surface to show through to the interior of the vehicle. This dual design therefore saves cost and weight. In addition, because the inner panel X**186** provides the structure, the outer skin X**194** can be unreinforced, allowing ease of replacement, tailoring, or access for service or repair of the door interior.

[**0159**] The advanced composite design of the vehicle body structure X**100** described above provides several advantages over conventional steel automotive structure technology. The table of **FIG. 20** describes some of these advantages. As shown, the present invention reduces weight, minimizes fabrication and assembly costs, eliminates conventional painting, and provides a safe and durable vehicle structure. As an example of weight savings, an overall vehicle structural mass can be reduced from 330 kg for a conventional automobile to 187 kg for an advanced composite vehicle structure according to the present invention, which represents a weight savings of approximately 57%.

[**0160**] Lightweight and Tailorable Vehicle Dynamics System with Optimizations for Lightweight and Hybrid-Electric Automobiles

[**0161**] An aspect of the present invention provides a lightweight and tailorable vehicle dynamics system with optimizations for lightweight and hybrid-electric automobiles. This aspect of the present invention performs in a synergistic manner with a full sized but lightweight automobile design to efficiently and cost-effectively provide consistent performance over a broad range of vehicle payload and driving conditions. The dynamics system emphasizes digital information management and control, advanced materials, and modular design that contributes directly to its value as a stand-alone system of an automobile, and its value in the context of enabling the desired performance of the entire vehicle.

[**0162**] As represented in **FIG. 21**, the vehicle dynamics system X**200** according to this aspect of the present invention includes one or more of the following elements: 1) a lightweight, affordable electrically actuated steering system X**201**; 2) an electrically actuated lightweight durable braking system X**202**; 3) an integrated electromagnetic/pneumatic suspension system X**204**; 4) lightweight composite suspension components X**206**; 5) modular rear suspension and traction motor units X**208**; and 6) an active tire contact patch control system X**210**. Each of these elements is controlled by a vehicle information management and control system with an integrated dynamics controller X**212**. These elements are described in more detail below under corresponding subheadings.

[**0163**] Based on the elements shown in **FIG. 21**, this aspect of the invention provides semi-active independent suspension at each corner of the vehicle, electrically-actuated carbon-based disc brakes, modular rear corner drivetrain hardware and suspension, and electrically actuated and controlled steering. The invention includes one or more of energy-efficient active ride height, attitude, roll stiffness, and damping control, active tire contact patch monitoring and control, and lightweight, high-performance braking. Components are fabricated from materials that meet the system and lifecycle requirements.

[**0164**] The vehicle dynamics system of the present invention provides benefits in the areas of vehicle dynamics, mass, durability, and modularity or tailorability.

[**0165**] In terms of vehicle dynamics, the present invention meets the challenge of achieving desirable ride, handling, and stability of a full size vehicle with very low mass. Vehicle dynamics are very sensitive to the ratio of sprung mass to unsprung mass, amount and position of the payload, and the components, and their configuration and function applied in the suspension at each corner of the vehicle. The dynamics system of the present invention deals with this challenge in a way that overcomes many historical shortcomings of lightweight vehicle design.

[**0166**] In terms of mass, the combination of the materials used, the design and selection of the components, innovative use of digital control, and low overall vehicle mass contribute to a significant reduction in the mass of the dynamics system of the present invention, especially in comparison to the dynamics system of a conventional and equivalently sized automobile. The design of the present invention also eliminates some minor components, while permitting the use of certain lightweight components that would not otherwise be appropriate for application outside of vehicles driven by professional drivers.

[**0167**] In terms of durability, based on considered material selections and the exploitation of digital electronics, the

present invention provides a dynamics system that can surpass the lifetime of the dynamics system of a conventional and equivalently sized automobile.

[0168] In providing modularity/tailorability, the integrated design approach to the rear corners and the use of digital electronics throughout the system of the present invention provide a high degree of inherent modularity and tailorability, which is currently not practical in conventional equivalently sized automobiles.

[0169] With these benefits in mind, the vehicle dynamics system of this aspect of the present invention includes one or more of the following features:

[0170] The use of advanced composites in the suspension components to reduce their mass and enable beneficial structural integration without compromising affordability or durability;

[0171] The application and integration of semi-active pneumatic springs and active electromagnetic damping as suspension struts to accommodate a high curb-to-gross vehicle mass ratio, variation in the position of the payload's center of gravity, while reducing the compromises in handling vs. ride/comfort typical of conventional systems, permitting control of ride height and active damping with minimized energy consumption, and expanding capability for negotiating rough terrain;

[0172] The incorporation of semi-active pneumatic anti-roll control to permit adjustment of roll stiffness in response to changes in payload or gross vehicle mass, vehicle speed, roughness of terrain, and driver-selectable preferences;

[0173] The replacement of a conventional steering rack with a bell-crank steering linkage, dual electric steering motors, and digital by-wire control;

[0174] The integration of the rear suspension component with the structural mounting and casing for electric traction motors, transmission (constant-mesh reduction gears), knuckle, bearing, and spindle or hub;

[0175] The use of electrically actuated calipers with carbon/carbon brake pads and rotors to accommodate the unique material and braking characteristics of the carbon/carbon materials, thereby reducing mass, providing exceptional performance, and making carbon-carbon pads and rotors feasible in consumer and commercial automotive products by presenting a consistent and predictable relationship between driver input and deceleration of the vehicle;

[0176] The use of active tire pressure monitoring and control to manage contact patch quality and thus, to a large degree, the vehicle's ride, handling, and stability in a wide range of environmental conditions and varying driver competence; and

[0177] The integrated control and coordination of suspension, to collectively provide dynamic stability control in response to either destabilization by external forces (aerodynamic or road surface inputs) or in attempting to best realize driver intentions in the context of traction-limiting road surfaces or limits of vehicle capability in extreme maneuvers.

[0178] To illustrate the interaction of the system elements of **FIG. 21**, this specification describes below three operational scenarios of the integrated vehicle dynamics system X**200**: 1) adjustment of suspension, steering, and brakes for a change in payload mass and distribution; 2) absorption of a bump on the outside edge of a turn while cornering at highway speeds on an otherwise smooth surface; and 3) stability control in response to a transient cross-wind gust or extreme evasive driver input.

[0179] 1) Adjustment of suspension, steering, and brakes for a change in payload mass and distribution:

[0180] As additional passengers or payload are added to the vehicle of **FIG. 21**, position transducers in the electromagnetic suspension arms (the dampers) X**204** at each corner of the vehicle detect a change from a current setting of static vehicle ride height. In response to this sensor input, controller X**212** adds air pressure to both the pneumatic springs and the pneumatic anti-roll links of the electromagnetic/pneumatic suspension system X**204**. The default stiffness of the electromagnetic dampers is also adjusted accordingly. This adjustment maintains consistent ride height, spring-rate natural frequency, and default stiffness for anti-roll and dampers.

[0181] These component subsystems would, at the same time, be optimized for mass distribution. If, for example, all payload were added at the right rear corner, the rear springs would be adjusted more than the front, and the right rear even more still, until the vehicle height at each of the four corners is returned to what it was when the vehicle last came to rest (e.g., allowing for one or more wheels to be on a raised or depressed feature of the terrain). Additionally, the default stiffness for the rear anti-roll link and dampers would be adjusted more than the front to maintain designed under/over-steer characteristics, regardless of any subsequent dynamic actuation of chassis systems to further enhance vehicle stability.

[0182] Controller X**212** would also use the data from the suspension position transducers of electromagnetic/pneumatic system X**204** to calculate the change in overall vehicle mass from its curb mass (unladen state). Based on this calculation, controller X**212** would then adjust the degree of electrical steering "assist" provided by steering system X**201** to give the driver consistent steering feel and effort, regardless of changes in payload. Notably, this electrical steering "assist" would only be simulated by steering system X**201**, since there is no physical linkage between the steering wheel or other input device and the steering actuators. Responsiveness to steering effort could also be varied according to vehicle speed, for example, to facilitate parking maneuvers or to effectively dampen driver input at higher speeds to enhance stability.

[0183] As part of this operational scenario, braking system X**202**, as controlled by controller X**212**, automatically compensates for overall vehicle mass along with brake temperature, moisture content, and other factors, simply by providing the brake caliper force required to consistently match driver inputs to a corresponding factory-specified vehicle deceleration. However, the data regarding distribution of payload mass is also used to adjust the proportioning of

brake actuation, thus matching brake torque distribution to relative traction at each wheel. (This is the base distribution before activation of continuously-variable dynamic torque control at each corner to prevent wheel lock-up.)

[**0184**] 2) Absorption of a bump on the outside edge of a turn while cornering at highway speeds on an otherwise smooth surface:

[**0185**] As highway speeds (e.g., greater than 50 mph) are approached, controller **X212** signals electromagnetic/pneumatic suspension system **X204** to slightly lower the vehicle height and gradually increase both the pneumatic stiffness of the semi-active anti-roll links and the default stiffness of the electromagnetic dampers in proportion to the averaged vehicle speed (e.g., over 15 sec). The automation of this adjustment is based on the underlying assumptions that the size of allowable bumps on high-speed roads is relatively small, and that, as vehicle speed increases, minimization of body roll becomes more desirable as part of maintaining vehicle stability. The primary anti-roll stiffness (e.g., for all but very short-duration transient inputs) will thus have been set via the relatively slow-acting semi-active pneumatic link in the anti-roll system.

[**0186**] As a turn is initiated, the electromagnetic dampers augment the anti-roll system by stiffening on the side of the vehicle toward the outside of the turn. The degree of change in electromagnetic damping is continuously adjusted as necessary in sub-millisecond iterations, so as to enhance rather than upset vehicle stability. When a bump, moderate or severe, is encountered, the damper at that wheel rapidly softens to allow the wheel to ride up over the bump. Because the dampers are electromagnetic, this can be accomplished in under a millisecond, which equates, at 60 mph for example, to an appropriate reaction before the bump has entered less than about 10-15% into the tire contact patch. If the bump (or dip) is of a significant height (or depth), and the same input is not also measured and similarly dealt with at the opposite wheel, thus signifying a one-wheel bump, then the damper at the opposite corner simultaneously stiffens to counter the transfer of the bump input across the vehicle through the anti-roll link. While the coupling of the anti-roll link will, at speed, raise the effective spring rate at the corner where the one-wheel bump is introduced, the bump input will have been isolated at that corner for the purpose of ride comfort without the typical compromise of anti-roll stiffness and thus vehicle stability.

[**0187**] 3) Stability control in response to a transient cross-wind gust or extreme evasive driver inputs (e.g., steering and/or braking or accelerating):

[**0188**] Aerodynamic input sufficient to upset vehicle stability initially results in body roll and/or a change in trajectory. Suspension position transducers in electromagnetic/pneumatic suspension system **X204** detect body roll. Yaw sensors in suspension system **X204** detect change in trajectory. In response to this sensor data, controller **X212** modifies distribution of suspension damping and drivetrain torque to stabilize the vehicle. If needed, in extreme cases, regenerative and/or friction braking torque would also be selectively applied or redistributed (e.g., if the driver had already initiated a braking event). Stiffening the appropriate electromagnetic suspension dampers, on a sub-millisecond basis, counters the transient body roll torque. Changes in distribution of wheel torque inputs counter increases in tire slip angle.

[**0189**] In the case of an extreme evasive maneuver that might otherwise destabilize the vehicle by exceeding the limits of traction, suspension dampers, brakes, and drive system, controller **X212** coordinates the torque at each corner of the vehicle to best realize driver intent (e.g., as determined by steering and braking or acceleration inputs). As discussed above for aerodynamic inputs, rapid damper adjustments enhance body roll control and rapid adjustment (including reduction or addition) of drive system torque at each wheel offsets changes in tire slip angle. If the vehicle trajectory continues to diverge from the intended course given by driver input, selective application of friction brakes can be used as an additional corrective measure.

[**0190**] Because the system is fully networked, dynamics controller **X212** has access to brake torque and wheel speed data along with rate of deceleration, suspension position, steering angle, and yaw angle. Based on this data, controller **X212** can provide the closest possible match to driver intent without allowing the vehicle to enter an uncontrollable skid, slide, or spin. Because the brake calipers are electrically actuated, just as the suspension dampers (and drivesystem, when applying this innovation in a hybrid-electric or similar vehicle) are, the braking caliper force can be continuously and independently varied at each corner of the vehicle in a fraction of a millisecond. These adjustments would be in response to driver input, actual brake torque (detected by a strain gauge in the caliper mount), wheel speed (detected by a hall-effect sensor), vehicle deceleration (data from air-bag system g sensor), and commands from the vehicle dynamics controller. Given the semi-active optimization of ride height, spring rate, and anti-roll stiffness for vehicle payload mass and distribution and speed, the performance potential of carbon-based brakes, and the continuously variable and exceptionally rapid response of electromagnetic dampers and brake calipers, this networked chassis system **X200** can provide stability control superior to conventional systems.

[**0191**] System Element: Lightweight, Affordable Electrically Actuated Steering System for Automobiles:

[**0192**] According to an embodiment of the present invention, electrically actuated steering system **X201** of vehicle dynamics system **X200** (see **FIG. 21**) consists of electrically actuated steering with no mechanical link between the driver and steered wheels. As shown in **FIG. 22**, dual electric motors **X214** apply steering force to the wheels through a set of low cost and lightweight bell cranks **X216** and tubular composite mechanical links **X218**. Electric motors **X214** attach to spindles (not shown) attached to bell cranks **X216**. The outside tubular links **X218** connect to steering knuckle levers **X220** on the steering knuckles **X222**. Steering knuckles **X222** attach to the front wheels (not shown).

[**0193**] Electric motors **X214** are controlled by controller **X212** (see **FIG. 21**). Controller **X212** is linked to a steering input device used by the driver. This steering input device can be any device such as a steering wheel, side stick, or yoke. Sensors in the steering input device interpret the driver's intentions. Controller **X212** assesses the signals from the sensors and optimizes the vehicle dynamics accordingly (e.g., also taking into account the current status of vehicle speed, braking, lateral acceleration, tire contact patch, roughness of terrain, and environmental conditions). Controller **X212** then sends commands to the two electric motors **X212** attached to a spindle (not shown) that activates

the bell cranks X**216** in the steering linkage. Links X**218** and X**220** in turn actuate the front knuckles X**222** to physically steer the front wheels (not shown). The steering movement is fed back into controller X**212**, along with the other various data sources, to complete the loop.

[**0194**] Electrically actuated steering system X**201** replaces a conventional steering rack of various configurations and enables both fault tolerance and full digital integration with vehicles dynamic controller X**212** through actuation by dual electric motors X**214**. Important aspects of this embodiment of the present invention include the use of two electric motors, digital control of those motors, the configuration of the steering linkage, the design of the components comprising that linkage, and the steering performance attributes they provide.

[**0195**] The exemplary steering system X**201** of **FIG. 22** enables continuously adjustable, high-performance steering dynamics and maintenance of Ackerman angle over a range of vehicle ride heights, in a modular, energy-efficient, and relatively low cost package. The system also enables alternatives to the conventional steering wheel.

[**0196**] In an embodiment of this aspect of the present invention, electrically actuated steering system X**201** uses simple, constant cross-section advanced composite tubes as linkages X**218**, which reduce weight at an affordable cost. Steering system X**201** also incorporates leveraging bell cranks X**216** to simplify the system. The use of two motors X**214** provides the necessary maximum power for the worst-case driving load cases, while providing backup power (redundant power) under normal driving conditions. The electric motors also provide high-resolution control of the steering system, which can be tailored by the driver and modified in real-time by controller X**212** to best meet driving conditions.

[**0197**] The electric by-wire steering of this aspect of the present invention has a number of benefits over a conventional system. The deletion of a conventional steering column removes weight and cost and is also a safety improvement as the steering column does not intrude into the passenger cabin. Not having a steering column and rack also frees up packaging space in the front end of the vehicle, enabling other technologies and efficiencies to be exploited.

[**0198**] The linkage design of **FIG. 22** also overcomes the problems of producing sufficient Ackerman in a steering system, which is crucial to overall vehicle efficiency and to minimize abnormal tire wear. In particular, links X**218** are designed to minimize loads on adjacent bearings and joints, which means that lighter and cheaper joints can be used. In addition, links X**218** are designed to minimize frictional energy due to non-optimal transfer angles. Because the steering is a pure by-wire technology, this feature could be integrated into the vehicle's central information management and control system X**212** so that steering input, speed, and feel could all be adjusted according to the dynamic and environmental conditions that prevail, as well as to the driver's preferences.

[**0199**] Another advantage of the steering system of **FIG. 22** is the ease with which it can be adapted for both left hand and right hand drive versions of a vehicle.

[**0200**] System Element: Electrically Actuated, Lightweight, And Durable Braking System For Automobiles:

[**0201**] Referring again to **FIG. 21**, in this aspect of the present invention, braking system X**202** electronically integrates the control and function of independent brake sub-assemblies at each corner of the vehicle with that of the overall vehicle information management and control system X**212**. According to an embodiment of the present invention, braking system X**202** includes control software and operating algorithms, performance monitoring sensors, carbon/carbon brake pads and rotors, and electrically actuated calipers.

[**0202**] While carbon/carbon brakes, made from a composite material comprising carbon fiber reinforcement within a carbon matrix, can perform better than conventional brakes, even at reduced mass, they typically are unsuitable for general automotive applications because of their inherent non-linear friction behavior that changes significantly with changes in temperature and humidity. To overcome this limitation, braking system X**202** incorporates electrically actuated calipers that are not physically connected to the driver's brake pedal. This electrically actuated carbon/carbon braking system X**202** reduces mass, provides long disc and pad life—possibly lasting as long as the vehicle itself, reduces brake fade, improves consistency of performance relative to driver input, and improves anti-lock capability.

[**0203**] **FIG. 23** illustrates an electrically actuated caliper X**224** and carbon/carbon rotor X**226** and pads X**228**, according to an embodiment of the present invention. **FIG. 24** illustrates an exemplary rear left brake sub-assembly, including electrically actuated caliper X**224** and carbon/carbon rotor X**226** and pads X**228**, mounted outboard in relation to the rear suspension corner. **FIG. 25** shows an exemplary front brake assembly, including electrically actuated calipers X**224** and carbon/carbon rotors X**226** and pads X**228**, and mounted inboard in relation to the front suspension corners. In the example of **FIG. 25**, electrically actuated calipers X**224** are mounted to the housing X**230** of the traction motor X**232**, which saves mass and cost in comparison to providing separate mounting points for calipers X**224**.

[**0204**] As shown in **FIG. 26**, in an embodiment of this aspect of the present invention, braking system X**202** includes a pressure sensitive input device X**234** (e.g., a pressure transducer on a brake pedal), brake torque sensors X**236** at each wheel X**237** (e.g., strain gauges on the caliper mounts), wheel speed sensors X**238** (e.g., typical hall-effect devices), a vehicle deceleration sensor X**240** (e.g., could access data from g sensor for airbag system), brake rotor and pad temperature sensors X**242** (e.g., thermocouples), electrically actuated calipers X**224**, carbon-carbon pads and rotors X**226** (e.g., discs), and a central controller X**212**. Preferably, there is no hydraulic link between the driver input and the brake hardware. Also, preferably, the system is entirely electric including monitoring, application, and control.

[**0205**] The use of lightweight, high-performance carbon-carbon brake pads and rotors is made possible by physically de-coupling the driver's brake input from the brake caliper actuation. Driver input is instead translated, via a pressure transducer and controller, into a request for a given rate of vehicle deceleration to be achieved by the caliper/pad pres-

sure appropriate for the temperature and moisture content of the brake friction materials. The braking system is tasked with achieving the desired rate of deceleration with an optimal distribution of brake caliper forces and associated braking torque at each wheel. The electrically actuated caliper therefore accommodates the unique properties of carbon/carbon brake pads, which can change dramatically under different moisture content and temperature conditions.

[**0206**] Based on sensor data for vehicle mass, including current payload and mass distribution, vehicle speed, environmental conditions, and pad and rotor temperatures, controller X**212** determines an initial braking force at each wheel to achieve the desired deceleration from the driver input. Individual wheel speed sensors X**238** and brake torque sensors X**236** then provide immediate feedback as to relative effect at each wheel. Controller X**212** then re-optimizes the caliper forces at each wheel based on this feedback and in combination with an overall vehicle deceleration force measurement. This process repeats in sub-millisecond iterations to provide the closest feasible match of actual vehicle deceleration to the driver's request, compensating for conditions such as brake friction material status, road surface condition, and limits of tire traction.

[**0207**] In an important aspect of the integrated vehicle dynamics system of the present invention, braking system X**202** receives commands from dynamics controller X**212**, which has access not only to brake torque, wheel speed, and rate of deceleration, but also suspension position and steering and yaw angles. Controller X**212** can therefore apply the brakes at each corner of the vehicle as needed to contribute to overall vehicle stability control, even when the driver is not providing a brake system input. Controller X**212** provides the closest possible match to driver intent without allowing the vehicle to enter an uncontrollable skid, slide, or spin.

[**0208**] In comparison to conventional braking systems, electrically actuated calipers X**224** eliminate the need for the typical conventional hydraulic system including, for example, brake lines, seals, brake booster, master cylinder, proportioning valves, and a complex anti-lock fluid pressure modulation system. Thus, the present invention provides a significant weight savings, a reduction in system complexity, many performance improvements, and attractive life cycle, maintenance, and environmental benefits.

[**0209**] In addition, by using lightweight carbon/carbon materials in the rotor and pads, the unsprung mass of the wheel assembly can be reduced, which improves ride, handling, and stability.

[**0210**] The pressure applied by electrically actuated calipers X**224** is continuously variable and can be controlled very precisely, very rapidly, and independently at each wheel, thus enabling improved anti-lock, traction-control, and stability-control functionality. Furthermore, NVH (noise, vibration, and harshness) is also improved by the provision of completely silent and vibration-free anti-lock braking without the need for conventional fluid pressure modulation pump and valves.

[**0211**] Electrical actuation of the brakes permits the use of high-performance, low-mass carbon/carbon materials in the rotor and pads of the brake system, which heretofore would have been impractical for non-race applications due to the non-linear friction-temperature/moisture characteristics of these materials. Thus, electrically actuated calipers make it possible to use carbon-carbon brake rotors (discs) and pads for general automotive purposes (i.e., other than racing), and thereby provide reduced mass, improved peak performance, improved consistency of performance, and extended durability.

[**0212**] System Element: Integrated Electromagnetic/Pneumatic Suspension System for Automobiles:

[**0213**] Referring again to **FIG. 21**, in this aspect of the present invention, the electrically and physically integrated electromagnetic/pneumatic suspension system X**204** combines an adjustable air spring for variable ride height and spring rates, a continuously tunable pneumatic transverse link to limit body roll, and an actively controlled electromagnetic damping mechanism. Suspension system X**204** uses an electromagnetic linear ram with integrated pneumatic spring, such as is produced by Guilden Ltd. (U.K.) and Advanced Motion Technologies (U.S.A.) (hereafter referred to as "AMT"). This aspect of the present invention provides overall control of vehicle ride height, attitude, and stability, with the addition of energy-efficient, semi-active body roll control.

[**0214**] This aspect of the present invention applies linear ram technology, such as AMT's technology, to lightweight vehicles to overcome the challenge of providing consistent driving dynamics over a wide range of vehicle gross mass and driving conditions with a minimum of energy consumption, cost, and complexity. The integrated control system continuously adapts ride height and spring, damping, and anti-roll characteristics to payload, driver inputs and preferences, and road conditions. Furthermore, this aspect of the present invention permits semi-active variable anti-roll characteristics with minimal energy consumption, and without the over-sizing of the linear rams that would result from attempting to counter all body-roll forces via the ram's electromagnetic damping.

[**0215**] In an embodiment of the present invention, **FIGS. 27A and 27B** illustrate electromagnetic/pneumatic struts X**244** as applied to both a front (left) suspension assembly X**246** and a rear (right) suspension assembly X**248**, respectively. To provide further context, **FIG. 28** shows struts X**244** in relation to other suspension components and subframe X**104**. Subframe X**104** is preferably a single welded aluminum component that performs several functions, including reacting the loads from the many suspension and powertrain components, reacting and distributing crash loads, and reacting traction loads.

[**0216**] According to an embodiment of this aspect of the present invention, integrated automotive suspension system X**204** includes a set of four pneumatic/electromagnetic linear-ram suspension struts, a pneumatically variable transverse link at each axle, and a digital control system with links to other vehicle sub-systems. The invention includes control parameters, component specifications, and configurations to provide—with minimal energy consumption and in some cases net energy gains—the simultaneous semi-active optimization of suspension in response to driver preferences and transient inputs, payload mass and distribution, road surface, and aerodynamic forces.

[**0217**] **FIG. 29** illustrates an exemplary pneumatic/hydraulic system X**250** of suspension system X**204**. As shown,

system X**250** includes a pneumatic pump X**252**, a pressure reservoir X**254**, pneumatic control valves X**256**, hydraulic anti-roll struts X**263**, and electromagnetic/pneumatic struts X**244**. For simplicity, only two of the preferable four struts X**244** are shown (representing the suspension system for one of two axles on a four-wheeled vehicle). Pneumatic lines X**260** and hydraulic links X**262** connect the components as shown in **FIG. 29**. Pneumatic elements X**258** act as continuously variable pneumatic anti-roll links, which are connected through hydraulic links X**262** to electromagnetic/pneumatic struts X**244**, thus achieving a controllable and continuously variable link between the mechanical motion in the suspension struts on opposite sides of the vehicle.

[**0218**] The linear rams of electromagnetic/pneumatic struts X**244** include a variable air spring and variable electromagnetic damper. The pressure in the air spring can be increased or decreased to change the static strut length under load and to adjust the spring rate. The electromagnetic resistance load in the damper can be varied in under one millisecond, or up to 1,000 times per vertical cycle of the strut piston. In this manner, the overall suspension system X**204** can take advantage of the widely and, in the case of damping, rapidly variable, characteristics of the linear ram components.

[**0219**] The mechanical motion of struts X**244** is linked transversely (across the vehicle) to counter body roll. The link itself is isolated, so that a failure that might compromise anti-roll stiffness does not affect the pneumatic springs. And, because it operates independently of electromagnetic/pneumatic struts X**244**, the pneumatic/hydraulic transverse link (including X**252**, X**254**, X**256**, and X**263**) can be implemented with a wide variety of active, semi-active, and passive suspension spring and damper options and configurations. Hydraulic elements X**263** are connected to the variable pneumatic element X**258** at the center of the transverse link X**262** to the left and right struts. Alternatively, this can be done pneumatically. The stiffness of the transverse link X**262** is then adjusted by varying the pressure in the isolated pneumatic segment X**264**, either by adding pressure from a pre-pressurized reservoir X**254** or by venting excess pressure. Diaphragms X**265** with relatively large surface area reduce the pressure required in the variable pneumatic portion of the roll-control link. As an example, working pressure is on the order of 60-120 psi. Thus, minimal energy inputs are required for tuning the anti-roll characteristics with changes in driver preferences, payload, quasi-average vehicle speed, and road surface conditions. The peak power associated with the frequent tuning of this system is further reduced by the use of reservoir X**254**, and therefore a smaller pump X**252**. Control of fast transients in body roll and pitch is then augmented by rapidly varying the damping rate—or degree of powered actuation—of each individual electromagnetic strut during acceleration, braking, cornering, and aerodynamic inputs. The semi-active transverse link and the electromagnetic struts together comprise an energy-efficient fully active suspension.

[**0220**] This solution for semi-active variable control of body roll permits downsizing the electromagnetic struts X**244** to meet only the requirements of damping fast-transient bump, pitch, and roll inputs, thus augmenting the tunable pneumatic anti-roll system just as they augment the pneumatic springs. As a result, energy consumption associated with the continuously-variable control of body roll can be well below what would be required if all roll control were accomplished via electromagnetic rams alone and/or with rapid and frequent adjustment of the pneumatic springs.

[**0221**] According to an embodiment of the present invention, vehicle ride height is adjusted via the air springs either in direct relation to driver selection of settings (e.g., for rough terrain or deep snow) or automatically to compensate for changes in payload mass and/or distribution and for changes in average vehicle speed (e.g., automatically defaulting to normal height over a preset rough-terrain maximum speed of 35 mph, and then lowering further at highway speeds of 55 mph or higher). Changes in ride height can be executed over a period on the order of 5-15 seconds (depending on the magnitude of change) to avoid disrupting passengers and to minimize energy consumption and pump or reservoir capacities. Spring rates are thus also adjusted with changes in load on the vehicle as a whole and on each of the four suspension struts individually.

[**0222**] Both the stiffness of the transverse anti-roll links and the default electromagnetic resistance load on the dampers is adjusted in keeping with payload mass and distribution plus driver preferences (e.g., for emphasis on extra nimble handling or ride comfort). These anti-roll and damping characteristics are then continuously varied—still as a semi-active function—in accordance with driver acceleration, braking, and steering inputs (e.g., cross-wind wind gusts or bumps and dips in the road surface). Finally, active control of and power input to the linear rams can, just as rapidly, apply active forces—as distinguished from the reactive forces of damping—to further counter dynamic inputs.

[**0223**] All key suspension variables can be controlled via a stability-control algorithm in the vehicle's central information management and control system X**212**, which optimizes the behavior of each strut according to real-time dynamic conditions and driver inputs. Controller X**212** draws upon input from driver preference settings; acceleration, braking, and steering inputs; vehicle speed, mass, and payload-distribution data; and feedback from sensors detecting the real-time dynamics of the vehicle, road surface conditions, and aerodynamic forces (such as cross winds) as a function of wheel speeds, yaw rates, slip angles, and suspension travel.

[**0224**] **FIG. 30** illustrates an exemplary control flowchart for the operation and control of the suspension system, according to an embodiment of the present invention. In this example, the suspension system includes variable pneumatic springs and anti-roll systems with electromagnetic damper/actuators. In **FIG. 30**, the single-line arrows represent commands sent to various system controllers. The double-line arrows represent information flows between controllers. The double-line boxes represent decisions made by various system controllers related to the suspension.

[**0225**] As shown, the ram sensors and control module X**278** contains three main systems: a suspension position transducer circuit X**278**A, an air spring valve control module X**278**B, and a pulse-width-modulation power switching controller X**278**C. In a preferred embodiment, module X**278** is an AMT ServoRam™ sensor and control module.

[**0226**] Suspension position transducer circuit X**278**A receives continuously variable ride height settings X**288** and provides information about the operation and status of each

suspension corner, such as instantaneous position relative to the baseline ride height setting, mean deviation from the ride height setting, direction of travel, and the velocity of each ram.

[0227] Air spring valve control module X278B receives continuously-variable ride height settings X288 and, in response, adjusts air pressure in each spring as determined by vehicle dynamics controller X212 and reports the pressure at each corner X290.

[0228] Pulse-width-modulation power switching controller X278C receives baseline damper settings X292 and transient commands X294 (e.g., damping and actuation) and reports information on power consumption and power generation. Controller X278C contains power switches, a three-phase rectifier, and diode-based isolation to perform high- and low-velocity damping with the ram. High velocity damping generates electricity, which is then stored in the LLD batteries 100 and 101. Low velocity damping consumes energy from the LLD 100 and 101. Information regarding how much power is consumed and generated is sent to the battery management controller X298. Controller X278C receives both baseline damper settings X292 and transient commands X294 that together determine its behavior in real time.

[0229] The data generated by sensors and control module X278 is fed back X296 to the vehicle dynamics controller X212 to determine real-time adjustments to the suspension behavior X286 and to determine the variable "baseline" anti-roll and damping stiffness X282. The real-time (e.g., millisecond timeframe) damping adjustments X286 are determined by, for example, road surface bump inputs; acceleration, brake, and steering inputs; instantaneous body pitch and roll; aerodynamic loads; vehicle yaw angle; severe tire slip angles; and from the baseline damping and stiffness X282.

[0230] Baseline anti-roll and damping stiffness X282 is determined by, for example, user preference settings, payload mass, mass distribution in the vehicle, speed, roughness of the road surface, and driver acceleration, braking, and steering inputs X280. The pressure in the transverse links is set X284 in order to adjust anti-roll stiffness to the desired level.

[0231] The ride height setting X274 that is fed to circuit X278A and module X278B is determined as a function of vehicle speed X272, driver ride-height preference settings (e.g., rough terrain vs. normal) and suspension character preferences (e.g., sport, standard, luxury) X270, payload mass and mass distribution X276, and air spring pressure at each corner X290.

[0232] The air spring of this aspect of the present invention enables optimization of spring rate, maintenance and adjustment of vehicle ride height with changes in driving conditions or driver preferences, and adjustment of vehicle attitude regardless of the payload or its location in the vehicle. Likewise, the electromagnetically variable damping and pneumatically adjustable anti-roll link can be tuned for changes in gross vehicle weight, speed, traction conditions, roughness of terrain, and driver preference. Damping, spring rate, and anti-roll stiffness together can be controlled by the vehicle's central information management and control system X212, thereby allowing high resolution and fast optimization of suspension characteristics under different dynamic conditions.

[0233] In addition to the improvements in overall vehicle characteristics, this invention significantly reduces the suspension system's contribution to total vehicle weight and improves vehicle tailorability and upgradability. Such parameters are crucial to success in the increasingly competitive sales environment in terms of initial sales, resale, and life cycle cost reduction.

[0234] System Element: Innovative Design and Production Approach for Lightweight Composite Automotive Suspension Components:

[0235] This aspect of the present invention provides a design and production approach for advanced composite suspension components that incorporates specific design and processing features, which contribute directly to improved vehicle performance and affordable component production. **FIG. 21** illustrates suspension components X206 according to this aspect of the present invention. In this example, suspension components X206 are lightweight composite lower suspension arms (or "A-arms") mounted at each corner of the front suspension assembly.

[0236] **FIGS. 31A and 32B** illustrate a carbon-reinforced composite A-arm X300 constructed according to the present invention. As shown, A-arm X300 features a large solid cross-section to minimize mass and simplify production tooling. The cross-section A-A shown in **FIG. 31B** demonstrates this large cross section X302. A-arm X300 also incorporates a generous tapered geometry to reduce stress concentrations, as is best shown in the solid and finite element models of **FIGS. 32A and 32B**.

[0237] Based on the large cross-section and tapered geometry, this aspect of the present invention provides advanced composite suspension components that are producible with an economically acceptable volume production process (e.g., 50,000 vehicle sets per year or more). In a further embodiment, the invention incorporates tailored reinforcement and co-processed metallic interfaces. In particular, the invention applies a large included volume (LIV) design philosophy that plays to the positive attributes of composite materials, by avoiding locally complex design features, maximizing the moment of inertia of a component's cross-section, and maximizing a component's long-term durability by reducing the applied load on the component. Further features of the invention include the use of large diameter bonded metallic interfaces X300A to facilitate the low load concentration transfer of applied loads and the incorporation of conventional automotive bushings to avoid the cost of custom designed bushings.

[0238] This aspect of the present invention involves a specific design strategy and interdependent production approach. The design strategy uses LIV shaping to manage loads, uses bonded metallic inserts to manage mechanical interfaces, and uses tailored reinforcement to manage internal loads and provide desired durability.

[0239] The LIV philosophy imposes simple, high moment of inertia shaping to a component to best exploit the advantages of carbon-reinforced polymers in terms of structural efficiency and ease of processing. Components made according to the present invention have closed cross-sections X300B that approach maximum internal volume for a given surface area. In the case of suspension components, this closed cross-section is quite different from conventional

stamped sheet metal components, which typically use solid components with open cross-sections.

[0240] In an embodiment of the present invention, all mechanical interfaces include a simple, large diameter, sleeve type single lap bonded metallic bushing or insert. The bonded insert represents a very simple and reliable solution to the often complex problem of having to locally transfer loads from one interfacing structure to another. The use of bonded inserts enables a very simple geometric interface for the composite, contributing to low cost and structural efficiency, while using a metal detail to transfer the loads from the mating detail into the composite component in as efficient a manner as possible, and insuring uniform load distribution into the composite material.

[0241] In an embodiment of the present invention, the use of tailored reinforcement via cut and kit preforms enhances the component's ability to manage the applied loads in as efficient a manner as possible, while being careful not to introduce additional cost into the production process.

[0242] In contrast to the present invention, conventional components are typically mass-produced steel or aluminum. Although these conventional components may perform well over the lifetime of the vehicle, they are typically heavy, thereby compromising weight and optimal performance for durability and low cost. The approach of the present invention, on the other hand, provides for a significantly lighter weight component with equivalent durability and the potential for competitive cost.

[0243] Suspension components constructed of advanced composite materials (e.g., carbon fiber reinforced thermoplastic) are considerably lighter and can provide improved stiffness over conventional metal components. The lighter weight and improved stiffness reduce unsprung mass, which has proved to be a critically important aspect in the design of lightweight vehicles for acceptable ride and handling. Improved stiffness in the suspension component also gives greater control of compliance in the overall suspension of the vehicle, as each component can be better tailored to its particular role. Advanced composite suspension components also enable optimized structural shaping for the applied loads and surrounding packaging, thereby providing additional design freedoms.

[0244] This aspect of the present invention can be applied to most swingarm type suspension components provided their application is considered from the outset of the vehicle design effort, and accommodation provided in an appropriate fashion. In addition, notwithstanding the particular benefits associated with advanced composite suspension components, this aspect of the present invention can be applied to any structural vehicle component. Indeed, features such as LIV shaping, large cross-sections, and tapered geometries have beneficial applications to many different automobile components.

[0245] System Element: Modular Rear Suspension and Traction Motor Unit for Automobiles:

[0246] This aspect of the present invention provides an integrated rear suspension module X**208**, as shown in **FIG. 21**. Module X**208** is a carbon fiber reinforced trailing arm type suspension component that functionally integrates the structural attachment for an integrated motor and gearbox, and serves as the primary structural member between the wheel and the vehicle. Designed to be modular, module X**208** can be removed and fitted with either a wheel with an integrated wheel motor and brakes or a wheel/brake system only.

[0247] **FIG. 33** illustrates an exemplary integrated rear suspension module X**208**, according to an embodiment of the present invention. As shown, module X**208** includes a composite trailing arm X**350**, a brake assembly X**352**, a motor X**354**, a transmission X**356**, and a suspension strut X**358**. Composite trailing arm X**350** is preferably made from carbon fiber reinforced polymer and incorporates a housing for motor X**354**. Motor X**354** is preferably a hub motor attached to trailing arm X**350** and mounted within its integral housing. Transmission X**356** is preferably a step down epicyclic gearbox that is coupled in series to motor X**354**. Motor X**354** and transmission X**356** are designed to dispense with the need for a conventional knuckle, half shaft, and spindle.

[0248] FIGS. **34**A-**34**C illustrate composite trailing arm X**350** in greater detail, showing key interface details and the integrally molded bushing X**350**A. As shown, trailing arm X**350** includes an integrally formed housing X**362** and housing face X**360**, as well as bushings X**350**A for mounting trailing arm X**350** to a vehicle body. Trailing arm X**350** can be molded to suit any vehicle geometry. As shown in FIGS. **34**A-**34**C, for example, the angle X**366** between the front to back vehicle axis X**368** and the mounting axis X**370** is 105 degrees, and the angle X**372** between the front to back vehicle axis X**368** and the inboard side X**374** of trailing arm X**350** is 15 degrees.

[0249] **FIGS. 35A and 35B** illustrate a solid model of composite trailing arm X**350**.

[0250] **FIG. 36** illustrates rear suspension modules X**208** mounted to rear wheels X**380** of a vehicle. Arrow X**382** indicates the direction of the front of the vehicle. In this configuration, the single-piece advanced composite trailing arms X**350** of modules X**208** reacts the traction loads of the traction motor X**354**, and reacts suspension loads into the floor component of the vehicle. The active electromagnetic/pneumatic suspension struts X**358** of modules X**208** adjust the ride height of the vehicle and thus the vehicle pitch, while also providing high-resolution real-time modification of the dampening of the strut for superior control of vehicle dynamics.

[0251] Based on the large cross-section and tapered geometry of trailing arm X**350**, this aspect of the present invention provides an advanced composite suspension component that is producible with an economically acceptable volume production process (e.g., 50,000 vehicle sets per year or more). In a further embodiment, the invention incorporates tailored reinforcement and co-processed metallic interfaces. In particular, the invention applies a large included volume (LIV) design philosophy that plays to the positive attributes of composite materials, by avoiding locally complex design features, maximizing the moment of inertia of a component's cross-section, and maximizing a component's long-term durability by reducing the applied load on the component. Further features of the invention include the use of large diameter bonded metallic interfaces (e.g., bushing X**350**A) to facilitate the low load concentration transfer of applied loads and the incorporation of conventional automotive bushings to avoid the cost of custom designed bushings.

[0252] The design and fabrication approach of this aspect of the present invention results in a very lightweight trailing arm component **X350**, which thereby reduces unsprung mass. Trailing arm component **X350** is stiffer structurally than a conventional (e.g., stamped) trailing arm component, and therefore enables design optimizations that minimize intrusion into the interior volume of the vehicle. By integrating traction motor **X354** with transmission **X356**, the present invention achieves a significant reduction in parts count, with commensurate production cost savings and weight reduction, and also negates the need for driveshafts and their associated efficiency losses.

[0253] System Element: Active Tire Contact Patch Control System to Manage Rolling Resistance and Dynamics of Automobiles:

[0254] In this aspect of the present invention, on board sensors monitor a range of vehicle parameters to actively optimize tire rolling resistance and contact patch geometry by adjusting tire pressure. The optimization results in an overall improvement in vehicle efficiency and safety under a wide range of operating conditions.

[0255] Conventional tire pressure monitoring systems typically include a pressure and temperature sensor that simply feeds back to the driver to provide a warning when a tire starts to lose pressure. In addition to providing this tire failure warning function, this aspect of the present invention monitors and adjusts tire pressure to optimize performance. Using the vehicle's central information management and control system **X212** (see **FIG. 21**), this aspect of the present invention uses an active tire pressure monitoring system **X210** to feed back information about where the tire contact patch is on the performance map of the vehicle. This additional functionality, combined with information from other vehicle sensors already in the vehicle (e.g., wheel speed sensors, accelerometers, and air spring pressure sensors) enables the dynamics controller **X212** to tune the dynamic parameters of the vehicle for optimum stability and efficiency at any point in the performance map of the vehicle. This added control results in improved braking response and shorter braking distances, improved steerability, traction, and ride in response to a wider range of road conditions and driver inputs. Dynamics controller **X212** also ensures that the tire is inflated to a pressure that optimizes fuel consumption and safety.

[0256] According to an embodiment of the present invention, an exemplary tire control patch system includes sensors, wiring infrastructure, and computer algorithms and application software. Sensors embedded in the tires and around the vehicle monitor tire pressure and temperature, vehicle mass and center of gravity, traction, and environmental data and report that data through the wiring infrastructure to the vehicle's central information management and control system **X212**. System **X212** uses a vehicle dynamics and stability algorithm to interpret the data in conjunction with the driver's input. In response, system **X212** actively increases or decreases the tire pressure to optimize the contact patch geometry that the tire makes with the road surface. The optimized patch geometry provides the optimum combination of rolling resistance and traction, thereby improving overall vehicle efficiency and safety.

[0257] Design of Fuel-Cell Hybrid-Electric Powertrain System for Automobiles

[0258] This aspect of the present invention provides a powertrain system for hybrid-electric vehicles. Embodiments of the present invention involve layout (i.e., packaging), configuration, electrical design and control strategy, and thermal management of the powertrain.

[0259] A preferred embodiment of the powertrain system includes a fuel cell and battery that together provide power to four independently controlled electric motors (one for each wheel). A digital power manager controls high-power switches to dynamically allocate battery or fuel-cell power to each wheel from either source and also to manage regenerative braking.

[0260] FIG. CR1 illustrates the layout of the major propulsion components of an exemplary powertrain system, according to an embodiment of the present invention. As shown, the powertrain system includes pressure vessels **107**, **108**, and **109** that store compressed hydrogen for use in the fuel cell **110**, load-leveling batteries **100** and **101** that increase the total propulsion power available, propulsion motors **116**, **117**, **120**, and **121** that drive the wheels through planetary reduction gears **127**, **128**, **129**, and **130** and store energy recovered from braking, and a cooling system that maintains proper operating temperatures for each component. The cooling system includes a heat exchanger **103** for batteries **100** and **101**; a coolant expansion tank **105** for heat exchanger **103**; a heat exchanger **113** for fuel cell **110**; fuel cell cooling lines **136**, a coolant pump **114**, and a coolant expansion tank **115** for heat exchanger **113**; propulsion motor heat exchanger **124**; and motor cooling lines (not shown), a coolant pump (not shown, but referred to herein as item **125**), and an expansion tank **126** for propulsion motor heat exchanger **124**.

[0261] During operation of the exemplary powertrain system of FIG. CR1, fuel cell **110** converts hydrogen from the pressure vessels **107**, **108**, and **109** and oxygen from the ambient air. The incoming air is passed through an air intake filter **112** and a blower **111**. The cooling system for fuel cell **110** includes a coolant pump **114**, a heat exchanger **113** to transfer heat from the cooling circuit within the fuel cell stack **110** to the heat exchanger **138** at the front of the vehicle that rejects heat to the ambient atmosphere, and an expansion tank **115**. Coolant lines **136** connect the two heat exchangers **113** and **138**, with coolant circulated by pump **114**.

[0262] This exemplary powertrain system includes four electric motors, two 9-kW peak switched reluctance motors **120** and **121** in the rear hubs, and two 21-kW peak permanent magnet motors **116** and **117** mounted inboard to power the front wheels. Front motors **116** and **117** and rear motors **120** and **121** are connected to front **118** and rear **122** motor inverters, respectively, which are in turn connected to a power converter/switching controller **131** that manages how power is distributed through the vehicle. The power management system of power converter/switching controller **131** is described in detail below in reference to FIG. CR3.

[0263] The output shaft of each rear motor **120** and **121** is coupled to its associated wheel through a hub-mounted planetary reduction gear set **129** and **130**, respectively. Front motors **116** and **117** are coupled to half-shafts through constant mesh twin reduction gears **127** and **128**, respectively.

[0264] A battery controller module **102** monitors and controls the operating environment (e.g., cell temperature and voltage, current, and module temperature) for the battery modules. The propulsion system's microcontroller **119** interprets user input (e.g., accelerate, brake, and turn), vehicle dynamics data (e.g., pitch, yaw, roll, speed, and wheel slip), and propulsion system status (e.g., battery state of charge and fuel level) and determines the power level for each wheel. All of the propulsion components are sized to meet market requirements for acceleration, hill-climbing, driving range, and top speed.

[0265] FIGS. CR2A, CR2B, and CR2C illustrate the layout of the major propulsion components of FIG. CR1 in plan, side, and front views, respectively.

[0266] FIG. CR3 schematically represents the exemplary powertrain system of FIG. CR1 with additional detail related to how power converter/switching controller **131** works. The system uses a network of switches to manage power distribution between the fuel cell, load-leveling device, accessory power supply, and propulsion motors. It allows the fuel cell or load-leveling device (LLD) to be connected either via a bus or separately to the propulsion motors and low-voltage accessory power bus. The network of switches is managed by incorporating driver input (desired torque at the wheels) with the state of each motor and associated controller, LLD, fuel-cell system, and accessory loads.

[0267] As shown in FIG. CR3, the positive terminal of fuel cell **110** is connected through a diode **134** to a junction **131**E of power converter/switching controller **131**. A capacitor **135** connects the output of diode **134** to the negative terminal of fuel cell **110**, which is the propulsion system's common ground. This capacitor **135** acts as a low pass filter for fuel cell **110**'s output.

[0268] The positive terminal of load-leveling battery modules **100** and **101** connects to power converter **131** at the output **131**F to a switch **131**B. Switch **131**B connects to a dc/dc converter **131**A. The output **131**G to switch **131**C and the output **131**H to switch **131**D connect to the front and rear inverters **118** and **122** for the traction motors, respectively. Power converter **131** connects to a dc/dc converter **132** that delivers power onto the vehicle's low-voltage battery **133** and power bus **139**. Power bus **139** supplies non-traction electrical power (for accessories such as lights, air conditioning fan, door locks, and entertainment systems). Although the example of FIG. CR3 shows low-voltage power bus **139** as a 42-volt bus, this voltage could be set at any other level as required by a specific vehicle design.

[0269] Switches **131**B, **131**C, and **131**D of FIG. CR3 are bi-directional, meaning that current can flow in either direction across the terminals of the switches. Their switching speed is also relatively slow, in a range of approximately a few Hertz. In a preferred embodiment, switch **131**B is rated at approximately 35 kW, switch **131**C is rated at approximately 47 kW, and switch **131**D is rated at approximately 23 kW. These switch power ratings are determined by the maximum power of inverters **118** and **122**. Fuel cell **110** supplies dc/dc converter **131**A with up to 5.5 kW in a voltage range of about 175 V to 245 V in this exemplary design. (At zero load, the dc/dc converter sees an input voltage of approximately 280 V.)

[0270] The output voltage of dc/dc converter **131**A to the high power bus sees the voltage of the traction battery, which also ranges from 175 (the instance after the traction battery is relieved from delivering 35 kW power to the electric motors) to 275 V (the instance the traction battery's SOC has reached its maximum (80%) at the end of a charging event).

[0271] Switches **131**B, **131**C, and **131**D have different functionalities. Switch **131**B controls three states of connectivity between fuel cell **110** and LLD **100** and **101**: (1) charging LLD **100** and **101** through dc/dc converter **131**A; (2) connected directly to LLD **100** and **101**, and (3) not connected to LLD **100** and **101**. When connected directly, the system acts as a common bus where the output voltage of fuel cell **110** and LLD **100** and **101** must be the same. Switches **131**C and **131**D determine the source of the power for front and rear inverters **118** and **122**, respectively. The motors are then disconnected from the traction battery. Switches **131**C and **131**D are meant to provide traction motor inverters **118** and **122** with fuel cell power, with battery power, or with a combination of both.

[0272] Although FIG. CR3 illustrates a power management system in the context of front/rear motor control, as one of ordinary skill in the art would appreciate, these same principles could be applied to independent wheel motor control.

[0273] The various states allowed by the exemplary switching network of FIG. CR3 are listed in the power management system state table shown in FIG. CR4. The "switch" columns show the position of the switches. The "Power source" columns show, for both the front and rear inverters, whether the power source is the fuel cell, LLD, or both. The "Regen possible" column shows which switch settings allow regenerative braking for the front and rear motors. The "LLD charge" column lists the switch settings that allow the fuel cell to charge the LLD. Not all of these states would necessarily be used for any given control strategy. However, the flexibility of the multiple operating states allows the fuel cell and/or LLD to deliver power to the traction motors without using a common bus, which would require that their voltages match.

[0274] Referring again to FIG. CR3, switches **131**B, **131**C, and **131**D are connected together so that dc/dc converter **131**A can be used primarily for charging LLD **100** and **101** from fuel cell **110** and either power source can supply power directly to the traction motor inverters **118** and **122**. This configuration improves electrical efficiency, reduces mass, and reduces the size of dc/dc converter **131**A, since only a fraction of the total rated power needs to be conditioned by dc/dc converter **131**A. The arrangement of switches **131**B, **131**C, and **131**D and their connections also allows fuel cell **110** and LLD **100** and **101** to power traction motor inverters **118** and **122** independently or simultaneously, depending on the control strategy. Additionally, using dc/dc converter **131**A to charge LLD **100** and **101** at a relatively low rate (5.5 kW maximum rate) is an efficient way to charge LLD **100** and **101**.

[0275] The sizing of components in FIG. CR3 illustrates an exemplary vehicle design and could be modified to meet the requirements of different vehicles with larger or smaller powertrain requirements, while still maintaining the same overall architecture. Additionally, although this exemplary system includes a rear motor inverter **122** and a front motor inverter **118** that control two motors, any other propulsion

system design having more than one inverter would work with this system. For example, there could be four inverters (one for each wheel), three inverters (e.g., two inverters for the front motors and one inverter for one or two rear motors), two inverters that control two front motors and no rear motors (i.e., a front-wheel-drive system), or other arrangements in which there are more than one traction motor inverter.

[**0276**] The table of FIG. CR**5** describes an exemplary propulsion control strategy for the powertrain components of FIGS. CR**1** and CR**2**, according to an embodiment of this aspect of the present invention. As shown, the "Traction power required" lists, in kW, the different operating ranges that require different control strategies. The "LLD full?" column indicates whether LLD **100** and **101** is fully charged, which is defined, for example, as 80% of its maximum state of charge. The "Source of traction power & LLD charging" column indicates the source from which the motors draw power and whether the LLD is charging. "FC" corresponds to fuel cell. Finally, the "Switching state options" column lists the options for switching states, which correspond to the switching state numbers listed in the leftmost column of the table in FIG. CR**4**.

[**0277**] Notably, FIG. CR**5** describes only which power source delivers power to the wheels and when the LLD is charged, and does not describe whether the power is delivered to the front or rear motors. In all the cases described in the table of FIG. CR**5**, the power could be delivered to the front, rear, or both motors from the power source listed.

[**0278**] In normal driving when the LLD is not fully charged and the tractive power demand is less than 5.5 kW, dc/dc converter **131**A draws a constant 5.5 kW from fuel cell **110**, charging LLD **100** and **101** with whatever power remains after providing the desired power to the traction motors. When the car is stationary, LLD **100** and **101** is also charged, up to its upper limit of 80% of its maximum capacity (80% state of charge (SOC)). As soon as the power demand exceeds 5.5 kW, dc/dc converter **131**A is shut off, and all demanded power is delivered directly to inverters **118** and **122** by fuel cell **110** without conversion, which improves efficiency. Once the SOC reaches it upper charge limit (80% SOC), the charging procedure is stopped, and the vehicle is driven by battery power or fuel cell+LLD power, until SOC has reached about 74%. Then the process starts all over again (charging to 80%). LLD **100** and I **01** is charged only to 80% SOC, where no gases are generated and coulombic efficiency stays high (near 1).

[**0279**] LLD **100** and **101** will occasionally be charged to a full 100% to keep the SOC tracking device calibrated. Only then would a constant current/constant voltage charge procedure be followed. Otherwise, charging is done as described above.

[**0280**] In an alternate propulsion control strategy, the rear motors are only used when front motor power is insufficient (e.g., >44 kW electrical demand in the case of the illustrative vehicle design described herein). The conditions span a fairly short timeframe and cannot be sustained because the fuel cell is sized to deliver a maximum of 35 kW (again, in this illustrative design). In this condition, dc/dc converter **131**A is bypassed. As soon as less than full fuel cell power is required, a maximum of 29.5 kW is used for traction and the remaining 5.5 kW for charging the battery from, for example, 40% SOC to 80% SOC. The battery is thus charged at a fairly low power (5.5 kW is low load for a 35 kW battery), which improves charging efficiency because it is an efficient rate for the battery and is in an efficient output zone for the fuel cell (efficiency for a 35-kW fuel cell peaks at about 5.5 kW).

[**0281**] Having electric motors at each wheel enables a very high degree of control of vehicle dynamics. Combined with a torque-based (rather than speed-based) control strategy, this hardware/software combination offers high-resolution (in control angle and rate) traction control, braking, and stability control. The control strategy for the drive train also accommodates the extremes of driving behavior in graceful ways without having to oversize components or curtail driving performance.

[**0282**] The motor types, sizing, and configuration also contribute to the system's energy efficiency. Permanent magnet front motors located inboard of the wheels are preferably sized to be most efficient in the speed/torque range most often required by the vehicle. Since the control strategy biases the power distribution toward the front motors over the rear during cruising, these motors get more use and are thus specified to be permanent magnet motors.

[**0283**] The rear motors are preferably located in the hubs of the wheels (to improve packaging space) and are sized smaller than the front motors. These motors are used intermittently (as tasked by the propulsion controller) and are thus specified to be switched reluctance motors. This improves efficiency because there are no idling losses from exciting the magnetic fields of a permanent magnet motor.

[**0284**] An important aspect of the propulsion system of the present invention places inboard motors in the front of the vehicle and hub motors in the rear, with the front motors being more powerful than the rear motors.

[**0285**] Another important aspect of the present invention provides a power distribution approach that uses a set of high-power switches and a small dc/dc converter in contrast to the conventional approach of including a dc/dc converter sized to condition the full fuel-cell output that is then connected to a common bus.

[**0286**] Another important aspect of the present invention provides a vehicle control strategy and system sizing that addresses diverse driving scenarios. The invention achieves the goal of providing consistent, predictable driving performance under many types of driving situations by sizing the fuel cell to have a peak power sufficient to maintain highway speeds at gross vehicle mass up a 6.5% grade. The energy capacity of the load leveling device is preferably sized to be able to handle several accelerations in this circumstance (e.g., gross vehicle mass, highway speed, and 6.5% grade) and, after a certain point, to progressively reduce the power available from the load-leveling device until it is at its lowest allowable state of charge.

[**0287**] Costs savings are a significant benefit of the configuration of the power electronics components of FIG. CR**3**. In particular, in distributing electricity between the propulsion system components (fuel cell, load-leveling batteries ("LLD"), electric motors, and accessories), the configuration obviates the need to maintain a consistent bus voltage between the components. Therefore, instead of having a dc/dc converter sized to condition the entire output of the

fuel cell to be a consistent voltage (e.g., 35 kW in this case), a smaller (e.g., 5.5 kW in this case) dc/dc converter can be used just to support battery charging at any fuel-cell load and battery state of charge, and to provide fuel-cell power at less than a certain threshold (5.5 kW in the case of the illustrative design) in a voltage range that is usable by the inverters. Each component operates within a specific voltage range. The fuel cell output voltage varies with load, the LLD voltage varies as a function of several factors (including rate of discharge (voltage sags at high rates of discharge), state of charge (the voltage generally drops with state of charge), temperature (in general, lower temperatures result in a lower effective state of charge), materials, etc.), and the motors and their inverters operate within a fixed range of voltages and currents based on load required. Forcing a narrow voltage range within the power distribution network requires each component to have more sophisticated (and thus costly) power conditioning electronics. This is particularly true of the fuel cell. The present invention uses a network of switches and a small dc/dc converter to connect the fuel cell and LLD either via a bus (in which the output of the fuel cell and LLD provide power to the electric motors along the same power lines) or directly to each motor (separating the outputs of the fuel cell and LLD, thus avoiding the bus and resulting common voltage level).

[0288] The propulsion system of the present invention also improves electrical efficiency. In particular, the switching network employed to manage power distribution improves electrical efficiency because it avoids the higher efficiency losses associated with having the fuel cell output always pass through a dc/dc converter.

[0289] An important aspect of this exemplary power management system is the way in which the components are connected, i.e., the network of switches and small (e.g., 5.5 kW) dc/dc converter.

[0290] Another important aspect of this exemplary power management system is the use of the switches to avoid needing a very high power dc/dc converter that is sized to handle the maximum output of the fuel cell (e.g., 35 kW in this case).

[0291] Another important aspect of this exemplary power management system is the use of a switching logic that incorporates the state of all of the components of the system (including the motor controllers).

[0292] In addition to power management, a further aspect of the present invention provides an efficient propulsion system cooling approach for hybrid electric vehicles. This aspect of the present invention uses an electronically controlled, variable speed cooling pump, and electronically controlled valves in a common rail system architecture, to provide cooling for the fuel cell, electric motors, and traction batteries. The cooling system is integrated with the passenger compartment heater core and an in-line, hydrogen burning supplementary heater for the passenger compartment.

[0293] FIG. CR**6** illustrates an exemplary cooling system design for a powertrain system, according to an alternative embodiment of the present invention. Although other portions of this specification describe a cooling system having separate dedicated cooling circuits for each system with unique cooling loads (as shown by, for example, separate heat exchangers), this alternative embodiment of the present invention provides a cooling system that uses a single coolant circuit for all powertrain components. The system uses a common rail topology to supply coolant to the powertrain components, with the flow to each component group controlled using a single electric, variable-speed coolant pump **140** and electronically controlled thermostat valves **147**, **148**, **149**, and **150**. This system allows for each component group to be kept at different service temperatures without the need for multiple coolant pumps, heat exchangers, and cooling lines. It also allows the passenger compartment to be heated by the combined heat generated by the powertrain components.

[0294] The common rails **159** and **160** provide coolant to four branches. One branch **155** supplies coolant to front motors **116** and **117** and inverter **118**. Another branch **156** supplies coolant to the load-leveling batteries (**100**, **101**). Another branch **157** supplies coolant to rear motors **120** and **121** and their inverter **122**. The fourth branch **158** supplies coolant to fuel cell heat exchanger **113**.

[0295] An electronic control unit (ECU) **141** receives coolant temperature measurements from temperature sensors **151**, **152**, **153**, and **153**A in the branches as well as sensor **153**B and other input such as passenger compartment temperature, desired passenger compartment temperature, ambient temperature, and vehicle speed. Using these inputs, ECU **141** controls the speed of coolant pump **140**, thermostat valves **147**, **148**, **149**, and **150**, the cabin heater control valve **146**, a hydrogen-powered heater **145**, the cabin heater matrix **144**, and variable-speed, electrically driven radiator fans **156**A to properly cool the powertrain components and heat the cabin.

[0296] The exemplary coolant system design of FIG. CR**6** reduces the total mass of the cooling system compared to a system in which the various components each have their own cooling system, since the common rails avoid a number of cooling pipes, radiators, and coolant pumps. Also, efficiency gains are achieved by having pipes with larger sections (which reduces pumping losses due to friction, to variable-speed pumps, and to tightly controlled coolant flow to each component). The centralized, dynamic control of pump speed and valve positions minimize wasted pumping energy and appropriately cool each component without excess coolant flow (which avoids energy being wasted in pumping losses from pump inefficiency and friction loss in the pipes).

[0297] The system described could include fewer or more branches depending on its specific application. Issues to consider in the design of the system would include the number of components needing cooling, their specific cooling requirements, and their layout within the vehicle.

[0298] All components that manage energy within the vehicle (e.g., motors, fuel cell, batteries, power electronics, and brakes) generate waste heat that must be dissipated. In conventional vehicles, the engine generates ample waste heat that is used to supply the passenger compartment with heat. In fuel-efficient hybrid-electric vehicles, the engine alone or the engine and batteries in a hybrid-electric system generally do not generate sufficient waste heat to effectively heat the cabin in cold climates. Thus, this system captures waste heat from many sources, meaning more of the waste heat generated on board the vehicle is captured for use in heating the cabin.

[**0299**] In addition, an embodiment of the present invention includes a small in-line combustion heater **145** (in this case a hydrogen powered heater) within the cabin heating circuit to supplement the waste heat captured. This heater **145** provides both quick warm-up time and additional heating power, if necessary.

[**0300**] Overall, the cooling system of this aspect of the present invention addresses thermal management in a holistic fashion, minimizing pumping losses and using the excess heat from many components to contribute to cabin heating. Any number (the more, the better) of components can be cooled with the same cooling system. Indeed, the system is scalable.

[**0301**] As a reference, the following Table 1 lists each component of FIGS. CR**1**, CR**3**, and CR**6**, along with a brief description of the component and, in some cases, exemplary specifications.

TABLE 1

Exemplary System Components

Number	Component and Description
100, 101	Load-leveling device (LLD) The LLD includes approximately 35-kW of nickel metal hydride high power batteries that provide power to the motors and can also be used to store energy captured through regenerative braking. They are sized to provide sufficient acceleration in most driving conditions when used in conjunction with the fuel cell 110. The cooling lines and electric poles of the two modules are connected with click-on connectors. There are twenty battery modules, organized in two ten-module packs that are connected in series in order to have an open-circuit voltage of 240 volts. In an embodiment, each module is approximately 167 mm in length, 102 mm in width, 125 mm in height, weighs about 3.2 kg, and has a volume of about 2.2 liters. Other battery types such as lead acid, lithium ion, or lithium polymer could also be used.
102	LLD controller module The LLD controller module tracks battery temperature, voltage, and current flow to determine the state of charge and the flow of coolant through the modules,. In an embodiment, the LLD controller module is about 15 × 15 × 10 cm and weighs approximately 1 kg.
	cooling
103	LLD heat exchanger The LLD heat exchanger cools the battery coolant with ambient air. In an embodiment, the LLD heat exchanger is about 40 × 15 × 3 cm and weighs approximately 1 kg.
104	LLD coolant pump The LLD coolant pump circulates coolant through the battery modules and the heat exchanger. In an embodiment, the LLD coolant pump is about 6 cm in diameter and 10 cm long, and weighs approximately 0.5 kg.
105	LLD coolant expansion tank The LLD coolant expansion tank is a resevoir for the battery coolant to fill as it heats up and expands. In an embodiment, the LLD coolant expansion tank is about 10 × 10 × 10 cm and weighs approximately 0.2 kg.
107, 108, 109	Hydrogen tank system The three hydrogen tanks are preferably sized to give the vehicle a range of approximately 530 kilometers, and are located within the passenger safety cell to protect them from minor collisions and abuse and damage. In an embodiment, the tanks are type IV, 5,000 psi carbon-fiber/polymer tanks with internal pressure valves. In an embodiment, two of the tanks 107 and 108 are approximately 250 in diameter, 1000 mm long, with an internal volume of 36.7 liters, an H_2 mass of 0.84 kg, and weighs approximately 7 kg. The other tank 109 is approximately 310 in diameter, 1100 mm long, with an internal volume of 63.6 liters, an H_2 mass of 1.46 kg, and weighs approximately 12.2 kg.
	Fuel cell system
110	Fuel cell stack This PEM (proton exchange membrane) fuel-cell stack is an ambient-pressure fuel cell with a maximum power output of 35 kW. The module includes manifolds and mount points. In an embodiment, the fuel cell stack specific power is approximately 0.9 kW/kg, weighs about 38.9 kg, and is about 100 volts.
	air inlet
111	blower The blower forces air into the fuel cell. In a high pressure fuel-cell system, this would be a compressor. In an embodiment, the blower is about 20 cm in diameter and 15 cm long and weighs about 5 kg.
112	air filter This filter cleans the incoming air. In an embodiment, the air filter is about 10 × 10 × 20 cm and weighs about 1 kg.
	cooling
113	Fuel cell heat exchanger The fuel cell heat exchanger removes heat from the fuel cell stack using coolant. The coolant within the fuel-cell stack differs from the collant used in the rest of the system, so this heat exchanger is required to remove heat. In an embodiment, the fuel cell heat exchanger is about 60 × 40 × 3 cm and weighs about 5 kg.

TABLE 1-continued

Exemplary System Components

Number	Component and Description
114	fuel cell coolant pump This pump circulates coolant to the heat exchanger. In an embodiment, the fuel cell coolant pump is about 8 cm in diameter, 15 cm long, and weighs about 1 kg.
115	fuel cell coolant expansion tank In an embodiment, the fuel cell coolant expansion tank is about 15 × 15 × 10 cm and weighs about 0.5 kg.
	Electric motors Front permanent magnet motors
116, 117	Motor The front motors are preferably permanent magnet motors each with a peak power output of 21 kW peak (15 kW continuous) and a maximum torque of 88 Newton-meter (60 Newton-meter continuous). Each motor is about 165 mm in length, 200 mm in diameter, and weighs about 20 kg.
118	Inverter There is a single inverter for both front electric motors. In an embodiment, the inverter is about 380 × 350 × 118 mm and weighs about 13 kg.
119	Microcontroller In an embodiment, the microcontroller is about 245 × 161 × 40 mm and weighs about 0.53 kg.
	Rear
120, 121	Motor The rear motors are preferably switched reluctance motors with a peak power of 9 kW (~6 kW continuous) each and a maximum torque of 26 Newton-meters peak (~16 Newton-meters continuous). Switched reluctance motors are chosen because they freewheel with low inertia and no parasitic losses due to the motor's electromagnetic fields. In an embodiment, the motors are about 110 mm in length, 100 mm in diameter, and weigh about 8 kg.
122	Inverter There is a single inverter for both rear electric motors. In an embodiment, the inverter is about 165 × 350 × 118 mm and weighs about 5 kg.
123	microcontroller In an embodiment, the microcontroller is about 105 × 161 × 40 mm and weighs about 0.25 kg.
	cooling
124	motor heat exchanger In an embodiment, the motor heat exchanger about 40 × 40 × 3 cm and weighs about 3 kg.
125	motor coolant pump In an embodiment, the motor coolant pump is about 6 cm in diameter, 10 cm long, and weighs about 0.5 kg.
126	motor coolant expansion tank In an embodiment, the motor coolant expansion tank is about 20 × 10 × 10 cm and weighs about 0.5 kg.
	Reduction gears
127, 128	front In an embodiment, front gears 127 and 128 are constant mesh twin gears, weighing about 10.2 kg.
129, 130	rear In an embodiment, rear gears 129 and 130 are hub-mounted planetary gears, weighing about 3 kg.
131	dc/dc converter and switching controller 5.5 kW power output
131A	5.5 kW dc/dc converter
131B	switch 1 (three position switch with a, off, and b positions)
131C	switch 2 (three position switch with a, off, and b positions)
131D	switch 3 (three position switch with a, off, and b positions)
131E	junction 1
131F	output to switch 1
131G	output to switch 2
131H	output to switch 3
132	Low power dc/dc converter
133	42-volt battery
134	High-power diode
135	Capacitor
136	Coolant lines
137	High-voltage power cables
138	Heat exchanger at front of vehicle
139	42-volt bus
140	Coolant pump
141	Electronic Control Unit controller for the cooling system
142	Radiator heat exchanger for the integrated cooling system
143	Junction for the cabin heating bypass loop
144	Cabin heater matrix
145	Hydrogen-powered heater
146	Control valve for the cabin heater, which controls flow through the cabin heating elements

TABLE 1-continued

Exemplary System Components	
Number	Component and Description
147	Thermostatically controlled valve for the front motor coolant branch
148	Thermostatically controlled valve for the LLD
149	Thermostatically controlled valve for rear motor coolant branch
150	Thermostatically controlled valve for the fuel coolant branch
151	Coolant temperature sensor for the front motor coolant branch
152	Coolant temperature sensor for the LLD coolant branch
153	Coolant temperature sensor for the rear motor coolant branch
153A	Coolant temperature sensor for the fuel cell
153B	Coolant temperature sensor for radiator heat exchanger
155	Front motor coolant branch pipe
156	LLD coolant branch pipe
156A	Radiator fan
157	Rear motor coolant branch pipe
158	Fuel cell coolant branch pipe
159	Upper coolant common rail pipe
160	Lower coolant common rail pipe

[**0302**] System Design of Electronics and Software Architecture for Automobiles

[**0303**] This aspect of the present invention provides a software and electronics architecture for vehicles. The architecture is an all-digital information management and control architecture that is network-based and includes a central controller that interacts with modular control nodes, a user interface, and a fault-tolerant power supply and distribution system.

[**0304**] According to an embodiment of the present invention, the vehicle control system and information management architecture relies on distributed integrated control, which includes "intelligent" devices (nodes) that perform real time control of local hardware and communicate via multiplexed communications data links. Nodes are functionally grouped to communicate with a specific host controller and other devices on the host network(s). The host controller manages the objectives of devices linked to it.

[**0305**] Host controllers of different functional groups are mounted together in a modular racking system and communicate via a back plane. The back plane provides communication between the different functional controllers and the central controller. This, modular, three level architecture provides local autonomous real time control, data aggregation, centralized control of component objectives, and centralized diagnostics.

[**0306**] The central controller runs additional services and applications related to the operation of the vehicle and data communications. It also provides a seamless graphical user interface to all systems on the vehicle for operation and diagnostics.

[**0307**] According to an embodiment of the present invention, the user interface system includes an automotive man-machine interface that replaces the wheel and pedals of conventional automobiles with control-stick-based steering, acceleration, and braking. The user interface can also incorporate a jog-wheel interface for navigating, changing, and selecting vehicle features and services. In addition, the user interface can include a multi-functional flat-panel display screen for displaying information for the driver. These features improve occupant safety, environmental friendliness, ergonomics, and compatibility to modify, add, or upgrade vehicle features.

[**0308**] According to an embodiment of the present invention, the fault-tolerant power supply and distribution system is a ring-main power supply. The ring main power supply system provides fault tolerant power to all components via a ring main power bus. Nodes are connected to the ring main at one of several junction boxes distributed throughout the vehicle. Components are connected to the ring by either a sub-ring (when supplying fault-tolerant devices) or a simple branch line for non-fault tolerant nodes. The junction boxes within the ring main system are fused so that power is supplied to the branches from either leg of the ring main and so that power passes freely across the junction box during normal operation.

[**0309**] Continuing from the summary above, the following three important aspects of the software and electronics architecture of the present invention are discussed below under corresponding subheading: 1) ring main power supply; 2) control system and information management architecture; and 3) user interface.

[**0310**] Ring Main Power Supply:

[**0311**] The ring main power supply is designed to supply power to all non-traction power systems within the vehicle in a fault-tolerant way. As illustrated in FIG. D**1**, this system comprises a power bus that forms a ring **200** around the vehicle, several junction boxes **201**, **284**, **285**, **286**, **287**, and **288**, and branches **202** connecting components to ring **200** at junction components.

[**0312**] Ring main **200** is the non-traction power bus in the vehicle that delivers power to several dual-fused junction boxes that then distribute power to the vehicle's components. Dual-fused junction boxes **201**, **284**, **285**, **286**, **287**, and **288** serve as the points on ring main bus **200** at which vehicle components are connected. Branch wiring **202** connects vehicle components to dual-fused junction boxes **201**, **284**, **285**, **286**, **287**, and **288**.

[**0313**] For clarity, FIG. D**1** uses the following abbreviations: horn (ET); washer (WSR); wiper (WPR); steering

motors (M1 and M2); traction motors (TM1 and TM2); battery (BATT); left front wheel (LF); heating, ventilation, and air conditioning unit (HVAC); infra-red camera (IR); rain and thermal loading sensor (IT); control stick (CS); airbag controller (SRS ECU); trunk lock mechanism (Boot CDL); and hub motor (HM).

[0314] As shown in FIG. D1, lights **203**, **218**, **234**, and **240** connect to dual-fused junction box **286**, **287**, **201**, and **284**, respectively. Lights **203**, **218**, **234**, and **240** are light modules that contain headlights (in the case of lights **203** and **218**), parking lights, turn signals, tail lights (in the case of light **234** and **240**), and brake lights (in the case of lights **234** and **240**). Lights **204** and **217** are fog lights and connect to dual-fused junction boxes **286** and **287**, respectively.

[0315] Radar **205**, **216**, **235**, and **238** are front and rear radar sensors, which connect to dual-fused junction boxes **286**, **287**, **201**, and **284**, respectively. Radiator fan **206** and horn **207** connect to junction boxes **286** and **287**, respectively.

[0316] Coolant pumps **209** and **249** connect to junction boxes **286** and **284**, respectively.

[0317] Battery **212** powers non-traction electrical devices, and is preferably a 42-volt battery. Converter **213** is a dc/dc converter that charges battery **212** from the powertrain power bus. Converter **213** replaces the function of an alternator in conventional vehicles.

[0318] Converter **214** is a high-voltage (e.g., 5.5 kW and 300 volts) dc/dc converter used to manage power in the powertrain system. Converter **214** is connected to junction box **287**.

[0319] Steering motors **210** and **215** are electric motors that turn the front wheels.

[0320] Wiper motors **208**, **239**, and **280** connect to junction boxes **287**, **284**, and **286**, respectively.

[0321] Air compressor **211** connects to junction box **210**.

[0322] Electrically actuated brakes **220**, **230**, **243**, and **289** connect to junction boxes **287**, **201**, **284**, and **286**, respectively. Likewise, suspension shock/spring systems **221**, **233**, **244**, and **279** connect to junction boxes **287**, **201**, **284**, and **286**, respectively.

[0323] Front traction motors **281** and **283** are permanent magnet motors that power the front wheels **278** and **219**, respectively, and are connected to junction boxes **286** and **287**, respectively. The electrical connection shown powers the electronics within the motor and controller.

[0324] High voltage battery management **282** is the electronics that manage power from the load-leveling batteries in the powertrain system. High voltage battery management **282** is connected to junction box **286**.

[0325] Interior light controller module **250**, control sticks **251** and **252**, microphone **263**, air bags **264**, windscreen heater element **266**, and driver display **265** are connected to junction box **285**. Control sticks **251** and **252** control the vehicle. Microphone **263** is a driver microphone for hands-free operation of information, communication, and entertainment systems within the vehicle. Driver display **265** is a flat-panel monitor that displays driver information.

[0326] Service lock **268** is a lock for a compartment containing vehicle controller cards. User lock **269** is a lock for a compartment that contains expansion bays for the vehicle electronics system. Controller card slots **270**, **271**, **272**, **273**, **274**, **275**, **276**, and **277** are slots adapted to receive vehicle controller cards and other electronics.

[0327] Heating, ventilation, and air conditioning system **267**, infrared camera **290**, rain and thermal loading sensor module **291**, air bag controller **253**, and a second display/PDA power connection **254** are connected to junction box **288**.

[0328] Door modules **222** and **223** are connected to junction box **288**. Door modules **255** and **259** are connected to junction box **285**. Each of the door modules contains various electrical components, including door module controllers **226**, **227**, **258**, and **262**, window lift switches **224**, **228**, and **257**, window lift motors **225**, **229**, **256**, and **260**, and door locks **292**, **293**, **294**, **295**. Door module controller **259** also includes four window lift switches **261** that enable the driver to control all operable windows.

[0329] Seat belt pretensioners **246** and **247**, fuel-cell blower **245**, and fuel cell controller **248** connect to junction box **284**.

[0330] Rear hub motors **232** and **242** are preferably switched reluctance motors. The electrical connection shown powers the electronics within the motor and controller.

[0331] Rear hatchback door lock **236** and rear window defroster **237** connect to junction box **201**.

[0332] Although the system voltage of FIG. D1 is shown as 42V, the overall design of the ring-main power distribution architecture could be used with any operating voltage. There could also be more or fewer junction boxes than are depicted in FIG. D1 depending on the specific vehicle for which the system is used. Ring main **200** is preferably sized to deliver the maximum power required by all non-traction electrical loads. Devices requiring fault-tolerant power are connected to the junction boxes with a sub-ring to ensure power redundancy from the source to the component. The junction boxes within the ring main system are fused so that power can be supplied to the branches from either leg of the ring main and so that power passes freely across the junction box during normal operation (see FIG. D2 below). The ring main is powered by two power supplies: a battery **212** and a dc/dc converter **213** that draws power from the powertrain. The dc/dc converter **213** performs the function of an alternator in conventional cars.

[0333] To illustrate how the ring-main power supply would work, consider the situation in which one segment of the ring main between two junction boxes becomes shorted. This fault would be sensed by the junction boxes on either end of the segment and the fault would be isolated by activating the appropriate resettable fuses within the junction boxes so that the power for the components attached to these junction boxes would come from the other side of the ring. When a fault occurs, the junction box would send a fault code to the vehicle's central controller, which would in turn warn the driver of the fault and instruct the driver to safely stop the car and contact a technician.

[0334] FIG. D2 illustrates schematically the design of an exemplary dual-fused junction box **304**, according to an

embodiment of the present invention. Junction box **304** is connected in line with ring main **200** to two positive terminals **305** and **306** and two negative terminals **307** and **308**. Within junction box **304**, there are four "smart" fuses, two fuses **300** and **301** connected in series to the positive side (terminals **306** and **305**, respectively) of ring main **200** and two fuses **302** and **303** connected in series to the negative side (terminals **308** and **307**, respectively) of ring main **200**. A variety of technologies could be used for smart fuses **300**, **301**, **302**, and **303**, including electronically resettable mechanical fuses, smart FET solid-state fuses, resettable polymer switches, or other fusing devices. A positive terminal **309** and negative terminal **310** for the branch lines **202** are connected between fuses **311** and **312** of junction box **304**. Fuse **311** is disposed between fuses **300** and **301**. Fuse **312** is disposed between fuses **302** and **303**.

[**0335**] Thus, the ring main power supply of the present invention is designed to supply power to all non-traction power systems within the vehicle in a fault-tolerant way. As illustrated in FIG. D**1**, this system comprises a power bus that forms a ring around the vehicle, several junction boxes, and branches connecting components to the ring at junction components. This bus is sized to deliver the maximum power required by all non-traction electrical loads in the vehicle via a series of junction boxes to which branch lines to the devices are connected. Devices requiring fault-tolerant power are connected to the junction boxes with a sub-ring, to ensure power redundancy from the source to the component.

[**0336**] The ring main power supply of the present invention offers several benefits. For example, the ring main power supply provides fault-tolerance. The failure of any one power source, node, or transmission cable (i) does not result in a loss of power within the vehicle and (ii) can be readily diagnosed so that the driver can be quickly notified of a system fault. In terms of cost, because power is supplied-throughout the vehicle using a bus architecture, there is less duplicative wiring. In terms of fuel economy, the ring main power supply, depending on its configuration, has the potential to weigh less than conventional wiring harnesses used in automobiles. In terms of modularity, new devices requiring fault tolerance can be plugged into the system without extensive rewiring. As a final example, in terms of diagnosability, the intelligent nodes within the ring main can relay information regarding the performance of the system, including faults, to the user interface and to other systems within the vehicle.

[**0337**] Control System and Information Management Architecture:

[**0338**] As shown in FIGS. D**3**-D**10** below, the control system and information management architecture of the present invention includes: 1) a central controller; 2) a body controller; 3) a vehicle dynamics controller; 4) a telematics controller; 5) several task-specific multiplexed networks; 6) a high-speed backbone that connects the main functional controllers (i.e., items 1-4); and 7) several component controllers distributed throughout the car and mostly co-located and integrated with the components that they are controlling.

[**0339**] FIG. D**3** is an electrical schematic that illustrates exemplary connections **313** between the vehicle safety systems of the power distribution network of FIG. D**1**, according to an embodiment of the present invention. As shown, connections **313** provide a vehicle safety system that includes seat belt pretensioners **246** and **247**, electronic control unit **253**, and air bags **264**.

[**0340**] FIG. D**4** is an electrical schematic showing exemplary hard-wired inputs **314** to slot **270** of the central controller of FIG. D**1**, according to an embodiment of the present invention. Other components could be added or some components could be removed, as necessary. As shown, hard-wired inputs **314** to slot **270** connect microphone **263**, front radar sensors **205** and **216**, and rear radar sensors **235** and **238**.

[**0341**] FIG. D**5** is an electrical schematic showing body controller wiring **315** to slot **271** of the central controller of FIG. D**1**, according to an embodiment of the present invention. As shown, wiring **315** connects the following body controller controls: lights **203**, **218**, **240**, and **234**; coolant pumps **209** and **249**; radiator fan **206**; air compressor **211** for the suspension system; 42-volt dc/dc converter **213**; windshield wiper motors **280**, **208**, and **239**; front and rear windscreen defrosters **266** and **237**; door modules **259**, **222**, **223**, and **255**; rear hatch lock **236**; heating and cooling system **267**; infrared camera **290**; and a rain and thermal loading module **291**.

[**0342**] FIG. D**6** is an electrical schematic showing exemplary controller area network (CAN) wiring **316**, according to an embodiment of the present invention. CAN wiring **316** connects to the vehicle dynamics controller card slot **272** of the central controller of FIG. D**1**. As shown, CAN wiring **316** connects the following vehicle dynamics components to slot **272**: electric traction motors **281**, **283**, **232**, and **242**; suspension **221**, **233**, **244**, and **274**; and the 5.5 kW powertrain dc/dc converter **214**. Although a CAN network is specified in this exemplary design, one of ordinary skill in the art would appreciate that other network protocols could be used.

[**0343**] FIG. D**7** is an electrical schematic showing exemplary fault tolerant network wiring **317**, according to an embodiment of the present invention. Fault tolerant wiring **317** connects to the vehicle dynamics controller card slot **272** of the central controller of FIG. D**1**. As shown, fault tolerant wiring **317** connects the following vehicle dynamics components to slot **272**: control sticks **251** and **252**; airbag electronic control unit **253**, brakes **220**, **230**, **243**, and **289**; and steering motors **210** and **215**.

[**0344**] FIG. D**8** is an electrical schematic showing exemplary telematics control wiring **318**, according to an embodiment of the present invention. Telematics control wiring **318** connects to the telematics controller card slot **273** of the central controller of FIG. D**1**. As shown, telematics control wiring connects antennae **318**A to slot **273**. Antennae **318**A are preferably printed in the rear and side windows of the vehicle.

[**0345**] FIG. D**9** is an electrical schematic showing exemplary audio amplifier wiring **319**, according to an embodiment of the present invention. Audio amplifier wiring **319** connects to the audio amplifier located in slot **274** of the central controller of FIG. D**1**. As shown, audio amplifier wiring **319** connects the following audio components to slot **274**: left front speaker **319**A, center mix speaker **319**B, right front speaker **319**C, bass unit **319**D, left rear speaker **319**E, and right rear speaker **319**F.

[0346] FIG. D10 is an electrical schematic that depicts an overall controller and network architecture, according to an embodiment of the present invention. The controllers shown in FIG. D10 are located in separate slots of a controller console **320** within the vehicle (corresponding to slots **270-277** in FIG. D1). The controllers are connected to each other via a high-speed data backbone **327**. The body controller **321** controls body components via a low-speed CAN network (or similar network) **324**. The components to which body controller **321** is connected are shown in FIG. D5. The vehicle dynamics controller **323** controls powertrain, steering, suspension, and braking. The vehicle dynamics components connected to controller **323** through a high-speed CAN network **325** are shown in FIG. D6. The vehicle dynamics components connected to controller **323** through a time-triggered protocol (TTP/C) network **326** are shown in FIG. D7. Expansion cards can also be added until all controller console slots are filled.

[0347] As shown in FIGS. D3-D10, the control system and information management architecture of the present invention includes: 1) a central controller; 2) a body controller; 3) a vehicle dynamics controller; 4) a telematics controller; 5) several task-specific multiplexed networks; 6) a high-speed backbone that connects the main functional controllers (i.e., items 1-4); and 7) several component controllers distributed throughout the car and mostly co-located and integrated with the components that they are controlling.

[0348] According to an embodiment of the present invention, the central controller controls the user display, performs vehicle-level diagnostics, manages vehicle data storage (both on-board and off-board through the telematics controller), and has the capability to run add-on applets.

[0349] According to an embodiment of the present invention, the body controller is a relatively simple controller that sends control signals to all of the body electrical components (interior and exterior lighting, door locks, window lifts, windshield wipers, etc.) and performs simple diagnostics to ensure that the various components are operating properly.

[0350] According to an embodiment of the present invention, the vehicle dynamics controller manages, at the top-level, all vehicle dynamics and powertrain functions, including braking, acceleration, steering, and suspension behavior. The vehicle dynamics controller communicates with braking and steering components using a TTP/C (or similar) fault tolerant network, and has greater real-time control requirements than other controllers.

[0351] According to an embodiment of the present invention, the telematics controller manages all communication with the outside world. Telematics controller could include, for example, a GPS and one or more wireless communications devices (e.g., mobile telephone or wireless Ethernet) as needed. This telematics controller receives requests for off-board data from other controllers and receives this work using the most appropriate method given the vehicle's position.

[0352] According to an embodiment of the present invention, the task-specific multiplexed networks include a low-speed controller area network (CAN) for the body controller to communicate with the devices under its control, a high-speed CAN for the vehicle dynamics controller to ensure that the propulsion commands are received in a timely fashion, and a fault tolerant TTP/C network for communicating with the steering and braking functions.

[0353] According to an embodiment of the present invention, the high-speed backbone connects the main controllers (i.e., central controller, the body controller, the vehicle dynamics controller, and the telematics controller) in a data bus similar in concept to the PCI bus used in personal computers. This configuration allows the main controllers to communicate and share data quickly and efficiently. It also allows the controllers to be upgraded more easily since they would be located together and they would communicate between each other using a standard interface.

[0354] According to an embodiment of the present invention, several component controllers are included in the control system and information management architecture. The main controllers described above communicate with these component controllers via the various on-board networks to execute the tasks assigned to them by the central controllers and are integrated with the components that they are controlling.

[0355] To illustrate how information and control are managed within the vehicle, consider the instance of controlling the rear corner light module. The rear corner light module includes the reverse light, tail light, turn signal, brake light, and (in one of the two modules) license plate light. The rear corner light module is controlled by the body controller via a low-speed CAN (Controller Area Network) bus. The body controller receives control inputs from various other controllers and components connected to it via the CAN bus (e.g., braking signal from the vehicle dynamics controller, turn signal from switch modules connected to the low-speed CAN network, and running-light control from either the central controller or a low-speed CAN switch module).

[0356] When braking is initiated, the vehicle dynamics controller sends a signal across the high-speed data bus to the body controller, which in turn instructs the rear light modules to illuminate the brake lights. At the end of the braking event, the vehicle dynamics controller notifies the body controller of the change in state, which then relays the command to turn off the brake lights to the rear corner light modules. If any fault occurs (e.g., if the light modules detect a failure or if the body controller loses contact with the light module), then the body controller announces the fault to the central controller via the high-speed backbone.

[0357] Upon receipt of a fault-notice, the central controller would log the fault and, if appropriate, illuminate a warning light on the driver display. In addition, if any alternative control algorithms were available, the central controller would initiate them. For instance, if the turn signal malfunctions, the central controller could have the brake, reverse, and/or running lights blink when the turn indicator is activated. The central controller could also carry out more diagnostics to isolate the fault, such as monitoring electrical power consumption during braking or checking control signals, to determine whether the fault is a communication, power supply, or component failure.

[0358] According to an embodiment of the control system and information management architecture, different components on the vehicle collect data continuously during operation. This data can be combined to create knowledge about the car's behavior and about its environment. Combining

data from different sources on the vehicle can create new functionality. This capability relies on the use of open architectures and structured, hierarchical controls.

[0359] The use of multiplexing reduces wiring and provides greater flexibility. By using a data network on board, the amount and complexity of wiring is greatly reduced. It also allows flexible, high-speed communication between devices located throughout the vehicle, which provides greater capability with less wiring than in conventional cars. For instance, typical vehicles have twenty-five wires on the through-panel connector to a door. An embodiment of the present invention reduces the number of wires to four.

[0360] Further, using network communications makes it far easier to make changes, upgrade, and tailor a vehicle to different customer requirements. This is because functionality is not tied to specific wires or control module input/output ("I/O"). Thus, the majority of changes can be made without redesigning specific controllers, interfaces, or harnessing.

[0361] With data being shared between different systems, one device can also perform a number of functions in the vehicle. For instance, a charge-coupled-device-type video camera with infrared capability could be used for driver recognition, videophone link, smart air bag control, and driver attention measurement.

[0362] Similarly, sharing knowledge between different systems on the vehicle makes it possible to reduce sensing requirements. For instance, it would be possible to interpret elevation from GPS data. This means that there may be no need for a barometric sensor on the vehicle propulsion system control.

[0363] The control system and information management architecture of the present invention also provides a desired fault tolerance. Certain aspects of the electrical system are critical to safe operation of the vehicle and thus functional failure cannot be tolerated. Time Triggered Protocol ("TTP/C") is adapted to communications between safety critical sub-system components. Practically, the protocol employs data time slotting to ensure deterministic latency periods, has redundant data connections, and message-level error control to protect from data stream failure. Additional protection from failure can be achieved by incorporating redundancy within the system design. For example, twin motors can be used to control the steering system. As another example, the 42-V battery and the dc/dc converter can be used to supply electrical power to the low voltage power bus.

[0364] The control system and information management architecture of the present invention also provides desired diagnostics and fault management. Similar to the function of electronics systems in typical vehicles, all components of the electrical system of the present invention continually check for correct operation and communications to ensure proper electrical system performance. Any detected malfunctions are interpreted by the central controller and communicated to the user. Preferably, the system is further designed so that the appropriate fault mitigation strategy is implemented at the component and/or system level to ensure a safe system response to the failure. This strategy only detects electrical failures but similar, observer-based logic can be used to check performance of physical items such as steering motors. For example, an under-inflated tire can be detected by the central controller by comparing the four wheel-speed signals. When such a fault is detected, the central controller can warn the driver of the low tire pressure and adapt the vehicle dynamics to best cope with the fault condition.

[0365] The control system and information management architecture of the present invention also provides desired prognostics. The performance of many items on the powertrain degrades with use. The life expectancy can be derived statistically in many cases or otherwise observed from changes in performance over time. By tracking the loads that a component has been subjected to during its life and by tracking changes in performance, it will be possible to calculate the life remaining in each high-value component. With this data, it will be possible to schedule component exchange prior to failure, which should reduce running costs by minimizing scheduled and unscheduled maintenance.

[0366] Further, components such as motors can be more readily re-manufactured if the unit has not suffered total failure. Thus, there is more value in the used motor that has not failed.

[0367] It is also possible to make a data-based valuation of the vehicle by interrogating the condition of the tracked components. This would be useful in maintaining second hand value or recovering useful value from a vehicle at the time of disposal.

[0368] With prognostics data, maintenance activities and costs can also be planned.

[0369] Statistical data on use and wear rate can also be recorded for an entire fleet of vehicles over time to enable redesign for improved component life.

[0370] The control system and information management architecture of the present invention also facilitates desired new services. Indeed, data communication between different systems on the vehicle and the outside world can enable new services and features.

[0371] For example, an embodiment of the present invention provides a smart fuel gauge. The navigation system (which includes, for example, map data, a GPS, a database of filling station locations and opening hours, and trip routing system) is integrated with the fuel level monitor and the fuel consumption tracking system to provide a fuel gauge that indicates the driver's risk of running out of fuel, not just fuel level. For example, if car has **150** miles of remaining range but there are no filling stations along the vehicle's route, the gauge will give a warning showing where the nearest filling stations are and provide directions with how to get there.

[0372] Data based insurance is another example of a new service facilitated by the present invention. The cost of cover can be based on actual driving behavior. For instance, the insurance rate could be charged by the number of miles driven and when those occurred and/or driving style.

[0373] Traffic data collection is another example of a new service facilitated by the present invention. Location, speed, and traffic density data can be collected and transmitted off board to a central data repository. This data can be used to provide real-time traffic flow and historical data to be used in navigation and traffic management systems.

[0374] The present invention can also facilitate crash emergency calls. Upon detecting a crash, the system notifies the emergency services of the incident automatically. This call can include information such as crash speed, deceleration force, and number of occupants.

[0375] Contract re-fuelling is another example of a new service facilitated by the present invention. The vehicle could transmit its fuel level and location to a refueling contractor that would use this data to schedule deliveries on a local fuelling service.

[0376] Remote monitoring and control is another example of a new service facilitated by the present invention. Being connected to the Internet, it would also be possible for the driver to check system status remotely and to perform certain operations off-board such as vehicle cool down or warm up.

[0377] The present invention also facilitates new aspects of fleet control. Fleet logistics can be optimized and directed remotely according to changing requirements.

[0378] The present invention also facilitates remote diagnostics. The vehicle continuously monitors itself for irregular operation on the vehicle. Any such irregularities can be diagnosed from a remote service center.

[0379] The present invention also facilitates voice-activated "emergency" keyless entry. The vehicle can wait to hear a unique (pre-programmed) password to get into the vehicle without a key in an emergency. The system would be activated to listen for the password (or perhaps for a voice-print of the vehicle's owner) by the individual seeking entry by, for example, lifting on the door handle. The microphone inside of the car would listen for the appropriate password and unlock the door if it is spoken. The driver could then reset the password after entering the vehicle.

[0380] Notably, the software and electronics architecture of the present invention is capable of supporting all of these features without requiring added hardware. Further, the total integration of all of the components makes these services, and others not yet considered, more valuable to the user, more capable, and easier to implement.

[0381] The control system and information management architecture of the present invention also facilitates several security features. In one embodiment, the vehicle has voice recognition and an optional camera. These devices can be used for driver recognition. The two biometrics: voice print and face print, provide a high level of security against theft. Positive driver identification can be particularly useful to fleet operators.

[0382] In another embodiment, drivesystem components are tracked by a unique serial number that is used for life prediction. This has the additional benefit of making these devices traceable and thus very difficult to re-use after theft. This same capability can be used to protect after-market operations.

[0383] In another embodiment, when a crash has been detected, the systems on the vehicle can record data such as driver attention, vehicle speed, position, driver inputs, vehicle system status, and global time. This data is sampled continuously at high speed and recorded only upon detection of an incident. The data is preferably center-triggered to give pre and post-crash data.

[0384] Another embodiment provides longer-term monitoring and recording of characteristic driving events, such as number emergency stops, speeding, and number of near miss situations.

[0385] The control system and information management architecture of the present invention also facilitates advanced control. The data rich architecture and centralized processing power enables advanced control methods to be used such as model-based control, adaptive control, and observer-based diagnostic systems.

[0386] One example of this advanced control is the optimized dynamic control of the drive train. In this embodiment, the vehicle tracks steering angles, vehicle yaw, vehicle speed, surface smoothness (from changes in pressure in the suspension rams), corner weights (from average pressure in suspension rams), cornering angle from instantaneous suspension position (ram air pressure), cornering forces (from body controller) and possibly weather conditions from the rain sensor. All of this data can be used to best control the torque at each wheel and thus optimize dynamic control of the vehicle under all conditions. This system provides the opportunity to have such sophisticated control without additional hardware costs. Further, the vehicle's fully electric brakes and traction motor control allows far greater response and resolution of control in comparison to conventional power train systems.

[0387] The control system and information management architecture of the present invention also provides a desired upgradability and expandability. The choice of relevant open architectures and the modular design philosophy make it possible to upgrade the vehicle during the course of its life with new hardware and software to change its capability to suit the needs of the user.

[0388] User Interface:

[0389] According to an embodiment of the present invention, the user interface includes a flat-panel display screen mounted at the base of the windshield centered on the driver's line of sight, a control pad that includes four buttons and a multifunctional jog-wheel, and a side-stick control. The upper half of the flat-panel screen displays all legally mandated driver information (such as vehicle speed, lane change indication, warning lights, and fuel level) as well as climate control and entertainment system status (such as fan speed and radio settings) and a message center for putting up additional information such as navigation information or directions to filling stations. The lower half of the screen is a multipurpose area used for making setting changes to any of the vehicle systems (including, for example, radio, navigation, and climate control) and is activated by either voice commands or using the buttons and jog wheel on the control pad.

[0390] FIG. D11 illustrates an exemplary user interface according to an embodiment of the present invention. In particular, FIG. D11 shows preferred positions of the main user interface controls in the vehicle. As shown, control sticks **251** and **252** (also referred to as side sticks) are located on adjustable armrests to either side of the driver. An information console and display screen **265** is located at the base of the windshield centered on the drivers line of sight. A control pad **328** is disposed in the center console between the driver's and passenger's seat, which is used to control

services offered by the vehicle (such as entertainment, information, or driver settings).

[0391] FIG. D12 is a schematic diagram of an exemplary driver's display screen, according to an embodiment of the present invention. The bottom half **337** of the screen is a multi-functional control panel area where vehicle services (such as entertainment, climate control, or navigation services) can be set. A divider **341** separates the multi-functional control panel **337** from the instrument panel. Dedicated space for warning lights could be placed in this divider area. The left side of the instrument panel contains a message center **329** that shows the vehicle's direction **339**, an odometer **338**, and driver messages in the main portion of the message center.

[0392] In this exemplary screen, a smart fuel gauge **330** is also included. The smart fuel gauge assesses the driver's risk of running out of fuel by tracking fuel level, rate of fuel consumption, time of day, proximity to fueling stations, intended destination, and other relevant factors to provide a more complete assessment of risk associated with running out of fuel. This function is made possible by the underlying electronics architecture that allows for navigation, vehicle, and external data to be integrated into a single feature. The illustration in FIG. D12 shows a conceptual map **330** of the nearest three filling stations relative to the vehicle.

[0393] In the middle of the instrument panel area is a speed indicator **340**, a gear indicator **331**, a fuel level indicator **332**, a fuel economy display **335**, and a gauge **336** that shows the instantaneous power used by the system and the total power available. On the right side of the instrument panel, a climate control status **333** and an entertainment status **334** are displayed.

[0394] FIG. D13 is a schematic diagram of an exemplary entertainment display screen **342** according to an embodiment of the present invention. Entertainment display screen **342** could be used, for example, to select a media source (e.g., MP3, radio, or CD), adjust audio settings (e.g., amp or amplifier), or control the media sources by picking songs or changing the radio station. Screen **342** uses the multi-function display panel area **337** (FIG. D12) to make these settings.

[0395] FIG. D14 is a schematic diagram of an exemplary navigation display screen **343** according to an embodiment of the present invention. In this example, navigation control panel **343** provides turn-by-turn directions in the instrument panel area **344** (corresponding to message center **329** of FIG. D12).

[0396] FIG. D15 is a schematic diagram of an exemplary climate control display screen **345** according to an embodiment of the present invention. In this example, climate control display screen **345** display settings for fan speed, temperature, vent location, recirculation, and defrost. Any changes in the control panel are reflected in the climate area of the instrument panel **333** (see FIG. D12).

[0397] FIG. D16 is a schematic diagram of an exemplary ride setting display screen **346** according to an embodiment of the present invention. In this example, ride setting display screen **346** displays suspension settings. The driver can select between automatic operation, high, low, or normal suspension ride height, and the ride character (economy, comfort, or sport).

[0398] FIG. D17 is a schematic diagram of an exemplary guide display screen **347** according to an embodiment of the present invention. In this example, guide display screen **347** illustrates a sample page of an online user's guide that explains various methods of input. Any information typically found in a car's user manual could be accessed via this guide display screen **347**.

[0399] FIG. D18 is a schematic diagram of an exemplary identity setting display screen **348** according to an embodiment of the present invention. Through this screen **348**, a user can set the car's look and feel and the driver's identity. This exemplary screen **348** includes a voice print ID for security, the ability to change different display and sound themes, and to register with insurance providers for new knowledge-based insurance systems.

[0400] FIG. D19 is a schematic diagram of an exemplary diagnostics setting display screen **349** according to an embodiment of the present invention. One general concern in having more integrated diagnostics and communication with off-board sources is the loss of privacy. People become concerned that personal information is being used without their knowledge. To address this concern while still offering useful diagnostic capability, the present invention puts the collection of data and the recipients of the data known under the control of the driver. The rules list **350** of diagnostics setting display screen **349** contains suites of diagnostics that are being performed and lets the user choose which data is collected and how frequently. The hosts list **351** of diagnostics setting display screen **349** lists the recipients of the data and allows the user to choose what data the hosts receive and whether the data is received anonymously or not.

[0401] FIG. D20 is a schematic diagram of an exemplary intervention settings display screen **353** according to an embodiment of the present invention. The intervention system in the vehicle improves safety by limiting driver distractions based on the context of driving. For instance, during hard braking or acceleration, turning, or other driving circumstances in which the driver's attention should be focused on the task of driving, the vehicle's intervention system would hold incoming phone calls, any non-time-critical warning messages, and, at times, even mute any audio. The intervention monitor would also be able to manage how incoming information is presented to the user and determine what to do in the case of an accident. Intervention settings display screen **353** displays the notification options in area **355**. The amount of intervention carried out would also be user-settable. In this example, a simple slider bar **354** determines the level of intervention.

[0402] FIG. D21 is a schematic diagram of an exemplary plug-ins setting control panel **355** according to an embodiment of the present invention. Additional software modules could be added by the user to add features to the car. Some potential features include: more advanced system diagnostics (e.g., "Hypercar System Monitor"); a filling station locator; real-time insurance that bills according to how, when, and where the driver is driving; a mobile weather station that tracks the vehicle's position and environmental data such as temperature, humidity, whether the wipers are activated (i.e., whether it is raining), and other environmental variables that would be sent anonymously to a central weather monitoring company; a mobile traffic node that would send position and speed information to a central

traffic monitoring service; and automatic upgrade notification. Other new services could also be added to this list.

[**0403**] FIG. D**22** is a schematic diagram of an exemplary energy settings control panel **357**A according to an embodiment of the present invention. Energy settings control panel **357**A allows the user to set the powertrain control strategy between economy and sport modes using a slider bar **357**B. Panel **357**A also allows the user to adjust the smart fuel gauge settings **357**C between how much advance warning the gauge gives the driver before the vehicle could either run out of fuel or get out of range of a filling station.

[**0404**] FIG. D**23** is a schematic diagram of an exemplary side stick **358** and control pad **370**, according to an embodiment of the present invention. Side stick **358** and control pad **370** are the main physical interfaces for user input to the vehicle. Side stick **358** (also referred to as a control stick) is used to steer the vehicle and control its acceleration and raking (see FIG. D**24** below). Control pad **370** in the vehicle's center console contains four selection buttons **359** and a jog-wheel menu selection device **360** that rolls forward and back and presses down to make a selection. The selection buttons allow the user to see the navigation, climate control, entertainment, and settings control panels that can then be navigated using the jog-wheel, and as shown in FIGS. D**12**-D**22** above.

[**0405**] FIG. D**24** is a schematic diagram illustrating an exemplary method for actuation of side stick **358**. As shown, side stick **358** actuates left **372** and right **374** to steer the vehicle. Side stick **358** also has pressure sensors **376** and **378** that measure forward and back pressure, respectively, on the stick, and adjust the vehicle speed accordingly. The exemplary method of FIG. D**24** shows braking in response to forward pressure on the stick and acceleration if the stick is pulled back. This configuration could, of course, be reversed depending on the market requirements and other considerations.

[**0406**] As shown in FIG. D**23**, an exemplary control pad **370** contains four selection buttons **359**. In an embodiment of the present invention, selection buttons **359** are allocated to climate, navigation, entertainment, and settings. Pushing any of these buttons toggles the settings screen for that area in the lower half **337** of the flat panel display (see FIG. D**12**). When the settings screen is activated, the jog-wheel is used to navigate through the settings and is pressed to make selections. FIG. D**25** lists the first two levels of an illustrative hierarchical feature list and a menu list for an illustrative jog-wheel control.

[**0407**] As shown, the entertainment button includes four menus (radio, CD, MP3, and amplifier settings), each with corresponding submenus. In an embodiment of the present invention, when the entertainment button is pressed, the active music source is automatically activated. For example, if the driver is listening to an MP3, then the MP3 menu is highlighted when the entertainment button is pressed.

[**0408**] As shown, the climate button includes six menus (fan speed, temperature, position, recirculation, heated windshield, and heated rear screen), with one submenu (for the position menu, including head, body, feet).

[**0409**] The navigation button includes five menus (destination, store, ETA, trip, and settings). The destination menu has a submenu (new, stored, home, and fuel station). The trip menu has a submenu (mpg, range, trip reset, and average speed). The settings menu has a submenu (direct/scenic, miles/kilometers, and volume).

[**0410**] The settings button includes seven menus (ride, guide (online manual), identity, diagnostics, intervention, plug-ins, and energy), with corresponding submenus as shown.

[**0411**] To illustrate the operation of the user interface, consider the scenario of the driver wanting to lower the temperature in the car using the jog wheel and screen interface. Under normal operation, the lower half of the display screen would be blank (as shown in FIG. D**12**). To decrease the temperature, the driver would follow the process shown in FIG. D**26** and described below.

[**0412**] In step DX**1**, the driver presses the climate button, which causes the climate settings screen to appear on the lower half of the screen. In step DX**2**, the driver rotates the jog wheel one notch forward, which highlights the temperature adjustment bar from the list of other climate control settings. In step DX**3**, the driver presses the jog wheel, which selects the temperature adjustment bar. In step DX**4**, the driver rotates the jog wheel back, which raises and lowers the climate control temperature. In step DX**5***a*, if the driver does nothing else, the temperature setting is recorded and after a short time the climate setting screen is turned off automatically. The process is then complete.

[**0413**] Steps DX**5***b* and DX**5***c* are alternatives to step DX**5***a* in which the driver elects to do something after step DX**4**. In step DX**5***b*, if the driver presses the climate button, the climate setting screen disappears immediately with the new setting recorded. In step DX**5***c*, if the driver presses the jog wheel, the temperature adjustment bar is deselected (with the temperature change recorded) so that the driver can select another climate control setting to adjust (e.g., fan speed).

[**0414**] According to an embodiment of this aspect of the present invention, two side sticks are provided for steering, braking, and acceleration, but only one is functional at any one time. Moving either side stick to the left or right steers the vehicle left or right. Pressing the stick forward and back brakes and accelerates the vehicle. The stick does not actuate forward and backward, but rather senses forward and backward pressure and adjusts braking and acceleration based on applied pressure (as shown in FIG. D**24**).

[**0415**] The exemplary user interface of the present invention offers several benefits relating to the side stick steering, braking, and acceleration. These benefits relate to safety, fuel economy, and cost.

[**0416**] In terms of safety, centralizing control of steering, braking, and acceleration into one control stick allows for simpler execution of complex driving maneuvers such as those required during emergency collision-avoidance maneuvers. Studies have shown that the average driver is not particularly well eye-hand-foot coordinated, which is required during emergency driving using a steering wheel and pedals.

[**0417**] In addition, the steering column and pedals are the leading sources of injury in accidents. Using a side stick removes these systems from the vehicle.

[0418] Since pedals do not have to be reached, there is no fore-aft adjustment of the seats. Therefore, very small drivers remain a safe distance from the driver's airbag.

[0419] Overall, crash safety is also improved due to the additional time allowed to decelerate the driver.

[0420] In terms of fuel economy, mass savings attributable to the side stick system result from removing the fore-aft seat adjustment and removal of the cross-car beam that is typically used to support the steering column.

[0421] In terms of cost, there is less development cost associated with the airbag system because the driver's airbag is the same specification as the passenger's airbag. In addition, converting the vehicle between right- and left-hand drive is simpler because there is no steering column.

[0422] The jog-wheel-based accessory controls of the exemplary user interface of the present invention also provide benefits. These benefits relate to ease-of-use, safety, cost, and flexibility. In terms of ease-of-use, the jog-wheel-based accessory controls represent an intuitive input device that many people are familiar with because its wide use in personal computing and cell phones. In terms of safety, the jog-wheel-based accessory controls allow a driver to search for a desired button among a panel of buttons without taking her eyes off the road. The jog-wheel also has the potential to be lower cost than a panel full of switches. In terms of flexibility, any new service or feature added to the vehicle can use the jog wheel as its input device, thus simplifying the addition of features or services.

[0423] As described above, important aspects of this embodiment of the present invention include: fault-tolerant ring-main-based power distribution network; jog-wheel-based control of vehicle accessories (radio, navigation, climate control, etc.) and other services; smart fuel gauge; tracking and off-board storage of vehicle and component use information in order to assess amount of life left in components and to carry out other data services such as cross-cutting diagnostics for an entire fleet of vehicles; design of the graphical user interface; use of integrated data management to provide enhanced reliability, function, and multiple redundancy modes; and tailorability and upgradability.

[0424] The foregoing disclosure of the preferred embodiments of the present invention has been presented for purposes of illustration and description. It is not intended to be exhaustive or to limit the invention to the precise forms disclosed. Many variations and modifications of the embodiments described herein will be apparent to one of ordinary skill in the art in light of the above disclosure. The scope of the invention is to be defined only by the claims appended hereto, and by their equivalents.

[0425] Further, in describing representative embodiments of the present invention, the specification may have presented the method and/or process of the present invention as a particular sequence of steps. However, to the extent that the method or process does not rely on the particular order of steps set forth herein, the method or process should not be limited to the particular sequence of steps described. As one of ordinary skill in the art would appreciate, other sequences of steps may be possible. Therefore, the particular order of the steps set forth in the specification should not be construed as limitations on the claims. In addition, the claims directed to the method and/or process of the present invention should not be limited to the performance of their steps in the order written, and one skilled in the art can readily appreciate that the sequences may be varied and still remain within the spirit and scope of the present invention.

What is claimed is:

1. An automobile vehicle structure comprising:

a safety cell made of an advanced composite;

a subframe disposed forward of the safety cell and attached to the safety cell; and

a front crush structure disposed forward of the subframe and attached to the subframe and the safety cell.

2. The automobile structure of claim 1, wherein the subframe is made of aluminum.

3. The automobile structure of claim 1, wherein the front crush structure includes an A-pillar upper member that spans the subframe and attaches the front crush structure to the safety cell.

4. The automobile structure of claim 1, wherein the front crush structure is made of an advanced composite.

5. The automobile structure of claim 1, wherein the advanced composite is a highly aligned reinforcement of one of carbon, glass, and aramid fibers in a suitable polymer matrix of one of thermoset resins and thermoplastic resins.

6. The automobile structure of claim 1, wherein components of the safety cell are joined using blade and clevis joints.

7. The automobile structure of claim 1, wherein the safety cell comprises:

a rear floor having a forward portion, middle portion, and rear portion, and a left side and a right side;

a firewall upper attached to the front portion of the rear floor;

a B-frame attached to the middle portion of the rear floor;

a C-frame attached to the middle portion of the rear floor, wherein the C-frame is closer the rear portion of the rear floor than the B-frame;

a left bodyside attached to the firewall upper, the B-frame, the C-frame, and the rear floor;

a right bodyside attached to the firewall upper, the B-frame, the C-frame, and the rear floor;

a tailgate ringframe attached to the left bodyside, the right bodyside, and the rear portion of the rear floor;

a firewall lower attached to the left bodyside, the right bodyside, and the firewall upper;

a main floor attached to the left bodyside, the right bodyside, the rear floor, and the tailgate ringframe;

a roof attached to the left bodyside, the right bodyside, the B-frame, the C-frame, and the tailgate ringframe;

a screen surround attached to the firewall lower, the left bodyside, the right bodyside, and the roof;

a left bodyside wedge attached to the left bodyside, the firewall upper, the firewall lower, and the floor; and

a right bodyside wedge attached to the right bodyside, the firewall upper, the firewall lower, and the floor.

8. The automobile structure of claim 7, wherein the B-frame and the C-frame are attached to the left bodyside and the right bodyside using advanced composite blade and clevis joints.

9. The automobile structure of claim 7, wherein the screen surround includes blades that attach to a clevis of the left bodyside and the right bodyside.

10. The automobile structure of claim 7, wherein the left bodyside and the right bodyside have clevis assembly interfaces adapted to join blades of components that join the left bodyside and the right bodyside.

11. The automobile structure of claim 7, wherein the left bodyside and the right bodyside are made of an advanced composite and have a foam sandwich core.

12. The automobile structure of claim 1, further comprising an exterior skin applied over the safety cell, the subframe, and the front crush structure, wherein the exterior skin is made of an unreinforced thermoplastic.

13. An automobile suspension component comprising a member having a closed cross-section, and wherein the member is made of an advanced composite.

14. The automobile suspension component of claim 13, wherein the closed cross-section is substantially equal to the maximum internal volume for a given surface.

15. The method of claim 13, further comprising a mechanical interface made of a sleeve type single lap bonded metallic insert.

16. The method of claim 13, wherein the advanced composite is a highly aligned reinforcement of one of carbon, glass, and aramid fibers in a suitable polymer matrix of one of thermoset resins and thermoplastic resins.

17. A suspension and traction motor unit comprising:

a trailing arm made of an advanced composite, wherein the trailing arm has a housing;

a motor mounted within the housing;

a transmission attached to housing and coupled to the motor;

a brake assembly coupled to the transmission, wherein the transmission is disposed between the trailing arm and the brake assembly; and

a suspension strut attached to the trailing arm.

18. The suspension and traction motor unit of claim 17, wherein the trailing arm has an integrally molded bushing adapted to attach the suspension and traction motor unit to a vehicle structure.

19. The method of claim 17, wherein the advanced composite is a carbon fiber reinforced polymer.

20. The method of claim 17, wherein the motor is a hub motor.

21. The method of claim 17, wherein the transmission is a step down epicyclic gearbox.

22. A powertrain system for a fuel cell hybrid-electric vehicle comprising:

a fuel cell having a positive terminal and a negative terminal, wherein the negative terminal is grounded;

a diode in communication with the positive terminal of the fuel cell;

a capacitor in communication with the diode and the negative terminal of the fuel cell;

a load-leveling battery module having a positive terminal and a negative terminal, wherein the negative terminal is grounded;

a low voltage dc/dc converter;

a front inverter;

a rear inverter;

a controller having a junction in communication with the diode and the low voltage dc/dc converter, wherein the controller has a high voltage dc/dc converter, a first bi-directional switch, a second bi-directional switch, and a third bi-directional switch,

wherein the input of the first bi-directional switch is in communication with the junction and the high voltage dc/dc converter,

wherein the output of the first bi-directional switch is in communication with the positive terminal of the load-leveling battery module, with the input of the second bi-directional switch, and with the input of the third bi-directional switch,

wherein the input of the second bi-directional switch and the input of the third bi-directional switch are in communication with the junction,

wherein the output of the second bi-directional switch is in communication with the front inverter, and

wherein the output of the third bi-directional switch is in communication with the rear inverter.

23. The powertrain system of claim 22, wherein the first bi-directional switch is rated at approximately **35** kW, the second bi-directional switch is rated at approximately 47 kW, and the third bi-directional switch is rated at approximately 23 kW.

24. The powertrain system of claim 22, wherein the first bi-directional switch provides three states of connectivity between the fuel cell and the load-leveling battery module, wherein the three states are connected through the high-voltage dc/dc converter, connected directly, and not connected.

25. The powertrain system of claim 23, wherein the second bi-directional switch provides the front inverter with power from one of the fuel cell, the load-leveling battery module, and a combination of the fuel cell and the load-leveling battery module, and

wherein the third bi-directional switch provides the rear inverter with power from one of the fuel cell, the load-leveling battery module, and a combination of the fuel cell and the load-leveling battery module.

26. A suspension system comprising:

four pneumatic/electromagnetic linear-ram suspension struts;

a pneumatically variable transverse link at each axle; and

a digital control system.

27. A power supply system for a hybrid-electric vehicle comprising:

a ring main that powers non-traction electrical loads of the vehicle;

a dual-fused junction box within the ring main;

a branch wire in communication with the dual-fused junction box; and

a vehicle component in communication with the branch wire.

28. The power system of claim 27, wherein the ring main is powered by a battery and a dc/dc converter that draws power from a powertrain of the vehicle.

29. A control system for a hybrid-electric vehicle comprising:

a body controller that controls body components of the vehicle via a low-speed controller area network;

a dynamics controller that controls propulsion components of the vehicle via a high-speed controller area network and controls steering and braking components via a fault tolerant TTP/C network; and

a data backbone that connects the body controller to the vehicle dynamics controller.

30. The control system of claim 29, further comprising a telematics controller that receives requests for off-board data from the body controller and the vehicle dynamics controller, wherein the telematics controller is connected to the data backbone.

* * * * *