A Battery State-of-Charge Indicator for Electric Wheelchairs

James H. Aylor, *Senior Member, IEEE*, Alfred Thieme, and Barry W. Johnson, *Senior Member, IEEE*

***Abstract*—Deep-discharge type lead-acid batteries are used in most electric wheelchairs. An accurate battery state-of-charge indicator is essential to prevent stranding and to provide economical operation of the wheelchair. A monitoring technique combining the open circuit voltage and the coulometric measurements had been implemented by the authors on a microcomputer-based circuit. The technique employs the coulometric measurement under loading conditions and open circuit voltage under no-load conditions. A 30-min rest period was used in measuring the open circuit voltage. An adaptive monitoring technique that enables the monitor to adjust to different battery sizes as well as the aging process was examined. Several improvements are made in this paper. A new technique has been developed to enhance the accuracy and to reduce the required rest period of the open circuit voltage measurement. The technique approximates the open circuit voltage recovery curve with two asymptotes on a semilog scale. The open circuit voltage is then extrapolated from the slope of the first asymptote before it fully stabilizes. The accuracy of the monitor has been verified in field tests, and comparison with a commercial battery monitor showed that the monitor in development is superior in several aspects.**

I. Introduction

A battery monitor for electric wheelchairs has been developed and tested [1], [2]. The purpose of the monitor is to inform the wheelchair user of the accurate state-of-charge of the wheelchair batteries in order to avoid stranding and provide maximum utility from the batteries. Most wheelchairs are powered by 24 V batteries (usually two 12-v units connected in series), and the state-of-charge of the batteries is essential information in electric wheelchair operations just as it is important to know the amount of fuel remaining for an automobile. An accurate battery monitor can serve several purposes. First, it can warn a wheelchair user to avoid the complete discharge of the batteries. This capability can prevent a user from being stranded and avoid damaging the cells in the long run. Second, it enables a user to utilize the batteries to a maximum degree without a total loss of charge. A survey by Curtis Instruments indicated that almost 50% of users experienced a stranding and consequently an extremely conservative discharging policy was used [3]. However, unnecessary charge cycles due to this conservatism resulted in frequent overcharging, which also has damaging effect to the cells.

The monitoring technique described is a combination of the open circuit voltage measurement and coulometric measurement (amp-hour counting). A technique has been developed to predict the open circuit voltage before it is fully stabilized. An adaptive feature enables the monitor to adjust to different size of batteries as well as the effect of aging. A circuit diagram of the prototype is shown in Fig. 1.

II. Definition of Capacity

It was pointed out that the function of a battery monitor is analogous to that of a fuel gauge in an automobile. However, there are several factors that make a battery monitor differ from a simple fuel gauge. For an automobile, performance does not depend on the amount of fuel remaining, except for the negligible effect of the weight differential, and the average rate of fuel consumption has no effect on the total amount of available fuel. Also, there is a clear-cut definition of total depletion of fuel, where the automobile will stop running altogether.

On the contrary, the operating voltage level of a battery decreases as the level of charge decreases, and consequently the motors tend to deliver less power. The rate of discharge—comparable to rate of fuel consumption—has a significant effect on the available capacity of a battery for reasons explained in Section III. Most important of all, there is no clear definition of the point at which a battery is completely depleted of charge. Because of the reasons pointed out above, it becomes necessary to define the term "capacity" of a battery. There are several ways to achieve this definition including 1) theoretical capacity, 2) usable capacity, and 3) state-of-charge.

The theoretical capacity is the maximum output obtainable from a battery under any circumstance. This value can be computed from the amount of active material within a cell, assuming the complete consumption of all the active material present [4]. This theoretical capacity is not practical for several reasons. First, the slow diffusion process of the electrolyte limits the amount of acid to reach the plates. This situation is more pronounced at high discharge rate, where the acid is consumed at a higher rate. Second, the internal resistance of a cell increases as the level of charge decreases, and finally, discharging a battery down to zero voltage has damaging effect on the cells [5].

Manuscript received September 28, 1991; revised April 16, 1992. This work was supported by the University of Virginia Rehabilitation Engineering Center and the National Institute for Disability Rehabilitation Research under grant H133E80003.

The authors are with the Center for Semicustom Integrated Systems, University of Virginia, Charlottesville, VA 22903-2442.

IEEE Log Number 9202499.

0278-0046/92$03.00 © 1992 IEEE

Authorized licensed use limited to: COLORADO STATE UNIVERSITY. Downloaded on September 19,2024 at 23:10:30 UTC from IEEE Xplore. Restrictions apply.

IPR2025-00032
Tesla EX1032 Page 1

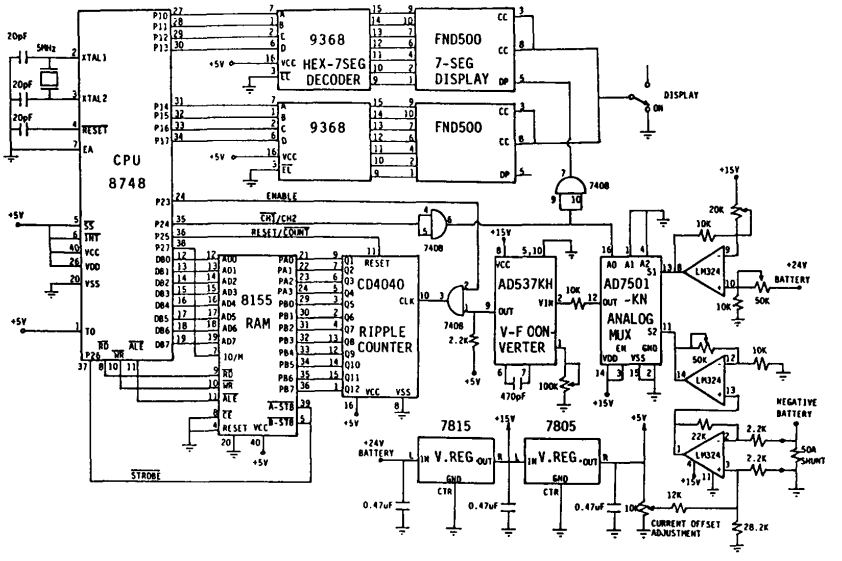

Fig. 1. Monitor circuit diagram.

The usable capacity defines the number of amp-hours available at a certain discharge rate. In order to obtain the usable capacity, it is necessary to select a cutoff voltage [4]. The cutoff voltage, or final voltage, is the lowest operating voltage of a cell at which the cell is considered depleted. The loaded voltage decreases steadily as a cell is discharged as a result of increasing internal resistance of a cell and lower concentration of acid at the plates. Fig. 2 shows the cell voltage versus time. It can be seen that the cell voltage decreases almost linearly for most of the time, until the cell is near "depletion" where the voltage decreases more rapidly. The cutoff voltage is usually defined at the "knee" of the curve. The cell may be discharged beyond the point, but only a small percentage of theoretical capacity can be obtained after the knee of the curve is reached. The cutoff voltage is lower for higher discharge rate. The usable capacity is lower for a higher discharge rate because the usable capacity is limited primarily by the diffusion rate of the electrolyte. It should be noted that the usable capacity does not take recuperation effect into account, since it is derived under continuous, constant current discharge conditions. With intermittent rest periods between discharges, the electrolyte has more time to diffuse into the pores. Because the main limiting factor of usable capacity is the limited diffusion rate of electrolytes a cell will be able to deliver more before the cut-off voltage is reached with rest periods. Therefore, even after a battery has supplied its rated amount of usable capacity, it is by no means completely discharged. However, the usable capacity is a practical alternative for the theoretical capacity, and most commercially available battery monitors provide readings of usable capacity.

State of charge differs from the usable capacity in the sense that it indicates the "state" a cell is in, rather than defining the amount of amp-hours available from a cell. That is, it indicates the concentration of acid in the electrolyte. Note that increasing the size of the battery or lowering the rate of discharge will result in more usable capacity even at the same state of charge.

III. Monitoring Techniques

There are several practical techniques available to monitor the batteries: 1) specific gravity, 2) open circuit voltage, 3) loaded voltage, and 4) coulometric measurement. Of these techniques, 1) and 2) are used to indicate the state of charge, and 3) is used to indicate the usable capacity. Technique 4) measures the amount of amp-hours taken out of (or put into) a battery, which can be thought of as an indirect indication of usable capacity.

The specific gravity indicates the density (in $g/cm^3 \times 1000$) of the electrolyte in lead-acid type batteries. The specific gravity is a direct indication of the state of charge, because it shows the concentration of acid in the electrolyte. (For example, SG = 1200 indicates an acid density of 1.200 g/cm^3.) It is the most commonly used technique of battery monitoring with the measurement being performed with a hydrometer. The most commonly used type of hydrometer consists of a syringe and a float. The float can be thought of as a uniform rod made of material whose density is slightly higher than that of water, with markings to indicate the length of the portion submerged in the electrolyte. Measurement of the specific gravity is made by drawing the electrolyte into the syringe and observing the marking on the float at the surface level of the electrolyte. The technique yields a reasonably accu-

Authorized licensed use limited to: COLORADO STATE UNIVERSITY. Downloaded on September 19,2024 at 23:10:30 UTC from IEEE Xplore. Restrictions apply.

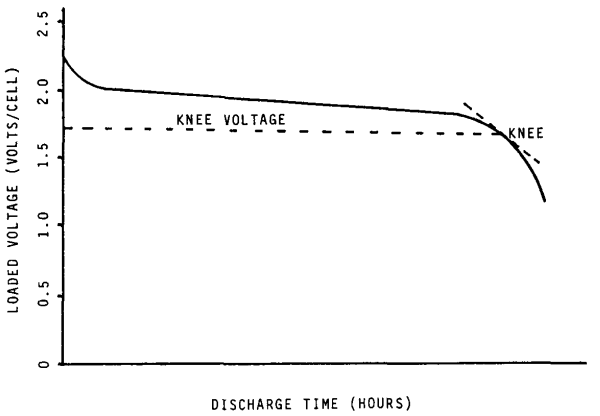

Fig. 2. Loaded voltage at constant discharge rate.

rate indication of the specific gravity; however, it is impractical for continuous use since the wheelchair would have to be stopped in order to perform the measurement. The specific gravity also requires a lengthy stabilization period after charge or discharge cycles, as a result of slow diffusion rate of the electrolyte. These drawbacks limit the use of this technique to routine checks, and it is clearly impractical for continuous use in an electrical wheelchair environment.

The open circuit voltage of a cell can be shown to be a function of the concentration of acid at the plates. It has been widely accepted that fully stabilized open circuit voltage is an accurate indicator of the state of charge with little dependency on the temperature or past history of a cell [6], [7]. Fig. 3 shows the relationship between open circuit voltage, remaining capacity, and specific gravity [4], [5]. As shown in the figure, the relationship is linear for usable range of specific gravity. For determining the values of specific gravity (and therefore the open circuit voltage) for full charge and complete depletion of charge, there is no standard that is universally accepted, partially due to the fact that batteries have different range of specific gravity depending on the purpose [4]. It has been found that when fully charged, the specific gravity of a typical wheelchair battery reaches 1270. For the low end, the generally recommended value is 1100 [8]. The range of specific gravity from depletion to full charge has been determined (by using the manufacturer's ratings at constant discharge rate) to be 1090 to 1270, with corresponding open circuit voltage shown in Fig. 3.

The main weakness of this technique is the lengthy stabilization period associated with the open circuit voltage after charge or discharge cycles, similar to that of the specific gravity measurement. Fig. 4 shows a typical recovery process for three state-of-charge conditions (80%, 60%, and 40%). Under frequent loading conditions, such as in an electric wheelchair environment, this method will not provide continuous indication of the state-of-charge.

Like the open circuit voltage, loaded voltage has a nearly linear relationship with the specific gravity, provided that the load current is constant. Most devices, including electric wheelchairs, have fluctuating load current, which also varies the loaded voltage of the battery. This situation makes it impractical to monitor the loaded voltage continuously, but several monitors based on the average voltage are available, such as Sears Battery Monitor, Range Indicator (by Motovator) and Curtis Fuel Gauge (by Curtis Instruments). Of these, the Curtis fuel gauge has been found to be the most sophisticated and accurate [9].

The Curtis Fuel Gauge predicts remaining capacity of a battery by measuring the total duration of loaded voltage under a certain value. For example, if total duration (continuous or succession of pulses) of voltage under 24.25 V for 12 cells reaches 3 min, remaining capacity is lowered from 100 to 90%, etc. [3]. This technique compensates for the fact that discharge current is not constant. Consequently, the voltage is not constant; however, it still requires that overall (average) load current be consistent.

Coulometric measurement is the process of summing the amount of capacity taken out of (or put into) a battery in terms of amp hours [7]. (Actual capacity should be in watt-hours, but amp-hours are universally used because of relatively constant battery voltage.) It is a useful technique under loading conditions, but it requires the knowledge of the battery capacity in terms of amp-hours. The technique does provide relatively accurate short-term (continuous) indication of the state-of-charge; however, accumulation of error over a longer period makes it impractical to be used by itself.

IV. Adaptive Battery Monitoring Concept

Each of the techniques discussed above has its own drawbacks. However, by combining the open circuit voltage and coulometric measurement techniques, it is possi-

Authorized licensed use limited to: COLORADO STATE UNIVERSITY. Downloaded on September 19,2024 at 23:10:30 UTC from IEEE Xplore. Restrictions apply.

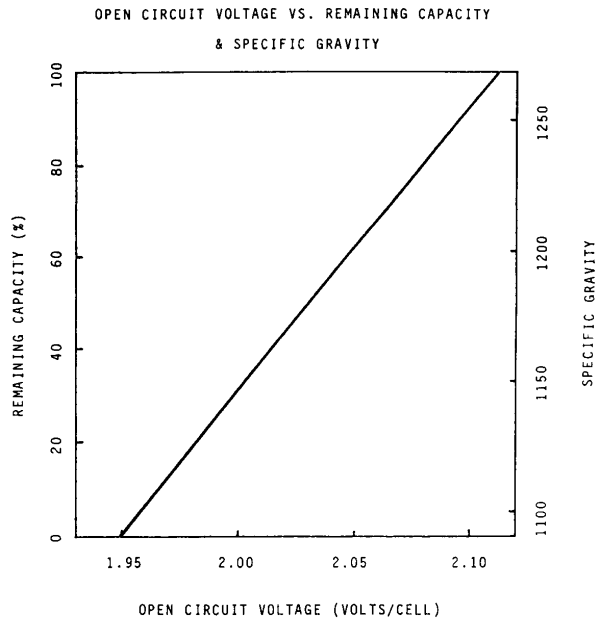

Fig. 3. OCV as indicator of remaining capacity.

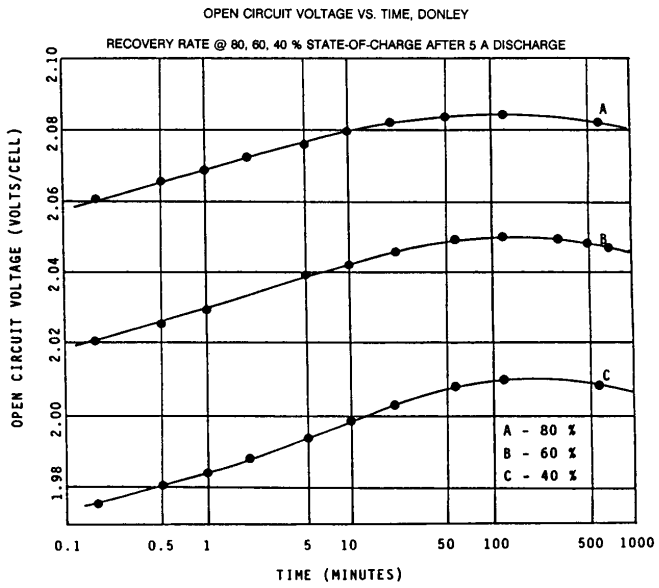

Fig. 4. OCV recovery rate.

ble to cover the weakness of both techniques and provide an accurate monitoring technique. Coulometric measurement is used in short-term operations, where the accumulation of error will be negligible. The error that is accumulated from coulometric measurement technique can be corrected when an open circuit voltage reading is taken. The open circuit voltage reading is taken every time the battery is sufficiently rested. In addition, an adaptive

Authorized licensed use limited to: COLORADO STATE UNIVERSITY. Downloaded on September 19,2024 at 23:10:30 UTC from IEEE Xplore. Restrictions apply.

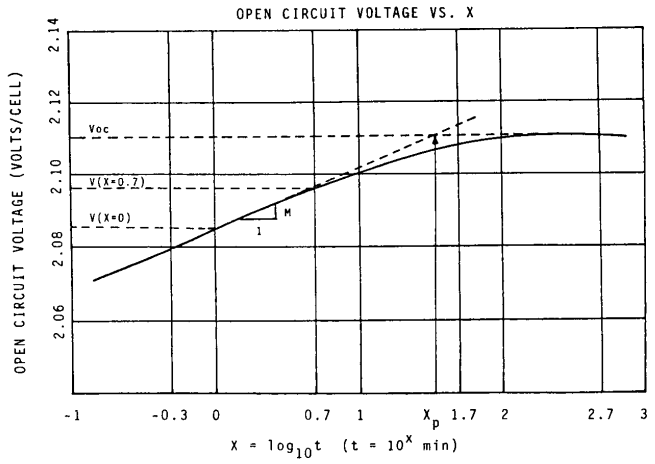

Fig. 5. Illustration of variable X.

feature is incorporated into the coulometric technique, which enables the monitor to adjust to different size batteries as well as the aging effect [10]. This method provides an accurate way of monitoring the state-of-charge of lead-acid batteries. It is versatile in the sense that it does not depend on the size of the batteries or the discharge rate. However, the range of the specific gravity must be specified for the given application. It should be noted that this method has been limited to lead-acid type batteries. This restriction is used because of the unique OCV-SG relation that exists in lead-acid types. The limitation, however, is justified by the fact that the majority of the wheelchair batteries are lead-acid types.

V. Battery Model

In developing a battery model, several criteria were considered important. First, the model had to be practical. The stabilization period of the open circuit voltage requires at least several hours. However, it is unreasonable to expect a wheelchair user to wait several hours just to obtain an updated value of the remaining capacity. Therefore, it was considered necessary to "predict" the OCV before it fully stabilizes after a reasonably short rest period. Second, the model had to be able to adapt to different size batteries. This capability also includes the aging effect, since the effects of aging are the same as reduced battery size. Third, the model had to be implementable in a microcomputer environment. This constraint was required because the prototype was built around a microprocessor. Also, in case of a commercial application, the device is expected to be an integral part of a wheelchair controller system, where the implementation will be done mostly in software.

VI. Prediction of the Open Circuit Voltage

Originally, a rest period of 30 min was used [10]. This method basically assumed an identical set of voltage recovery curves regardless of the state of charge or the discharge rate prior to the recovery process. Mathematically, the technique was represented as

$$V_{oc} = V_{tr} + K_v \tag{1}$$

where

V_{oc} = fully stabilized open circuit voltage

V_{tr} = voltage at time = t_r

t_r = 30 min (arbitrary rest period)

$K_v = V_{oc} - V_{tr}$ (constant for a specific battery).

Equation (1) worked well for a specific battery, but the constant K_v varied significantly with different batteries. In order to compensate for this anomaly, an alternate method of predicting the open circuit voltage has been developed and was found to be remarkably accurate. The following are the descriptions of the method.

A recovery curve can be approximated by two asymptotes if plotted on semilog scale, as shown in Fig. 5. A new variable X was introduced in place of t in order to obtain a linear equation, where X is the exponent of time. The relationship between X and t is written as

$$t = 10^X \text{ min}. \tag{2}$$

From Fig. 5, X_p is the value of X at the intersection of two asymptotes. Therefore,

$$V_{oc} = M^* X_p + V_o \tag{3}$$

where

M = slope of first asymptote

X_p = value of X at the intersection

$V_o = V(t = 1 \text{ min}, X = 0)$.

Table I shows the data collected from several different batteries at various levels of discharge current and state

Authorized licensed use limited to: COLORADO STATE UNIVERSITY. Downloaded on September 19,2024 at 23:10:30 UTC from IEEE Xplore. Restrictions apply.

of charge. Voltage readings were taken at $X = 0$ ($t = 1$ min) and $X = 0.7$ ($t = 5$ min), from which the slope was calculated as follows.

$$M = \frac{V_{0.7} - V_o}{0.7} \tag{4}$$

As shown in Table I, X_p was quite consistent with values ranging from $X_p = 1.4$ ($t_p = 25$ min) to $X_p = 2.1$ ($t_p = 126$ min). The errors caused by these seemingly large deviations were 1.2 and 4.7%, respectively, as shown in Table II. It is obvious that X_p is less prone to deviation compared to t_p, since X is the exponent of t. The average value of X_p is used in the equation, with X_p (average) = 1.64. Therefore, from (3),

$$V_{oc} = 1.64*M + V_o. \tag{5}$$

Table II shows the actual and calculated values of the open circuit voltage, with the errors calculated as

$$\text{Error} = \frac{V_{oc}\ (\text{actual}) - V_{oc}\ (\text{calculated})}{0.17}.$$

This equation represents the amount of error that will show up on display, since the capacity range of 0 to 100% corresponds to cell voltage of 1.94 to 2.11 V, or $\Delta V = 0.17$ V. The error from (5) is remarkably small, with an average of 1.6% .The error is negligible when the measurement errors are taken into consideration.

TABLE I
DATA FOR M, X_p

Maker/ Type	V_o (V/cell)	$V_{0.7}$ (V/cell)	M	X_p
Johnson Controls	2.087	2.105	0.0257	1.8
Gell Cell	2.058	2.077	0.0271	2.1
Donley	2.054	2.068	0.0200	1.6
	2.008	2.022	0.0200	1.8
	2.095	2.108	0.0186	1.5
	2.084	2.096	0.0171	1.7
Sears Marine	2.072	2.084	0.0171	1.5
Deep Discharge	2.069	2.080	0.0157	1.5
	2.043	2.054	0.0157	1.7
	2.042	2.052	0.0142	1.7
Donley	2.069	2.076	0.0100	1.4
Deep Discharge	2.040	2.048	0.0114	1.5
	2.029	2.038	0.0129	1.5

X_p (ave.) = 1.64 0.2 (S.D.).

TABLE II
V_{oc} (ACTUAL) VS. V_{oc} (CALCULATED)

Maker/ Type	V_{oc} (actual) (V/cell)	V_{oc} (calculated) (V/cell)	Error (% cap.)
Johnson controls	2.132	2.129	1.8
Gell Cell	2.111	2.103	4.7
Donley	2.088	2.087	0.6
	2.045	2.041	2.4
	2.123	2.126	1.8
	2.111	2.112	0.6
Sears Marine	2.098	2.100	1.2
Deep Discharge	2.094	2.095	0.6
	2.073	2.069	2.4
	2.068	2.065	1.8
Donley	2.083	2.085	1.2
Deep Discharge	2.058	2.059	0.6
	2.049	2.059	0.6

Error (ave.) = 1.56 1.17% (S.D.).

VII. Model for the Coulometric Measurement

The prediction of OCV described in Section II is used to update the indicated remaining capacity during rest periods. During charge or discharge cycles, coulometric measurement is used to continuously update the remaining capacity. In deriving a coulometric model of a battery, one assumption was made. It was mentioned earlier that the capacity of a battery varies with the average load current. However, a particular wheelchair has a fairly consistent load, and it was assumed that the relationship between the capacity removed per sampling period and load current was linear. This assumption will introduce errors under the certain conditions: 1) different average load and 2) different battery size. Condition 1) can be caused by the drive system itself (some wheelchairs have bigger or smaller motors), prolonged uphill/downhill operation, and the rider (heavier rider results in higher load). Condition 2) can occur if the batteries get old and lose their efficiency and also if they are replaced by batteries of different sizes.

In order to compensate for these conditions, a model had been developed to "learn" the size or the condition of the batteries [10]. It compares the predictions (of remaining capacity) by OCV and coulometric measurements. Since the OCV is an accurate indicator of the remaining capacity, the coulometric model can be adjusted to fit the result of OCV measurement. Implementation of this technique is illustrated in Fig. 6. The solid line is the assumed [I versus $\Delta C/T$] relationship, and the dotted line is the actual [I versus $\Delta C/T$]. The error correction factor (ECF) is defined to be the amount of error between the actual capacity removed from the battery and the assumed capacity removed per sampling period per unit current. Therefore,

$$\text{ECF} = \frac{E/(T_d/T)}{I_{av}} \tag{7}$$

Since $E = C_{ocv} - C_{cm}$ and $I_{av}/T = C_t/T_d$,

$$\text{ECF} = \frac{(C_{ocv} - C_{cm})/(T_d/T)}{C_t/(T_d/T)} \tag{8}$$

$$\text{ECF} = (C_{ocv} - C_{cm})/C_t \tag{9}$$

where

T = sampling period
T_d = total discharge period
C_{ocv} = remaining capacity predicted by OCV measurement
C_{cm} = remaining capacity predicted by coulometric measurement
I_{av} = average current
C_t = total capacity removed during T_d

Authorized licensed use limited to: COLORADO STATE UNIVERSITY. Downloaded on September 19,2024 at 23:10:30 UTC from IEEE Xplore. Restrictions apply.

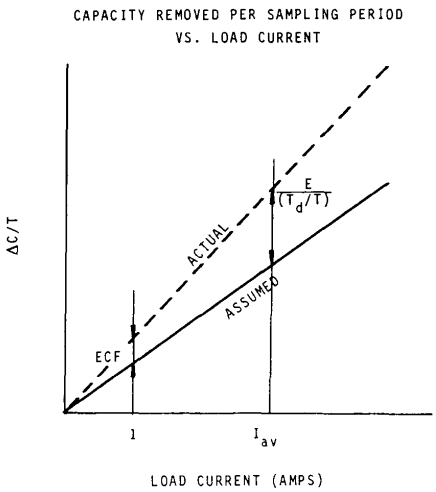

Fig. 6. Illustration of error correction technique.

E = total error during T_d

ECF = error correction factor.

The ECF is corrected each time an open circuit voltage measurement is taken to update the remaining capacity. The amount of capacity removed per sampling period is compensated by ECF*I_s, according to (9), where I_s is the average current during the sampling period.

VIII. Implementation of the Model

The monitor is built around a microprocessor, an INTEL 8748 EPROM. The circuit can be divided into three stages: 1) analog data processing, 2) analog-to-digital conversion, and 3) display. A diagram of the system is shown in Fig. 7.

The analog data processing circuit consists of a quad op-amp and analog multiplexer. The op-amps are used to scale the input voltages from the battery terminals and the current shunt. In Channel 1, the battery terminal voltage of 22–27 V is shifted to 0–5 V. The load current is monitored at Channel 2. A 50-A shunt is used for current measurement and two op-amps convert the voltage from the shunt into the range 0 to 5 volts.

The AD 7501KN analog multiplexer works like a switch that connects either Channel 1 or Channel 2 to V-F converter. The switching command is issued by the software. AD 537-KH voltage-to-frequency converter converts the input voltage from the analog multiplexer into square wave signal, with the relationship $f = kV_{\text{in}}$ (k = constant). The output frequency is adjusted to be 18.6 kHz at the maximum input of 5 V. This condition yields a full count of FFFH in 0.22 s of sampling period for a CD4040 12-b ripple counter. An 8155 RAM serves as a temporary storage for the data from the ripple counter until it is strobed into the processor. The display unit consists of two 9368 Hex-to-7 segment Decoder/driver and two FND500 7-segment LED displays. This setup provides a two-digit display of state of charge in decimals. The data is output at Port 1 of the processor (8 b) with each nibble representing a digit.

With the given hardware, the software has access to the battery terminal voltage and the load current. It also has a control over the two-digit display unit and the rest of the circuit. The function of the software is to receive the battery voltage/current data, calculate correct state of charge and output the result to the display. The program is written in INTEL 48-series assembly language. The program memory consists of 4 pages (0 to 3) with 256 bytes of memory in each page. Pages 0, 1, and second half of page 2 are occupied by the program. Page 3 and first half of page 2 are occupied by tables that represent OCV-SOC and load current-% capacity removed relations.

The model to predict the open circuit voltage (5) is implemented in the software as follows. Because the programming is done in the assembly language, it is easier to do multiplications in powers of 2. When two voltage readings are taken in order to calculate the slope M, they do not necessarily have to be at $t = 1$ min and $t = 5$ min, as long as they are within the linear region of the recovery curve (refer to Fig. 3). The linear region occurs approximately between $t = 0.5$ min ($X = -0.3$) and $t = 10$ min ($X = 1$); therefore any two samples taken within these limits will suffice. If the first voltage sample is taken at $t = 1$ min, (4) can be written as

$$M = \frac{V_s - V_o}{X_s} \tag{10}$$

where

$$V_o = V(X = 0, t = 1 \text{ min})$$
$$0 < X_s < 1 \; (1 < t_s < 10 \text{ min})$$
$$V_s = V(X = X_s, t = t_s)$$

and

$$M^*X_p = \frac{V_x - V_o}{X_s}*1.64 = (V_s - V_o)*\frac{1.64}{X_s}. \tag{11}$$

It is desirable to have the coefficient 1.64/s be a power of 2, therefore

$$\frac{1.64}{X_s} = 2^n \qquad n = \text{integer}$$
$$= 1, 2, 4, \cdots$$

and

$$X_s = 1.64 \; (t_s = 43.7 \text{ min}), \; n = 0$$
$$X_s = 0.82 \; (t_s = 6.6 \text{ min}), \; n = 1$$
$$X_s = 0.41 \; (t_s = 2.57 \text{ min}), \; n = 2, \text{ and so on.}$$

Among the values of t_s, $t_s = 6.6$ min satisfies the requirements best. Therefore,

$$M^*X_p = 2^*(V_s - V_0) \tag{12}$$

Authorized licensed use limited to: COLORADO STATE UNIVERSITY. Downloaded on September 19,2024 at 23:10:30 UTC from IEEE Xplore. Restrictions apply.

and (5) becomes

$$V_{oc} = 2^*(V_x - V_o) + V_o = 2^*V_x - V_o \qquad (13)$$

with $V_s = V$ (t = 6.6 min) and $V_o = V$ (t = 1 min).

The relation between OCV and SOC (refer to Fig. 2) is implemented with a look-up table (Table OCV). The two lower bytes of address are encoded in order to represent the battery terminal voltage in the range of 22–27 V in a linear fashion. The contents represent the decimal equivalent of the state of charge in hex ($63H = 99$). The first two contents are instructions. They are A3H (MOVP A,@A), which replaces the accumulator with the content of the address pointed by the accumulator, and 83H (Return).

Another look-up table (Table CURRENT) is used to implement the relation between the load current and the percent capacity removed per sampling period. As mentioned earlier, the load current of −50 to 50 A is converted to 00H–FFH by the A-D conversion circuit. Rather than tabularizing the entire range of −50 to 50 A, only −50 to 0 A was represented in the table. The charge current (0–50 A, or $80H$–FFH) would be handled by using the same table. This process is accomplished by simply complementing the data. When complemented, 80H–FFH is converted to 80H–00H. (Another reason for reducing the table by one-half was the lack of program memory space. The form of Table CURRENT is similar to Table OCV, with the address representing the load current and the contents (of the addresses) representing the % capacity to be removed per sampling period.

The program can be divided into four major parts: 1) MAINPROGRAM, 2) subroutine DISCHARGE, 3) subroutine CHARGE, and 4) subroutine UPDATE.

The MAINPROGRAM initializes the circuit at power on, keeps track of timers, and calls appropriate subroutines. At power on, the SOC is initialized by reading the OCV and referring to the Table OCV. The load current is constantly monitored. In the case of nonzero load, either DISCHARGE or CHARGE subroutine is called to continually update the displayed SOC. In case of no load, voltage samples are taken after no-load periods of 1 and 6.5 min, respectively, in order to calculate the open circuit voltage (refer to (12)). Two provisions are made in predicting the open circuit voltage. First, the prediction is made only for a state-of-charge less than 80%. This particular condition is used to minimize the effect of previous charge cycle that is most pronounced at a state of charge of greater than 90%. Second, the prediction is made only after a discharge cycle. The recovery process of the open circuit voltage is entirely different after a charge cycle; therefore, the prediction technique could be used only after a discharge cycle. After the open circuit voltage is calculated, the subroutine in UPDATE is called.

The subroutines DISCHARGE and CHARGE are nearly identical. The only difference is the subtraction of capacity in DISCHARGE in contrast to the addition of capacity in CHARGE. The state of charge is adjusted after referring to the table CURRENT by adding (or subtracting) the value from the table and the error correction factor.

The subroutine UPDATE calculates the error correction factor and displays the updated value of the state-of-charge. The error correction factor is calculated according to (9). (The data from the table OCV is converted from hexadecimal to decimal for convenience of the user.) The updated value of the state of charge is output to Port 1, where the display units are connected.

IX. Field Test Results

Even though the monitor works well under constant current discharge conditions, performance analysis under a real life environment was considered necessary for several reasons. First, the batteries are not discharged at a constant rate in an actual electric wheelchair. Discharge cycles will consist of varying loads depending on the slope of the road, the weight of the passenger, and most important of all, the wheelchair itself. Second, it is not realistic to assume a continuous current discharge, since the routes will consist of intermediate stopping periods due to traffic, etc., and it is also improbable that a wheelchair user will use the wheelchair for an extended period of time without ever stopping.

Two battery monitors were tested in order to make a comparison. The monitors were the Curtis Fuel Gauge by Curtis instruments, which is commercially available, and the monitor in development. The tests were limited to discharge cycles. The batteries were fully charged each time, using an Everest-Jennings 24 V battery charger with a built-in timer. The "Rolls" electric wheelchair by Invacare was used because of its availability. It is equipped with two $\frac{1}{5}$ hp motors driving each of the rear wheels through direct gearing with 15:1 reduction ratio. The controller was made by General Teleoperators, Inc., with two speed settings. The high-speed setting was used through the test.

The Donley 22NFD deep-discharge batteries, made specifically for electric wheelchairs, were used throughout the tests. They were rated at 40 amp-hours each, with removable caps to enable the use of hydrometers. At the time of testing, they were fairly new, with approximately 10 charge/discharge cycles in their log. Hydrometers were used to measure the specific gravity, which was used as the true indication of the state of charge. The Balkamp "Battery Tester" had a built-in temperature compensation with a pivoting float, and the second hydrometer, whose manufacturer could not be determined, had a built-in thermometer for temperature calibration. The float was marked at increments of 0.005, with range of 1.080–1.300. An average of three cells were taken each time, even though they were consistent in most cases. The hydrometer with a built-in thermometer was used throughout after initial comparison of the hydrometers. The Curtis Fuel Gauge was chosen because it was one of the most sophisticated and accurate wheelchair battery monitors that are

Authorized licensed use limited to: COLORADO STATE UNIVERSITY. Downloaded on September 19,2024 at 23:10:30 UTC from IEEE Xplore. Restrictions apply.

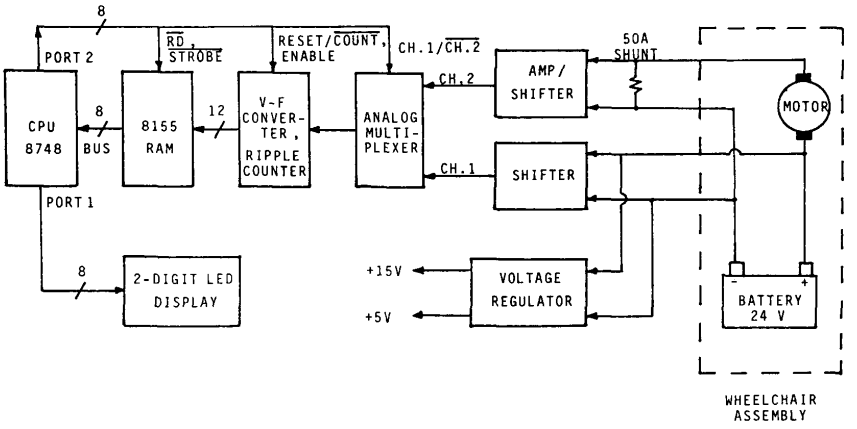

Fig. 7. Block diagram of the hardware.

commercially available [3], [9]. Both monitors were run simultaneously at all times.

Two different routes were chosen in evaluating the monitors. The slope of the routes were estimated, and distances were measured using an automobile odometer, taking an average of several readings. In reading the 10-segment LED display of Curtis Fuel Gauge, each segment was assumed to be representing an interval of 10% capacity, i.e., top segment represents 90–100%, and was plotted as 95% instead of 90 or 100%. Descriptions of the routes are as follows.

A parking lot with one lap distance of 0.24 km (0.15 mi) was chosen for the level-surface test. Inclines were small, and it was considered to be a good simulation of an average outdoor route. The wheelchair was operated at full speed and stops of less than 30 s were made after each lap in order to record the display readings. The batteries were rested at roughly 20% decrements in order to measure the open circuit voltage and the specific gravity. The duration of rest period varied from one hour to overnight, which was essential in obtaining accurate specific gravity and open circuit voltage readings.

The second route mainly consisted of hilly roads. The route was 2 km one way with slopes as steep as 20° on some stretches. The purpose of this route was to analyze the performance of the monitor under abnormally high (and low) loads. Again, the batteries were rested at several values of remaining capacity in order to obtain the open circuit voltage and specific gravity readings, with the duration of each rest period lasting from one hour to overnight. Table III shows the data obtained from the field tests. In the first column, display of the monitor in development is the updated value, and the display before the update is shown in parentheses. The displays were compared to the average of open circuit voltage and specific gravity readings, shown in the far right column.

The performances of both monitors on the level surfaced route are plotted in Fig. 8. Both monitors turned in good results with insignificant errors considering the low resolution in measuring the specific gravity. There was a slight tendency for both monitors to overpredict when the batteries were near full charge and to underpredict at low level of remaining capacity. The average speed of the wheelchair was 6.2 kph. The batteries delivered most power at remaining capacities of 80–90%, and they had sufficient power with only 10% of remaining capacity.

TABLE III
FIELD TEST RESULTS

Test	Displays Monitor	Displays Curtis	OCV (V)	SG	Average[a]
Level surface route	99	95	25.26 (96%)	1.255(92%)	94
	80 (79)	85	24.80 (73%)	1.220 (72%)	73
	62 (65)	65	24.58 (62%)	1.198 (58%)	60
	45 (48)	55	24.24 (45%)	1.170 (45%)	45
	32 (29)	35	—	1.145 (30%)	30
	7 (10)	5	23.64 (15%)	1.100 (7%)	11
Sloped route	94	95	25.18 (92%)	1.250 (89%)	91
	62 (80)	85	24.86 (76%)	1.220 (72%)	74
	68 (64)	75	24.68 (67%)	1.205 (63%)	65
	52 (49)	45	24.36 (51%)	1.180 (50%)	51
	21 (20)	5	23.82 (24%)	1.120 (17%)	21

[a] Average of OCV and SG readings, to be used as actual remaining capacity.
Values in parentheses are the display before update.

Fig. 9 shows the results from the sloped route test. The monitor under development turned in good results, with only a slight tendency to overpredict near the top. The Curtis Fuel Gauge functioned well for remaining capacity of over 50%, but there was a severe underprediction capacity at actual remaining capacity of 30% (estimated). At the end of the test, with roughly 20% remaining capacity, the wheelchair was slower but was able to pull up inclines of up to 20° (estimated).

Both monitors performed well in the level surface test, with insignificant errors. This environment best represents everyday use of electric wheelchairs, and it appears that both monitors are more than adequate for this purpose.

Authorized licensed use limited to: COLORADO STATE UNIVERSITY. Downloaded on September 19,2024 at 23:10:30 UTC from IEEE Xplore. Restrictions apply.

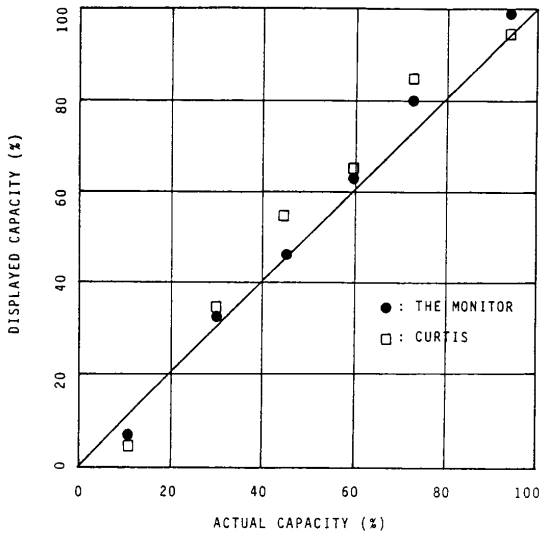

Fig. 8. Field test results from level surface route.

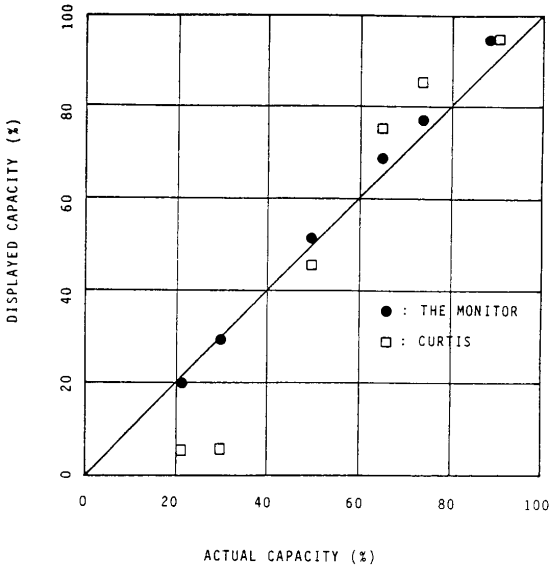

Fig. 9. Field test results from sloped route.

However, some shortcomings were revealed in sloped route test, where the road conditions were not consistent. The Curtis Fuel Gauge tended to underpredict by as much as 30%, which is a result of higher load current (and lower operating voltage). On the other hand, even though the monitor in development was accurate in the sloped route test, there is a possibility of the batteries not being able to deliver the amount of current necessary to negotiate steep hills, with the display showing nonzero remaining capacity.

X. Monitor Performances in Charge Cycle

It was noted that the batteries will not necessarily be fully charged every time they are removed from a charger. It is possible that a user may wish to use the chair before the batteries are fully charged, in which case the performance in charge cycles becomes important. For this reason, the performance of the monitors (the monitor in development and Curtis Fuel Gauge) was analyzed for charge cycle. The main difference between the two monitors in charge cycle is as follows. The Curtis Fuel Gauge simply resets to 100% at approximately 80–90% level of charge, regardless of the previous indication. The monitor in development increments the display according to the charge current, with assumed charge efficiency of 100%.

The batteries (Donley 22FD's) were discharged to 20% remaining capacity, then charged up to 30, 60, and 80%, each time cutting off the charge current in order to observe the voltage recovery rate and monitor performance. The performance of the monitors is shown in Fig. 10. The Curtis Fuel Gauge does not handle the charge cycle; it resets to full if the voltage remains above 28.4 V for 6 min [3]. As a result, it stays at the level prior to charge until the level of charge reaches 80 to 90%. Hence, the user may not know the exact capacity of the battery if it is not fully charged. The monitor in development uses 100% charge efficiency, with same current-to-capacity removed relationship for charge and discharge cycle. It tended to overpredict, presumably caused by actual charge efficiency of less than 100%, reaching 99% indication at approximately 90% state of charge. It does not increment beyond 99%.

The Curtis Fuel Gauge is built with an emphasis on discharge cycle; it merely resets to full (without incrementing step by step) after a certain level of charge is reached. This can cause a problem in a situation described as follows:

1) Batteries are totally discharged (zero indication).
2) Charged up to ~ 80% (still zero indication, since battery voltage is still under 28.4 V).
3) Charger is taken off.

In this case, the wheelchair user will never know how much charge is remaining in the batteries until next charge cycle, provided that the batteries are fully charged.

The monitor in development tended to overpredict quite a bit, which is a result of several factors. First, it assumes 100% charging efficiency, which is not true, even though it is very close to 100% during most of the charge cycle [7]. Second, the monitor uses same current-to-capacity removed relationship for both charge and discharge cycles. However, the charge current was approximately 4 A, whereas the discharge current (on the wheelchair) was ~ 8.5 A. Since the total capacity (in terms of amp-hours) of a battery is different for different discharge rate (and presumably for different charge rate also), it leads to the

Authorized licensed use limited to: COLORADO STATE UNIVERSITY. Downloaded on September 19,2024 at 23:10:30 UTC from IEEE Xplore. Restrictions apply.

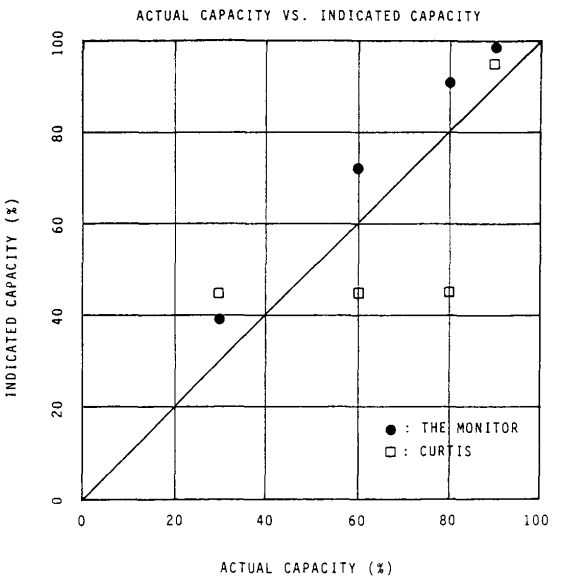

Fig. 10. Monitor performances in charge cycle.

conclusion that in order to obtain more accurate results for charge cycle, it is necessary to have an altogether different updating technique and error correction routine.

Conclusions

There are several areas where the design can be improved. If this design becomes commercial, it is expected to be an integral part of computerized wheelchair system. One of the problems was the power consumption of the monitor. Since it has to be continuously active, even a small power drain will be a factor. The prototype had total current of 450 mA, which was considered too large. This result has a couple of effects on the overall system and the performance of the monitor. First, the open circuit voltage does not reach its full value because of the power consumption of the monitor. This situation is important because the open circuit voltage measurement is already sensitive to measurement errors due to the small range of OCV. The problem was solved by employing the OCV prediction method described earlier. Second, such a power consumption would drain the batteries in less than a week for 40 A-H batteries. It may not seem significant for daily operations, but if the wheelchair is unused for days, it will become a factor in economical operations of a wheelchair.

The power consumption of the monitor can be reduced dramatically by modifying the hardware. First, the seven-segment LED displays and their drivers consume over 200 mA. This situation is caused by the fact that they were powered continuously with duty factor of infinity. (The duty factor is the ratio between ON/OFF periods; most LED displays operate with a duty factor of less than 1 even though it appears to be constantly on to human eyes.) In addition, using bar graph displays will further reduce the power consumption, since only one segment of a bar graph has to be powered at a time. Another alternative would be to use LCD's, since they consume virtually no power. Second, the circuit consisted of TTL components, which has higher power consumption compared to CMOS components. Replacing the TTL circuit with a CMOS would reduce power consumption of the monitor even further. Another area that can be improved is the charge cycle monitoring. The charge cycle was treated in the same manner as the discharge cycle, but the performance in charge cycle was only marginal compared to the performance in discharge cycle.

Even though the monitor was designed specifically for electric wheelchair batteries, it can be used with any lead-acid batteries with little or no modifications. The batteries have wide range of size and applications. The most common battery environment would be automotive applications, where the load consists of high-current short-duration discharges (driving starting motors) to small, continuous discharges. The batteries are also charged while the engine is running, making it almost impossible to monitor the state of charge by observing the loaded voltage. On the other hand, a battery-operated environment such as a forklift truck would consist of more cells of larger size and severely fluctuating load, with continuous charge cycles. The monitoring concept of combining the open circuit voltage and coulometric measurement appears to be ideal for these applications as the loaded voltage is impractical in the environments described above. Modifying the voltage table will be necessary for batteries with different range of specific gravity or different number of cells, and the current table should be modified to roughly represent the battery size.

It has been shown that the method of combining the OCV measurement with the coulometric technique is an accurate way of predicting the state of charge for lead-acid batteries. The method has been ignored mainly because of the lengthy recovery period of the OCV. However, the problem has been solved by the prediction technique, and combined with the adaptive feature (the error correction technique), the monitor yielded good results in field testings.

Acknowledgment

The authors would like to acknowledge S. Lim for contributing the OCV prediction technique and developing the initial prototype.

References

[1] J. H. Aylor and K. L. Short, "A microcomputer-based battery monitor," in *Proc. 1985 RESNA Conf.*, Memphis, TN, June 24–28, 1985.

[2] J. H. Aylor, and S. H. Lim, "Improvements and performance of an adaptive battery monitor," in *Proc. 10th Annu. Conf. Rehabilitation Technology*, San Jose, CA, June 19–23, 1987.

[3] H. Dreer (Manager, Curtis Instruments, Inc.), *Product Test Report, Curtis Wheelchair Battery Fuel Gauge*, Marketing Services Dept., Curtis Instruments, Inc. Jan. 1984.

[4] G. W. Vinal, *Storage Batteries*, 4th Ed. New York: Wiley, 1955.

Authorized licensed use limited to: COLORADO STATE UNIVERSITY. Downloaded on September 19,2024 at 23:10:30 UTC from IEEE Xplore. Restrictions apply.

[5] C. C. Christianson, "Battery charge condition monitoring techniques and applications," in *Proc. Third Int. Electric Vehicle Symp.*, Washington, DC, 1974, Paper No. 7469.
[6] P. B. Patil, "Fuel gauges for electrical vehicles," in *Proc. 17th IECEC*, 1982 IEEE, New York.
[7] N. M. Banes *et al.*, The Sealed Lead Battery handbook. *General Electric Co., Publication BBD-OEM-237.*
[8] K. Marsh, Ed., *Curtis Battery Book One*, Curtis Instruments, Inc., 1971, Mt. Kisco, NY.
[9] J. J. Kauzlarich, *Electric Wheelchair Fuel Gauge Tests*, Report No. UVA-REC-102-86, U.V.A. Rehabilitation Engineering Center, January 1986.
[10] K. Short, Jr., "An adaptive battery monitor," Masters Thesis in Electrical Engineering, University of Virginia, Charlottesville, Jan. 1986.

James H. Aylor (S'66–M'68–S'71–M'76–SM'82) received the B.S., M.S., and Ph.D. degrees in electrical engineering from the University of Virginia, Charlottesville, in 1968, 1971, and 1977, respectively.

He is currently a Professor in the Department of Electrical Engineering at the University of Virginia and Director of the Center for Semicustom Integrated Systems. During 1983, he was a Visiting Scientist with the Federal Systems Division of IBM. His research interests are in the areas of design automation of digital systems, VLSI systems, fault tolerance and testing, hardware description languages, and devices to aid the handicapped. He has published approximately 90 journal and conference papers covering the above technical areas. Specific significant research accomplishments for Professor Aylor include participation in the development and benchmarking of the VHSIC Hardware Description Language and the development of a new performance modeling technique to support the design of digital systems from concept to implementation.

Dr. Aylor is a member of IEEE Sigma Xi, Tau Beta Pi, AAAS, and the IEEE Computer Society within which he is currently President-elect and a member of the Board of Governors. He has also served as a member of the IEEE Micro Editorial Board, three Vice Presidential positions (Conferences and Tutorials, Publications, and Press Activities), and founder of the Technical Committee on Computing and the Handicapped. He can be contacted through his electronic mailbox on the Internet at jha@virginia.edu.

Alfred Thieme, III was born in Fairfax, VA, on July 1, 1967. He received the B.A. degree in economics from the University of Virginia, Charlottesville, in 1989 and is currently completing the M.S.E.E. degree at the University of Virginia.

His current research efforts are directed at addressing the problem of energy management in a powered wheelchair system.

Barry W. Johnson (S'90) received the B.S., M.E., and Ph.D. degrees in electrical engineering from the University of Virginia, Charlottesville, in 1979, 1980, and 1983, respectively.

He is currently an Associate Professor in the Department of Electrical Engineering at the University of Virginia. He is also a cofounder and member of the Center for Semicustom Integrated Systems, a Technology Development Center of the Virginia Center for Innovative Technology. Prior to joining the University, he was with the Harris Corp., Melbourne, FL, where he participated in the design and analysis of fault-tolerant computer systems for aerospace applications. His research and teaching interests include fault-tolerant computing, VLSI architectures, VLSI testing, and microprocessor-based systems. He is the author of *The Design and Analysis of Fault-Tolerant Digital Systems* (Reading, MA: Addison-Wesley, 19??) and of more than 60 journal and converence articles. Dr. Johnson is the First Vice President of the IEEE Computer Society (Conferences and Tutorials), a member of the Executive Committee, an ex-officio member of the Board of Governors, and a member of the editorial board of the IEEE TRANSACTIONS ON COMPUTERS. He is also a member of the Technical Activities Board (TAB) Bookbroker Committee.

Dr. Johnson received the 1990 Outstanding Faculty Award from the STate Council of Higher Education in Virginia, the 1991 Frederick Emmons Terman Award from the American Society for Engineering Education, and the University of Virginia Alumni Association's Outstanding Young Faculty Award in 1989.

Authorized licensed use limited to: COLORADO STATE UNIVERSITY. Downloaded on September 19,2024 at 23:10:30 UTC from IEEE Xplore. Restrictions apply.