US005698967A

United States Patent [19]

Baer et al.

[11] Patent Number: 5,698,967

[45] Date of Patent: Dec. 16, 1997

[54] **BATTERY MANAGEMENT SYSTEM**

[75] Inventors: **Jose T. Baer**, Sacramento, Calif.; **Bill C. Davis**, Round Rock; **Richard J. Blanyer**, Smithville, both of Tex.

[73] Assignee: **Electrosource, Inc.**, San Marcos, Tex.

[21] Appl. No.: **676,799**

[22] Filed: **Jul. 8, 1996**

Related U.S. Application Data

[62] Division of Ser. No. 412,197, Apr. 3, 1995.

[51] **Int. Cl.**[6] **H01M 10/48**; H01M 10/44

[52] **U.S. Cl.** **320/48**; 320/35

[58] **Field of Search** 324/426, 431, 324/433; 320/48, 35

[56] **References Cited**

U.S. PATENT DOCUMENTS

3,740,636	6/1973	Hogrefe et al.	320/35 X
4,024,523	5/1977	Arnold et al.	340/249
4,052,717	10/1977	Arnold et al.	340/249
4,079,303	3/1978	Cox .	
4,217,536	8/1980	Izumi	320/48
4,238,721	12/1980	Deluca et al. .	
4,249,242	2/1981	Fleurier	364/442
4,278,970	7/1981	Streczyn et al.	340/599
4,322,766	3/1982	Becker et al.	361/17
4,553,081	11/1985	Koenck .	
4,571,533	2/1986	Dey	320/25
4,670,703	6/1987	Williams .	
4,709,202	11/1987	Koenck et al. .	
4,885,523	12/1989	Koenck .	
5,103,156	4/1992	Jones et al.	320/35
5,159,272	10/1992	Rao et al.	324/429
5,179,335	1/1993	Nor	320/21
5,187,425	2/1993	Tanikawa	320/31
5,202,617	4/1993	Nor	320/2
5,204,611	4/1993	Nor et al.	320/21

(List continued on next page.)

FOREIGN PATENT DOCUMENTS

29 17 114	11/1980	Germany .	
3740 331A1	6/1989	Germany	H01M 4/22
4132229A1	4/1993	Germany .	
4216045A1	11/1993	Germany	H02J 7/00
WO95 00978	1/1995	WIPO .	

OTHER PUBLICATIONS

"A Microcomputer-Based Battery Management System", by Zbigniew Noworolski and Eric Praetzel, International Telecommunications Energy Conference, Nov. 5–8, 1991, Proceedings Published by IEEE, 1992, pp. 177–180.

(List continued on next page.)

Primary Examiner—Peter S. Wong
Assistant Examiner—Patrick B. Law
Attorney, Agent, or Firm—Arnold White & Durkee

[57] **ABSTRACT**

A battery management system for management and control of a plurality of rechargeable batteries connected in series. A programmed central processing unit communicates with a plurality of battery modules and a bulk charger. Each of the battery modules includes a rechargeable battery, a sensor node including a plurality of battery sensors and a microcontroller that processes signals generated by the battery sensors, and a direct current charger. During a charging cycle the bulk charger provides a variable bulk charging current to the rechargeable batteries connected in series and each of the rechargeable batteries receive a charging current from individual direct current chargers positioned at each rechargeable battery. During the charging cycle, the voltage and temperature of the rechargeable batteries are monitored by the programmed central processing unit by means of the sensor nodes and the bulk charging current reduced by one half when any battery voltage reaches a predetermined clamping voltage. Once the bulk charging current is reduced to approximately 1 to 2 percent of the 3-hour discharge capacity for the rechargeable batteries, the bulk charger is turned off and the direct current chargers finish each battery charge independently.

4 Claims, 12 Drawing Sheets

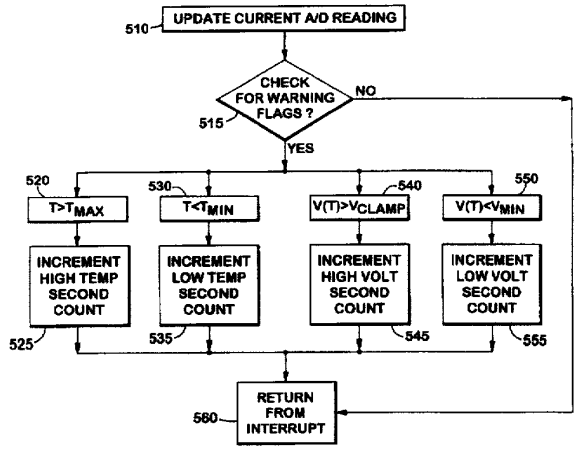

U.S. PATENT DOCUMENTS

5,229,704	7/1993	Knepper .	
5,250,904	10/1993	Salander et al. .	
5,280,320	1/1994	Mahoney	320/14
5,280,827	1/1994	Taylor et al.	180/165
5,302,902	4/1994	Groehl	324/434
5,305,629	4/1994	Campbell et al.	73/1 D
5,345,392	9/1994	Mito et al.	324/431 X
5,349,535	9/1994	Gupta	364/483
5,438,250	8/1995	Retzlaff	320/17

OTHER PUBLICATIONS

"Monitoring battery performance in Remote–Area Power–Supply (RAPS) systems", by M. Wade, A. Chew, and R. Geraghty, The Workshop on Development and Management of Battery Systems, Oct. 25–26, 1990, Published by Journal of Power Sources, vol. 35, No. 4, Sep. 1991, pp. 421–430.

"Modular battery charging system", Advertisement published by Mirabor Designs 1994.

"Charge Equalizing System For Life Stabilizing Of Long String Valve Regulated EV–Batteries", by Hans Tuphorn, Published in the Budingen Quarterly Report, Sep. 26, 1994.

"SmartGuard—Long–Life Battery Using Intelligent Modular Control System" by John Dunning, Ilker Bayraktar, and Benjamin Eiref, Sales Brochure published by Delco Remy and Aero Vironment, Jun. 3, 1994.

H. Schmidt, et al, "The Charge Equalizer A New System To Extend Battery Lifetime In PhotoVoltaic Systems, U.P.S. and Electric Vehicles, International Telecommunications Energy Conference. (INTELEC)", Paris, Sep. 17–30, 1993; vol. 2, 27 Sep. 1993, Societe Des Electriciens Et Des Electroniciens, pp. 146–151.

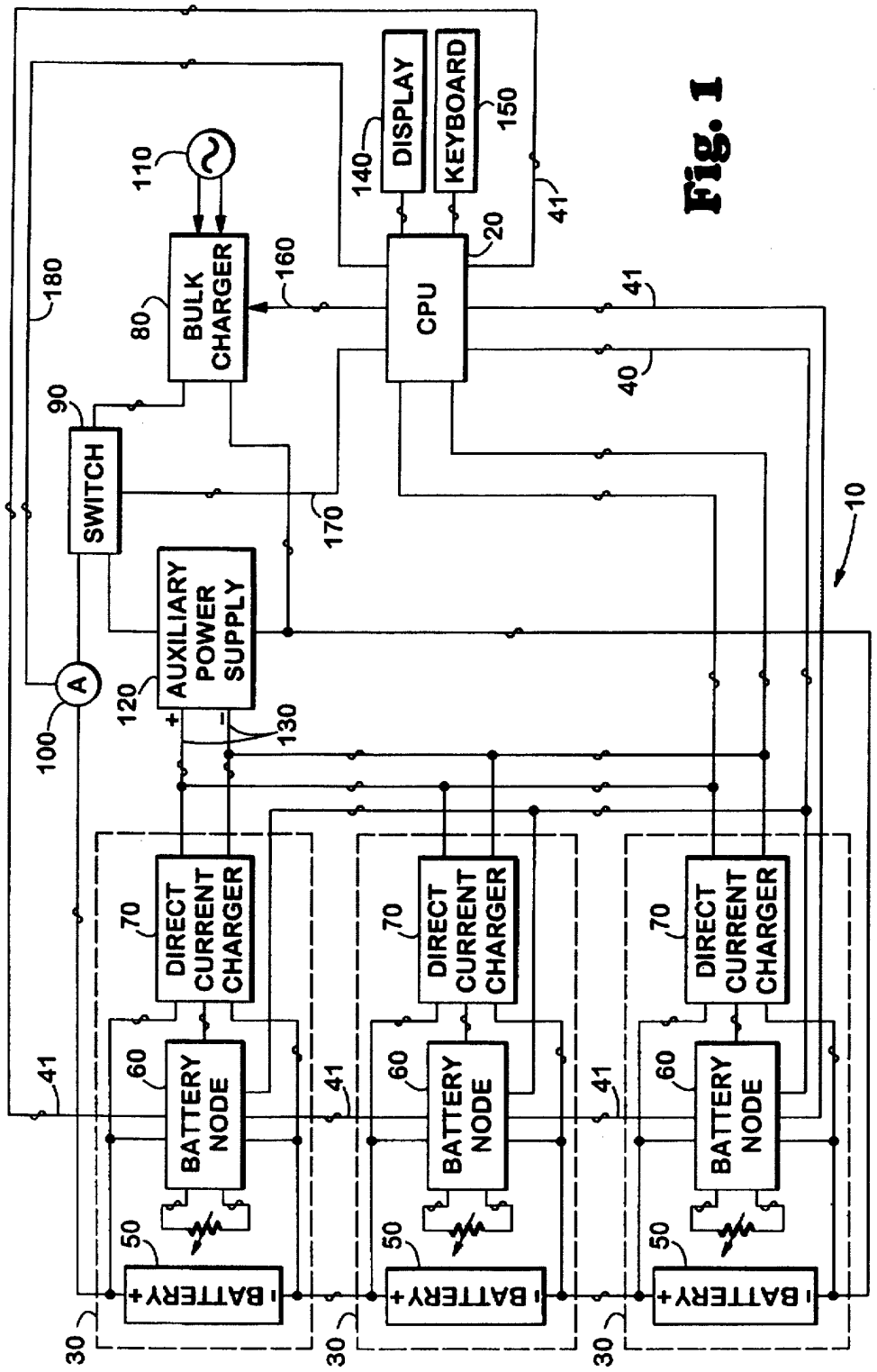
DISPLAY
KEYBOARD
BULK CHARGER
CPU
SWITCH
AUXILIARY POWER SUPPLY
DIRECT CURRENT CHARGER
BATTERY NODE
BATTERY
A
10
20
30
40
41
50
60
70
80
90
100
110
120
130
140
150
160
170
180

Fig. 1

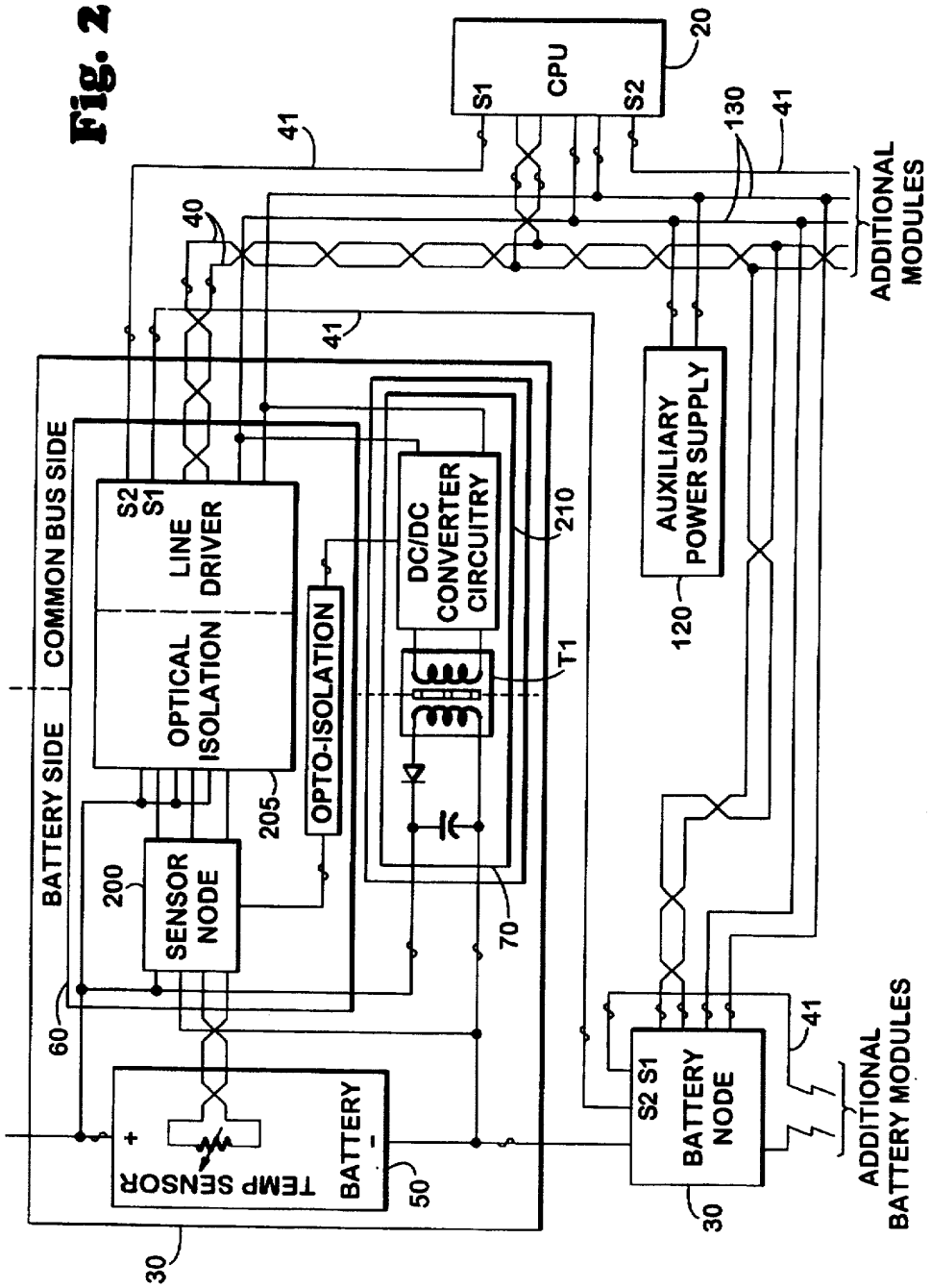
Fig. 2
CPU
S1
S2
20
41
130
40
ADDITIONAL MODULES
COMMON BUS SIDE
BATTERY SIDE
S2
S1
LINE DRIVER
OPTICAL ISOLATION
OPTO-ISOLATION
205
DC/DC CONVERTER CIRCUITRY
210
T1
AUXILIARY POWER SUPPLY
120
200
SENSOR NODE
60
70
TEMP SENSOR
BATTERY
50
30
BATTERY NODE
ADDITIONAL BATTERY MODULES

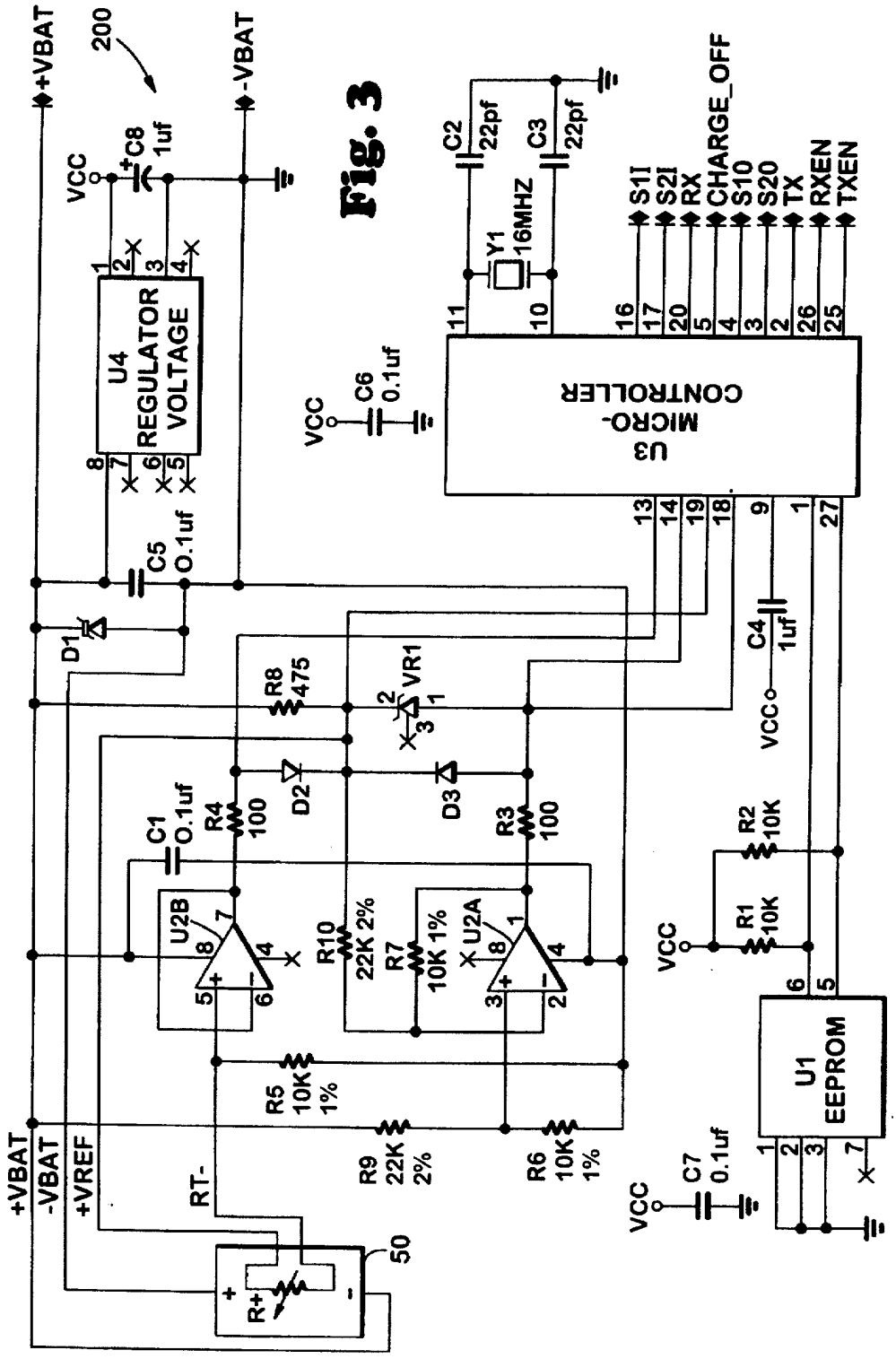
+VBAT
200
-VBAT
VCC
C8
1uf
U4
REGULATOR
VOLTAGE
C5
0.1uf
D1
C2
22pf
C3
22pf
Y1
16MHZ
S1I
S2I
RX
CHARGE_OFF
S1O
S2O
TX
RXEN
TXEN
U3
MICRO-
CONTROLLER
C6
0.1uf
C4
1uf
R8
475
VR1
D2
D3
C1
0.1uf
R4
100
R3
100
U2B
U2A
R10
22K 2%
R7
10K 1%
R2
10K
R1
10K
R5
10K
1%
R9
22K
2%
R6
10K
1%
U1
EEPROM
C7
0.1uf
+VREF
RT-
R+
50

Fig. 3

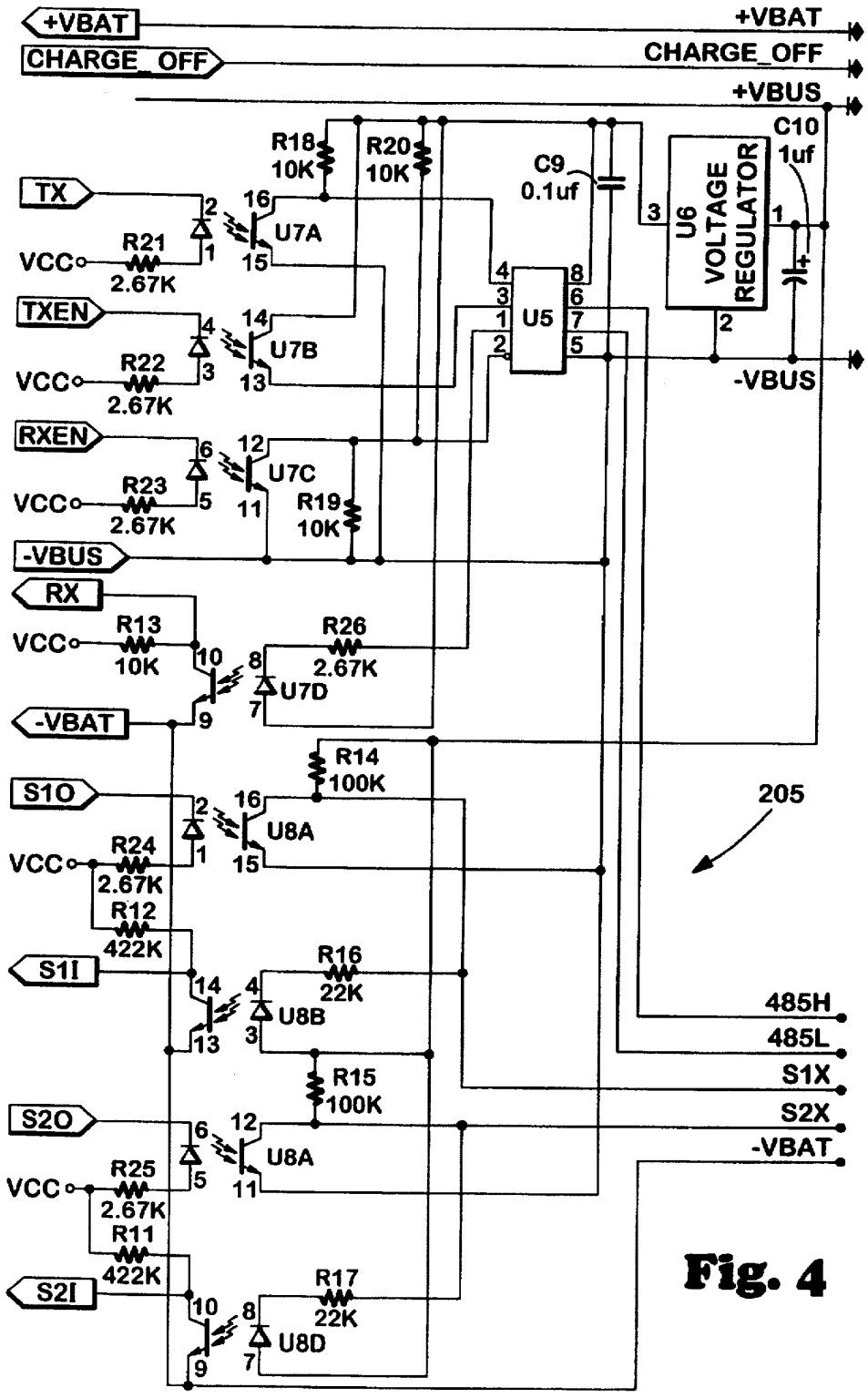
+VBAT
CHARGE_OFF
+VBUS
C10
1uf
R18
10K
R20
10K
C9
0.1uf
U6
VOLTAGE
REGULATOR
TX
VCC
R21
2.67K
U7A
TXEN
R22
2.67K
U7B
U5
-VBUS
RXEN
R23
2.67K
U7C
R19
10K
RX
R13
10K
R26
2.67K
U7D
-VBAT
R14
100K
S1O
U8A
205
R24
2.67K
R12
422K
S1I
R16
22K
U8B
485H
485L
S1X
R15
100K
S2O
S2X
-VBAT
R25
2.67K
R11
422K
S2I
R17
22K
U8D

Fig. 4

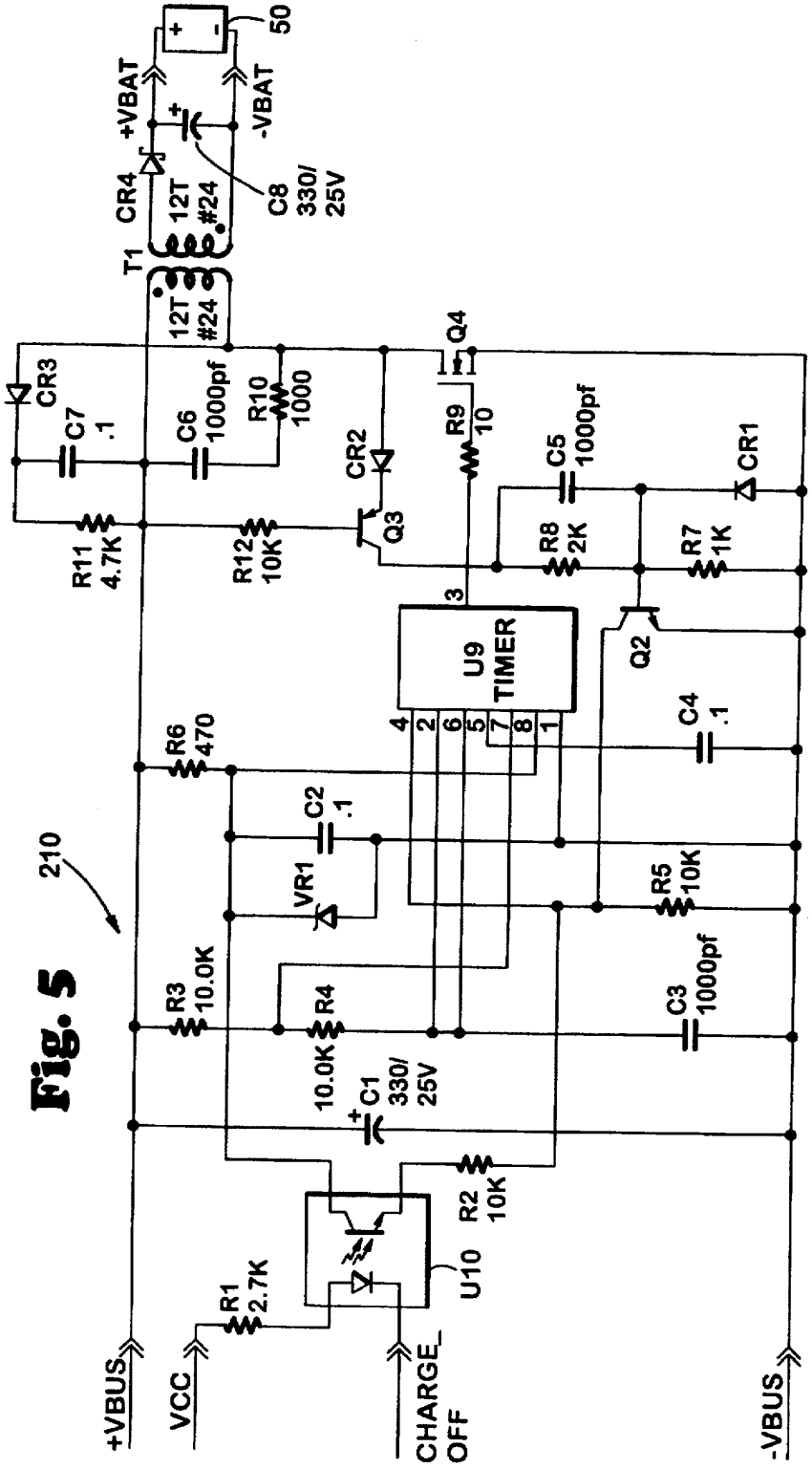
50
+VBAT
-VBAT
CR4
12T
#24
C8
330/
25V
T1
12T
#24
CR3
C7
.1
C6
1000pf
R10
1000
CR2
Q4
R9
10
C5
1000pf
CR1
R11
4.7K
R12
10K
Q3
R8
2K
R7
1K
U9
TIMER
Q2
C4
.1
R6
470
C2
.1
VR1
R5
10K
210
R3
10.0K
R4
10.0K
C3
1000pf
C1
330/
25V
R2
10K
U10
R1
2.7K
+VBUS
VCC
CHARGE_
OFF
-VBUS

Fig. 5

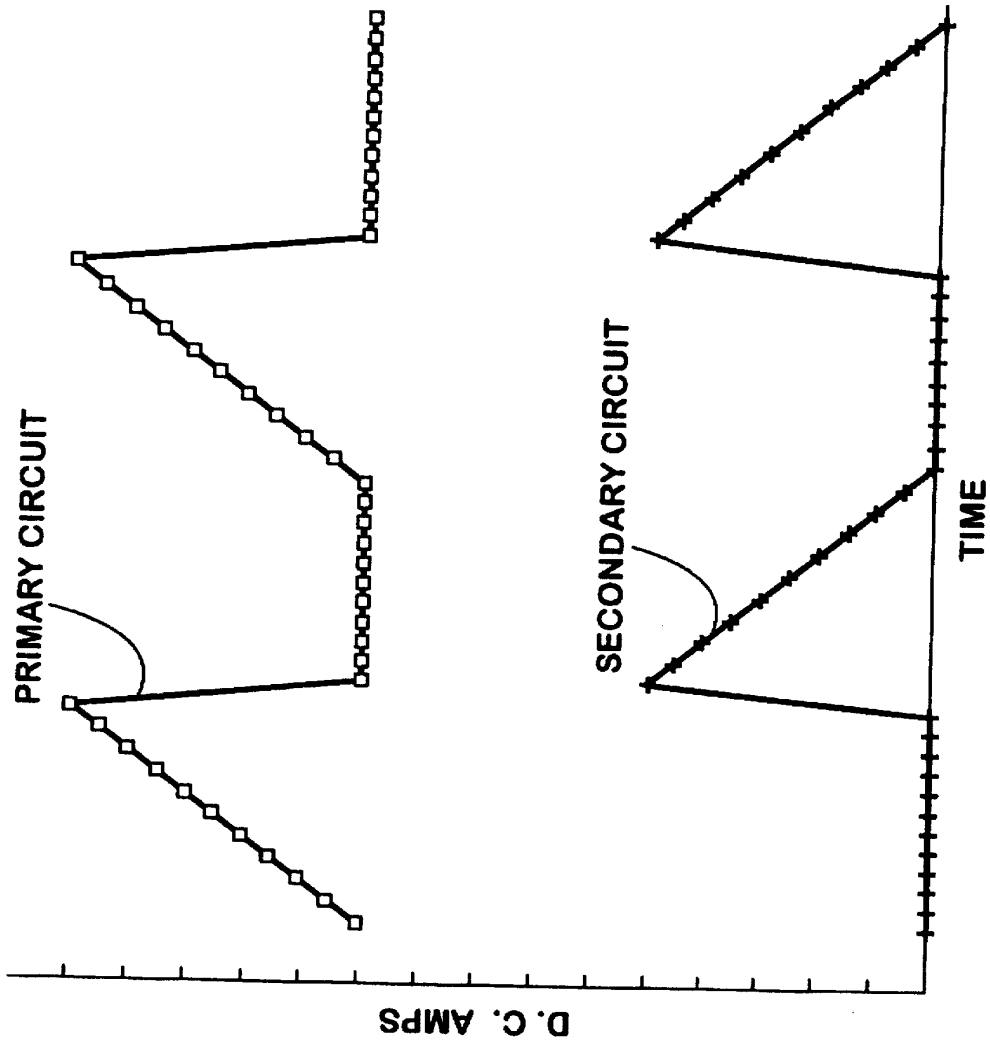

Fig. 6

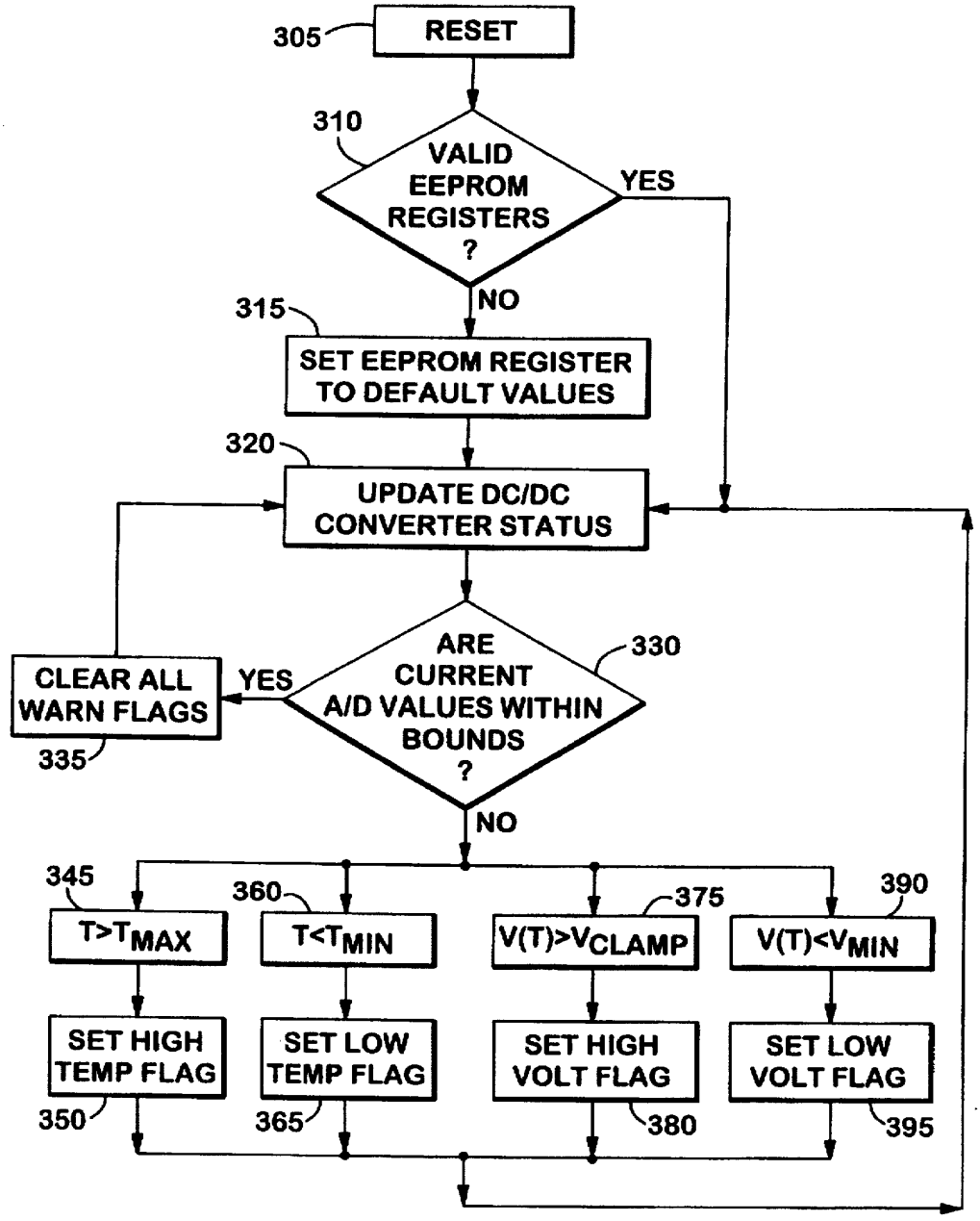
305
RESET
310
VALID EEPROM REGISTERS ?
YES
NO
315
SET EEPROM REGISTER TO DEFAULT VALUES
320
UPDATE DC/DC CONVERTER STATUS
330
ARE CURRENT A/D VALUES WITHIN BOUNDS ?
YES
CLEAR ALL WARN FLAGS
335
NO
345
T>TMAX
360
T<TMIN
375
V(T)>VCLAMP
390
V(T)<VMIN
SET HIGH TEMP FLAG
350
SET LOW TEMP FLAG
365
SET HIGH VOLT FLAG
380
SET LOW VOLT FLAG
395

Fig. 7

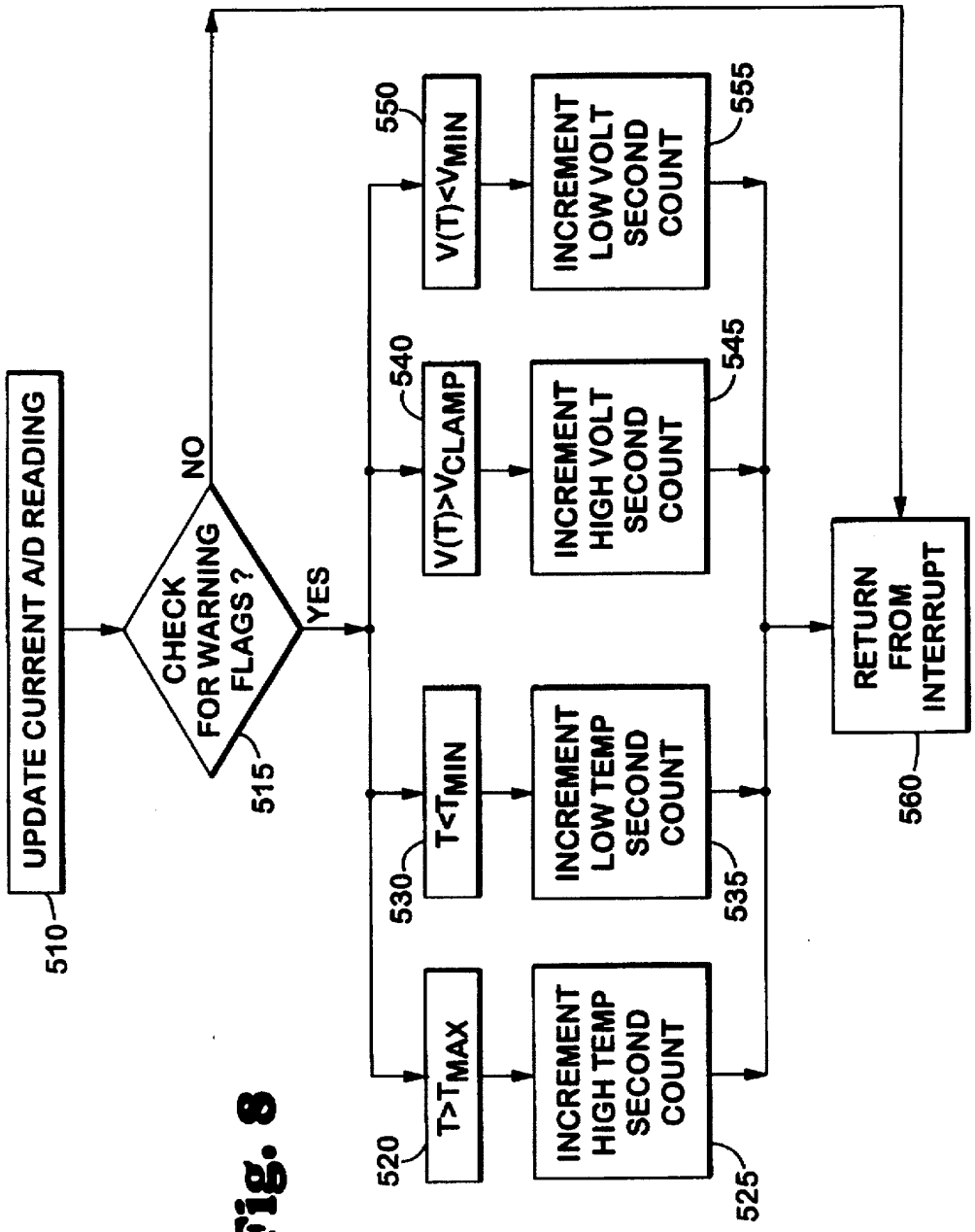
UPDATE CURRENT A/D READING
510
CHECK FOR WARNING FLAGS ?
515
NO
YES
T>TMAX
520
INCREMENT HIGH TEMP SECOND COUNT
525
T<TMIN
530
INCREMENT LOW TEMP SECOND COUNT
535
V(T)>VCLAMP
540
INCREMENT HIGH VOLT SECOND COUNT
545
V(T)<VMIN
550
INCREMENT LOW VOLT SECOND COUNT
555
RETURN FROM INTERRUPT
560

Fig. 8

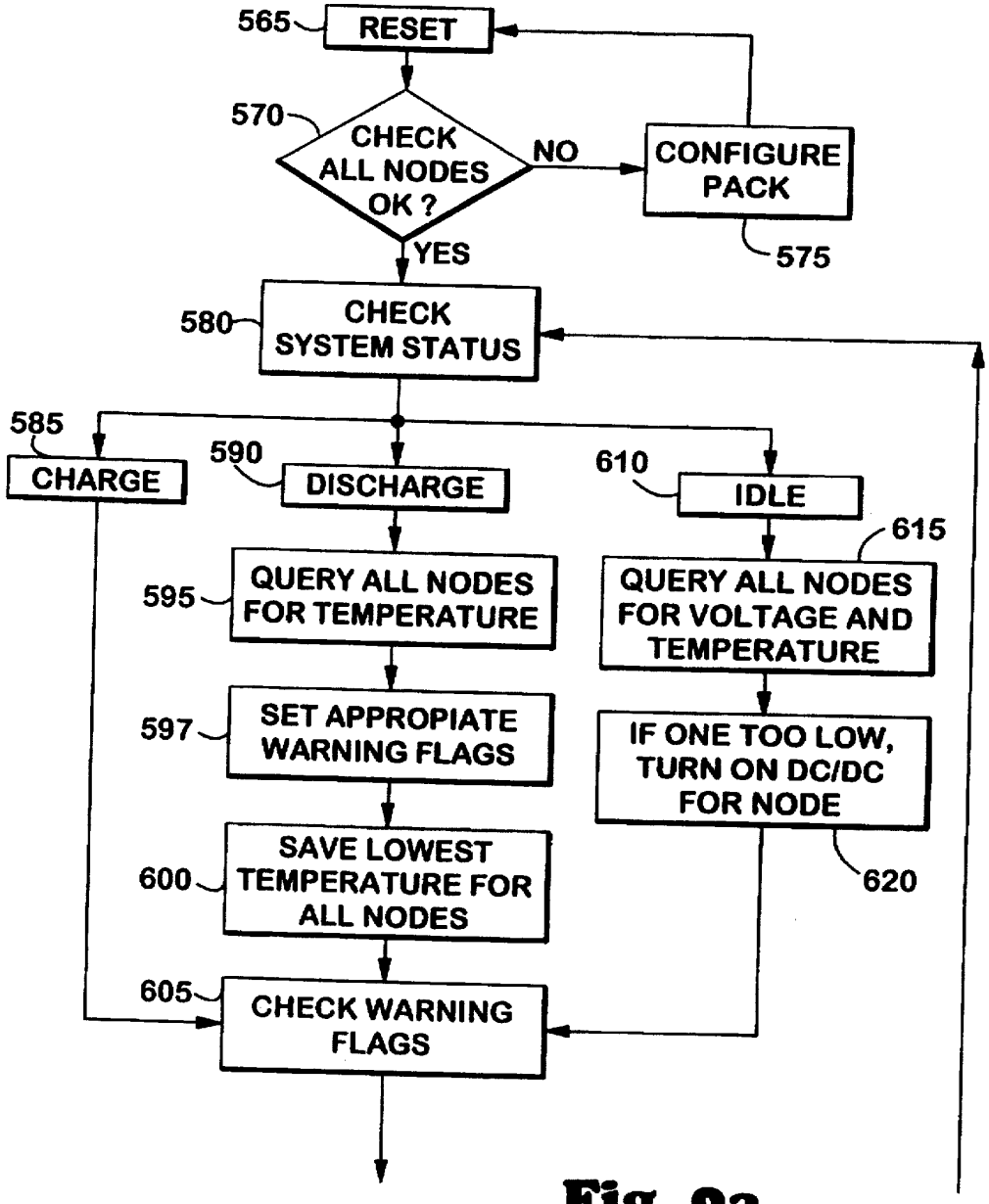
565
RESET
570
CHECK ALL NODES OK ?
NO
CONFIGURE PACK
575
YES
580
CHECK SYSTEM STATUS
585
CHARGE
590
DISCHARGE
610
IDLE
615
595
QUERY ALL NODES FOR TEMPERATURE
QUERY ALL NODES FOR VOLTAGE AND TEMPERATURE
597
SET APPROPIATE WARNING FLAGS
IF ONE TOO LOW, TURN ON DC/DC FOR NODE
600
SAVE LOWEST TEMPERATURE FOR ALL NODES
620
605
CHECK WARNING FLAGS

Fig. 9a

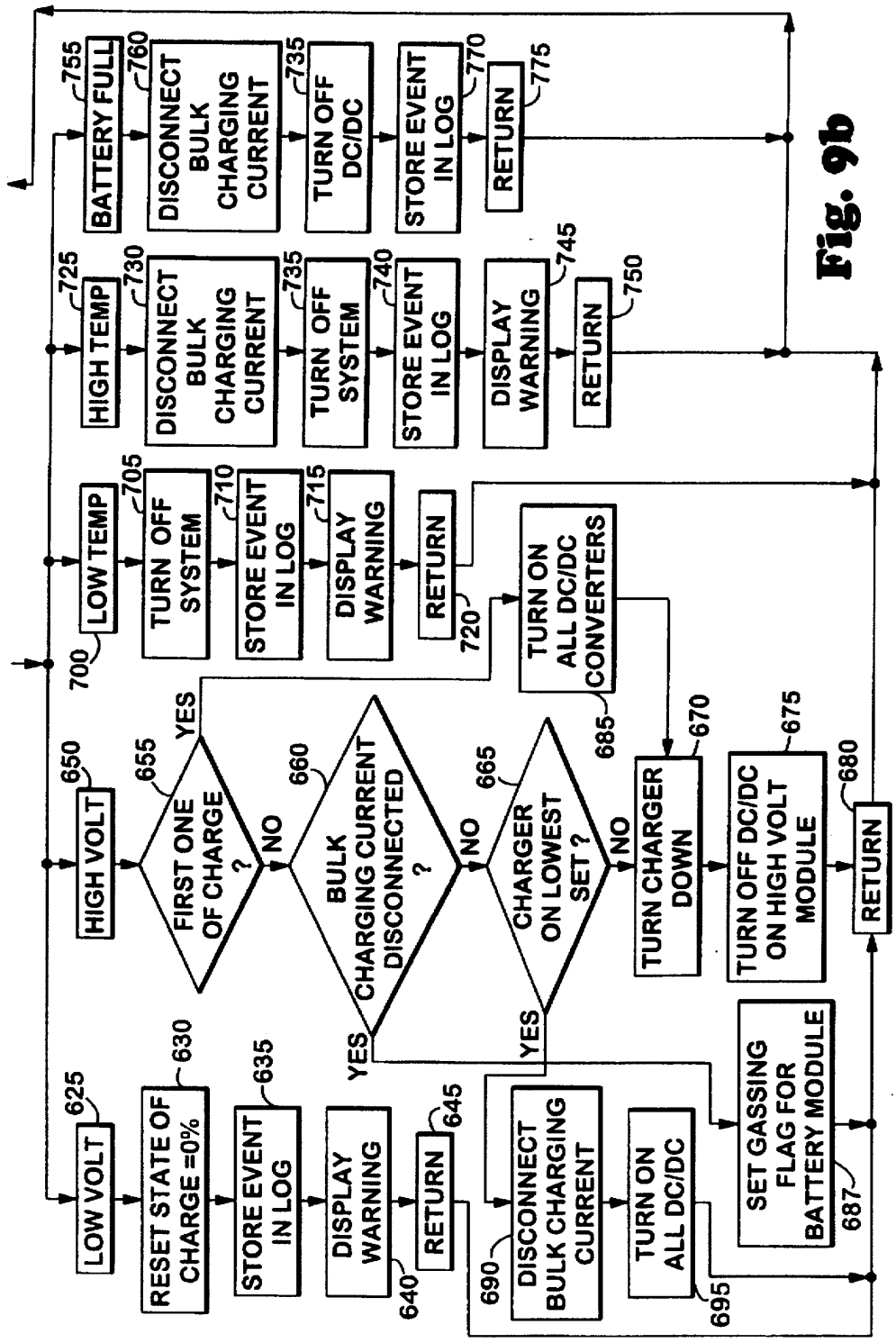
LOW VOLT
625
RESET STATE OF CHARGE =0%
630
STORE EVENT IN LOG
635
DISPLAY WARNING
640
RETURN
645
HIGH VOLT
650
FIRST ONE OF CHARGE ?
655
YES
NO
BULK CHARGING CURRENT DISCONNECTED ?
660
YES
NO
CHARGER ON LOWEST SET ?
665
YES
NO
DISCONNECT BULK CHARGING CURRENT
690
TURN ON ALL DC/DC
695
SET GASSING FLAG FOR BATTERY MODULE
687
TURN CHARGER DOWN
670
TURN OFF DC/DC ON HIGH VOLT MODULE
675
RETURN
680
LOW TEMP
700
TURN OFF SYSTEM
705
STORE EVENT IN LOG
710
DISPLAY WARNING
715
RETURN
720
TURN ON ALL DC/DC CONVERTERS
685
HIGH TEMP
725
DISCONNECT BULK CHARGING CURRENT
730
TURN OFF SYSTEM
735
STORE EVENT IN LOG
740
DISPLAY WARNING
745
RETURN
750
BATTERY FULL
755
DISCONNECT BULK CHARGING CURRENT
760
TURN OFF DC/DC
735
STORE EVENT IN LOG
770
RETURN
775

Fig. 9b

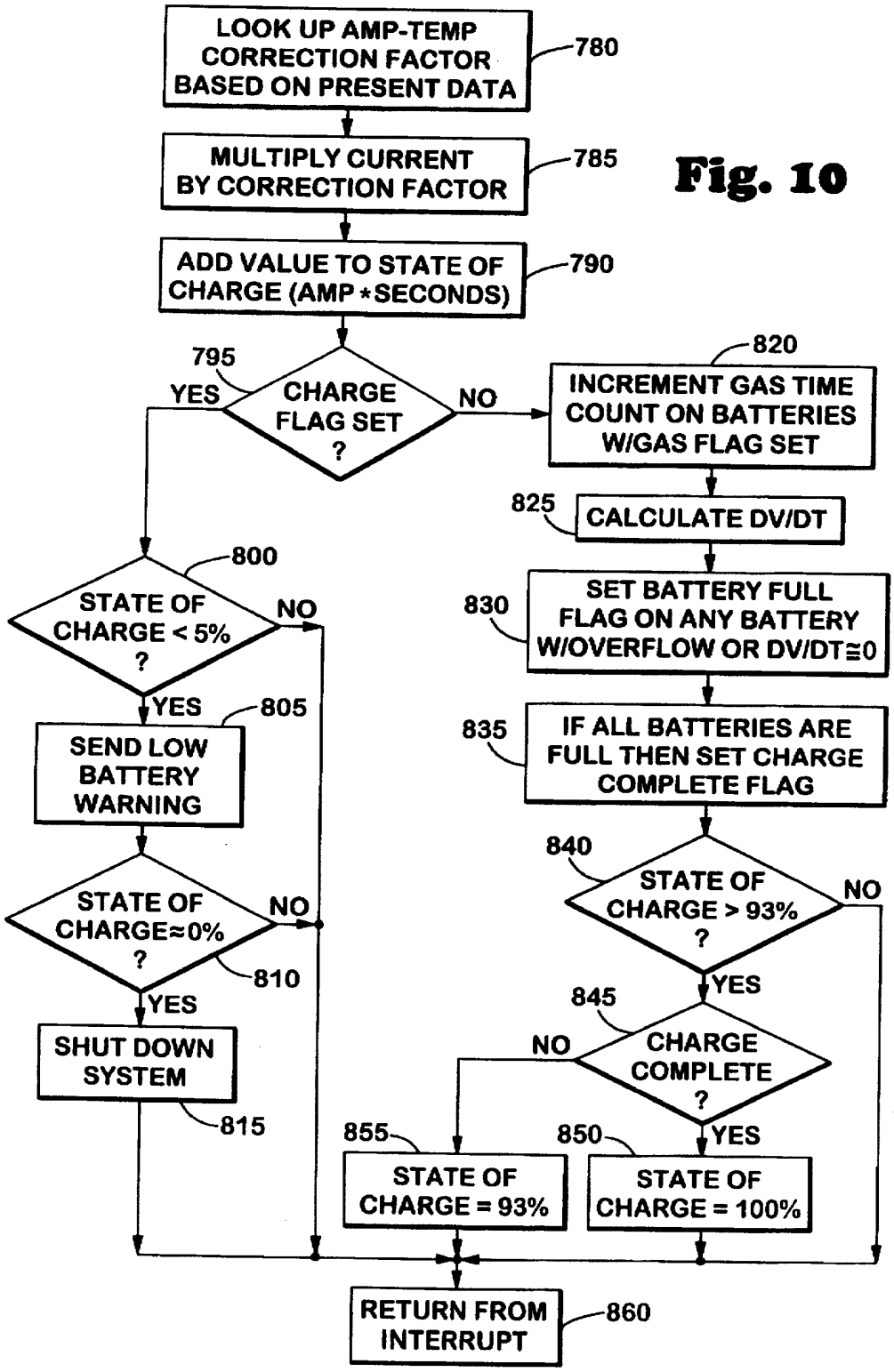
LOOK UP AMP-TEMP CORRECTION FACTOR BASED ON PRESENT DATA
780
MULTIPLY CURRENT BY CORRECTION FACTOR
785
ADD VALUE TO STATE OF CHARGE (AMP*SECONDS)
790
795
CHARGE FLAG SET ?
YES
NO
820
INCREMENT GAS TIME COUNT ON BATTERIES W/GAS FLAG SET
825
CALCULATE DV/DT
800
STATE OF CHARGE < 5% ?
NO
YES
805
SEND LOW BATTERY WARNING
STATE OF CHARGE≈0% ?
NO
810
YES
SHUT DOWN SYSTEM
815
830
SET BATTERY FULL FLAG ON ANY BATTERY W/OVERFLOW OR DV/DT≅0
835
IF ALL BATTERIES ARE FULL THEN SET CHARGE COMPLETE FLAG
840
STATE OF CHARGE > 93% ?
NO
YES
845
CHARGE COMPLETE ?
NO
YES
855
STATE OF CHARGE = 93%
850
STATE OF CHARGE = 100%
RETURN FROM INTERRUPT
860

Fig. 10

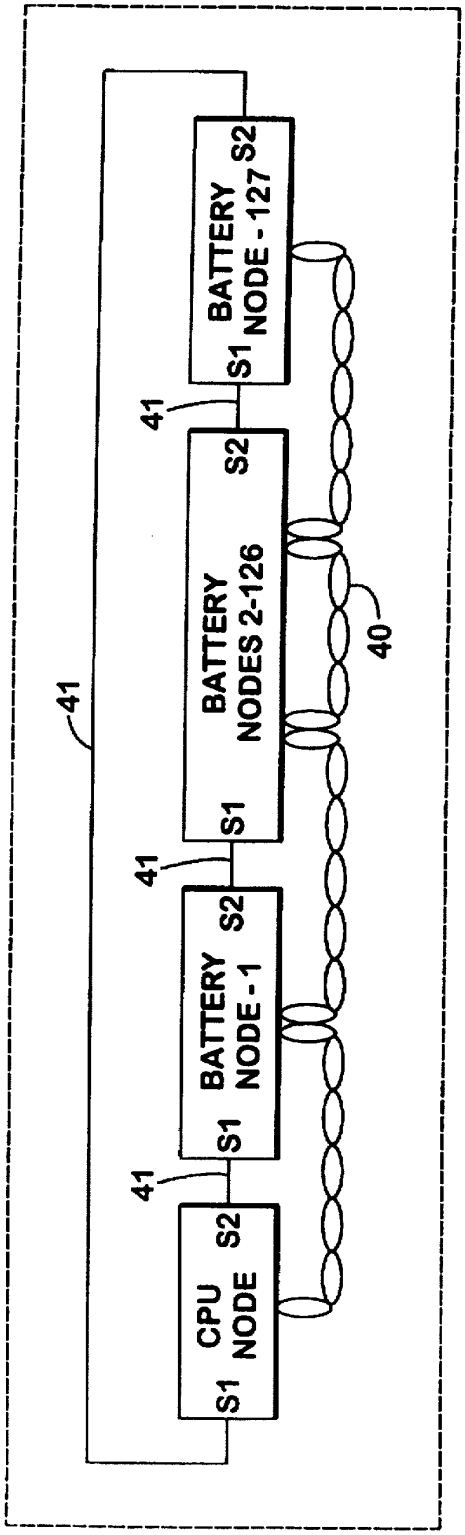
CPU NODE
S1
S2
41
BATTERY NODE - 1
S1
S2
41
BATTERY NODES 2-126
S1
S2
41
BATTERY NODE - 127
S1
S2
41
40

Fig. 11

BATTERY MANAGEMENT SYSTEM

This application is a divisional of application Ser. No. 08/412,197 filed Apr. 3, 1995.

All of the material in this application is subject to copyright protection under the copyright laws of the United States and of other countries. As of the first effective filing date of the present application, this material is protected as unpublished material.

However, permission to copy this material is hereby granted to the extent that the owner of the copyright has no objection to the facsimile reproduction by anyone of the patent document or patent disclosure, as it appears in the United States Patent and Trademark Office patent file or records, but otherwise reserves all copyright rights whatsoever.

BACKGROUND OF THE INVENTION

The present invention relates generally to the field of battery management systems, and more specifically it relates to control systems for controlling and monitoring the charging of rechargeable batteries.

The use of electrically powered vehicles has in recent years come to the forefront of efforts to conserve precious reserves of fossil fuels and reduce emissions of air pollutants. Electrically powered vehicles typically rely upon a battery power pack consisting of a plurality of batteries connected in series to provide motive force for the vehicles. Such battery power packs require periodic recharging and consequently some form of management to maintain the batteries at optimum charging conditions.

Conventional battery management systems provide management and control of the charging of such battery power packs by means of a programmed central processing unit which. in turn controls a single direct current charger which provides a variable charging current. Such conventional systems also typically utilize sensors which provide feedback signals based on the entire battery pack rather than individual modules. Such conventional systems then utilize various charging algorithms to provide a full battery charge to the entire battery pack by means of the single direct current charger.

Reliance, in conventional battery systems, upon a single direct current charger to provide charging current for the individual battery modules results in an inability to provide individual charging currents on an independent basis to the individual battery modules. Such conventional battery systems consequently are incapable of precise charging of a plurality of rechargeable batteries connected in series to a "full" condition, thus resulting in batteries which are either undercharged or overcharged thereby reducing the useful life of the batteries.

The present invention provides a battery management system in which a programmed central processing unit provides management and control of a plurality of battery modules, wherein each battery module includes a direct current charger in the form of a DC/DC converter. This permits the system to controllably provide a separate and independent charging currents to each battery module. The present invention thus permits a plurality of rechargeable batteries to be bulk charged to a predetermined level approximately equal to 93% of a "full" charge, and then individually charged to a "full" condition by means of DC/DC converters operating independently of one another and positioned within each of the battery modules.

SUMMARY OF THE INVENTION

In accordance with one aspect of the present invention, there is provided a battery management system comprising

a programmed central processing unit in communication with a plurality of battery modules. Each battery module comprises: a rechargeable battery; a sensor node that includes a temperature sensor, a voltage sensor, and a programmed microcontroller; and a direct current charger in the form of a DC/DC converter. The rechargeable batteries are, in turn, connected in series with a bulk charger, a control switch, and a current sensor. During the charging operation of the rechargeable batteries, the bulk charger, under the control of the. programmed central processing unit, provides a bulk charging current. Throughout the charging operation, the sensor nodes continuously provide the operating temperature and terminal voltage for each of the rechargeable batteries to the programmed central processing unit.

When the terminal voltage for any one of the rechargeable batteries first meets or exceeds a predetermined clamping voltage, the bulk charging current is reduced by a value such as one half of its former value, the DC/DC converters for the rechargeable batteries are turned on, and the DC/DC converter for the rechargeable battery whose terminal voltage met or exceeded the predetermined clamping voltage is turned off. As charging of the batteries continues, whenever another rechargeable battery's terminal voltage meets or exceeds the predetermined clamping voltage, the bulk charging current is again reduced by approximately one half, and the DC/DC converter for the battery whose terminal voltage met or exceeded the predetermined clamping voltage is turned off. This process continues until the bulk charging current has been reduced to approximately 1 to 2 percent of the 3-hour discharge capacity for the rechargeable batteries. At this point, the bulk charging current supplied to the batteries is interrupted by means of the control switch, and the charging of rechargeable batteries are completed on an individual basis by means of the DC/DC converters. After completion of the charging operation, the batteries are maintained at a full and ready condition by charging individual batteries using the DC/DC converters.

BRIEF DESCRIPTION OF THE DRAWINGS

The foregoing and other advantages of the invention will become apparent upon reading the following detailed description and upon reference to the drawings in which:

FIG. **1** is a schematic illustration of a battery management system with three battery modules;

FIG. **2** is a schematic illustration of one of the battery modules of FIG. **1**;

FIG. **3** is a schematic illustration of a sensor node;

FIG. **4** is a schematic illustration of a line driver with optical isolation;

FIG. **5** is a schematic illustration of a DC/DC converter;

FIG. **6** is a graphical illustration of the transformer current waveforms of the DC/DC converter;

FIG. **7** is a flow chart diagram of the main program for a sensor node;

FIG. **8** is a flow chart diagram of the sensor node one-second interrupt program;

FIGS. **9***a* and **9***b* show a flow chart diagram of the main program for the battery management system;

FIG. **10** shows a flow chart diagram of the battery management system one-second interrupt program; and

FIG. **11** is a schematic illustration of the signal port connections utilized in the battery management system.

DESCRIPTION OF PREFERRED EMBODIMENTS

Turning to the figures, the following description and the drawing figures pertain to an embodiment of the invention

directed to a lead-acid storage battery management system intended to provide power to an electric vehicle. The system includes a battery pack including a plurality of lead-acid batteries connected in series to be installed in a vehicle. Also to be installed in the vehicle are separate DC chargers for each battery, a sensory system for monitoring the batteries, an auxiliary power supply, various electrical connections permitting the system to be powered by a central or bulk charger, and instrumentation such as a programmed central processing unit (CPU) and microcontrollers located at each battery for performing various battery management functions. The CPU or other instrumentation records data from the sensory system, displays the data, coordinates charging of the individual batteries by the bulk charger and the individual DC chargers, processes input data, and generates various control signals to permit the management of the lead-acid batteries.

It will be recognized that other specific systems of the invention for other specific lead-acid battery systems, nickel-cadmium battery systems, etc. may typically require different operating voltages, operating conditions, and electrical components other than those described herein. It will be further recognized, however, that the principles and examples described herein are clearly applicable to such other systems.

Turning to FIG. 1, there is illustrated a battery management system **10**. A programmed central processing unit (CPU) **20** monitors and controls a plurality of battery modules **30**. The CPU **20** communicates with the battery modules **30** by means of a serial interface **40** and a signal port interface **41**. Each battery module **30** includes a rechargeable battery **50**, a battery node **60**, and a direct current charger **70**. The rechargeable batteries **50** are connected in series with a bulk charger **80**, a control switch **90**, and a current sensor **100**. An AC power supply **110** provides power for the bulk charger **80**. An auxiliary DC power supply **120**, which may be powered by the bulk charger **80**, provides DC power to the battery modules **30** by means of a power bus **130**. A display unit **140** provides a display of the operation of the CPU **20**, and a keyboard **150** provides a means of data input to the CPU **20**.

The CPU **20** includes a programmable central processing unit and associated dam I/O. The CPU **20** may be any general purpose programmable computer such as one based upon, for example, an INTEL or MOTOROLA microprocessor based architecture.

The CPU **20** controls the operation of the bulk charger **80** by means of a bulk charger control signal **160** in a well known manner. In a preferred embodiment, the bulk charger control signal **160** transmitted by the CPU **20** to the bulk charger **80** is a pulse width modulated signal, as is well known in the art. The bulk charging current is variable and typically proportional to the pulse width modulated signal **160**.

The CPU **20**, by means of a control signal **170**, controls the operation of a standard control switch **90**, which in a preferred embodiment is a standard single-pole/single-throw switch. The position of the control switch **90** is dependent upon the operating state of the system **10**. During a charging operation, with a bulk charging current provided by the bulk charger **80** to the batteries **50**, the batteries **50**, auxiliary power supply **120**, and bulk charger **80** are all connected. This permits the bulk charger **80** to provide a bulk charging current to the batteries **50** and also permits the auxiliary power supply **120** to provide power to each of the direct current chargers **70**. During a charging operation, with a bulk charging current not provided by the bulk charger **80**, the auxiliary power supply **120** is connected to the bulk charger **80**. This permits the auxiliary power supply **120** to provide power to each of the direct current chargers **70**. Finally, when the system **10** is idle or during discharging of the batteries **50**, the batteries **50**, the auxiliary power supply **120**, and the bulk charger **80** are all connected. This permits the auxiliary power supply **120** to be powered by the batteries **50** when the bulk charger **80** has been disconnected from the AC power supply **110** by the CPU **20**.

The current sensor **100** provides a signal **180** representative of the current level of the instantaneous level of the charging current provided by the bulk charger **80**. The current sensor **100** may be any standard current sensor that provides an output signal. In a preferred embodiment, the current sensor is a model HTA 500-S, manufactured by LEM of Milwaukee, Wis. Such a sensor provides a current measurement during discharge of 0 to 500 amps with an accuracy of ±2 amps, and a current measurement during charging of 0 to 50 amps with an accuracy of ±200 mA.

The auxiliary DC power supply **120** is preferably a DC/DC converter powered by either the batteries **50** in the battery pack or by the bulk charger **80**.

The system **10** includes a standard display **140** and keyboard **150** for use with the CPU **20**. In an alternative embodiment, the system **10** may be installed in a motor vehicle with the display **140** and keyboard **150** provided within the passenger compartment. In another alternative embodiment, a diagnostic port may be positioned on the CPU **20**, in a well known manner, to permit a service technician to access all of the information stored in the memory of the CPU **20** so that the service technician may perform repairs and scheduled maintenance on the system **10**. In this manner, the battery management system **10** permits service technicians to directly access the operating parameters of the system **10** and further access the operating history of the battery modules **30**.

Referring to FIG. 2, each battery module **30** includes a rechargeable battery **50**, a battery node **60**, and a direct current charger **70**. Each battery node **60** includes a sensor node **200** and a line driver **205**. Each direct current charger **70** includes a DC/DC converter **210**.

The battery node **60** monitors the operation of the battery **50** by means of the sensor node **200** and communicates the status of the rechargeable battery **50** to the CPU **20** using a serial data communications protocol by means of the line driver **205**. In a preferred embodiment, the sensor node **200** and the line driver **205** are optically isolated from one another by means of a plurality of optical isolators common to the line driver **205** to protect the CPU **20** from damage.

The direct current charger **70** provides a charging current to the rechargeable battery **50** by means of the DC/DC converter **210**. A transformer T1, within the DC/DC converter **210**, provides isolation between the rechargeable battery **50** and the power bus **130**. In an exemplary embodiment, the DC/DC converter **210** receives the power bus **130** voltage of approximately 9 to 16 volts DC and outputs a charging current to the rechargeable battery **50**. In a preferred embodiment, the converter **210** outputs a charging current having an average value of approximately 1 amp. The DC/DC converter **210** is directly controlled by a signal generated by the sensor node **200**. In a preferred embodiment, the sensor node **200** is optically isolated from the DC/DC converter **210** in order to protect the sensor node **200** from damage.

In another preferred embodiment, the average charging current output by the direct current charger **70**, in the form

of the DC/DC converter **210**, is set at approximately 1 percent of the 3-hour discharge capacity of the battery **50**. Thus, a battery with a 3-hour discharge capacity of 100 amp-hours would be provided a charging current having an average value of approximately 1 amp.

Communication between the CPU **20** and the sensor nodes **200** and line drivers **205** is accomplished by means of serial communications and node serialization incorporating the industry standard RS-485 communications protocol. The CPU **20** may be programmed in a known manner using any number of high level programming languages to permit communication with and control of the plurality of battery modules **30**. The software utilized by the CPU **20** includes the serial communication and node serialization commands, a battery management system main program, and a battery management system one-second interrupt program.

Referring now to FIG. **3**, the sensor node **200** will now be described.

The sensor node **200** includes resistors R1, R2, R5, R6, R9, and R10, capacitors C1, C2, C3, C4, C5, C6, C7, and C8, diodes D2 and D3, zener diodes D1 and VR1, an EEPROM U1, operational amplifiers U2A and U2B, a microcontroller U3, a voltage regulator U4, and a thermistor R_t.

The thermistor R_t mounted on the rechargeable battery **50** responds to temperature changes of the rechargeable battery **50**. The sensor node **200** is typically capable of temperature measurements ranging from about −40° C. to +50 C. with a resolution of ±2 C. by virtue of the thermistor R_t. In a preferred embodiment, the thermistor R_t is a model WN222 temperature sensor, available from the Sensor Scientific Company of New Jersey. The sensor node **200** further provides a voltage measurement range of about 9–6 VDC with an accuracy of ±25 mV. The operating range of the sensor node **200** ranges from about −40° C. to +50° C. In a well known manner, the thermistor R_t provides a measurement of the temperature of the rechargeable battery **50** by virtue of its negative temperature coefficient of resistance. The varying resistance, of the thermistor R_t generates a varying voltage signal RT- on an input to a standard operational amplifier U2B. The varying voltage signal RT- is amplified by the operational amplifier U2B and sent to an A/D converter within a microcontroller U3.

Any number of industry standard 8-bit microcontrollers may be used. In a preferred embodiment, the microcontroller U3 is an 8 bit 87C752 microcontroller manufactured by North American Phillips. The microcontroller U3 includes standard inputs and outputs which include: digital I/O at pins **2**, **3**, **4**, **5**, **16**, **17**, **20**, **25**, and **26**; read/write access to the EEPROM U1 via pins **1** and **27**; clock inputs at pins **10** and **11**; a reset input at pin **9**; A/D inputs at pins **13**, **14**, **18**, and **19**. The operation and performance characteristics of the microcontroller U3 are considered well known.

A rechargeable battery terminal voltage signal +VBAT representative of the terminal voltage across the terminals of the rechargeable battery **50** is sent through a voltage divider consisting of resistors R9 and R6. In an exemplary embodiment, R9 is 22K resistor and R6 is a 10K resistor. The +VBAT signal is then fed through a standard operational amplifier U2A and the amplified signal is then sent to the A/D converter within the microcontroller U3. The microcontroller U3 is thus able to monitor at all times the operating temperature and terminal voltage of the rechargeable battery **50**.

An standard EEPROM U1 permits the microcontroller U3 to store certain parameters non-volatilely, so that if the sensor node **200** ever loses power those registers are maintained. The EEPROM U1 includes pins **1**, **2**, and **3** connected to ground, pins **5** and **6** which provide read/write access to the EEPROM U1 storage registers connected to pins **1** and **27** of the microcontroller U3, and a test connection at pin **7**. The operation and performance characteristics of the EEPROM U1 are considered well known.

The microcontroller U3 contains algorithms which allow the sensor node **200** to sense the rechargeable battery terminal voltage and rechargeable battery operating temperature and communicate with the CPU **20**. The microcontroller U3 further contains conventional circuitry, that performs the analog to digital conversion, conventional algorithms which allow it to communicate with the EEPROM U1, and conventional algorithms which allow it to send the logic signals to the line driver **205** and receive the logic signals from the line driver **205**.

Capacitors C1, C2, C3, C4, C5, C6, C7, and C8 are included in the sensor node **200** for decoupling, to get rid of high frequency noise as is well known in the art.

The crystal Y1 provides a clock source for the microcontroller U3 as is well known in the art. In a preferred embodiment a 16 megahertz crystal is utilized as a clock source for the microcontroller U3 at pins **10** and **11**.

The sensor node **200** further includes an industry standard +5 volt programmable low dropout voltage regulator U4 which receives +VBAT at pin **8**, which is typically about +12 volts, and generates a regulated +5 volt power supply VCC at pin **1** for the sensor node **200**. The regulator U4 further includes pins **2**, **4**, **5**, **6**, and **7** which are unconnected, and pin **3** which is tied to −VBAT, which is typically about 0 volts. The operation and performance characteristics of the voltage regulator U4 are considered Well known.

VCC is a 5 volt signal generated from the voltage regulator U4 on the sensor node **200**. +VBAT, which in an exemplary embodiment is about 12 volts, is the positive side of the rechargeable battery **50**. −VBAT, which is nominally ground, is the negative side of the rechargeable battery **50**. TX is transmitted data which is output from pin **2** of the microcontroller U3. RX is data received from the serial interface **40** that has been optically isolated and is sent back to the sensor node **200** and is received at pin **20** of the microcontroller U3. RXEN and TXEN are the receive and transmit enable signals for the line driver **205** which are transmitted from pins **26** and **25** of the microcontroller U3. CHARGE_OFF is a signal sent to the DC/DC converter **210** from pin **5** of the microcontroller U3 which turns the DC/DC converter **210** on and off. S11 and S21 are node serialization signals received at pins **16** and **17** of the microcontroller U3 while S10 and S20 are node serialization signals transmitted from pins **3** and **4** of the microcontroller U3.

The operational amplifier U2A utilizes resistors R6, R7, R9, and R10 for gain adjustment and offset adjustment in a well known manner. In an exemplary embodiment, resistors R6 and R7 are 10K resistors while resistors R9 and R10 are 22K resistors. These resistors determine a gain and offset for the operational amplifier U2A, and their function is to help ensure in an exemplary embodiment that an input voltage range of about 5 volts to 16 volts (which is the typical rechargeable battery terminal voltage for a lead-acid battery utilized in motor vehicles), is converted to an A/D range of about 0 volts to 5 volts.

The operational amplifier U2B, which receives the signal RT- from the thermistor R_t, utilizes a fixed resistor R5. In an exemplary embodiment, the fixed resistor R5 is a 10K resistor which ensures that the signal off the lower side of the

thermistor R_t throughout the temperature range from about −40° C. to +50° C. will be converted to a signal in the range of about 0 to 5 volts.

The resistors R1 and R2 permit communication between the microcontroller U3 and the EEPROM U1 in a well known manner. Resistors R3, R4, and RS, diodes D2 and D3, and zener diode VR1 facilitate operation of the A/D converter of the microcontroller U3 with the operational amplifiers U2A and U2B in a well known manner. The particular values for these components will vary, in a well known manner, as a function of the specific components chosen for the EEPROM U1, operational amplifiers U2A and U2B, and microcontroller U3 as well as the specific signal levels involved in a particular application of the system **10**.

An industry standard zener diode D1 is provided to protect the A/D converter resident in the microcontroller U3 from over voltage.

The microcontroller U3 contains programs that permit it to monitor the rechargeable battery **50**, update the nonvolatile registers of the EEPROM U1, communicate with the CPU **20** and control the DC/DC converter **210**. The programs utilized by the microcontroller U3 include a sensor node main program, serial communication and node serialization algorithms, and a one-second interrupt. More detailed program steps of the sensor node main program and sensor node one-second interrupt are discussed with reference to FIGS. **7** and **8**.

In the preferred embodiment disclosed herein, the component parts used in the sensor node **200** include: R1, R2, R5, R6, R7 which are 10K resistors; R9 and R10 which are 22K resistors; C1, C5, C7 which are 0.1 uF capacitors; C2 and C3 which are 22 pF capacitors; C4 and C8 which are 1 uF capacitors; D2 and D3 which are diodes, part no. 1N5818MCT, available from Motorola; D1 which is a diode, part no. 1.5SMC20AT3, available from Motorola; VR1 which is a diode, part no. LT1029CZ, available from Linear Tech Inc.; U1 which is a 256 Byte EEPROM, part number PCF8582E2D, available from North American Phillips; U2A and U2B which are operational amplifiers, part no. LM358M, available from National Semiconductor; U3 which is a 8-bit microcontroller, part no. S87C752-1DB, available from Noah American Phillips; a voltage regulator U4, part no. LT1121CS8-5, available from Linear Tech Inc.; and a thermistor R_t, model no. WN222, available from the Sensor Scientific Company of New Jersey.

Referring now to FIGS. **4**, the line driver **205** will now be described.

The line driver **205** translates logic level signal TX from the sensor node **200** into signals **485L** and **485H** over the serial data bus **40**, and also translates serial signals **485L** and **485H** back to logic level signal RX, maintains isolation between the serial data bus **40** and the +VBAT and −VBAT signals, and permits serialization of the battery nodes **60** by transmitting and receiving the signals S1X and S2X.

The line driver **205** includes resistors R11, R12, R13, R14, R15, R16, R17, R18, R19, R20, R21, R22, R23, R24, R25, and R26, capacitors C9 and C10, optocouplers U7A, U7B, U7C, U7D, U8A, U8B, U8C, and U8D, an RS-485 driver/receiver U5, and a voltage regulator U6.

The line driver **205** receives signals +VBUS, TX, VCC, TXEN, RXEN, −VBUS, S10, S20, 485H, 485L, S1X, and S2X. +VBUS/−VBUS are provided by the power bus **130**. The signal TX is data transmitted from the sensor node **200**. The signals RXEN and TXEN are the enable signals for the line driver **205** and transmitted by the sensor node **200**. S10 and S20 are the node serialization signals transmitted by the sensor node **200**. VCC is the 5 volt signal generated from the voltage regulator U4 on the sensor node **200**.

The signal +VBUS in turn powers the line driver **205** by means of a +5 volt voltage regulator U6. The voltage regulator U6 provides a 5 volt supply VOUT for a, RS-485 driver/receiver U5. The voltage regulator U6 receives +VBUS at pin **1** and outputs VOUT at pin **3** while pin **2** is tied to −VBUS. The operation and performance characteristics of the voltage regulator U6 are considered well known.

The driver/receiver U5 is manufactured by MAXIM of Sunnyvale, Calif. It is an industry standard RS-485 driver/receiver. The driver/receiver U5 transmits and receives signals **485L** and **485H** at pins **6** and **7**. Pin **5** is connected to −VBUS while pin **8** is connected to VOUT generated by the voltage regulator U6. Pin **4** is connected to optocoupler U7A and thereby receives data transmitted by the sensor node **200** to the line driver **205**. Pin **3** is connected to optocoupler U7B that enables data transmission from the line driver **205** to the serial data bus **40**. Pin **1** is connected to optocoupler U7D and thereby transmits data from the line driver **205** to the sensor node **200**. Pin **2** is connected to optocoupler U7C that enables the transmission of data from the line driver **205** to the sensor node **200**. The operation and performance characteristics of the RS-485 driver/receiver U5 are considered well known.

The signal VCC, which is entirely isolated from the +VBUS bus, powers the light emitting diode portion of the optocouplers U7A, U7B, U7C, U8A, and U8C, signal VOUT powers the light emitting diode portion of the optocouplers U7D, and +VBUS powers the light emitting diode portion of the optocouplers US8 and U8D. The optocouplers U7A thru U8D are industry standard devices having high speed transistor outputs. The optocouplers provide isolation of about 500 volts DC. The operation and performance characteristics of the optocouplers are considered well known.

The signal TX is the transmitted data signal received by the line driver **205** from the sensor node **200**. When the magnitude of the signal TX is less than the magnitude of the signal VCC, the light emitting diode within the optocoupler U7A illuminates and the optocoupler U7A. transmits a signal to the driver/receiver U5.

The signal −VBUS is the negative side of the 12 volt power supply for the line driver **205** and it is also isolated from VCC.

The signals RXEN and TXEN are the enable signals which are optically isolated through the optocouplers U7B and U7C.

The line driver **205** communicates with the CPU **20** by means of signals S1X, S2X, **485H**, and **485L**. The signals SIX and S2X allow the CPU **20** to assign addresses and locate individual sensor nodes **200** as a part of the implementation of the serial communications and node serialization procedure. The use of the signals SIX and S2X is described in detail in the discussion of the serial communications and node serialization of the battery management system **10**. The signals **485L** and **485H** are serial data transmitted and received by the line driver **205** to and from the CPU **20**.

The signal RX is received data from the serial interface **40** that has been optically isolated and is sent back to the sensor node **200**.

The signal −VBAT is the negative side of the rechargeable battery **50** and it is optically isolated from the +VBUS/−VBUS.

Capacitors C9 are C10 are included in the line driver **205** for decoupling, to eliminate high frequency noise as is well known in the art. Resistors R11, R12, R13, R14, R15, R16, R17, R18, R19, R20, R21, R22, R23, R24, R25, and R26 are included in the line driver to permit proper operation of the optocouplers U7A through U8D in a well known manner. The specific values for these components will vary, in a well known manner, as a function of the specific components chosen as well as the signal levels for a specific application of the system **10**.

In the preferred embodiment disclosed herein, the component parts used in the line driver. **205** include: R11 and R12 which are 422K resistors; R13 which is a 10K resistor; R14 and R15 which are 100K resistors; R16 and R17 which are 22K resistors; R18, R19, and R20 which are 10K resistors; R21, R22, R23, R24, R25, and R26 which are 2.67K resistors; C9 which is a 0.1 uF capacitor; C10 which is a 1 uF capacitor; opto-isolators U7A, U7B, U7C, U7D, U8A, U8B, U8C, and U8D, part numbers PS2501-4, manufactured by Nippon Electric Corporation; an RS-485 driver/receiver U5, part number MAX487CSA, manufactured by MAXIM of Sunnyvale, Calif.; and a voltage regulator U6, part number MC78M05CT, manufactured by Motorola.

Turning now to FIGS. **5** the DC/DC converter **210** will now be described.

The DC/DC converter **210** includes resistors R1, R2, R3, R4, R5, R6, R7, R8, R9, R10, R11, and R12, capacitors C1, C2, C3, C4, C5, C6, C7, and C8, diodes CR1, CR2, and CR3, zener diodes ZR1 and CR4, transistors Q1, Q2, Q3, and Q4, CMOS timer U9, optocoupler U10, and transformer T1.

The purpose of the DC/DC converter **210** is to transfer energy from the common voltage bus **130** (indicated by +VBUS/−VBUS) to the rechargeable battery **50**. It operates in a current mode which allows energy to be transferred, regardless of the bus voltage range compared to the rechargeable battery terminal voltage, within certain limits. Typical limitations would be bus voltage from about +6 v to +24 v and a rechargeable battery voltage from about +6 v to +16 v. The DC/DC converter **210**, on or off state, is controlled from the CPU **20**, by means of the signal CHARGE_OFF generated by the sensor node **200**, based upon the charging requirements as controlled by the main program for the battery management system.

In a preferred embodiment the circuit parameters are set to deliver an average current of approximately 1 percent of the 3-hour discharge capacity of the rechargeable battery **50** when the DC/DC converter **210** is enabled. In an exemplary embodiment, for a battery **50** with a 3-hour discharge capacity of 100 amp-hours, the DC/DC converter **210** provides an average current of 1 amp to the rechargeable battery **50** when the DC/DC converter **210** is enabled.

The DC/DC converter **210** is a "flyback" type wherein energy is alternately transferred from the power bus **130** (+VBUS/−VBUS) to the transformer T1 core, then from the core to the rechargeable battery **50**. In the first half of the cycle, a transistor Q4 is "ON" which impresses the bus voltage across the primary of the transformer T1. A current ramp is begun which follows the equation:

$$\text{Current}=\text{Bus voltage}\times\text{Time ON/Primary inductance}$$

When Q4 is turned "OFF", the core energy is transferred to the rechargeable battery **50** according to the same equation. The current waveforms for the primary and secondary of the transformer T1 are illustrated in FIG. **6**. The current ramp peaks are controlled in a well known manner to provide an average current flow to the rechargeable battery **50** of approximately 1 percent of the 3-hour discharge capacity of the rechargeable battery **50**. In an exemplary embodiment, for a battery **50** with a 3-hour discharge capacity of 100 amp-hours, the DC/DC converter **210** provides an average current of 1 amp ±250 mA to the rechargeable battery **50**.

Referring back to FIG. **5** U10 is an optocoupler which provides isolated OFF/ON control of the DC/DC converter **210**. When the optocoupler U10 is ON, the DC/DC converter **210** is ON.

The CMOS timer U9 includes standard inputs and outputs which include: a connection to ground GND at pin **1**, a trigger input TRIG at pin **2**, an output signal OUT at pin **3**, a reset input RESET at pin **4**, a control input CONT at pin **5**, an input threshold THRESH at pin **6**, a discharge input DISCH at pin **7**, and a power supply input VDD at pin **8**. The operation and performance characteristics of the CMOS timer U9 are considered well known.

The CMOS timer U9 is configured in a well known manner as an astable oscillator which outputs a square wave of approximately 50% duty cycle when free running with a bus voltage of +12 v. For oscillations to occur, the RESET voltage on pin **4** of U9 must be greater than approximately 1 volt. The time constants for the oscillator U9 are determined in a well known manner by resistors R3, R4, and capacitor C3. As the bus voltage is increased above 12 volts, a zener diode VR1 clamps the input voltage on pin **8** of U9 to +12 volts while the timing resistor R3 remains connected directly to +VBUS. As the bus voltage increases, the charge current through R3 increases to C3 and decreases the ON time of the circuit. This balances the product of bus voltage and ON time in the above equation, so as to provide a constant peak in the current ramp each cycle. This helps to prevent variations in bus voltages from radically changing the battery charging current. As the bus voltage decreases below 12 v, the DC/DC converter **210** continues to operate, but at a reduced current.

The OFF time during actual circuit operation, in lieu of free running, is determined by the core dump time of the transformer T1. Core dump is sensed by monitoring the drain voltage of Q4. Until dump is completed, the drain voltage is higher than the bus voltage. Before dump is complete, transistor Q3 is turned ON through diode CR2. This turns ON transistor Q2 which holds U9 in the RESET condition and prevents the next ON cycle. Immediately after dump the drain voltage drops below the bus voltage and RESET is released, thereby initiating the next charge cycle. A resistor R10 and a capacitor C6 provide damping for the parasitic oscillations when Q4 is turned OFF. A resistor R11, capacitor C7, and a diode CR3 clamp the leakage spike after Q4 turns OFF and prevents damage to Q4. Capacitors C1 and C8 smooth out the current pulses during the charge/dump cycles, respectively. Zener diode CR4 is the output rectifier for the AC voltage appearing on the transformer T1 secondary.

The optocoupler U10 and transformer T1 both provide isolation of 500 volts DC, thereby protecting the battery management system components from voltage transients.

Other circuit elements in the DC/DC converter **210** simply provide the proper voltage/current control to maintain proper parameter needs in a well known manner. Their specific component values will vary, in a well known manner, as a function of the specific components selected for a specific application of the system **10**.

In the preferred embodiment disclosed herein, the component parts used in the DC/DC converter **210** include: the

optoisolator U **10** which is an integrated circuit, optoisolator with photo transistor output, part number PS2501-1, manufactured by NEC; U9 which is an integrated circuit **555** timer, part number TLC555CP, manufactured by Texas Instruments; Q2 which is a transistor, part number MPS2222, manufactured by Motorola; Q3 which is a transistor, part number MPS2907, manufactured by Motorola; Q4 which is a transistor, part number IRFZ40, manufactured by Motorola; CR1, CR2, and CR3 which are all diodes, part numbers 1N4937, manufactured by Motorola; CR4 which is a diode, part number MBR390, manufactured by Motorola; VR1 which is a diode, part number 1N759A, manufactured by Motorola; R9 which is a 10 Ohm resistor; R10 which is a 100 Ohm resistor; R6 which is a 470 Ohm resistor; R7 which is a 1K Ohm resistor; R8 which is a 2K Ohm resistor; R1 which is a 2.7K Ohm resistor; R11 which is a 4.7K Ohm resistor; R2, R3, R4, R5, and R12 which are each 10.0K Ohm resistors; C3, C5, and C6 which are each 1000 pF capacitors; C2, C4, and C7 which are each 0.1 uF capacitors; C1 and C8 which are each 330 uF capacitors, rated at 25 v; and T1 which is a transformer having a turns ratio of 1:1.

Referring to FIG. 7, the sensor node main program implemented by the microcontroller U3 of the sensor node **200** (see FIG. 3) will now be described.

After a reset of the microcontroller U3 by an external signal in step **305**, the sensor node main program ensures in program step **310** that the values stored in the non-volatile memory of the EEPROM U1 are valid. Invalid indicates a system failure or other error in the microcontroller U3. If the stored values are invalid, the sensor node main program resets the values to predetermined default values in program step **315**, and then continues by updating the DC/DC converter status in program step **320**. If the stored values are valid, the sensor node main program simply updates the DC/DC converter status in program step **320** by obtaining the DC/DC converter status from one of the microcontroller U3 registers. The DC/DC converter status will be either on or off. The microcontroller U3 will then turn the DC/DC converter **210** (illustrated in FIG. 5) on or off accordingly by means of the signal CHARGE_OFF.

The sensor node main program then determines whether the current measured values for the rechargeable battery operating temperature and terminal voltage that it has read on the A/D converters are within acceptable predetermined limits in program step **330**. If the then current measured values for temperature and voltage are within acceptable predetermined limits, it clears all warning flags in program step **335** and returns to the loop of continuing to update the DC/DC converter **210**, looking to see whether the measured values are within predetermined acceptable limits. If at any point the A/D values have gone beyond the predetermined acceptable limits, a determination is made of which type of warning flag to set.

The corresponding warning flag is set whenever: (1) the operating temperature of the rechargeable battery **50** exceeds the upper acceptable limit T_{max}; (2) the operating temperature of the rechargeable battery **50** is below the lower acceptable limit T_{min}; (3) the temperature compensated terminal voltage of the rechargeable battery **50** is greater than an upper limit V_{clamp}; and/or (4) the temperature compensated terminal voltage of the rechargeable battery **50** is less than a lower limit V_{min}.

The main program sets the appropriate warning flag depending on what condition has occurred in program steps **345**, **350**, **360**, **365**, **375**, **380**, **390**, and **395**. The sensor node main program then goes back and updates the DC/DC converter status again in program step **320** and reenters the primary program loop.

The temperature compensated terminal voltage of the rechargeable battery **50** is calculated in a well known manner by the microcontroller U3. In a preferred embodiment, the temperature compensated battery terminal voltage is referenced to a temperature of about 25° C.

Referring to FIG. 8, the sensor node one second interrupt implemented by the microcontroller U3 of the sensor node **200** (see FIG. 3) will now be described.

The sensor node one second interrupt first updates the current A/D readings by taking another reading of the operating temperature and the terminal voltage of the rechargeable battery **50** and updating the register in program step **510**.

The sensor node one second interrupt program then checks for the presence of warning flags in program step **515**. If there are no warning flags, the microcontroller U3 returns from the interrupt to the sensor node main program in program step **560**. If there is a warning flag, the microcontroller U3 increments a counter which counts how many seconds that particular warning flag has been active.

A warning flag indicating that the operating temperature T of the rechargeable battery **50** exceeds a predetermined maximum operating temperature T_{max} results in incrementing a high temperature second counter in program steps **520** and **525**. A warning flag indicating that the operating temperature T of the rechargeable battery **50** is less than a predetermined minimum operating temperature T_{min} results in incrementing a low temperature second counter in program steps **530** and **535**. A warning flag indicating that the temperature corrected terminal voltage V(T) of the rechargeable battery **50** exceeds a predetermined clamping voltage V_{clamp} results in incrementing a high voltage second counter in program steps **540** and **545**. A warning flag indicating that the temperature corrected terminal voltage V(T) of the rechargeable battery **50** is less than a predetermined minimum voltage V_{min} results in incrementing a low voltage second counter in program steps **550** and **555**.

The warning flag second counts are stored in the non-volatile memory of the EEPROM U1 (see FIG. 3). The warning flag second count values provide a lifetime register of the history of the particular rechargeable battery **50**.

The sensor node main program, once a second, pauses and runs the sensor node one second interrupt program. When the sensor node one second interrupt program is completed, the sensor node main program continues execution at the interrupted program step.

Referring to FIGS. 9*a* and 9*b*, the battery management system main program implemented by the CPU **20** will now be described.

After an initial reset of the CPU **20** in program step **565**, the CPU **20** checks that all of the battery nodes **60** are working in program step **570**.

If all of the battery nodes **60** are not working, then the CPU **20** configures the pack of battery modules **30** in program step **575**. To configure the pack in step **575**, the CPU **20** assigns addresses to and checks the working condition of the battery nodes **60**. The detailed steps in configuring the battery nodes **60** is described in detail in the discussion of the serial communication and node serialization protocol of the battery management system **10**.

If all of the battery nodes **60** are serialized and are working properly, the CPU **20** checks the overall system status in program step **580** and determines whether the system **10** is charging, discharging, or idle.

If the system **10** is discharging, the CPU **20** queries all of the sensor nodes **200** for battery operating temperatures in

program step **595**. The CPU **20** then sets appropriate warning flags in program step **597**, and saves the lowest rechargeable battery operating temperature reading as the actual temperature of the pack of rechargeable batteries **50** in program step **600**. In this manner, the CPU **20** is always conservative in determining the state of charge of the rechargeable batteries **50**.

If the battery management system **10** is idle, all of the sensor nodes **200** are queried periodically for rechargeable battery terminal voltage and operating temperature in program step **615**. If a rechargeable battery terminal voltage drops below a predetermined set point or the rechargeable battery operating temperature drops below a predetermined set point at a "full and ready" condition, then the DC/DC converter **210** for that particular rechargeable battery **50** is turned on by the CPU **20** in program step **620**. This maintains the rechargeable batteries **50** in a battery pack at a relatively constant moderate temperature, so if one drops below a predetermined setpoint that one rechargeable battery **50** receives an overcharge so as to warm the rechargeable battery **50**. This further maintains the rechargeable batteries **50** in a battery pack at approximately the same optimum terminal voltage in a "full and ready" condition.

In a preferred embodiment, the predetermined setpoint for the battery operating temperature at a "full and ready" condition is equal to the average operating temperature for the plurality of rechargeable batteries **50** within the battery pack minus a predetermined operating temperature differential. In a preferred embodiment, the predetermined operating temperature differential will range from about 2° to 10° C.

In a preferred embodiment, the predetermined setpoint for the battery terminal voltage at a "full and ready" condition is a predetermined acceptable lower terminal voltage at a "full and ready" condition. The CPU **20** activates the DC/DC converter **210** for a rechargeable battery **50** whose terminal voltage falls below the predetermined acceptable lower terminal voltage at a "full and ready" condition, continues monitoring the rechargeable battery terminal voltage, and turns the DC/DC converter **210** off once the rechargeable battery terminal voltage has reached an acceptable upper terminal voltage at a "full and ready" condition. In an exemplary embodiment, for typical rechargeable lead-acid batteries, the lower and upper acceptable voltages at a "full and ready" condition are approximately 12.6 volts and 14.25 volts respectively.

The CPU **20** next checks the warning flags. If there is a warning flag, a determination of which warning flag has been set is made in program step **605**. There are five possibilities: 1) low battery voltage, 2) high battery voltage, 3) low battery operating temperature, 4) high battery operating temperature, or 5) battery full.

The first possibility, low voltage warning flag, which would typically occur while the system **10** is discharging, indicates that one of the rechargeable batteries **50** has exhausted its supply of energy and has dropped out of the pack. Such a low voltage flag will cause the CPU **20** to reset the state of charge to 0% for that rechargeable battery **50** in program step **630**. The CPU **20** stores the event in a log in program step **635** so that there is a history of this event. The CPU **20** also displays a warning on the operator display **140** in program step **640**, and returns in program step **645** to check the system status in program step **580**.

The second possibility, high voltage warning flag, which would typically occur while the system **10** is charging, will cause the CPU **20** to determine whether it is the first such high voltage warning flag that has occurred during this charge in program **655**. If the high voltage warning flag set is not the first, then the CPU **20** determines whether the bulk charging current is disconnected from the rechargeable batteries **50** by operation of the switch **90** in program step **660**. If the bulk charging current is not disconnected from the batteries **50**, the CPU **20** determines whether the bulk charger **80** has been turned down to its lowest control setting in program step **665**, where the control setting for the bulk charger **80** determines the level of charging current provided. If the bulk charger **80** has not been turned down to its lowest setting, then the CPU **20** adjusts the bulk charger **80** control setting downward in program step **670**. The CPU **20** will then turn off the DC/DC converter **210** for the battery module **30** that generated the high voltage warning flag in program step **675**. And finally, the CPU **20** will return in program step **680** to check the system status in program step **580**. In a preferred embodiment, the bulk charger **80** control setting is adjusted downward by approximately one half when a high voltage warning flag is detected thereby reducing the bulk charging current by approximately one half.

If the high voltage warning flag is the first high voltage warning flag set during the charge, the CPU **20** turns on all of the DC/DC converters **210** in program step **685**, adjusts the bulk charger **80** control setting downward in program step **670**, turns off the ISC/DC converter **210** for the battery module **30** that generated the high voltage warning flag in program step **675**, and returns in program step **680** to check the system status in program step **580**. When subsequent high voltage warning flags are generated while the bulk charging current is disconnected from the batteries **50**, a gassing flag is set for the battery **50** whose battery module **30** generated the high voltage warning flag warning flag in program step **687**.

If the bulk charger **80** is providing a bulk charging current to the batteries **50** at the lowest control setting when a high voltage warning flag is detected, then the bulk charging current is disconnected from the batteries **50** by operation of the switch **90** in program step **690** and every DC/DC converter **210** is turned on in program step **695**.

The third possibility is a low battery operating temperature. If a low temperature warning flag is set, the bulk charging current is disconnected from the batteries **50** by operation of the switch **90** and all DC/DC converters **210** are turned off in program step **705**. The event is stored in the log in program step **710** and a warning is then displayed to the operator on the display **140** in program step **715**.

The fourth possibility is a high battery operating temperature. If a high temperature warning flag is set, then the bulk charging current is disconnected from the batteries **50** by operation of the switch **90** in program step **730**. The DC/DC converter **210** is turned off for the battery module **30** that generated the high temperature warning flag in program step **735** and the event is stored in the log in program step **740**. A warning is then displayed to the operator on the display **140** in program step **745**.

The fifth possibility is a "full" battery. If a rechargeable battery **50** is "full", the CPU **20** disconnects the bulk charging current from the batteries **50** by operation of the switch **90** in program step **760**. The CPU **20** then rams off the DC/DC converter **210** for the "full" battery **50** in program step **765**, and stores the event in the log in program step **770**.

The lowest control setting for the bulk charger **80** will determine a minimum bulk charging current level. In a preferred embodiment, the minimum bulk charging current level will be approximately equal to 1 to 2 percent,of the 3-hour discharge capacity for the rechargeable batteries **50**.

Referring to FIG. **10** the battery management system one second interrupt program implemented by the CPU **20** will be described.

The battery management system one second interrupt determines the state of charge of the rechargeable batteries **50**. Every second the battery management system one second interrupt is called by the battery management system main program.

In program step **780**, the battery management system one second interrupt takes the current reading for charging current and temperature and looks up the amp-hour temperature compensated correction factor stored in memory.

The battery management system one second interrupt program multiplies the charging current by the correction factor to yield a corrected current value. This value is added to a state of charge register in program steps **785** and **790**. A negative corrected current value indicates that the state of charge has become smaller, while a positive corrected current value indicates that the state of charge has become larger. Positive currents are charging currents, and negative currents are discharging currents. Thus, the calculated corrected charging current values are in amp-seconds. The battery management system one second interrupt program is called each second and the current is measured in amps.

The battery management system one second interrupt program determines whether the charge flag is set (i.e. whether the system **10** is charging or not) in program step **795**.

If the system is not charging, and the state of charge for a battery **50** is less than about 5%, the CPU **20** sends a low battery warning flag for that battery **50** to the operator by means of the display **140** in program steps **800** and **805**. The CPU **20** determines if the state of charge for a battery **50** is approximately zero % in program step **810**. If the state of charge for a battery **50** is approximately zero %, then the CPU. **20** shuts down the entire system in program step **815**, if the state of charge for a battery **50** is greater than about 5% in program step **800**, the CPU **20** returns from the battery management system one second interrupt program to the battery management system main program without a low battery warning flag being set for that battery **50**. If the state of charge is greater than approximately zero % for a battery **50** in program step **810**, the CPU **20** returns from the battery management system one second interrupt to the battery management system main program with a low battery warning flag set for that battery **50**, but without shutting down the system.

If the charge flag is set, indicating that the rechargeable batteries **50** are being charged, then the battery management system one second interrupt program goes through a different set of program steps. The time counter for battery modules with the gassing flag set are incremented in program step **820**. The CPU **20** calculates the dv/dt for the batteries **50** in program step **825**. The function dv/dt is the magnitude of the rate of change of the terminal voltage for the rechargeable batteries **50**.

The battery full flag is set in program step **830** for batteries **50** with an overflow condition or dv/dt approximately equal to zero. An overflow condition exists where the predetermined time limit for gassing has been exceeded for a battery **50**. The time limit for gassing typically varies as a function of the particular battery type. In a preferred embodiment, a dv/dt in the range of about 0 mV/minute to 50 mV/minute will indicate a full battery **50**.

If all of the batteries **50** are full, the charge complete flag is set in program step **835**.

If the state of charge is greater than about 93%, the CPU **20** asks whether the charge has been completed in program steps **840** and **845**. If the charge has been completed, the CPU **20** sets the state of charge to 100% and returns to the battery management system main program in program steps **850** and **860**. If the charge has not been completed, the CPU **20** maintains the state of charge at 93% and does not allow the state of charge to go over 93% in program steps **845** and **855**. The state of charge is maintained at 93% because there is an inherent uncertainty occurring between a charge of 93% and 100% for rechargeable batteries. It is well known in the art that this uncertainty makes it difficult to determine the state of charge for a battery between about 93% and 100%.

The rechargeable battery operating temperature typically ranges from about −30° C. up to 50° C. This range of values encompasses the operating range of values for typical lead-acid storage batteries.

The battery capacity algorithm for the battery management system one second interrupt uses a modified amp-hour counter which includes temperature and discharge rate compensation. The compensation accounts for battery inefficiencies which may occur when the temperature and discharge rate values exceed certain nominal values. In general, battery capacity decreases with low temperatures and high discharge rates. Conversely, battery capacity increases with high temperatures and low discharge rates. Accordingly, during a charging process, the capacity gage is held at about 93% until the battery management system has fully completed a charge cycle to allow for uncertainties in the state of charge between 93% and 100%. The amp-hour temperature correction factor is determined by a "characterization" of the battery **50** in a known manner.

In an exemplary embodiment, for a rechargeable lead-acid battery, the amp-hour temperature correction factors are indicated in Table 1:

TABLE 1

Operating Temperature °C.	−30	−20	−10	0	10	20	30	40
Charging Currents	1.00	1.00	1.00	1.00	1.00	1.00	1.00	1.00
Discharging Currents								
C/3	1.82	1.61	1.52	1.32	1.11	1.05	1.00	1.01
C/2	1.91	1.70	1.59	1.38	1.17	1.11	1.05	1.06
C	2.28	2.03	1.90	1.65	1.40	1.32	1.26	1.27
2C	2.69	2.39	2.24	1.95	1.64	1.56	1.48	1.49
3C	2.93	2.60	2.44	2.12	1.79	1.70	1.61	1.63
4C	3.13	2.78	2.61	2.27	1.91	1.81	1.72	1.74
5C	3.28	2.91	2.73	2.37	2.00	1.90	1.80	1.82

In Table 1, C indicates the three hour capacity of the battery in amp-hours and charging current indicates any current going back into the battery **50**. For any charging current, the amp-hour correction factor will always equal 1.00. For discharging currents the amp-hour correction factor is determined in Table 1 by calculating the ratio of C to the discharging current level. For example, in an exemplary embodiment, for any charging current, at any given operating temperature, the amp-hour correction will be equal to 1.00. In another exemplary embodiment, for a discharging current of 45 amps, with C equal to 90 amp-hours, the discharging current in Table 1 will be equal to C/2 since the discharging current is one half of C. In such an exemplary embodiment, for an operating temperature of −10° C., the amp-hour correction factor will equal 1.59. For intermediate values of discharging currents and operating temperatures, the amp-hour correction factor is calculated

by interpolating between the correction factors obtained by the initial "characterization" of the battery in a well known manner.

Referring to FIGS. 1, 2, 4, and 11, the serial communication and node serialization for the battery management system 10 will now be described.

Any number of industry standard serial communication protocols may be implemented in the system 10 to permit communication between the CPU 20 and the battery nodes 60 such as, for example, a Controller Area Network. In a preferred embodiment, the communication interface between the CPU 20 and the battery nodes 60 utilizes the industry standard RS-485 communications protocol. The communication interface is configured with the capacity for up to 128 battery nodes. The serial data bus 40 may be implemented as uninterrupted twisted pairs of conductors from a node at the CPU 20 to each of the battery nodes 60. The serial data bus 40 daisy-chains from the CPU node to each of the battery nodes 60 with no other connections as illustrated in FIG. 11. In a preferred embodiment, the serial data bus 40 includes two wires for the signals 485H and 485L (illustrated in FIG. 4).

FIG. 11 illustrates the signal port connection 41 to signal ports S1 and S2 located at each of the battery nodes 60 and at the CPU 20. The signal ports S1 and S2 at the battery nodes 60 provide the signals SIX and S2X in the line driver 205 (as illustrated in FIG. 4). As illustrated in FIGS. 1, 2, and 11, the S1 and S2 signal ports of the battery nodes 60 are connected in series with the S1 signal port, of one battery node 60 connected to the S2 signal port of the following battery node 60. The S1 signal port at the CPU 20 is connected to the S2 signal port of a first one of the battery nodes 60 and the S2 signal port at the CPU is connected to the S1 signal port of a last one of the battery nodes 60.

In a preferred embodiment, the battery management system 10 communicates with an inquiry/response sequence. The CPU 20 node initiates every message exchange by sending a message addressed to a specific battery node 60 and that battery node 60 then responds to the CPU node. The CPU node also may broadcast messages to all battery nodes 60 simultaneously. When more than one battery node 60 responds to a broadcast message, the CPU node will encounter a communication error and the CPU node will employ signaling in addition to sending broadcast messages to identify the battery nodes 60 involved in the communications exchange. Since the serial data bus 40 is a half-duplex communication path, only one node (i.e. CPU 20 and battery nodes 60) transmits on the serial data bus 40 at any time. When one node is transmitting, all other nodes must have their transmit drivers tri-stated (i.e., turned off).

The nodes not transmitting, receive the data being transmitted. These nodes recognize messages addressed to them and messages broadcast to all nodes. Each time a node completes transmission on the serial data bus 40 it tri-states (i.e. turns off) its transmit drivers.

In a preferred embodiment, broadcast messages in the battery management system 10 conform to the following format:

Byte 1	Byte 2	Byte 3	Byte 4	{Byte}	{Byte}	{Byte}	Last Byte
To-node	From-node	Length	Msg-ID	{Param-1}	{Param-2}	{Param-3}	V.R.C.

Messages are addressed to specific nodes (Byte #1) by the sending node (Byte #2) and specify the length (Byte #3) of the remainder of the message (Message ID and Parameter Data). The last Byte of the message is a VRC byte that is calculated for the preceding bytes in the message. VRC refers to the,industry standard term Vertical Redundancy Check byte which is generated upon transmission, transmitted with the message, generated upon reception, and checked with the transmitted version to verify that the message received is the same as the message sent.

The VRC byte is generated/verified by the following procedure:

```
SET VRC=0
FOR (each message byte)
   XOR message byte to VRC
   Rotate Left (VRC) 1 bit
   advance to next message byte
END FOR
```

In a preferred embodiment, the RS-485 messages are transmitted using the following parameters:

Baud Rate=9600
Start Bits=1
Data Bits=8
Parity bit=Odd
Stop Bits=1

In a preferred embodiment, message timing is implemented using the following parameters:

Maximum Time allowed to Disable (tri-state) Transmit drivers after completion of stop bit=1 Bit Time.

Minimum Wait Time for Reply node before sending Start Bit (after stop bit is received)=2 Bit times.

Maximum interval between Message Bytes=2 Character Times.

Maximum response timeout value (end of stop bit to response start bit)=10 milliseconds.

In an exemplary embodiment, node addresses are byte values of 1 thur 255. In a preferred embodiment, the byte value of zero is used to indicate a broadcast address rather than a specific node ID. For a typical application, the range of byte values that are assigned to battery nodes 60 as their node IDs are the values of 1 thru 127. The CPU 20 node uses the byte value of 128 as its node ID. In a preferred embodiment, node IDs are assigned starting with a byte value of 1 as the battery node 60 with its signal port 1 (S1) connected to signal port 2 (S2) of the CPU 20 node. Node ID 2 is assigned to the battery node 60 with its signal port 1 (S1) connected to signal port 2 (S2) of the battery node 60 with node ID 1, etc. The last battery node 60 has its signal port 2 (S2) connected to signal port 1 (S1) of the CPU 20 node (node ID 128). The CPU 20 node may assign a new node ID to a battery node 60 while it is going through a configuring process to establish sequential node IDs among the battery nodes 60 and in the order of their connection by the signal port connecting lines. This process may assign node ID values between 129 and 255 as a temporary measure to free up the previously existing node ID value for use by a different node.

In a preferred embodiment, the serial communication within the battery management system 10 includes broadcast address messages, node address messages, and node reply messages (note that CPU refers to the node at the CPU 20).

Broadcast address messages for the battery management system **10** include:

ID	NAME	FROM	TO	DESCRIPTION
01 h	SETNODE-ID	CPU	all battery nodes	Assign new node ID if (S1 & S2 are both Inactive)
09 h	SIGNAL-0	CPU	all battery nodes	De-activate and Stop Signal monitoring on (S1 and S2)
0A h	SIGNAL-1	CPU	all battery nodes	De-activate Signal Port 1 (S1)
0B h	SIGNAL-2	CPU	all battery nodes	De-activate Signal Port 2 (S2)
0C h	SIGNAL-3	CPU	all battery nodes	Activate Signal Port 1 (S1)
0D h	SIGNAL-4	CPU	all battery nodes	Activate Signal Port 2 (S2)
0E h	SIGNAL-5	CPU	all battery nodes	Activate signal Port 1 (S1) if Signal Port 2 (S2) is active
0F h	SIGNAL-6	CPU	all battery nodes	Activate signal Port 2 (S2) if Signal Port 1 (S1) is active
10 h	CONFIG-1	CPU	all battery nodes	Signal (S2) if Battery Serial Number VRC Matches
11 h	CONFIG-2	CPU	all battery nodes	Signal (S2) if Battery Serial Number Checksum Matches
12 h	CONFIG-3	CPU	all battery nodes	Signal (S2) if Battery Serial Number VRC & Checksum match
13 h	QUERY-1	CPU	all battery nodes	ACK if Neitner Signal Port (S1 nor S2) is active
14 h	QUERY-2	CPU	all battery nodes	ACK if Either Signal Port (S1 or S2) is active
15 h	QUERY-3	CPU	all battery nodes	ACK if Both Signal Ports (S1 and S2) are active

Node address messages for the battery management system **10** include:

ID	NAME	FROM	TO	DESCRIPTION
00 h	REPEAT-LAST	CPU	battery node	Repeat your Reply
01 h	SETNODE-ID	CPU	all battery nodes	Assign new node ID if (S1 & S2 are both Inactive)
02 h	SETNODE-ID	CPU	battery node	Assign and respond to new node ID
03 h	ARE-U-THERE	CPU	battery node	Send ACK if the node recognizes this message
04 h	DC-DC-CNTRL	CPU	battery node	Turn (ON/OFF) DC-DC Converter
05 h	GET-A-D	CPU	battery node	Measure Voltage and temp with A/D and return Values
06 h	GET-EEPROM	CPU	battery node	Read 2 bytes of EEPROM data and return Values
07 h	PUT-EEBYTE	CPU	battery node	Write 1 byte of EEPROM data at specified address
08 h	PUT-EEWORD	CPU	battery node	Write 2 bytes of EEPROM data at specified address
09 h	SIGNAL-0	CPU	battery node	De-activate and Stop Signal monitoring on (S1 and S2)
0A h	SIGNAL-1	CPU	battery node	De-activate Signal Port 1 (S1)
0B h	SIGNAL-2	CPU	battery node	De-activate Signal Port 2 (S2)
0C h	SIGNAL-3	CPU	battery node	Activate Signal Port 1 (S1)
0D h	SIGNAL-4	CPU	battery node	Activate Signal Port 2 (S2)
0E h	SIGNAL-5	CPU	battery node	Activate signal Port 1 (S1) if Signal Port 2 (S2) is active
0F h	SIGNAL-6	CPU	battery node	Activate signal Port 2 (S2) if Signal Port 1 (S1) is active
10 h	CONFIG-1	CPU	battery node	Signal if Battery Serial Number VRC Matches
11 h	CONFIG-2	CPU	battery node	Signal if Battery Serial Number Checksum Matches
12 h	CONFIG-3	CPU	battery node	Signal if Battery Serial Number VRC & Checksum match
13 h	QUERY-1	CPU	battery node	Respond if Neither Signal Port (S1 and S2) is active
14 h	QUERY-2	CPU	battery node	Respond if Both Signal Ports (S1 and S2) are active
15 h	QUERY-3	CPU	battery node	Respond if Either Signal Port (S1 or S2) is active

Node reply messages for the battery management system **10** include:

ID	NAME	FROM	TO	DESCRIPTION
00 h	ACK	battery node	CPU	Acknowledge to message received
01 h	NACK	battery node	CPU	Acknowledge to message received
02 h	AD-REPORT	battery node	CPU	Report Temperature and Voltage A/D measurements
03 h	EEPROM-DAT	battery node	CPU	Report 2 bytes at EEPROM address requested
04 h	SIGNAL-STAT	battery node	CPU	Status of Signal Ports 1 and 2 (S1 and S2)

A number of different message formats may be used to provide communications between and serialization of the CPU **20** and battery nodes **60** of the battery management system **10**. In a preferred embodiment, the following message formats are utilized in the serial communication and node serialization for the battery management system **10**:

SIGNAL-0 Message to specific battery node 60 or to all battery nodes to cancel all action initiated by SIGNAL-3 thru SIGNAL-6 and/or CONFIG-1 thru CONFIG-3.

Byte 1	Byte 2	Byte 3	Byte 4	Byte 5
To Node ID	From ID	Length	Message ID	VRC
	80 h	1	09 h	

SIGNAL-1 Message to specific battery node 60 or to all battery nodes to de-activate signal port 1 (S1).

Byte 1	Byte 2	Byte 3	Byte 4	Byte 5
To Node ID	From ID	Length	Message ID	VRC
	80 h	1	0A h	

SIGNAL-2 Message to specific battery node 60 or to all battery nodes to de-activate signal port 2 (S2).

Byte 1	Byte 2	Byte 3	Byte 4	Byte 5
To Node ID	From ID	Length	Message ID	VRC
	80 h	1	0B h	

SIGNAL-3 Message to specific battery node 60 or to all battery nodes to activate signal port 1 (S1).

Byte 1	Byte 2	Byte 3	Byte 4	Byte 5
To Node ID	From ID	Length	Message ID	VRC
	80 h	1	0C h	

SIGNAL-4 Message to specific battery node 60 or to all battery nodes to activate signal port 2 (S2).

Byte 1	Byte 2	Byte 3	Byte 4	Byte 5
To Node ID	From ID	Length	Message ID	VRC
	80 h	1	0D h	

SIGNAL-5 Message to specific battery node 60 or to all battery nodes to repeat signal port 2 (S2) on signal port 1 (S1)

Byte 1	Byte 2	Byte 3	Byte 4	Byte 5
To Node ID	From ID	Length	Message ID	VRC
	80 h	1	0E h	

SIGNAL-6 Message to specific battery node 60 or to all battery nodes to repeat signal port 1 (S1) on signal port 2 (S2).

Byte 1	Byte 2	Byte 3	Byte 4	Byte 5
To Node ID	From ID	Length	Message ID	VRC
	80 h	1	0F h	

CONFIG-1 Message to specific battery node 60 or to all battery nodes to assert signal port 2 if the VRC for the node's battery serial number matches Byte 5 of the message.

Byte 1	Byte 2	Byte 3	Byte 4	Byte 5	Byte 6
To Node ID	From ID	Length	Message ID	Serial Num.	VRC
	80 h	2	10 h	VRC	

CONFIG-2 Message to specific battery node 60 or to all battery nodes to assert signal port 2 if the checksum for the node's battery serial number matches Byte 5 of the message.

Byte 1	Byte 2	Byte 3	Byte 4	Byte 5	Byte 6
To Node ID	From ID	Length	Message ID	Serial Num.	VRC
	80 h	2	11 h	Checksum	

CONFIG-3 Message to specific battery node 60 or to all battery nodes to assert signal port 2 if the VRC and the checksum for the node's battery serial number matches Bytes 5 and 6 of the message.

Byte 1	Byte 2	Byte 3	Byte 4	Byte 5	Byte 6	Byte 7
To Node ID	From ID	Length	Message ID	Serial Num.	Serial Num.	VRC
	80 h	3	12 h	VRC	Checksum	

QUERY-1 Message to specific battery node 60 or to all battery nodes to respond by sending message SIGNAL-STAT if neither signal port (S1 and S2) input is active.

Byte 1	Byte 2	Byte 3	Byte 4	Byte 5

-continued

To Node ID	From ID	Length	Message ID	VRC
	80 h	1	13 h	

QUERY-2 Message to specific battery node 60 or to all battery nodes to respond by sending message SIGNAL-STAT if both signal port (S1 and S2) inputs are active.

Byte 1	Byte 2	Byte 3	Byte 4	Byte 5

To Node ID	From ID	Length	Message ID	VRC
	80 h	1	14 h	

QUERY-3 Message to specific battery node 60 or to all battery nodes to respond with the message SIGNAL-STAT if either signal port (S1 and S2) input is asserted.

Byte 1	Byte 2	Byte 3	Byte 4	Byte 5

To Node ID	From ID	Length	Message ID	VRC
	80 h	1	15 h	

SETNODE-ID Message to specific battery node 60 to hereafter respond only to the new node ID. The addressed node is expected to send an ACK reply using the former node ID. When this message is broadcast, the node(s) having neither S1 nor S2 active take this action, and all nodes with either S1 or S2 or both S1 and S2 active ignore it.

Byte 1	Byte 2	Byte 3	Byte 4	Byte 5	Byte 6

To Node ID	From ID	Length	Message ID	New	VRC
	80 h	2	01 h/02 h	Node ID	

ARE-U-THERE Message to specific battery node 60 to send an ACK reply if this message is recognized.

Byte 1	Byte 2	Byte 3	Byte 4	Byte 5

To Node ID	From ID	Length	Message ID	VRC
	80 h	1	03 h	

DC-DC-CNTRL Message to specific battery node 60 to turn (ON/OFF) its DC-DC converter 210 and respond with either ACK or NACK as appropriate.

Byte 1	Byte 2	Byte 3	Byte 4	Byte 5	Byte 6

To Node ID	From ID	Length	Message ID	0 = OFF	VRC
	80 h	2	04 h	1 = ON	

GET-A-D Message to specific battery node 60 to measure temperature and voltage of its battery and to then reply with an AD-REPORT or a NACK message.

Byte 1	Byte 2	Byte 3	Byte 4	Byte 5

To Node ID	From ID	Length	Message ID	VRC
	80 h	1	05 h	

AD-REPORT Response message from a battery node 60 to the CPU 20 node after a GET-A-D message. New A/D measurements for both temperature and voltage are made before responding.

Byte 1	Byte 2	Byte 3	Byte 4	Byte 5	Byte 6	Byte 7

To CPU	From Node ID	Length	Message ID	Battery	Battery	VRC
80 h		3	02 h	Temp (A/D)	Volts (A/D)	

GET-EEPROM Message to specific battery node 60 or read the word of EEPROM U1 specified by Byte 5 and Reply with an EEPROM-DAT message.

Byte 1	Byte 2	Byte 3	Byte 4	Byte 5	Byte 6

To Node ID	From ID	Length	Message ID	EEPROM	VRC
	80 h	2	06 h	Address	

EEPROM-DAT Response message from a battery node 60 to the CPU 20 node after a GET-EEPROM message. EEPROM U1 Address is that for a word (even value)

Byte 1	Byte 2	Byte 3	Byte 4	Byte 5	Byte 6	Byte 7	Byte 8

To CPU	From	Length	Message ID	EEPROM	Low Adr.	High Adr.	VRC
80 h	Node ID	4	03 h	Address	Data Byte	Data Byte	

PUT-EEBYTE Message to specific battery node 20 to write the Byte of EEPROM U1 specified by Bytes 5 and 6 and to Reply with an ACK or NACK message.

Byte 1	Byte 2	Byte 3	Byte 4	Byte 5	Byte 6	Byte 7

-continued

To Node ID	From ID	Length	Message ID	EEPROM	Data	VRC
	80 h	3	07 h	Address	Byte	

PUT-EEWORD Message to specific battery node 60 to write the word of EEPROM U1 specified by Bytes 5, 6, and 7 and to reply with an ACK or NACK message.

Byte 1	Byte 2	Byte 3	Byte 4	Byte 5	Byte 6	Byte 7	Byte 8
To Node ID	From ID	Length	Message ID	EEPROM	Low Adr.	High Adr.	VRC
	80 h	4	08 h	Address	Data Byte	Data Byte	

REPEAT-LAST Message to specific battery node 60 to repeat the last former response message.

Byte 1	Byte 2	Byte 3	Byte 4	Byte 5
To Node ID	From ID	Length	Message ID	VRC
	80 h	1	00 h	

ACK Response message from a battery node 60 to the CPU 20 node that the last request action was completed or that no error has occurred.

Byte 1	Byte 2	Byte 3	Byte 4	Byte 5
To CPU	From	Length	Message ID	VRC
80 h	Node ID	1	00 h	

NACK Response message from a battery node 60 to the CPU 20 node that the last request action was not completed or that an error has occurred.

Byte 1	Byte 2	Byte 3	Byte 4	Byte 5
To CPU	From	Length	Message ID	VRC
80 h	Node ID	1	01 h	

SIGNAL-STAT 0 Response Message from a battery node 60 to the CPU 20 node following a Query-1, Query-2, or a Query-3 message indicating the defined condition exists at this node.

Byte 1	Byte 2	Byte 3	Byte 4	Byte 5	Byte 6	Byte 7
To CPU	From	Length	Message ID	S1-in = x1	S2-in = x2	VRC
80 h	Node ID	3	04 h	S1-out = 1x	S2-Out = 2x	

Operation of the serial communications of the battery management system **10** depends upon the CPU **20** node having the ability to maintain an exchange of information with each of the battery nodes **60** continuously while the batteries **50** are electrically connected in series and while there is a connection of the serial data bus **40** to all of the battery nodes **60** and to the CPU **20** node. FIG. **11** illustrates the configuration that exists during this period. Any battery node **60** that has its serial data interface **40** open or shorted with respect to the serial data bus **40** will not be capable of having its charging or discharging periods monitored by the CPU **20**, hence that battery **50** will be vulnerable to over or under charge until the problem is corrected.

When the battery modules **30** with their respective battery nodes **60** are first assembled with the CPU **20** node, the node addresses of each battery node **60** must be established. The CPU **20** node has no way of knowing that node ID values may already exist in each of the battery nodes **60**. It is very likely that more than one of the node IDs within the battery pack are identical. It is also very likely that the node ID values are not in the preferred order that is depicted in FIG. **11**.

Assuming that every battery node **60** is connected to the serial data bus **40**, the CPU **20** node can communicate with every battery node **60** with broadcast messages that cause the battery nodes **60** to monitor and control their signal ports.

The node address configuring process may be implemented in a number of ways provided that all of the system nodes are completely identified each with a unique and preferably sequential identifier. In a preferred embodiment, the address configuring process begins with the CPU **20** node activating its signal port **2** (S2) and follows up by broadcasting a SIGNAL-**6** message to all of the battery nodes **60**. Referring to FIG. **11**, battery node-**1** will detect its signal port **1** (S1) active and will then activate its signal port **2** (S2). Battery node-**2** will do the same thing and so will each of the other Battery nodes **60** until the last battery node **60** in the series has activated its signal port **2** (S2) which will then be detectable by the CPU **20** node. The CPU **20** node can then be sure that none of the signal port connections between battery nodes **60** are open. It is still possible that a connection to signal port **1** of some battery Node **60** is shorted to signal port **2** of the same node, effectively bypassing that node. To eliminate this latter possibility, the CPU **20** node must de-activate its signal port **2** (S2) output and broadcast SIGNAL-**0**, QUERY-**2**, and SIGNAL-**6**. Every node whose signal port **1** becomes active will first check its signal port **2** to determine if it is active before the node activates its signal port **2**. If a node detects that both of its signal ports become active at the same time the node will send a SIGNAL-STAT message to so inform the CPU **20** node.

The CPU **20** node will de-assert its signal port **2** and broadcast SIGNAL-**0**, SIGNAL:**4**, and SET-NODE=01. This sequence will reach battery node-**1** in FIG. **11** and set its node. ID=1. The CPU **20** node will next send SIGNAL-**0** to Node-ID **1**, causing it to de-assert its signal port **2**. The node at the CPU **20** will assert its signal port **2** then broadcast SET-NODE =02. This last sequence will reach battery Node-**2** in FIG. **11** and set its Node ID=2. Continuing this process permits each successive battery node **60** to be assigned a node ID that is in agreement with FIG. **11**. Since this signaling process may also be done using signal port **1**

of the CPU node, it is possible to reach every battery node **60** by this method even if one of the wires between battery node signal ports is disconnected. The possibility of both signal ports on a battery node **60** being open can be circumvented by employing QUERY-1, QUERY-2, and QUERY-3 messages and/or CONFIG-1, CONFIG-2, and CONFIG-3 messages. The last three messages require that the CPU **20** node try up to 254 ID VRC and/or checksum values in order to reach the isolated battery node **60**.

The checksum, as is well known, is a byte which is generated by adding all of the bytes in a block, with no overflow, which truncates the result to one byte. This is used in addition to the VRC for verification purposes.

When all of the battery nodes **60** have been addressed and their node IDs set to be sequential, the CPU **20** node needs to obtain a current record of the EEPROM U1 data from each battery node **60** in order to keep it current and send PUT-EEBYTE or PUT-EEWORD messages when changes need to be written back into the EEPROM U1 of any battery node **60**.

As long as all connections are maintained and no battery node **60** fails, it will not be necessary to reconfigure the battery node IDs. If a connection comes loose, or a battery node **60** quits operating, then a configuration pass will be attempted again and a warning flag set and displayed to the operator.

During operation of the system **10**, the management and control of the plurality of battery modules **30** is performed in three basic phases.

During phase one, the CPU **20** preferably provides approximately 93% charge by means of the bulk charger **80**. The CPU **20** generates a bulk charger control signal **160** commanding the bulk charger **80** to provide full bulk charging current. For a typical bulk charger, the bulk charging current will range from about 1 to 50 amps.

Throughout phase one of the charging process, the battery modules **30** provide a plurality of rechargeable battery terminal voltage signals and rechargeable battery operating temperature signals representative of the corresponding rechargeable battery terminal voltage and rechargeable battery operating temperature to the CPU **20**. When the CPU **20** receives the first battery terminal voltage signal indicating that a rechargeable battery **50** has a terminal voltage greater than the predetermined clamping voltage V_{clamp}, the CPU **20** generates a bulk charger control signal **160** commanding the bulk charger **80** to reduce the bulk charging current, all of the DC/DC converters **210** for the rechargeable batteries **50** are activated, and then the DC/DC converter **210** for the rechargeable battery **50** having a terminal voltage exceeding the predetermined clamping voltage V_{clamp} is turned off. The DC/DC converters that remain on provide an average charging current of approximately 1 percent of the 3-hour discharge capacity of the rechargeable batteries **50**.

In a preferred embodiment the CPU **20** generates a bulk charger control signal **160** commanding the bulk charger **80** to reduce the bulk charging current to approximately one half of its previous value. The reduction in the bulk charging current by approximately one half provides a gradual decrease in the charging current. Other gradients may be utilized as well, such as, for example, exponential or equal stepwise decreases in bulk charging current. For typical rechargeable lead-acid batteries, the clamping voltage V_{clamp} will typically be around about 14 to 15 volts. In an exemplary embodiment, the clamping voltage V_{clamp} will be approximately 14.25 volts @80° F. This process of continuous detection of battery terminal voltage, reduction in bulk charging current, and provision of separate charging currents to the remaining rechargeable batteries **50** whose terminal voltages have not yet exceeded the clamping voltage V_{clamp} continues until the bulk charging current has reached a predetermined lower bulk charging current limit. At that point typically all of the DC/DC converters **210** will be turned off. In an exemplary embodiment, the predetermined lower bulk charging current limit is approximately 1 amp.

In a preferred embodiment, the predetermined lower bulk charging current limit is approximately equal to 1 to 2 percent of the 3-hour discharge rating of the batteries **50**. Thus, for example, if the each of the batteries **50** has a 3-hour discharge rating of 100 amp-hours then the lower bulk charging current limit ranges from approximately 1 to 2 amps. Once the predetermined lower bulk charging current limit has been reached, phase two of the charging process begins.

During phase two of the charging process, the plurality of battery modules **30** complete the charging process for the plurality of rechargeable batteries **50** on an individual basis by means of the DC/DC converters **210**. The CPU **20** first disconnects the bulk charger **80** from the plurality of battery modules **30** by generating a trim charge control signal **170** which places the control switch **90** in a position interrupting the flow of the bulk charging current to the batteries **50**. All of the DC/DC converters **210** are then turned on by means of the plurality of sensor nodes **200**, which are in turn controlled by the CPU **20** by means of the serial interface **40**. The DC/DC converters **210** provide a average charging current of approximately 1 percent of the 3-hour discharge rating of the battery **50**. In an exemplary embodiment, for batteries **50** having 3-hour discharge ratings of 100 amp-hours, the DC/DC converters **210** will each provide an average charging current of 1±0.25 amps to the rechargeable batteries **50**. Throughout phase two of the charging process, the battery modules **30** provide rechargeable battery voltage signals and rechargeable battery temperature signals representative of the corresponding battery terminal voltage and battery operating temperature to the CPU **20**. If the CPU **20** detects a rate of change of battery terminal voltage, dv/dt, below a predetermined lower dv/dt limit (which indicates a "full" battery") then the DC/DC converter **210** for that particular battery module **30** is turned off. The predetermined lower dv/dt limit indicating a fully charged condition for the rechargeable battery **50**. In a preferred embodiment, a dr/tit less than or equal to about 50 mV/minute indicates a "full" battery for typical lead-acid rechargeable batteries. If one or more of the rechargeable batteries **50** fail to reach full charge within a predetermined full charging time limit, an error flag is set within the CPU **20**, and all of the DC/DC converters **210** are turned off. Once all of the batteries **50** have become fully charged phase three of the charging process is entered.

During phase three of the charging process, the CPU **20** maintains the plurality of rechargeable batteries **50** at a "full and ready" condition. Throughout phase three of the charging process, the battery modules **30** provide rechargeable battery terminal voltage signals and rechargeable battery operating temperature signals representative of their corresponding rechargeable battery terminal voltages and rechargeable battery operating temperatures to the CPU **20**. If the CPU **20** detects a rechargeable battery **50** whose operating temperature is less than the average temperature of the plurality of rechargeable batteries **50** by a predetermined temperature differential, the CPU **20** activates the DC/DC converter **210** for that rechargeable battery **50** to supply charging current to the rechargeable battery **50**. The excess charging current supplied to that rechargeable battery **50**

heats the rechargeable battery **50** as recombination takes place within the cells of the rechargeable battery **50**. In this manner, the CPU **20** is able to even out temperatures among the plurality of rechargeable batteries **50** by providing individual warming of rechargeable batteries **50** through selective activation of the DC/DC converters **210**. In a preferred embodiment, the predetermined temperature differential ranges from about 2° C. to 10° C.

The CPU **20** further turns on the DC/DC converter **210** whenever the terminal voltage of a particular rechargeable battery **50** falls below a predetermined acceptable lower voltage in a "full and ready" condition. The CPU **20** continues monitoring and turns the DC/DC converter **210** off once the rechargeable battery terminal voltage has reached a predetermined acceptable upper voltage during a "full and ready" condition. In an exemplary embodiment, for typical lead-acid rechargeable batteries, the lower voltage and upper voltage are approximately 12.6 volts and 14.25 volts respectively (both temperature compensated).

Thus, during operation of the battery management system **10**, the CPU **20** handles the high level algorithmic functions, the operator interface, the vehicle interface, and the bulk charger control functions, while the sensor nodes **200** provide monitoring of the plurality of rechargeable batteries **50**. The serial interface **40** further enables the CPU **20** to communicate with the individual sensor nodes **200** located at the individual battery modules **30**. The sensor nodes **200** measure the voltage and temperature of are rechargeable batteries **50** to which they are connected, and also control the DC/DC converters **210** located at each of the battery modules **30**. The DC/DC converters **210** in turn provide 500 VDC isolation between the rechargeable battery voltage, and the 2 wire low voltage power bus **130** (9–16 V) which is common to each of the DC/DC converters **210** as well as the CPU **20**. The DC/DC converters **210** provide current to the individual rechargeable batteries **50** on command from the CPU **20** by means of the sensor nodes **200** and line drivers **205**.

The DC/DC converters **210** provide an output rms current of approximately 1 percent of the 3-hour discharge capacity of the rechargeable batteries **50** from the DC power supply **120**. In an exemplary embodiment, for batteries **50** having 3-hour discharge capacities of 100 amp-hours, the DC/DC converters **210** provide an output rms current of 1 amp ±250 mA to the rechargeable batteries **50** from a DC power supply of about 9–16 volts provided by the auxiliary power supply **120**. The DC/DC converters **210** further provide isolation between the rechargeable batteries **50** and the common power bus **130** of 500 VDC. The DC/DC converters **210** have an operating temperature range from about −40° C. to +80° C. The DC/DC converters **210** are controlled by means of a control line which has a logic level referenced to the common power bus **130**.

The sensor nodes **200** and line drivers **205** provide isolation between the rechargeable batteries **50** and the common power bus **130** of 500 VDC. Communication between the sensor nodes **200** and line drivers **205** and the CPU **20** are accomplished by means of serial communication that utilizes the industry standard RS-485 communications protocol.

Each sensor node **200** can operate autonomously without being connected to a DC/DC converter **210** or a line driver **205**. Each sensor node **200** includes temperature sensing, voltage sensing, and nonvolatile registers storing a number of counter values, as well as other operating parameters. Preferably, each sensor node **200** has a battery address so that when the battery modules **30** are placed together in a battery pack, each battery module **30** can be given a unique address so that it can be queried individually to access the warranty information resident in the nonvolatile registers related to battery voltage and operating temperature over the lifetime of its rechargeable battery **50**.

Each sensor node **200** has a serial I/O link, by means of the line driver **205**, which is optically isolated from the rechargeable battery **50**. The sensor node **200** has one digital control line which controls the operation of the DC/DC converter **210**, and two serial data signal lines. Each sensor node **200** also has the ability to integrate time spent above or below certain temperature corrected voltage levels so that the sensor node **200** can maintain a register which records how many minutes have been spent above the gassing voltage (gassing voltage refers to an upper temperature corrected voltage at which the plates of the rechargeable battery **50** begin to evolve gas). Preferably, the sensor node **200** allows the battery module **30** to store certain warranty information so that the contents of the sensor node registers may be interrogated through the serial I/O link to determine how the rechargeable battery **50** has been treated. For example, the sensor node **200** can determine how many times the rechargeable battery **50** was brought to too low a voltage, how many times the rechargeable battery **50** was brought to too high a voltage, how many times the rechargeable battery **50** was brought to too low an operating temperature, how many times the rechargeable battery **50** was brought to too high an operating temperature, and how much time it spent gassing.

The DC/DC converter **210** and line driver **205** permit the connection of a plurality of battery modules **30** in a battery pack by using a six wire bus (two wires for the serial interface **40**, two wires for the signal port interface **41**, and two wires for the power bus **130**). This thereby enables the CPU **20** to interrogate each battery module **30** in the battery pack separately. It also allows the CPU **20** to pass energy to any one of the rechargeable batteries **50**, by way of the DC/DC converters **210**, to finish off a charge.

In one preferred embodiment, the modular construction of the battery modules **30** permits a number of combinations of sensor node **200**, DC/DC converter **210**, and line driver **205**, thereby enabling a number of operational modes.

The battery module **30**, utilizing both the DC/DC converter **210** and the line driver **205**, permits the transmission of an average charging current of approximately 1 percent of the 3-hour discharge capacity of the rechargeable battery **50** from the power bus **130** to the rechargeable battery **50**. This feature enables the battery management system **10** to finish off a charge that is controlled by the sensor node **200**. The battery module **30** further provides about 500 volts of isolation between the common power bus **130**, the V bus positive and battery positive and provides about 500 volt DC isolation on the driver receiver. The battery module **30** also enables the sensor node registers to be queried at the factory. And the battery module **30** also enables real time monitoring, meaning that the CPU **20** can determine in real time what the state of the rechargeable batteries **50** are.

If the DC/DC converter **210** is left out of the battery module **30**, real time monitoring can still be performed. The real-time information can be obtained at any time from any sensor node **200** which is acting as a slave. The sensor node registers further can be queried at the factory, but with this configuration, the rechargeable batteries **50** cannot be equalized by passing energy back and forth through the DC/DC converters **210**. Instead, the rechargeable batteries **50** would have to be charged in series using the bulk charger **80**.

The battery modules **30** may also be operated with just the sensor node **200** in place in the battery module **30** for the purpose of recording warranty data.

An apparatus and method for management and control of battery power packs has been described which provides distributed control of the charging process of a plurality of rechargeable batteries thereby permitting precise and individualized charging of a plurality of rechargeable batteries. While a specific embodiment of the invention has been disclosed for use with lead-acid batteries, it will be recognized that principles and examples described herein are clearly applicable to other rechargeable battery systems.

While the invention is susceptible to various modifications and alternative forms, specific embodiments have been shown by way of example. However, it should be understood that the invention is not intended to be limited to the particular forms disclosed. Rather, the invention is intended to cover all modifications, equivalents and alternatives falling within the spirit and scope of the invention as defined by the claims.

What is claimed is:

1. A method for monitoring a rechargeable battery comprising:

monitoring a temperature of said rechargeable battery;

monitoring a voltage of said rechargeable battery;

incrementing a high temperature second counter when said monitored temperature exceeds a predetermined maximum temperature for a predetermined time interval;

incrementing a low temperature second counter when said monitored temperature is less than a predetermined minimum temperature for a predetermined time interval;

incrementing a high voltage second counter when said monitored voltage exceeds a predetermined clamping voltage for a predetermined time interval;

incrementing a low voltage second counter when said monitored voltage is less than a predetermined minimum voltage for a predetermined time interval; and

storing said high temperature second counter, said low temperature second counter, said high voltage second counter, and said low voltage second counter in a memory.

2. A method for monitoring a rechargeable battery comprising:

monitoring a temperature of said rechargeable battery;

monitoring a voltage of said rechargeable battery; and

generating a high temperature warning signal when said monitored temperature exceeds a predetermined maximum operating temperature;

generating a low temperature warning signal when said monitored temperature is less than a predetermined minimum temperature;

generating a high voltage warning signal when said monitored voltage exceeds a predetermined clamping voltage;

generating a low voltage warning signal when said monitored voltage is less than a predetermined minimum voltage;

incrementing a high temperature second counter when said monitored temperature exceeds said predetermined maximum temperature for a predetermined time interval;

incrementing a low temperature second counter when said monitored temperature is less than said predetermined minimum temperature for a predetermined time interval;

incrementing a high voltage second counter when said monitored voltage exceeds said predetermined clamping voltage for a predetermined time interval;

incrementing a low voltage second counter when said monitored voltage is less than a predetermined minimum voltage for a predetermined time interval; and

storing said high temperature second counter, said low temperature second counter, said high voltage second counter, and said low voltage second counter in a memory.

3. A method for monitoring a rechargeable battery, comprising:

monitoring at least one operating condition of said rechargeable battery;

for each operating condition of said battery, monitoring an elapsed time period during which said operating condition of said battery exceeds a predetermined value;

for each operating condition of said battery, monitoring another elapsed time period during which said operating condition of said battery is less than another predetermined value; and

for each operating condition of said battery, storing said elapsed time periods in a memory.

4. The method for monitoring a rechargeable battery of claim 3, further comprising:

for each operating condition of said battery, generating a warning signal when said elapsed time period exceeds a predetermined time period; and

for each operating condition of said battery, generating another warning signal when said another elapsed time period exceeds another predetermined time period.

* * * * *