US 20050278079A1

(19) United States

(12) Patent Application Publication

Maguire

(10) Pub. No.: US 2005/0278079 A1

(43) Pub. Date: Dec. 15, 2005

(54) APPARATUS AND METHOD FOR DISPLAYING GRAPHICAL INFORMATION RELATING TO VEHICLE OPERATION

(76) Inventor: **Joel M. Maguire**, Northville, MI (US)

Correspondence Address:
CHRISTOPHER DEVRIES
General Motors Corporation
Mail Code 482-C23-B21
P.O. Box 300
Detroit, MI 48265-3000 (US)

(21) Appl. No.: **10/866,920**

(22) Filed: **Jun. 14, 2004**

Publication Classification

(51) **Int. Cl.**[7] **G06F 17/00**

(52) **U.S. Cl.** **701/1**; 340/425.5

(57) **ABSTRACT**

A method and an apparatus are provided for displaying operational information of an automobile on a signal processing device within an interior cabin of the automobile. The apparatus comprises a first automobile control module configured to generate a first output signal corresponding to the operational information of the automobile and an interface circuit configured to couple the signal processing unit and the first automobile control module. The first interface circuit has a signal translating circuit that is configured to convert the first output signal for use by the signal processing device in displaying the operational information of the automobile. The apparatus also comprises a holder associated with the interface circuit and configured to removably attach the signal processing device to the interior cabin space of the automobile.

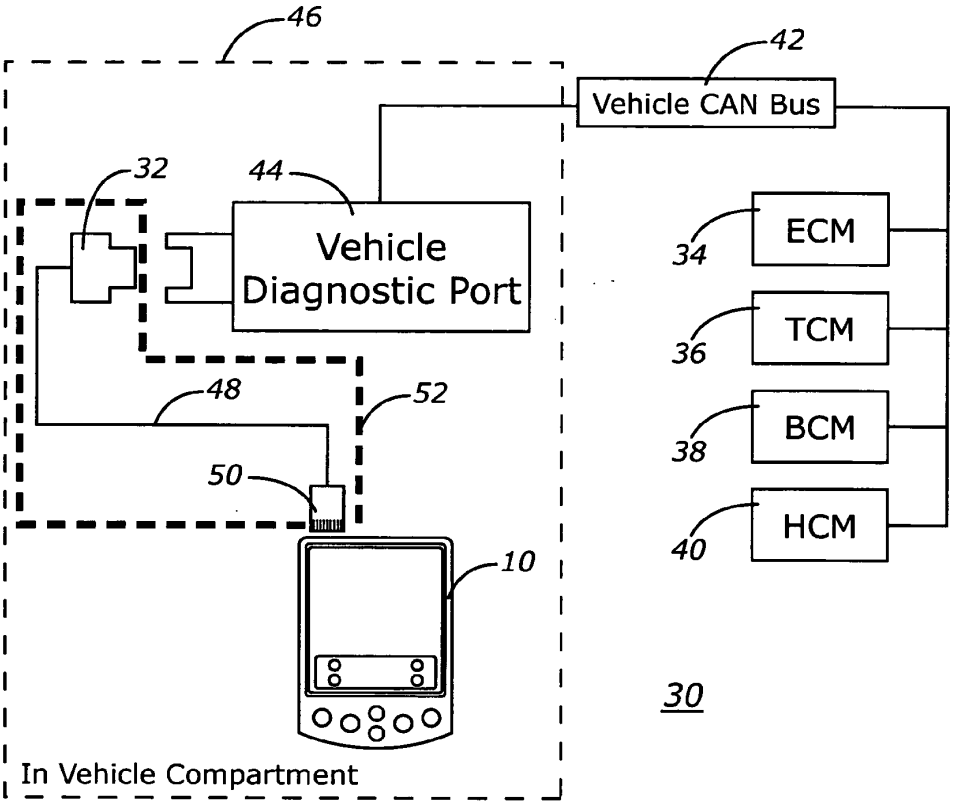

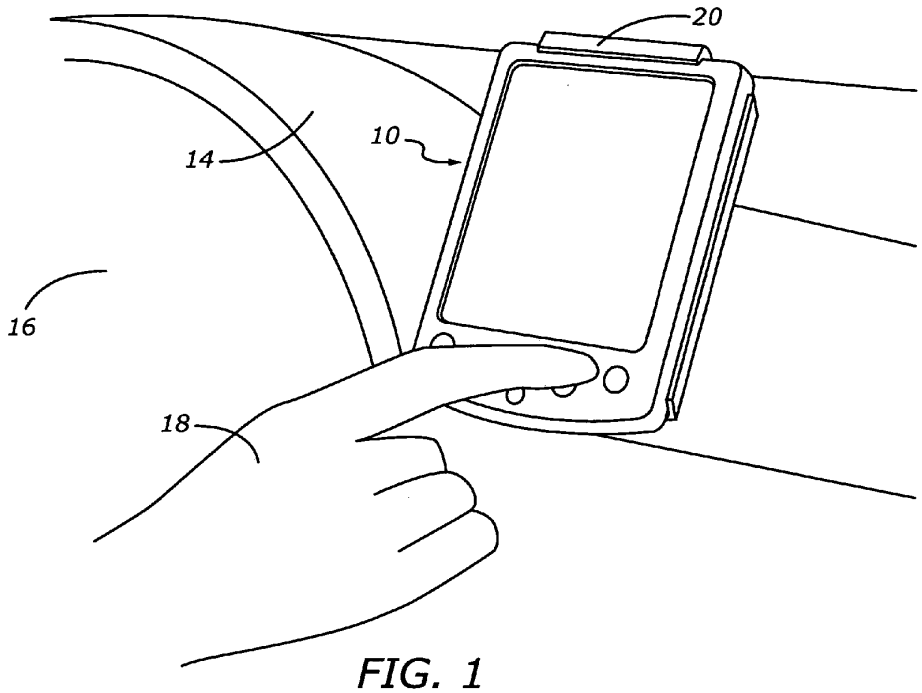

FIG. 1

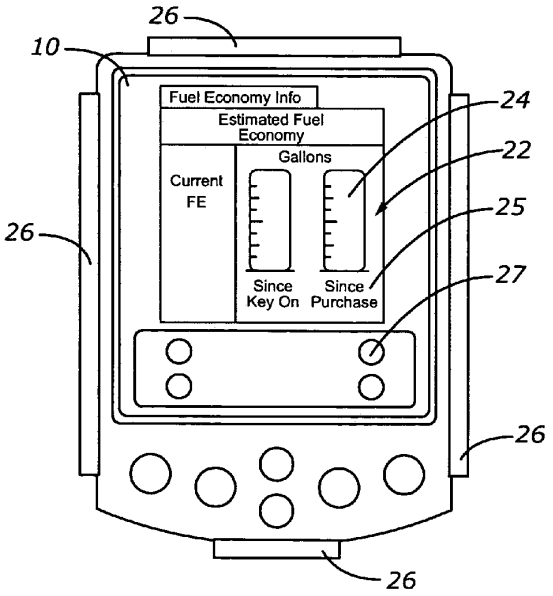

FIG. 2A

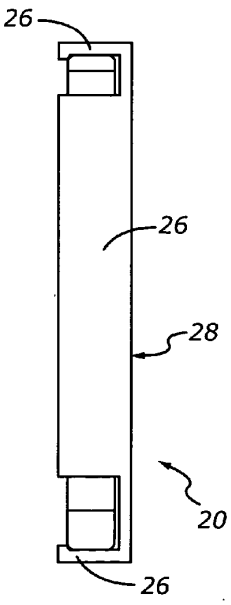

FIG. 2B

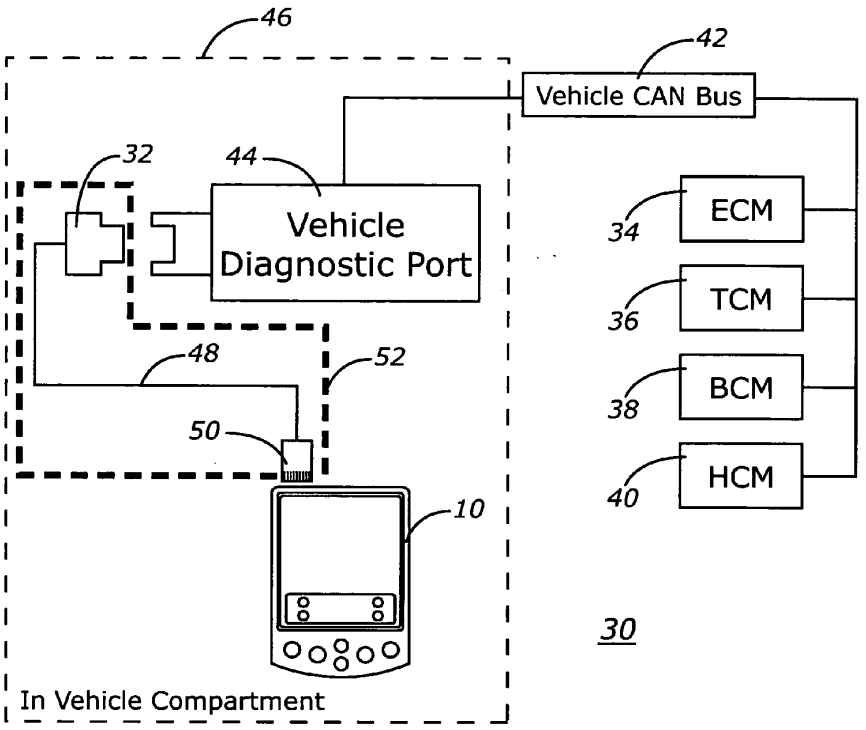
46
42
Vehicle CAN Bus
32
44
Vehicle
Diagnostic Port
34
ECM
36
TCM
38
BCM
40
HCM
48
52
50
10
30
In Vehicle Compartment

FIG. 3

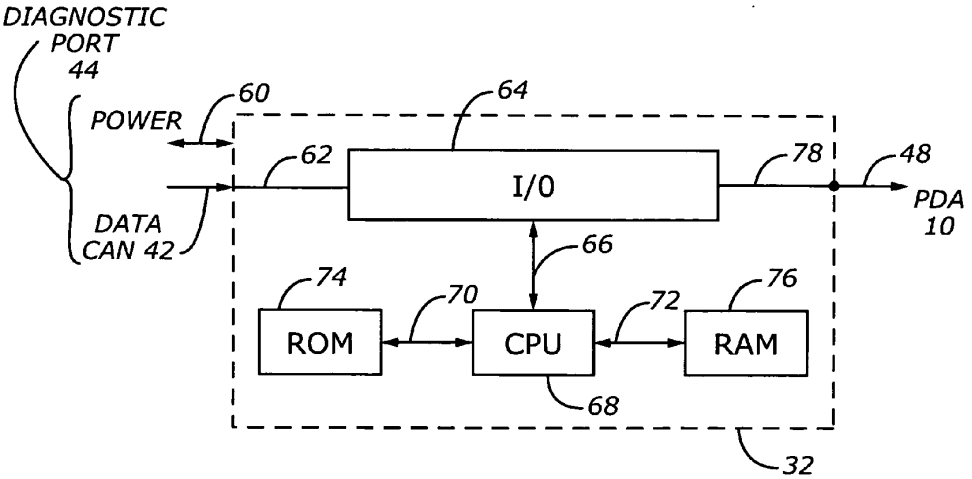
DIAGNOSTIC
PORT
44
POWER
60
64
62
I/O
78
48
PDA
10
DATA
CAN 42
66
74
70
72
76
ROM
CPU
RAM
68
32

FIG. 4

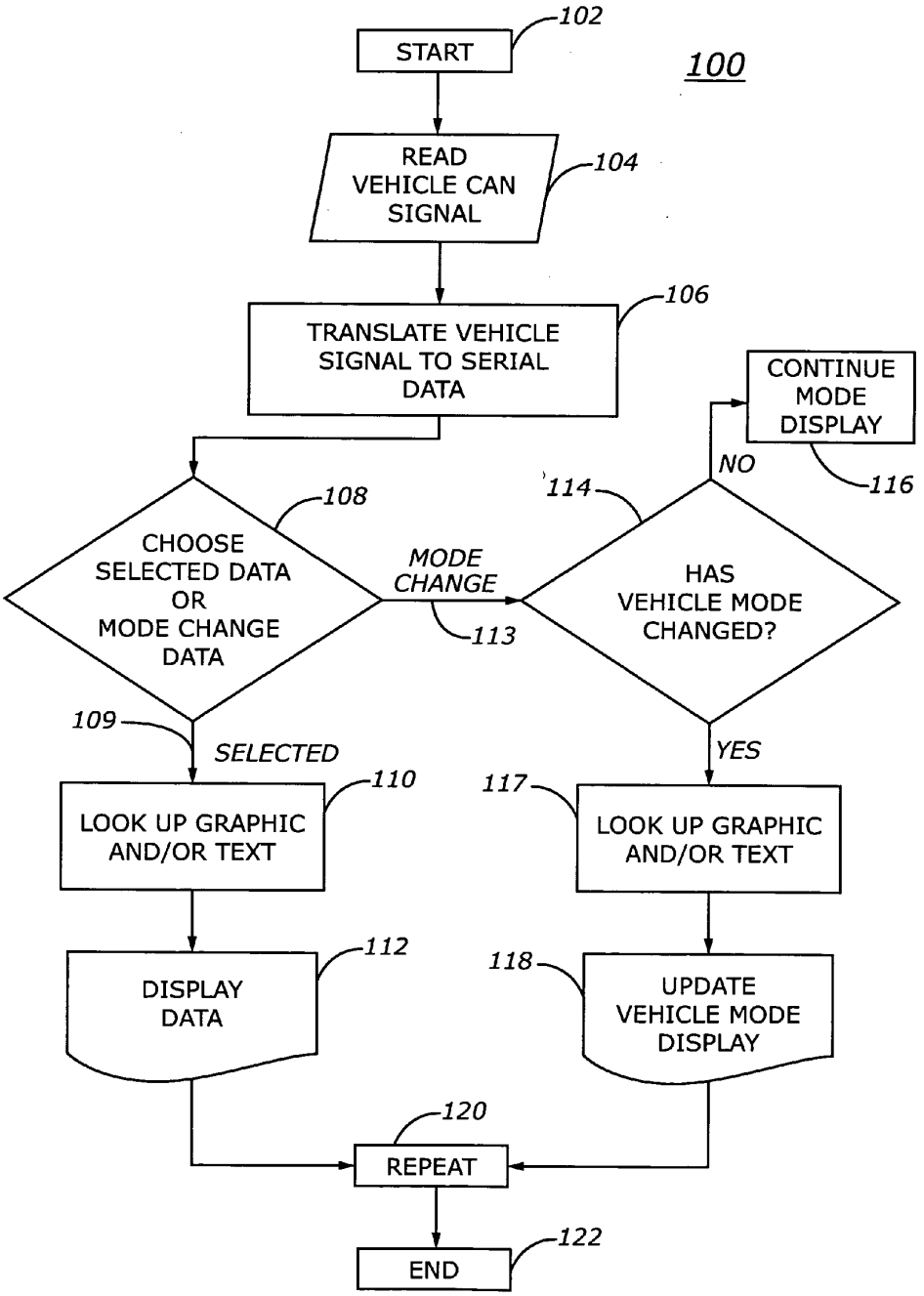
100
START
102
READ VEHICLE CAN SIGNAL
104
TRANSLATE VEHICLE SIGNAL TO SERIAL DATA
106
CONTINUE MODE DISPLAY
116
NO
114
CHOOSE SELECTED DATA OR MODE CHANGE DATA
108
MODE CHANGE
113
HAS VEHICLE MODE CHANGED?
109
SELECTED
YES
LOOK UP GRAPHIC AND/OR TEXT
110
117
LOOK UP GRAPHIC AND/OR TEXT
DISPLAY DATA
112
118
UPDATE VEHICLE MODE DISPLAY
120
REPEAT
END
122

FIG. 5

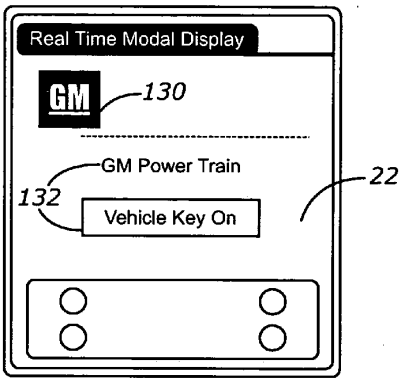

FIG. 6A

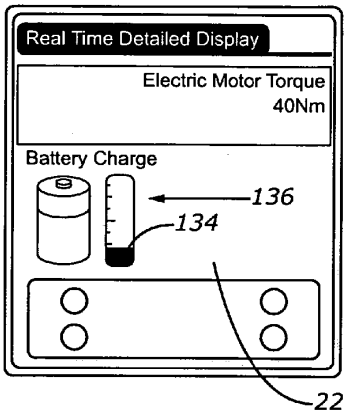

FIG. 6B

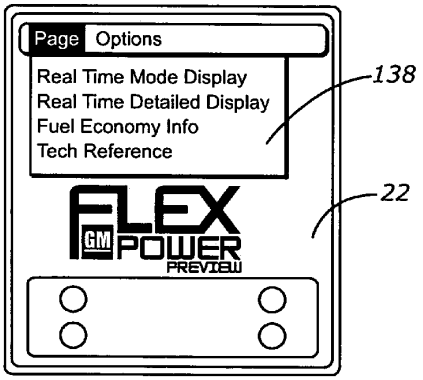

FIG. 6C

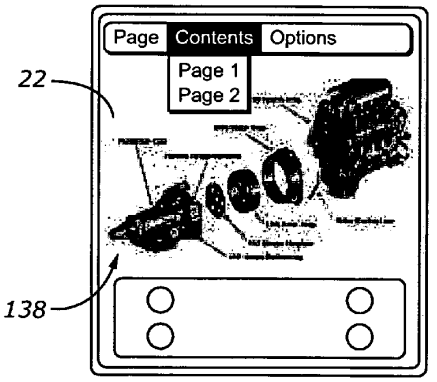

FIG. 6D

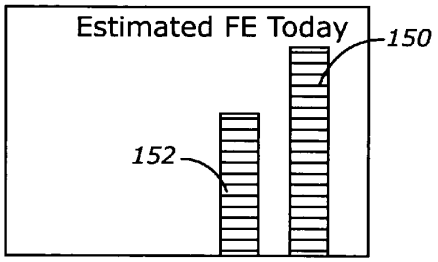

FIG. 7A

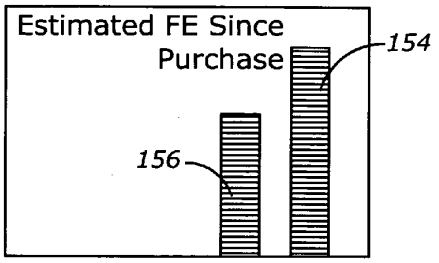

FIG. 7B

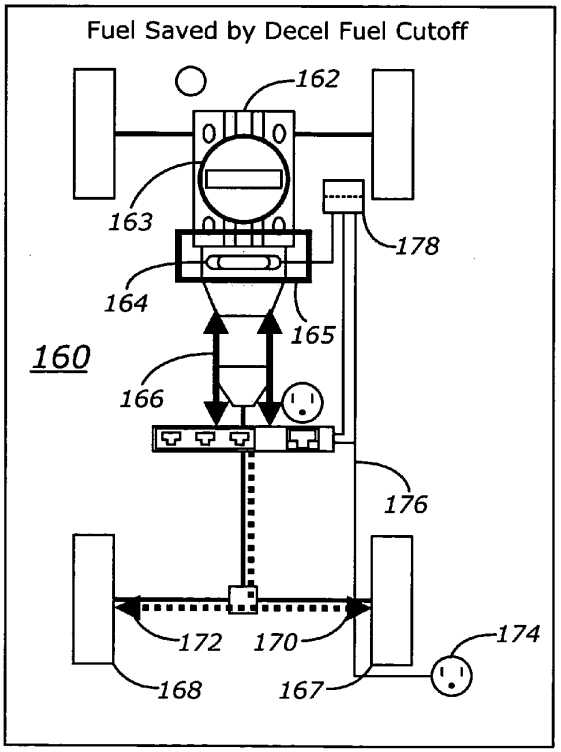

FIG. 7C

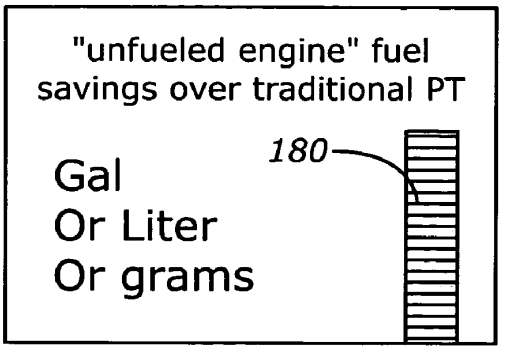

FIG. 8A

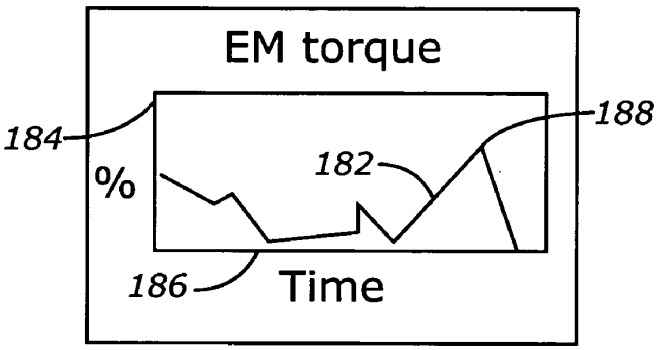

FIG. 8B

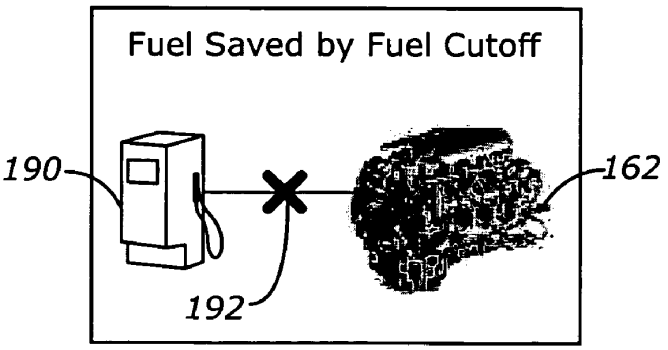

FIG. 8C

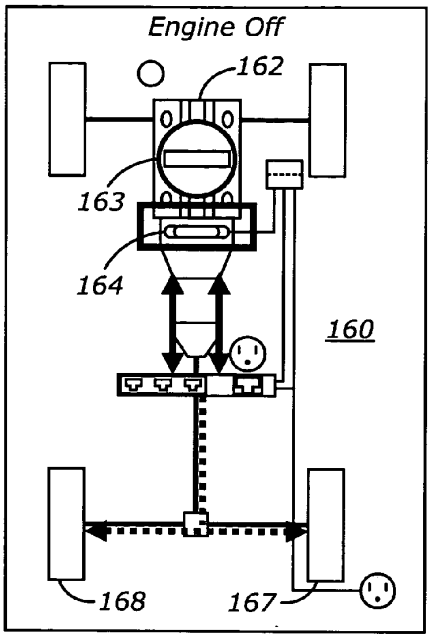

FIG. 9A

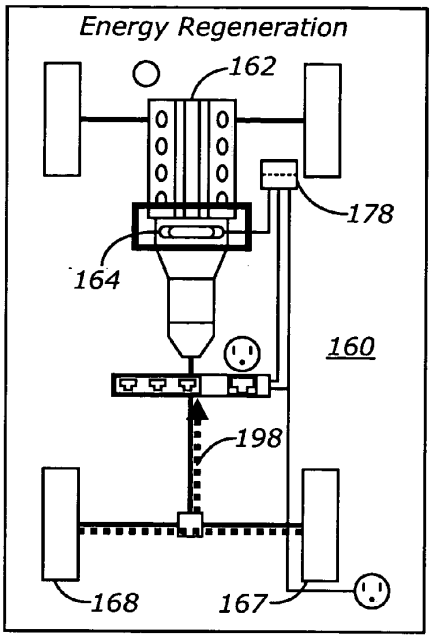

FIG. 9B

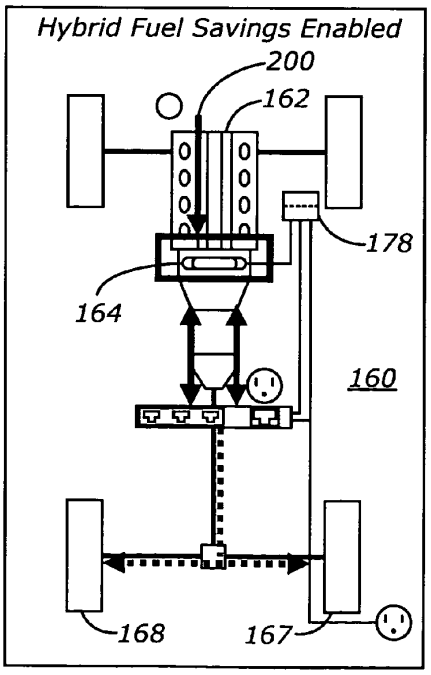

FIG. 9C

APPARATUS AND METHOD FOR DISPLAYING GRAPHICAL INFORMATION RELATING TO VEHICLE OPERATION

TECHNICAL FIELD

[0001] The present invention generally relates to an apparatus and a method for processing information provided by modules of a vehicle control system that are monitoring various events, and more particularly relates to displaying selected items of such information in graphical form to a driver or other user of the vehicle.

BACKGROUND

[0002] Many kinds of mechanical equipment utilize electrical sensors or transducers to provide electrical output signals for measuring parameters and/or identifying physical events related to the operation and condition of vehicular systems. Such output signals can be processed and displayed on a screen viewable by the driver or other user of the vehicle. The amount of information capable of being displayed is increasing as motorized vehicles continue to evolve. For instance, the recently introduced Parallel Hybrid Vehicle (PHV) utilizes an Internal Combustion (IC) engine and/or an Electric Motor (EM) to provide power to the vehicle drive wheels. There are significantly more modes of operation inherent in this PHV than in an older conventional vehicle having only an IC engine. These PHV operating modes include IC engine only, EM only, combined IC and EM and regenerative electric braking, for instance. With the exception of the IC engine only mode, these are all new modes of operation to most vehicle operators. Moreover conventional power trains also either presently include or are planned to include new technologies such as variable valve timing, displacement on demand, and alternative transmission shifting schedules, for example.

[0003] Presently information from vehicle control modules are displayed on custom, purpose built monitor systems having screens that are permanently installed in vehicles. Graphical and textual images on such screens presently provide limited graphical user interfaces (GUIs) to vehicle operators and/or technicians. However, such prior art solutions tend to be undesirably inflexible, expensive and limited in the scope of the information presented. For instance, prior art purpose built GUIs do not have the flexibility to simultaneously serve as information providers, diagnostic tools and teaching tools. Also, prior art GUIs that are integrated into vehicle dashboards require significant investments in engineering time and piece part costs. Moreover, such prior art GUIs generally do not display fuel savings from the operations of the previously mentioned new PHV and IC engine technologies that are designed to be mostly transparent to the vehicle operators and passengers. Also, as mentioned, one such new IC engine technology involves cylinder displacement on demand, which changes the number of active cylinders of an IC engine in response to changes in engine loading. A vehicle operator or driver may be aware of driveline events associated with changes in the displacement on demand system or changes in the mode of operation of a PHV system, but not know what specific vehicle operations are causing them.

[0004] Some customers or drivers prefer technology to be transparent. These customers do not want to be aware of the inter-workings and operation of their vehicles. Instead such customers only want to enjoy the benefits of the technology and are likely to be annoyed by purpose built GUIs that are integrated into vehicle dashboards. Unfortunately, such displays cannot be easily removed from the vehicle and thus can take up space that might be utilized for other applications. Other drivers or customers however view the new technologies as an important feature and are interested in viewing the new functions and the operations thereof.

[0005] In view of the foregoing, it should be appreciated that it is desirable to provide an inexpensive method and an apparatus providing a GUI for displaying selected information from vehicle control modules in a new and meaningful way. It is also desirable for such GUIs to provide a teaching tool for vehicle sales people, drivers, potential customers and other vehicle users. Furthermore, it is desirable for the apparatus and method to facilitate the logging of diagnostic data related to vehicular technologies so that such data can be provided to original equipment manufacturers or technicians. Moreover, it is desirable that such methods and apparatus have either no changes or only minimal changes in the other portions of the overall vehicle system. In addition, it is desirable that signal processing devices and display screens providing such GUIs be easily removed by users who prefer the technology to be transparent from vehicles without impacting such vehicles. Furthermore, it is desirable that such method and apparatus utilize Commercial Of The Shelf (COTS) products that can be reprogrammed as the need arises. Such uses of COTS products decrease costs and provide flexibility. Additionally, it is desired that such apparatus utilize diagnostic ports that are either already installed or planned to be installed in the interiors of the cabins of modern automotive vehicles. Furthermore, other desirable features and characteristics of the present invention will become apparent from the subsequent brief summary, detailed description, appended claims, and abstract, taken in conjunction with the accompanying drawings and the foregoing technical field and background.

BRIEF SUMMARY

[0006] A method is provided for displaying operational information of an automobile on a signal processing device within an interior cabin of the automobile. The apparatus comprises a first automobile control module configured to generate a first output signal corresponding to the operational information of the automobile and an interface circuit configured to couple the signal processing unit and the first automobile control module. The first interface circuit has a signal translating circuit that is configured to convert the first output signal for use by the signal processing device in displaying the operational information of the automobile. The apparatus also comprises a holder associated with the interface circuit and configured to removably attach the signal processing device to the interior cabin space of the automobile.

[0007] In addition to the apparatus, methods are provide for displaying operational information of an automobile on a signal processing device within an interior cabin of the automobile. The method comprises the steps of receiving output signals corresponding to the operational information of the automobile and modifying the output signals to provide modified output signals for use by the signal processing device in displaying the operational information of

the automobile. The method also comprises the steps of selecting at least one of the modified output signals and displaying the operational information of the automobile corresponding to the at least one of the modified output signals on the signal processing device within the interior cabin of the automobile.

BRIEF DESCRIPTION OF THE DRAWINGS

[**0008**] The present invention will hereinafter be described in conjunction with the appended drawing figures, wherein like reference numbers denote like elements, and

[**0009**] **FIG. 1** shows a view of a Personal Digital Assistant (PDA) affixed to the dashboard of a motorized vehicle;

[**0010**] **FIG. 2A** shows a front view and **FIG. 2B** shows an end view of the PDA of **FIG. 1** in a holder that enables the PDA to be easily removed from the dashboard;

[**0011**] **FIG. 3** is a simplified general diagram of an automotive control system including the PDA of **FIG. 1** and an interface device for the PDA of **FIG. 1**;

[**0012**] **FIG. 4** is a block diagram of the interface device of **FIG. 3**;

[**0013**] **FIG. 5** is a flow chart of a method of an exemplary embodiment of the invention;

[**0014**] **FIGS. 6A, 6B**, 6C and 6D show PDA screens with various displays; and

[**0015**] **FIGS. 7A, 7B** and 7C show PDA screen concepts related to vehicle fuel usage;

[**0016**] **FIGS. 8A, 8B** and 8C show various PDA screen concepts; and

[**0017**] **FIGS. 9A, 9B** and 9C show PDA screen concepts related to the modes of operation of a parallel hybrid vehicle.

DETAILED DESCRIPTION

[**0018**] The following detailed description is merely exemplary in nature and is not intended to limit the invention or the application and uses of the invention. Furthermore, there is no intention to be bound by any expressed or implied theory presented in the preceding technical field, background, brief summary or the following detailed description.

[**0019**] Referring to **FIG. 1**, a signal processing device or personal digital assistant (PDA) **10** is shown affixed to the dashboard **14** within the interior **16** of the cabin space of a motorized vehicle (not shown) and preferably within easy reach of the hand **18** of an operator. PDA **10** can be a COTS device such as a commonly available Palm Pilot, for instance. A holder or docking device **20** that can be similar to a cell phone holder enables PDA **10** to be easily removed from the vehicle if PDA **10** is not needed, thus freeing up the space otherwise taken by PDA **10**.

[**0020**] **FIG. 2 A** shows a front view and **FIG. 2B** shows an end view of the PDA **10** and the holder or docking device **20**. PDA **10** includes a screen **22** for displaying graphical information **24** and/or textual information **25**. A user generally operates PDA **10** by using known controls such as a wiggle-stick, stylus, a finger actuated to pad, for example. (not shown) and/or buttons **27**. Holder **20** preferably has top, bottom and side members **26** for gripping the case of the PDA **10**. **FIG. 2B** shows the back surface **28** of holder **20**.

[**0021**] **FIG. 3** is a simplified general diagram of an automotive control system **30** in which an exemplary embodiment of this invention is utilized and which includes an interface device **32** for PDA **10**. In this illustrative example, system **30** includes an engine control module **34**, a transmission control module **36** and a body control module **38** that are of known configurations. For PHV applications, a hybrid module **40** is also preferably included in the system **30**. Each of these modules (**34**, **36**, **38**) or other modules include sensors providing output signals or data indicative of monitored events or parameters. A vehicle Controller Area Network (CAN) bus **42** electrically connects or conducts in a known manner the data from modules (**34**, **36**, **38**, **40**) to a commonly used vehicle diagnostic port **44**. Port **44** is located in the interior **16** of the cabin space for the vehicle driver as indicated by dashed block **46**. A PDA interface **32** is arranged to plug into or mate with port **44**. Cable **48** and connector **50** connect PDA interface **32** to PDA **10** as indicated by dashed block **52**.

[**0022**] **FIG. 4** shows a block diagram for the PDA interface and signal translating device **32** of **FIG. 3**. Diagnostic port **44** provides power on conductor **60** for the components of PDA interface **32**. Also, port **44** provides data from CAN **42** through conductor **62** to an Input/Output (I/O) device **64**. Two way conductor **66** interconnects I/O device **64** with a Central Processing Unit (CPU) **68** that may include one or more microprocessors or microcontrollers. Two-way conductors (**70**, **72**) respectively interconnect CPU **68** with read only memory (ROM) **74** and random access memory (RAM) **76**. Conductor **78** connects the output of I/O **64** to cable **48**. In operation, PDA interface **32** translates the data from CAN **42** into serial data that can be processed by PDA **10**. I/O **64** provides any necessary shifts in the levels of such data. In addition, ROM **74** provides temporary memory storage of such data. CPU **68** performs and controls logic operations under the directions of programs stored in RAM **76**.

[**0023**] PDA **10** effectuates a GUI method **100** for displaying real-time data in the form of meaningful screens indicating vehicle operation. Method **100** is shown by the flow chart of **FIG. 5** and provides another preferred exemplary embodiment of the present invention. The data is selected either by a user or selected automatically, such as for mode display data. The apparatuses (**30**, **32**) respectively of **FIG. 3** and **FIG. 4** effectuate method **100**. Specifically, the processor or processors **68** and memories (**74**, **76**) in PDA interface block **32** of **FIG. 4** are configured to cooperate with PDA **10** to perform the steps of method **100**. The series of steps carried out in PDA interface **32** can be stored as a sequence of controller steps in ROM **76**.

[**0024**] Generally, method **100** has either a user controlled or a vehicle mode controlled state of operation. More specifically, a processing cycle of method **100** of **FIG. 5** begins with step **102** in response to an interrupt signal. This interrupt signal causes I/O module **64** of **FIG. 4** to read the vehicle CAN signals per input step **104** and deliver corresponding signals to CPU **68**. The CAN signals are then translated into serial data per function step **106** by interface **32**.

[**0025**] In decision step **108** the user determines whether to view user selected data or vehicle determined data such as the mode changes of a hybrid vehicle, for instance. If user selected data as indicated by the method flow line **109** is

chosen then the PDA **10** is directed to lookup a particular predetermined graphic and/or text per function step **110**. Next, the graphic and/or text is displayed by PDA **10** per step **112**. Alternatively, if hybrid mode change is selected as indicated by the method flow line **113**, then decision step **114** determines whether the vehicle mode has changed. If the answer is No, then the present mode continues to be displayed per function step **116**. On the other hand, if the mode has changed then the answer is Yes and function step **117** causes the appropriate graphic and/or text to be retrieved and displayed per step **118**. PDA **10** continues to repeat per step **120** some or all of the above-described steps until a user shuts down PDA **10** per the "END" step **122**.

[**0026**] The following GUI Storyboard descriptions provide Screen Concepts in Column 1 for PDA **10** corresponding to the Hybrid Powertrain of Column 2 and Expected Actions for PDA **10** of Column 3. Storyboard 1 and **FIGS. 6A, 6B**, 6C and 6D depict a variety of screen concepts.

Storyboard 1

[**0027**]

Column 1	Column 2	Column 3
Screens shown by:	Hybrid Powertrain	Expected Action
FIG. 6A	Key On	Display GM Powered Logo and a key state message.
FIG. 6B	Battery State of Charge	Display an animated battery that changes with state of charge
FIG. 6C FIG. 6D	Upon User Request	Display interactive introduction to teaching tool for PHV. Multiple pages.

[**0028**] More specifically, referring to **FIG. 4**, **FIG. 5** and **FIG. 6A**, upon the initial start up step **102** of method **100**, CPU **68** is programmed to automatically provide signals through I/O **64**, which cause PDA **10** to look up and display logo **130** and text **132** on the screen **22**. This action corresponds to steps **110** and **112** of method **100**. Next data is obtained from the HCM **40** of **FIG. 3** relating to the state of EM battery charge and the level **134** of graphic **136** is adjusted by PDA **10** either automatically or upon user request per step **108** as shown in **FIG. 6B**. The user could then choose Tech Reference from the menu **138** shown in **FIG. 6C** to cause PDA **10** to look up and show the display related to a teaching tool for the PHV indicated by the text and graphical images **138** of **FIG. 6C**. In this case, multiple pages beginning with the page shown in **FIG. 6D** are displayed by PDA **10**. The teaching tool provides insight to sales people, drivers and/or customers into the motivation and the workings of the new technology.

[**0029**] Storyboard 2 assumes the user has chosen to view Fuel Economy Info from menu **138** of **FIG. 6C**.

Storyboard 2

[**0030**]

Column 1	Column 2	Column 3
Screen Concepts shown by:	Hybrid Powertrain	Expected Action
FIG. 7A	Upon key off or user request	Display message "Est. Fuel Economy Today" Use BSFC/Odo formulas
FIG.7B	Upon user request	Display message "Estimated Fuel Economy Since Purchase" Store these values
FIG. 7C	Decel Fuel Cut off	Display message "Fuel Saved By Decel Fuel Cut Off"

[**0031**] As used herein, BSFC refers to a Brake Specific Fuel Consumption signal and Odo refers to an odometer signal indicating how many miles the vehicle has traveled. Generally, when the driver or other user requests detailed real time selected data per method flow line **109** of **FIG. 5**, then calculations can be made within PDA **10** to turn the serial data from interface **32** into meaningful information and graphics. For instance, if Fuel Economy Info is selected from menu **138** of **FIG. 6C** by a user then the BSFC fuel rate from ECM **34** and the Odo signals from BCM **38** can be used to calculate either the amount of fuel saved or the Fuel Economy (FE) of a hybrid vehicle. These amounts can be respectively compared to the amount of fuel saved or to the fuel economy of a comparable traditional, non-hybrid vehicle. Specifically, **FIG. 7A** shows a bar graph **150** indicating Estimated Fuel Economy Today of the hybrid vehicle and another bar graph **152** indicating the FE of the traditional vehicle. Also, **FIG. 7B** shows a bar graph **154** indicating Estimated FE since purchase of the hybrid vehicle and another bar graph **156** indicating the estimated FE of the traditional vehicle.

[**0032**] **FIG. 7C** shows a graphic representation or ICON of the main functional parts of a parallel hybrid vehicle **160** having an engine **162** and an EM **164**. The graphic of **FIG. 7C** indicates the hybrid vehicle is in a deceleration fuel cutoff mode (Decel Fuel Cut Off). The Decel Fuel Cut Off (DFCO) graphic of **FIG. 7C** occurs when ECM **34** has detected that that the driver has lifted his/her foot off of the accelerator and that the vehicle is coasting and/or decelerating so that the fuel to the IC engine **162** is cutoff thus saving additional fuel. Specifically, the circular graphic **163** on the IC engine **162** indicates that the IC engine is inoperative. The rectangular graphic **165** on the EM **164** indicates that the electric motor is operative and supplying power through the transmission **166** to the rear drive wheels (**167**, **168**) as indicated by respective arrows (**170**, **172**). Hence, the graphical representation of **FIG. 7C** indicates which of the main part of hybrid vehicle **160** are operational during the DFCO mode of operation. Power plug **174** is connected through vehicle power line **176** to storage battery **178**. Plug **174** mates with the outlet of an appropriate source of electrical power (not shown) for charging battery **178**.

[**0033**] The following Storyboard 3 occurs in response to the user selecting Real Time Detailed Display from PDA menu **138** of **FIG. 6C**. Selection of the real time display

enables the driver to view selected details about the operation of the vehicle rather then just pop up images such as those displayed in response to selection of Real Time Mode Display from menu **138** corresponding to the powertrain modes. IEO refers to the off time of the IC engine and PT refers to powertrain.

Storyboard 3

[**0034**]

Column 1	Column 2	Column 3
Screen Concepts shown by:	Hybrid Powertrain	Expected Action
FIG. 8A	Upon key off or user request	Display message: "unfueled engine" fuel savings over traditional PT", Use cumulative IEO time X traditional idle fuel rate = gallons
FIG. 8B	Upon user request	Display message "EM torque", Give some indication of hybrid operation and events
FIG. 8C	Torque Smoothing	Display message "Fuel Saved by Fuel Cutoff", for IEO or DFCO

[**0035**] Such detailed data includes bar graph **180** of **FIG. 8A** that indicates the amount of fuel saved. Also, the data includes line graph **182** of **FIG. 8B** that indicates EM torque percent (%) measured by ordinate axis **184** as a function of a rolling time scale indicated by abscissa **186**. An interested driver can correlate the increases and decreases of the magnitude of graph **182** with events either felt or not felt while driving the hybrid vehicle. For instance, point **188** could represent that the EM is working with to the IC engine to provide increased performance. A graph such as **182** could also be used to represent the displacement on demand operation of an IC engine. **FIG. 8C** indicates that fuel **190** is being saved **192** because of fuel cutoff due to either IEO or DFCO.

[**0036**] The following Storyboard 4 occurs in response to the user selecting "Real Time Mode Display" from the menu **138** of **FIG. 6C**. Storyboard 4 and **FIGS. 9A, 9B** and **9C** relate to various modes of operation of the parallel hybrid vehicle **160**.

Storyboard 4

[**0037**]

Column 1	Column 2	Column 3
Screen Concepts shown by:	Hybrid Powertrain State	Expected Action
FIG. 9A	IC Engine Off	Display message "Engine Off"
FIG. 9B	Regeneration through Electric Machine	Display message "Energy Regeneration"
FIG. 9C	Torque Smoothing	Display message "Hybrid Fuel Saving Enabled"

[**0038**] In the case of Storyboard 4, steps **114**, **116** or **117** and **118** of method **100** of **FIG. 5** are effectuated in response to signals from HCM **40**. **FIG. 9A** shows the IC Engine Off graphic **163** on engine **162**. **FIG. 9B** shows the Energy Regeneration mode wherein the drive wheels **166** and **168** turn EM **164** as indicated by dotted arrow **198** that operates as a generator to recharge battery **178**. Arrow **200** of **FIG. 9C** indicates that IC engine **162** and EM **164** are operating together to provide power to drive wheels **167** and **168** to effectuate the Hybrid Fuel Savings Enabled mode.

[**0039**] PDA **10** can be configured to log data related to PHV **160** on an ongoing basis. Also, PDA **10** can sense if there has been a malfunction signal sent from any of the vehicle controllers and PDA **10** can link back in time and save logged data. This logged data can be downloaded to a personal computer and emailed to technical support to help diagnose malfunctions. Also, the above-described concepts can be extended to other applications of new technologies such as displacement on demand, variable valve timing and continuously variable transmission. In these cases, signals can are also obtained from any or all of respective vehicle control modules ECM **34**, TCM **36** and/or BCM **38** and interface **32** is utilized to control other displays programmed into PDA **10**.

[**0040**] Thus an inexpensive method **100** and an apparatus **30** has been described for providing a GUI for displaying selected information from existing motorized vehicle control modules of **FIG. 3** in a new and meaningful way. The disclosed GUI is suitable for providing a teaching tool for vehicle sales people, operators and customers. Furthermore, the apparatus **30** and method **100** facilitate logging of diagnostic data related to new technologies so that such data can be provided to original equipment manufacturers. Moreover, the method **100** and apparatus **30** requires either no or only minimal changes in the other portions of the overall vehicle system such as either wiring changes or the redesign of the vehicle. This is because circuit **32** of apparatus **30** is located in a plug which mates with the vehicle diagnostic port **44**. In addition customers who prefer that technology be transparent can easily remove the PDA **10**, cable **48** and interface **32** from a vehicle. Furthermore method **100** and apparatus **30** utilize COTS such as PDA **10** that can be reprogrammed as the need arises. Such uses of COTS decrease costs and provide flexibility.

[**0041**] While at least one exemplary embodiment has been presented in the foregoing detailed description, it should be appreciated that a vast number of variations exist. It should also be appreciated that these exemplary embodiments are only examples, and are not intended to limit the scope, applicability, or configuration of the invention in any way. Rather, the foregoing detailed description provides those skilled in the art with a convenient road map for implementing an exemplary embodiment of the invention. It being understood that various changes may be made in the function and arrangement of elements described in any exemplary embodiment without departing from the spirit and scope of the invention as set forth in the appended claims and the legal equivalents thereof.

What is claimed is:

1. An apparatus for displaying operational information of an automobile on a signal processing device within an interior cabin of the automobile, comprising:

a first automobile control module configured to generate a first output signal corresponding to the operational information of the automobile;

an interface circuit configured to couple the signal processing unit and said first automobile control module, said interface circuit having a signal translating circuit that is configured to convert said first output signal for use by said signal processing device in displaying the operational information of the automobile; and

a holder associated with said interface circuit and configured to removably attach the signal processing device to the interior cabin space of the automobile.

2. The apparatus of claim 1, wherein said signal processing device is a Personal Digital Assistant (PDA).

3. The apparatus of claim 2, wherein said signal translating circuit converts said first output signal into a serial digital signal for use by said signal processing device in displaying the operational information of the automobile.

4. The apparatus of claim 1, further comprising a second automobile control module coupled to said interface circuit and configured to generate a second output signal corresponding to the operational information of the automobile, which is converted by said signal translating circuit for use by said signal processing device in displaying the operational information of the automobile.

5. The apparatus of claim 1, wherein said first automobile control module is an engine control module.

6. The apparatus of claim 1, wherein said first automobile control module is a transmission control module.

7. The apparatus of claim 1, wherein said automobile is a hybrid automobile.

8. The apparatus of claim 7, wherein the operational information of the automobile is energy regeneration by the hybrid automobile.

9. The apparatus of claim 7, wherein the operational information of the automobile is fuel saving of the hybrid vehicle.

10. A method for displaying operational information of an automobile on a signal processing device within an interior cabin of the automobile, comprising the steps of:

receiving a plurality of output signals corresponding to the operational information of the automobile;

modifying said plurality of output signals to provide a plurality of modified output signals for use by said signal processing device in displaying the operational information of the automobile;

selecting at least one of said plurality of modified output signals; and

displaying said operational information of the automobile corresponding to said at least one of said plurality of modified output signals on the signal processing device within the interior cabin of the automobile.

11. The method of claim 10, wherein said step of selecting at least one of said plurality of modified signals is accomplished without human interaction.

12. The method of claim 10, wherein said step of selecting at least one of said plurality of modified signals is accomplished with human interaction.

13. The method of claim 10, wherein at least part of the operational information of the automobile is a system mode change.

14. The method of claim 10, wherein said signal processing device is a Personal Digital Assistant (PDA).

15. The method of claim 10, wherein said modifying said plurality of output signals comprises converting said plurality of output signals into a serial digital signal for use by said signal processing device in displaying the operational information of the automobile.

16. The method of claim 10, wherein said operational information of the automobile is engine control information.

17. The method of claim 10, wherein said operational information of the automobile is transmission control information.

18. The method of claim 10, wherein said automobile is a hybrid automobile.

19. The method of claim 18, wherein the operational information of the automobile is energy regeneration by the hybrid automobile.

20. The method of claim 18, wherein the operational information of the automobile is fuel saving of the hybrid vehicle.

* * * * *