UNITED STATES PATENT AND TRADEMARK OFFICE

BEFORE THE PATENT TRIAL AND APPEAL BOARD

TESLA, INC.,
Petitioner,

v.

CHARGE FUSION TECHNOLOGIES, LLC,
Patent Owner.

Case IPR2022-01217
Patent 10,998,753

PATENT OWNER'S PRELIMINARY RESPONSE

TABLE OF CONTENTS

TABLE OF AUTHORITIES iv

EXHIBIT LIST ix

CLAIM LISTING x

I. INTRODUCTION 1

II. THE '788 PATENT PRESENTS A NOVEL SYSTEM AND METHOD FOR ELECTRIC VEHICLE CHARGING AND POWER ANAGEMENT 2

III. OVERVIEW OF THE RELEVANT ALLEGED PRIOR ART 4

A. Kato (Ex. 1008) 4

B. Eberhard (Ex. 1009) 6

C. Tesla Manual (Exhibit 1005) 8

IV. STANDARDS 10

A. Institution of an IPR 10

B. Petitions Based on Obviousness 11

C. Claim Construction 13

V. PETITIONER'S PROPOSED OBVIOUSNESS CHALLENGES 13

VI. LEVEL OF ORDINARY SKILL IN THE ART 13

VII. GROUND 1: PETITIONER HAS FAILED TO ESTABLISH A REASONABLE LIKELIHOOD OF SUCCESS IN SHOWING KATO IN VIEW OF EBERHARD AND THE TESLA MANUAL RENDER ANY OF THE CHALLENGED CLAIMS (1-10) OBVIOUS 14

A. Petitioner Has Not Articulated Any Meaningful Motivation to Combine or a Reasonable Expectation of Success 15

1. Petitioner has not shown a motivation to combine Kato with Eberhard and the Tesla Manual 16

(a) Kato and Eberhard propose different solutions to different problems 16

(b) Petitioner's reason to combine lacks merit because it is based on hindsight reasoning that uses the claims as a roadmap to find the claim elements 19

2. Petitioner Has Not Shown a Reasonable Expectation of Success in Reconfiguring Kato with Eberhard and the Tesla Manual 23

B. The '646 Provisional provides written description support and the claims have a priority date of July 11, 2008, thus Eberhard and the 2008 Tesla Roadster Touch Screen Users Manual are not prior art 27

1. The '646 Provisional supports the "vehicle charge indicator" element 27

2. The '646 Provisional supports the "slider" element 31

3. The '646 Provisional supports the "computing a charging schedule" element 33

C. Petitioner fails to establish that the 2008 Tesla Roadster Touch Screen Users Manual is a printed publication 35

1. No indicia on the face of the Tesla Manual that it was a conventional publication 36
2. Lack of Evidence that the Tesla Manual was publicly accessible when there is no corroborating metadata of publication on Tesla's website, no declaration from the Internet Archive, and no declaration from an expert that it is prior art 37
3. It is questionable whether Petitioner's declarant was a Tesla employee at the 2008 time period in question and whether she has personal knowledge of the alleged facts supporting public accessibility 38
4. Even if the alleged fact that approximately 100 Tesla Manual were shipped to customers is true, that does not meet the standard for public accessibility because the Tesla Manual was too expensive for a POSITA to access..... 39

D. Kato in view of Eberhard and the Tesla Manual fails to teach the slider element 46

VIII. CONCLUSION..... 51

TABLE OF AUTHORITIES

CASES

Abbott Labs. v. Sandoz, Inc.,
544 F.3d 1341 (Fed. Cir. 2008).....12

Arctic Cat Inc. v. Bombardier Recreational Prod. Inc.,
876 F.3d 1350 (Fed. Cir. 2017).....27

Ashland Oil v. Delta Resins & Refractories,
776 F.2d 281 (Fed. Cir. 1985).....12

Bayer Schering Pharma AG v. Barr Labs., Inc.,
575 F.3d 1341 (Fed. Cir. 2009)..... 12, 13

Belden Inc. v. Berk-Tek LLC,
805 F.3d 1064 (Fed. Cir. 2015).....22

Blue Calypso, LLC v. Groupon, Inc.,
815 F.3d 1331 (Fed. Cir. 2016) (internal quotation omitted)..... 28, 35

Broadcom Corp. v. Emulex Corp.,
732 F.3d 1325 (Fed. Cir. 2013).....16

Centripetal Networks, Inc. v. Cisco Sys., Inc.,
847 F. App'x 869 (Fed. Cir.), cert. denied, 211 L. Ed.
2d 106, 142 S. Ct. 240 (2021)..... 40, 43, 44

GoPro, Inc. v. Contour IP Holding LLC,
908 F.3d 690 (Fed. Cir. 2018).....43

Graham v. John Deere Co. of Kansas City,
383 U.S. 1 (1966).....11

In re GPAC Inc.,
57 F.3d 1573 (Fed. Cir. 1995).....14

In re Magnum Oil Tools Int'l, Ltd.,
829 F.3d 1364 (Fed. Cir. 2016).....10

In re Nuvasive, Inc.,
842 F. 3d 1376 (Fed. Cir. 2016).....23

In re Stepan Co.,
868 F.3d 1342 (Fed. Cir. 2017).....22

Intelligent BioSystems v. Illumina Cambridge ltd.,
821 F.3d 1359 (Fed. Cir. 2016).....15

InTouch Techs., Inc. v. VGo Comm'ns., Inc.,
751 F.3d 1327 (Fed. Cir. 2014).....20

Jazz Pharms., Inc. v. Amneal Pharms., LLC,
895 F.3d 1347 (Fed. Cir. 2018).....40

KEYnetik, Inc. v. Samsung Elecs. Co., Ltd.,
No. 2020-1271, 2021 WL 274723 (Fed. Cir. Jan. 27, 2021).....26

Kinetic Concepts, Inc. v. Smith & Nephew, Inc.,
688 F.3d 1342 (Fed. Cir. 2012).....16

KSR Int'l Co. v. Teleflex, Inc.,
550 U.S. 398 (2007)..... 12, 19, 20

Lockwood v. Am. Airlines, Inc.,
107 F.3d 1565 (Fed. Cir. 1997).....28

Nobel Biocare Servs. AG v. Instradent USA, Inc.,
903 F.3d 1365 (Fed. Cir. 2018).....35

Phillips v. AWH Corp.,
415 F.3d 1303 (Fed. Cir. 2005) 13

Ruiz v. A.B. Chance Co.,
357 F.3d 1270 (Fed. Cir 2004).....22

Samsung Elecs. Co., Ltd. v. Elm 3DS Innovations, LLC,
925 F.3d 1373 (Fed. Cir. 2019)..... 15, 27, 45

Scriptpro, LLC v. Innovation Assoc., Inc.,
762 F.3d 1355 (Fed. Cir. 2014)..... 28, 30

Takeda Pharm. Co. Ltd. v. Torrent Pharms. Ltd.,
No. 2020-1552, 2021 WL 560763 (Fed. Cir. Feb. 16, 2021) 27

Tech. Licensing Corp. v. Videotek, Inc.,
545 F.3d 1316 (Fed. Cir. 2008).....28

Virginia Innovation Scis. v. Samsung Elecs. Co.,
983 F. Supp. 2d 713 (E.D. Va. Jan. 8, 2014) 46

STATUTES

35 U.S.C. § 312(a)(3).....10
35 U.S.C. § 314(a) 10
35 U.S.C. § 316(e); 10
37 C.F.R. § 42.100(b) 13
37 C.F.R. § 42.104(b)(4).....11
37 C.F.R. § 42.104(b)(5).....11

P.T.A.B. PAPERS

Abiomed, Inc. v. Maquet Cardiovascular, LLC,
IPR2017-01204, Paper 8 (P.T.A.B. Oct. 23, 2017) 22

Apotex Inc. v. Wyeth LLC,
IPR2014-00115, Paper 94 (P.T.A.B. Apr. 20, 2015)..... 11, 15

Apple Inc. v. California Inst. Of Tech.,
No. IPR2017-00219, 2018 WL 6828780 (P.T.A.B. Dec. 27, 2018) 25

ASM IP Holding B.V. v. Kokusai Elec. Corp.,
IPR2019-00369, Paper 8 (P.T.A.B. June 27, 2019)..... 41, 42, 45

Google Inc. v. EveryMD.com LLC,
IPR2014-00347, Paper 9 (P.T.A.B. May 22, 2014) 11

Halliburton Energy Servs. v. Dynamic 3D Geosolutions LLC,
IPR2014-01186, Paper 18 (P.T.A.B. Feb. 18, 2015).....46

Hulu, LLC v. Sound View Innovations, LLC,
No. IPR2018-01039, 2019 WL 7000067 (P.T.A.B. Dec. 20, 2019) ..... passim

Johns Manville Corp. v. Knauf Insulation, Inc.,
IPR2018-00827, Paper 9 (P.T.A.B. Oct. 16, 2018) 15

Kinetic Techs., Inc. v. Skyworks Sols., Inc.,
No. IPR2014-00529, Paper 8 (P.T.A.B. Sep. 23, 2014).....19

Syncro Soft SRL v. Altova Gmbh,
IPR2018-00660, Paper 6 (P.T.A.B. Sept. 5, 2018).....37

Tennant Co. v. Oxygenator Water Techs., Inc.,
No. IPR2021-00625, 2021 WL 3709262 (P.T.A.B. Aug. 20, 2021).....19

VMAC Global Tech. Inc. v. Vanair Man., Inc.,
IPR2018-00670, Paper 9 (P.T.A.B. Aug. 10, 2018 ..... 40, 44

EXHIBIT LIST

Currently Filed – Patent Owner

Ex. No.	Description
2001	Declaration of Dr. Steven Goldberg
2002	Declaration of Ms. Lis Fraser in Case No. 8:19-cv-01422-JLS-JDE (C.D. California) on January 17, 2020
2003	Declaration of Ms. Lis Fraser in Case No. 1:21-cv-00198-LEK-KJM (D. Hawaii) on July 1, 2021
2004	Declaration of Ms. Lis Fraser in Case No. 8:21-cv-00060-PSG-JDE (C.D. California) on February 10, 2022
2005	2007 Tesla Road Test Article
2006	Apple iPhone In-Depth Review YouTube Video PDF

CLAIM LISTING

Claim 1	
1[pre]	An electrical charging system, comprising:
1[a]	one or more processing devices;
1[b]	a non-transitory memory device in communication with the one or more processing devices,
1[c]	the non-transitory memory storing instructions that when executed by the one or more processing devices, result in:
1[d]	receiving information indicative of a starting location of an electric vehicle;
1[e]	receiving information indicative of a desired destination of the electric vehicle;
1[f]	receiving information indicative of a charging location of each of a plurality of electric charge providers;
1[g]	computing, based at least in part on the starting location, the desired destination, and the charging locations of one or more of the plurality of electric charge providers,
1[h]	a charging schedule for the electric vehicle the charging schedule comprising a scheduled start time and an indication of a scheduled stop time for charging the electric vehicle at each of one or more of the plurality of charging locations
1[i]	and a sequence defining an order in which the electric vehicle is to be charged at each of the one or more of the plurality of charging locations,
1[j]	wherein a first charging location of the sequence is computed based, at least in part, on an ability of the electric vehicle to travel to the first charging location utilizing a charge amount stored in a battery of the electric vehicle;
1[k]	displaying a charging status of the electric vehicle via a graphical user interface forming a part of the electric vehicle; and
1[l]	increasing, in accordance with the charging schedule, a level of charge of the battery of the electric vehicle;
1[m]	wherein the desired destination information is defined by a user of the electric vehicle via the graphical user interface adapted to display a vehicle charge indicator element comprising a first portion indicative of an amount of charge residing in a battery of the electric vehicle and a second portion indicative of an uncharged capacity of the battery of the

	electric vehicle and wherein the vehicle charge indicator element further comprises a slider by which an amount of charge may be specified.
Claim 2	
2[pre]	The electrical charging system of claim 1, wherein the instructions, when executed by the one or more processing devices, further result in:
2[a]	outputting, via the graphical user interface, the charging schedule.
Claim 3	
3[pre]	The electrical charging system of claim 1 wherein the instructions, when executed by the one or more processing devices, further result in:
3[a]	identifying, after the computing and based on the level of charge of the battery and an updated value descriptive of a distance to at least one charging location of at least one of the plurality of charging locations,
3[b]	that the level of charge of the battery cannot be increased in accordance with the charging schedule; and
3[c]	outputting, via the graphical user interface and in response to the identifying, an alert that the level of charge of the battery cannot be increased in accordance with the charging schedule.
Claim 4	
4[pre]	The electrical charging system of claim 1, wherein the instructions, when executed by the one or more processing devices, further result in:
4[a]	identifying, after computing the charging schedule, that the level of charge of the battery cannot be increased in accordance with the charging schedule; and
4[b]	outputting, via the graphical user interface and in response to the identifying, an alert that the level of charge of the battery cannot be increased in accordance with the charging schedule.
Claim 5	
5[pre]	The electrical charging system of claim 4, wherein the instructions, when executed by the one or more processing devices, further result in
5[a]	repeating the steps of receiving information indicative of a starting location of an electric vehicle,
5[b]	receiving information indicative of a desired destination of the electric vehicle,
5[c]	receiving information indicative of a charging location of each of a plurality of electric charge providers and computing a charging schedule.

Claim 6	
6[pre]	An electrical charging system, comprising:
6[a]	one or more processing devices; and
6[b]	a non-transitory memory device in communication with the one or more processing devices,
6[c]	the non-transitory memory storing instructions that when executed by the one or more processing devices, result in:
6[d]	receiving information indicative of a starting location of an electric vehicle;
6[e]	receiving information indicative of a desired destination of the electric vehicle;
6[f]	receiving information indicative of a charging location of each of a plurality of electric charge providers;
6[g]	computing, based at least in part on the starting location, the desired destination, and the charging locations of one or more of the plurality of electric charge providers,
6[h]	a charging schedule for the electric vehicle the charging schedule comprising a scheduled start time and an indication of a scheduled stop time for charging the electric vehicle at each of one or more of the plurality of charging locations,
6[i]	wherein a first charging location is computed based, at least in part, on an ability of the electric vehicle to travel to the first charging location utilizing a charge amount stored in a battery of the electric vehicle;
6[j]	displaying a charging status of the electric vehicle via a graphical user interface forming a part of the electric vehicle; and
6[k]	increasing, in accordance with the charging schedule, a level of charge of the battery of the electric vehicle;
6[l]	wherein the desired destination information is defined by a user of the electric vehicle via the graphical user interface adapted to display a vehicle charge indicator element comprising a first portion indicative of an amount of charge residing in a battery of the electric vehicle and a second portion indicative of an uncharged capacity of the battery of the electric vehicle and wherein the vehicle charge indicator element further comprises a slider by which an amount of charge may be specified.
Claim 7	
7[pre]	The electrical charging system of claim 6,
7[a]	wherein the instructions, when executed by the one or more processing devices, further result in:

7[b]	outputting, via the graphical user interface, the charging schedule.
Claim 8	
8[pre]	The electrical charging system of claim 6,
8[a]	wherein the instructions, when executed by the one or more processing devices, further result in:
8[b]	identifying, after the computing and based on the level of charge of the battery and an updated value descriptive of a distance to at least one charging location of at least one of the plurality of charging locations,
8[c]	that the level of charge of the battery cannot be increased in accordance with the charging schedule; and
8[d]	outputting, via the graphical user interface and in response to the identifying, an alert that the level of charge of the battery cannot be increased in accordance with the charging schedule.
Claim 9	
9[pre]	The electrical charging system of claim 6,
9[a]	wherein the instructions, when executed by the one or more processing devices, further result in:
9[b]	identifying, after computing the charging schedule, that the level of charge of the battery cannot be increased in accordance with the charging schedule; and
9[c]	outputting, via the graphical user interface and in response to the identifying, an alert that the level of charge of the battery cannot be increased in accordance with the charging schedule.
Claim 10	
10[pre]	The electrical charging system of claim 9,
10[a]	wherein the instructions, when executed by the one or more processing devices, further result in repeating the steps of receiving information indicative of a starting location of an electric vehicle,
10[b]	receiving information indicative of a desired destination of the electric vehicle,
10[c]	receiving information indicative of a charging location of each of a plurality of electric charge providers and computing a charging schedule.

I. INTRODUCTION

Charge Fusion Technologies, LLC, the owner of U.S. Patent No. 10,998,753 ("the '753 Patent"), submits this Preliminary Response to the Petition of Tesla, Inc., ("Tesla" or "Petitioner") challenging the validity of claims 1-10 the '753 Patent ("Challenged Claims").

The Board should deny institution of the Petition because Petitioner has not established a reasonable likelihood that it will prevail on its Ground as presented in the Petition. In particular, Petitioner fails to meet its burden to provide adequate explanation on the motivation to combine on any grounds, including reasonable expectation of success for combining U.S. Patent Application Publication 2008/0243331 ("Kato") (Ex. 1008) with U.S. Patent 7,671,567 ("Eberhard") (Ex. 1009) and the 2008 Tesla Roadster Touch Screen User Manual ("Tesla Manual") (Ex. 1005). Further, Petitioner fails to establish that the Tesla Manual qualifies as a printed publication. Moreover, the '753 Patent's provisional application (Ex. 1012) supports a priority date of July 11, 2008. Accordingly, "Eberhard" (Ex. 1009), which has a priority date of no earlier than January 16, 2009 (Pet. at 2), is not prior art to the '753 Patent.

Ground 1 further fails because Kato either alone or in combination with Eberhard and the Tesla Manual does not teach or render obvious:

> 1[f]/6[f]: receiving information indicative of a charging location of each of a plurality of electric charge providers;

1[m]/6[l] wherein the desired destination information is defined by a user of the electric vehicle via the graphical user interface adapted to display a vehicle charge indicator element comprising a first portion indicative of an amount of charge residing in a battery of the electric vehicle and a second portion indicative of an uncharged capacity of the battery of the electric vehicle and wherein the vehicle charge indicator element further comprises a slider by which an amount of charge may be specified.

For these reasons, Patent Owner respectfully submits that this Petition does not warrant institution.

II. THE '788 PATENT PRESENTS A NOVEL SYSTEM AND METHOD FOR ELECTRIC VEHICLE CHARGING AND POWER MANAGEMENT

The '753 Patent, entitled "Systems and Methods for Charging Electric Vehicles," was filed on September 4, 2020, issued on May 4, 2021, and claims priority to Provisional Application No. 61/134,646, which was filed on July 11, 2008. Ex. 1001 at 2. According to the '753 Patent, improvements in battery technology provided the potential for "economically viable" electric-powered modes of transportation. *Id*., 1:27-30. However, electric vehicles needed to be plugged in regularly to replenish their electrical charge, which "likely require[d] more time than is typically required to fill up an automobile with a petroleum based product." *Id*., 1:30-35. Because of this, "the owner of an electrical automobile must oftentimes adhere to a schedule of charging that renders the automobile unusable for protracted stretches of time," and there was "a resistance to performing the act of plugging in an automobile and subsequently unplugging the vehicle in order to

maintain a charged vehicle." *Id.*, 1:35-40. The applicants thus recognized that it would be advantageous to intelligently charge vehicles by creating a charging schedule. *Id.*, 2:5-15. Moreover, the applicants recognized the desire for a user to select the desired charge percent level via a slider on a graphical user interface. *Id.*, 14:50-53; Fig. 7.

Figure 7 is a block diagram which illustrates a graphical user interface slider allowing a user to select the desired charge (720).

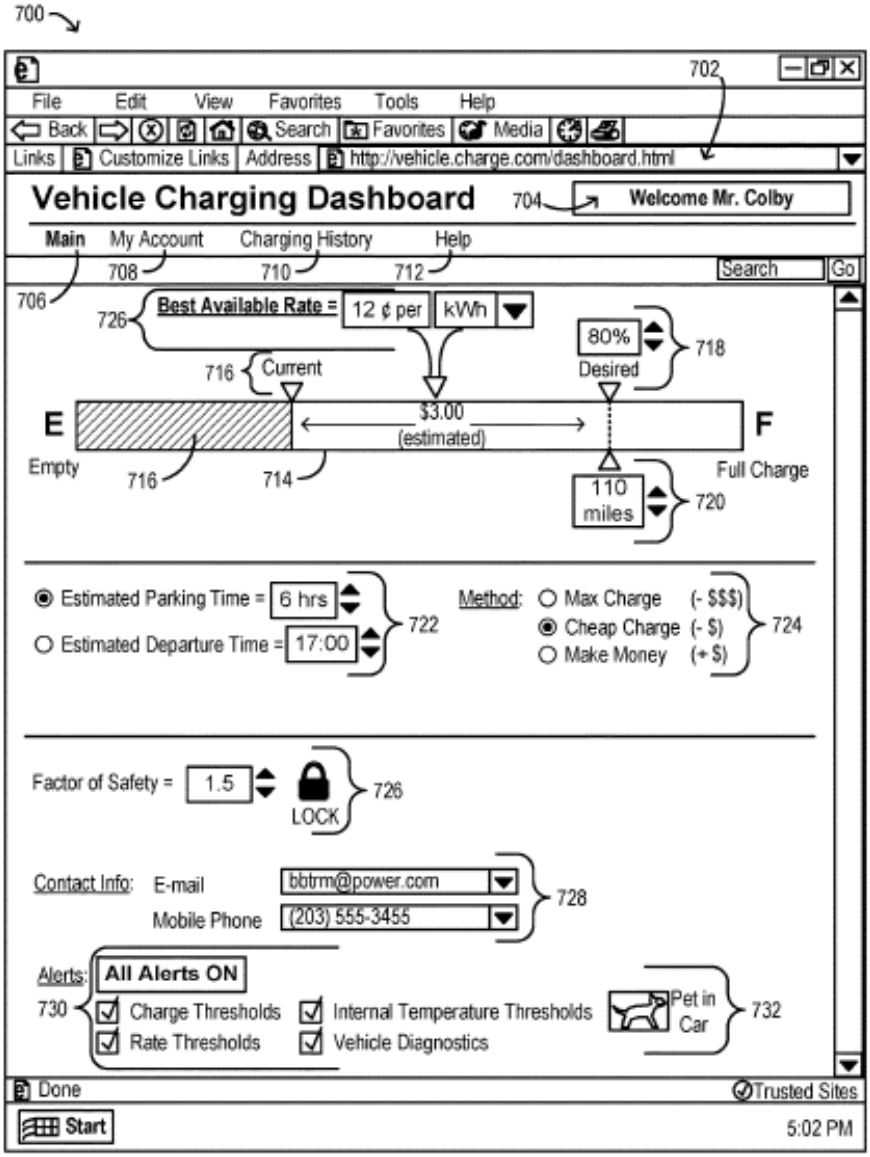

Ex. 1001, Fig 4; 14:54-64. According to the '753 Patent, a user may view and/or change the desired charge range level, and thus determine a desired distance to travel and accordingly set the desired charge range to match the desired distance. *Id.*

The Electrical Charging system, or ECS 440 may comprise various components such as a processor 446 and/or a data store 448 and one or more vehicle sensors 454. *Id*., 9:14-20. The vehicle 460 comprises a vehicle charge device 462, a vehicle data store 464, and/or a communication device 466. *Id*., 9:24-26. The '753 Patent teaches that the electric vehicle may charge in accordance with a charging schedule. *Id*., 16:46-66. In some embodiments, the charging schedule can account for how much energy or charge is desired by a user for the electric vehicle. *Id*.

III. OVERVIEW OF THE RELEVANT ALLEGED PRIOR ART

A. Kato (Exhibit 1008)

US Patent Application Publication 2008/0243331 ("Kato") is titled "Stop-Off Facility Guidance Systems, Methods, and Programs." The Application is directed to stop-off guidance systems that calculate a time required for vehicle maintenance at a predetermined facility, and calculate a total time required for vising the stop-off facility and returning to a predetermined facility on foot. Ex.

1008, Abstract.

As illustrated by Fig. 2 of Kato, Kato is directed to searching for a charging facility within a convenient traveling distance:

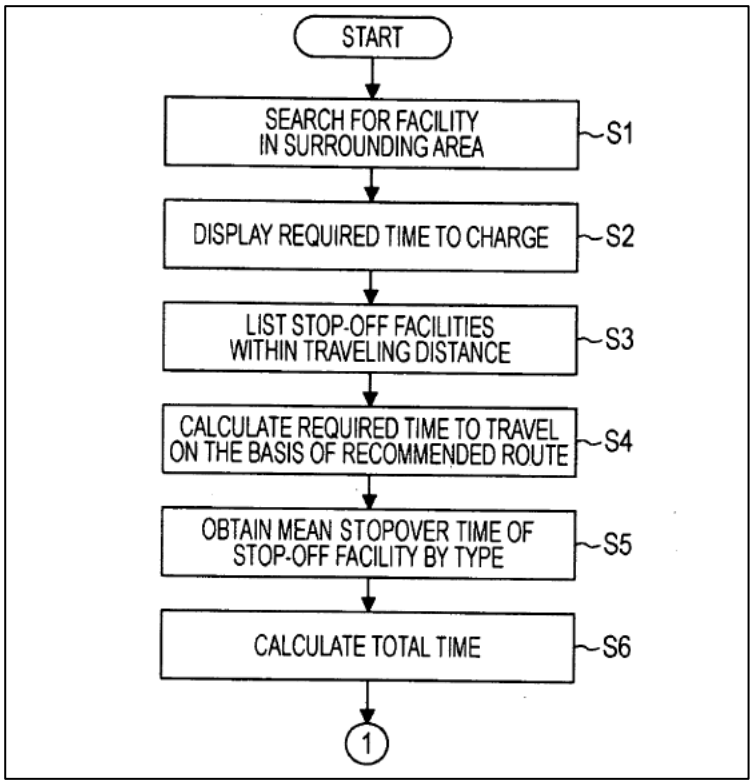

Ex. 1008, Fig. 2. Kato provides a user the ability to stop at convenient locations near sightseeing facilities while the user's car battery can be charged. Ex. 1008, ¶47; Claim 1. Kato provides a method upon which a user can create a destination schedule based upon search conditions entered by the driver, where the CPU 31 executes a search and provides a collection of routes from each starting point to each destination on the destination schedule. Ex. 1008, ¶¶48-50. Kato discloses a battery remaining amount, but does not disclose, teach or suggest the ability for a user to select a desired charge amount for the battery through the use of a slider

element. Ex. 1008, ¶¶57-59. Kato discloses charging a battery by plugging a vehicle into a power outlet, without any reference for selecting desired amount of charge. Ex. 1008, ¶22. In fact, Kato is not directed to improvements to an electric vehicle, but instead, Kato is directed to calculating the time for vehicle maintenance, and the amount of time for a user to visit a "stop-off" facility and return to a predetermined facility on foot. Ex. 1008, All Claims (a "stop off facility guidance" system and method). Kato's disclosure, which describes systems and methods for a stop-off guidance system, would not be improved by any charging/operation system.

B. Eberhard (Exhibit 1009)

United States Patent No. 7,671,567 ("Eberhard") is titled "Multi-Mode Charging System for an Electric Vehicle." Eberhard is directed to a method and apparatus that allows the end user to optimize the performance of an all-electric or hybrid vehicle and its charging system for a desired mode of operation. Ex. 1009, Abstract. As shown below, Eberhard is directed to setting a charging/operational mode based upon the consumer's expectations relative to performance, range,

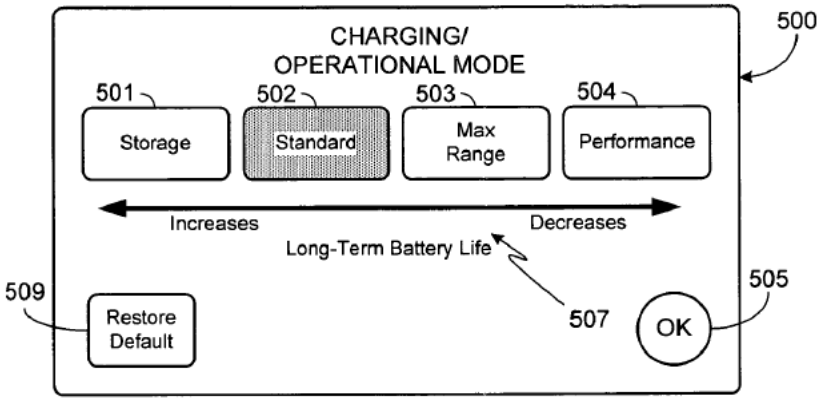

reliability, lifetime, and cost. Ex. 1009, 2:1-5; *See also* Ex. 1009, Fig. 5 (reproduced above).

Eberhard, as opposed to allowing users to select the desired amount of charge through a slider element on a graphical user interface, discloses "preferred modes of operation." Ex. 1009, 6:4-5. The disclosed modes are the standard mode, the storage mode, the extended driving range mode, and the performance mode. Ex. 1009, 6:6-7:3. These driving modes do not specify different amounts of charge, but instead correspond to different cut-off voltages and temperature ranges. Ex. 1009, Claim 1. Further, as shown below, Eberhard discloses methods to change the desired operational mode with a physical switch. Ex. 1009, 9:48-65; Fig. 7.

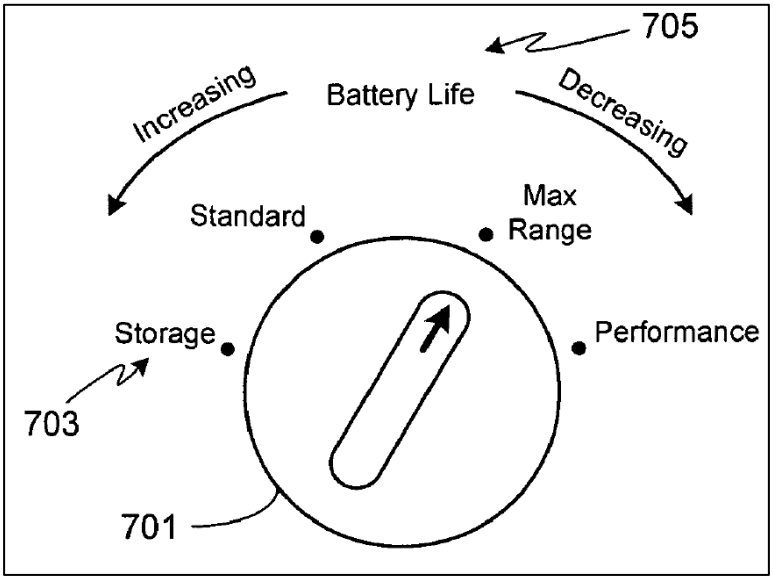

Ex. 1009, Fig. 7 (reproduced above).

C. Tesla Manual (Exhibit 1005)

The 2008 Tesla Roadster Touch Screen Users Manual ("Tesla Manual") is a manual which shows various settings for a user of the 2008 Tesla Roadster. Ex. 1005, 4. As shown below, the Tesla Manual provides instructions for different displays, such as clock, remaining battery range, energy usage, etc. Ex. 2005 at 5 (annotated) (reproduced below).

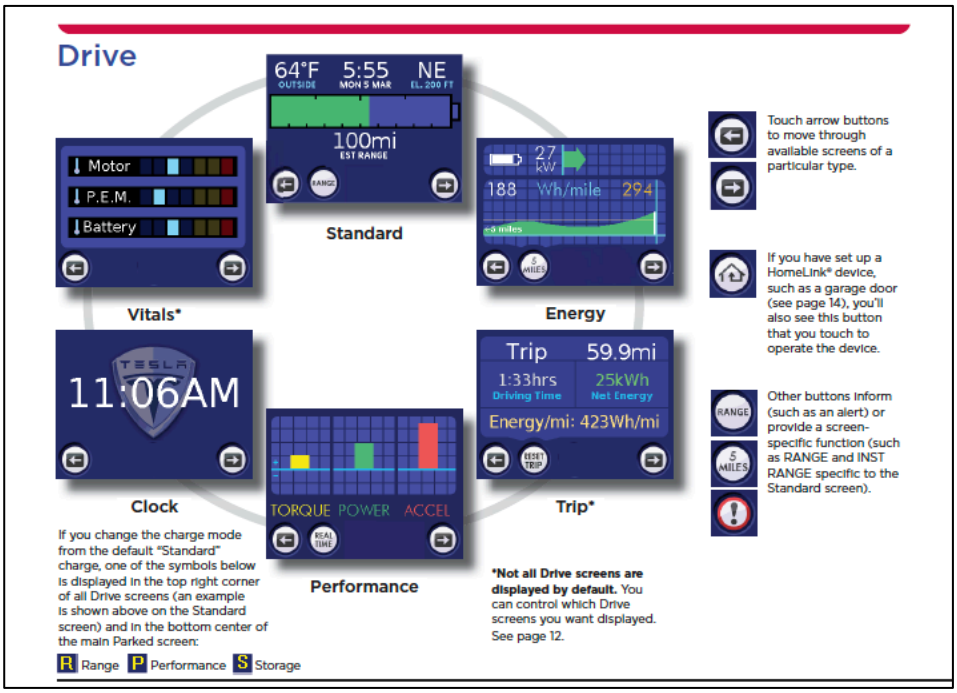

The Tesla Manual discloses a charge screen that shows the charge status of the battery. Ex. 2005 at 10 (reproduced below). As shown below, the Tesla Manual does not include any option to specify the amount of charge, and instead is designed to show charge status at the top left corner of the screen through different messages ("Charging," "Done Charging," "Topping Off Charge," "Recovering Charge," "Charge Pending," "Stopped Charging").

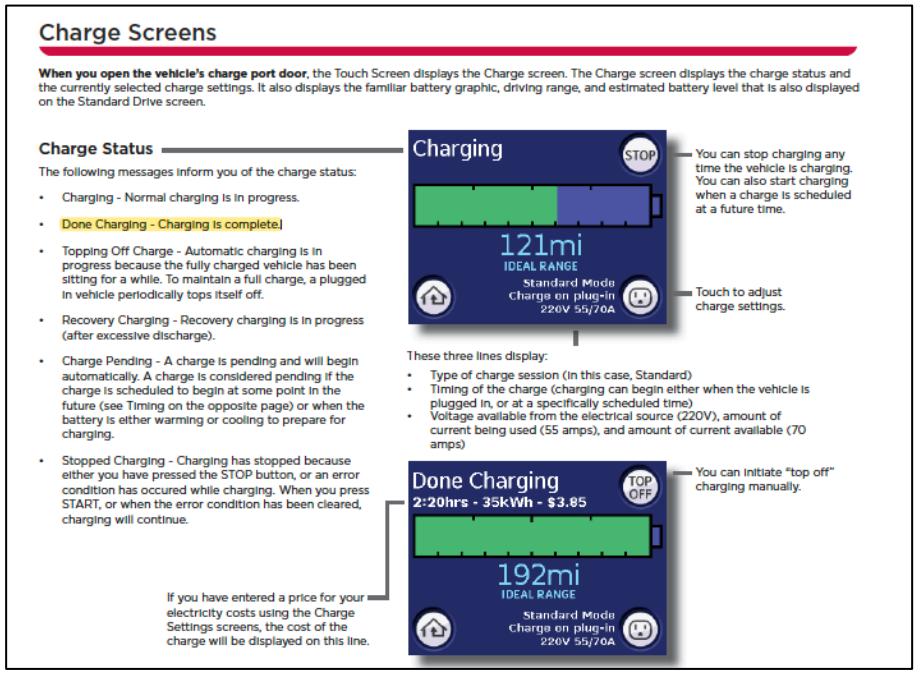

Charge Screens

When you open the vehicle's charge port door, the Touch Screen displays the Charge screen. The Charge screen displays the charge status and the currently selected charge settings. It also displays the familiar battery graphic, driving range, and estimated battery level that is also displayed on the Standard Drive screen.

Charge Status

The following messages inform you of the charge status:

- Charging - Normal charging is in progress.
- Done Charging - Charging is complete.
- Topping Off Charge - Automatic charging is in progress because the fully charged vehicle has been sitting for a while. To maintain a full charge, a plugged in vehicle periodically tops itself off.
- Recovery Charging - Recovery charging is in progress (after excessive discharge).
- Charge Pending - A charge is pending and will begin automatically. A charge is considered pending if the charge is scheduled to begin at some point in the future (see Timing on the opposite page) or when the battery is either warming or cooling to prepare for charging.
- Stopped Charging - Charging has stopped because either you have pressed the STOP button, or an error condition has occured while charging. When you press START, or when the error condition has been cleared, charging will continue.

Ex. 2005 at 10 (annotated) (reproduced above). As opposed to limiting the total amount of charge the battery can hold via user selection on a sliding scale, the Tesla Manual discloses that "you can limit the ***amount of current*** the vehicle draws" during charging, or the "Charge Mode" of the car, which adapts the battery to certain charge levels:

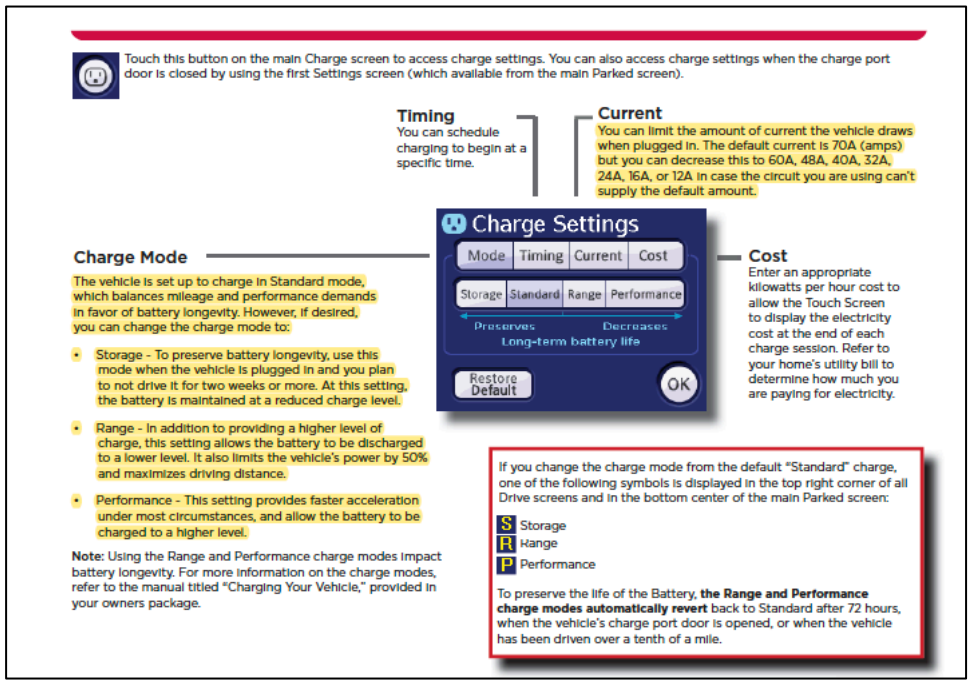

EX2005, 11 (annotated) (reproduced above).

IV. STANDARDS

A. Institution of an IPR

Under 35 U.S.C. § 314(a), Petitioner carries the burden of showing a reasonable likelihood that it would prevail with respect to at least one of the claims challenged in the Petition. Petitioner must prove unpatentability by a preponderance of the evidence. 35 U.S.C. § 316(e); *In re Magnum Oil Tools Int'l, Ltd.*, 829 F.3d 1364, 1375-77 (Fed. Cir. 2016).

A Petition cannot support institution unless it "identifies, in writing and with particularity, each claim challenged, the grounds on which the challenge to each claim is based, and the evidence that supports the grounds for the challenge to each claim." 35 U.S.C. § 312(a)(3). The Petition must explain "[h]ow the construed claim

is unpatentable" and "must specify where each element of the claim is found in the prior art patents or printed publications relied upon." 37 C.F.R. § 42.104(b)(4); *Google Inc. v. EveryMD.com LLC*, IPR2014-00347, Paper 9, at *9 (PTAB May 22, 2014). "The Board may exclude or give no weight to the evidence where a party has failed to state its relevance or to identify specific portions of the evidence that support the challenge." 37 C.F.R. § 42.104(b)(5).

B. Petitions Based on Obviousness

A petition based on obviousness (such as the instant one), which all grounds raised by Petitioner are, must "meaningfully" address the first two *Graham* factors: (i) the scope and content of the prior art, and (ii) any differences between the claimed subject matter and the prior art. *Graham v. John Deere Co. of Kansas City*, 383 U.S. 1, 17-18 (1966). It is not the Board's (or Patent Owner's) role to "sift through the information" provided with a petition to identify the differences between a challenged claim and the prior art. *Google*, IPR2014-00347 at *9. As part of that analysis, the Petition must show that a skilled artisan would have been motivated to combine the prior art references with a reasonable expectation of success. *Apotex Inc. v. Wyeth LLC*, IPR2014-00115, Paper 94, at *11 (PTAB Apr. 20, 2015) (citations omitted). An articulated reason with a rational underpinning to combine specific teachings in the references in a particular manner to arrive at the claimed invention is required for a showing of obviousness. *KSR Int'l Co. v. Teleflex, Inc.*,

550 U.S. 398, 418 (2007). Moreover, when an expert declaration is relied on to support such reasoning, the "[l]ack of factual support for expert opinion going to factual determinations . . . may render the testimony of little probative value in a validity determination." *Ashland Oil v. Delta Resins & Refractories*, 776 F.2d 281, 294 (Fed. Cir. 1985).

"The evaluation of the choices made by a skilled scientist, when such choices lead to the desired result, is a challenge to judicial understanding of how technical advance is achieved in the particular field of science or technology." *Abbott Labs. v. Sandoz, Inc.,* 544 F.3d 1341, 1352 (Fed. Cir. 2008). An obviousness inquiry based on an obvious-to-try rationale must always be undertaken in the context of the subject matter in question, "including the characteristics of the science or technology, its state of advance, the nature of the known choices, the specificity or generality of the prior art, and the predictability of results in the area of interest." *Id.*

To show that a particular design could have been obvious to try, Petitioner must present credible evidence to support its assertion that one of ordinary skill in the art would have understood that there are a limited number of possibilities for meeting a known design need. *See Bayer Schering Pharma AG v. Barr Labs., Inc.*, 575 F.3d 1341, 1347 (Fed. Cir. 2009) ("[A]n invention would not have been obvious to try when the inventor would have had to try all possibilities in a field unreduced by direction of the prior art."). In addition, "an invention is not obvious to try where

vague prior art does not guide an inventor toward a particular solution." *Bayer Schering Pharma AG v. Barr Lab'ys, Inc.*, 575 F.3d 1341, 1347 (Fed. Cir. 2009).

C. Claim Construction

In an *inter partes* review filed on or after November 13, 2018, claim terms are construed based on their ordinary and customary meaning. 37 C.F.R. § 42.100(b). Further, the Board should always construe claims to sustain their validity, if possible. *Phillips v. AWH Corp.*, 415 F.3d 1303, 1329 (Fed. Cir. 2005). The specification is the "best source for understanding a technical term," to be supplemented, "as needed, by the prosecution history." *Id.*, at 1315. For purposes of this paper, for all claim terms, Patent Owner requests that the Board adopt the ordinary and customary meaning of the claim terms as understood by one of ordinary skill in the art. If trial is instituted, however, and to the extent deemed necessary to resolve any dispute, Patent Owner reserves the right to propose more specific constructions of one or more claim terms.

V. PETITIONER'S PROPOSED OBVIOUSNESS CHALLENGES

Ground	'753 Patent Claims	Type	Reference
1	1-10	§ 103	Kato, Eberhard and Tesla Manual

VI. LEVEL OF ORDINARY SKILL IN THE ART

Factors that may be considered in determining the level of a person of ordinary skill in the art ("POSITA") include: (1) the type of problems encountered in the art;

(2) prior art solutions to those problems; (3) rapidity with which innovations are made; (4) sophistication of the technology; and (5) educational level of active workers in the field. *In re GPAC*, 57 F.3d 1573, 1579 (Fed. Cir. 1995) (citation omitted). Petitioner defines a POSITA as "an individual that has at least a bachelor's degree in electrical engineering, mechanical engineering, or physics (or an equivalent field) and at least two years of work experience involving automotive systems, including vehicle information systems, vehicle sensors, and vehicle controllers (ECUs)." Pet., Paper 2, 9; Ex. 1002, at ¶27. Petitioner further states that "more education can supplement the practical experience and vice versa." Pet., Paper 2, 9. Because the proposed level of ordinary skill does not affect the ultimate analysis, Patent Owner takes no position with respect to Petitioner's proposed level of ordinary skill in the art.

VII. GROUND 1: PETITIONER HAS FAILED TO ESTABLISH A REASONABLE LIKELIHOOD OF SUCCESS IN SHOWING KATO IN VIEW OF EBERHARD AND THE TESLA MANUAL RENDER ANY OF THE CHALLENGED CLAIMS (1-10) OBVIOUS

Petitioner relies almost exclusively on Kato to render obvious the challenged claims of the '753 Patent. Ex. 2001, ¶X. Petitioner then attempts to combine Kato, a publication directed to route planning, with Eberhard, a patent directed to battery improvements, along with a manual for a finished car that does not suggest anything other than a touchscreen. *Id.* As shown in reasons illustrated in detail below, Petitioner fails to show that Kato in view of Eberhard and the Tesla Manual renders

any of the Challenged Claims obvious and has not articulated any meaningful motivation to combine or a reasonable expectation of success. *Id.* Further, Petitioner's assertion that the Challenged Claims of the '753 Patent are not entitled to a priority date of July 11, 2008, is incorrect. *Id.* The '646 Provisional Application provides written description support for the Challenged Claims of the '753 Patent. *Id.* Moreover, Petitioner fails to establish that the Tesla Manual is a printed publication available to the public in 2008. *Id.* Accordingly, Ground 1 fails.

A. Petitioner has not articulated any meaningful motivation to combine or a reasonable expectation of success.

As the Federal Circuit and the Board have repeatedly confirmed, to assert obviousness by combining prior art references, a petitioner must prove that: (1) a motivation to combine the references exists; and (2) a POSITA would have had a reasonable expectation of success in combining the references. *See, e.g.*, *Samsung Elecs. Co., Ltd. v. Elm 3DS Innovations, LLC*, 925 F.3d 1373, 1380–81 (Fed. Cir. 2019) (upholding Board's finding of nonobviousness when Petitioner failed to present reasonable expectation of success); *Intelligent BioSystems*, 821 F.3d at 1367–68; *Johns Manville Corp. v. Knauf Insulation, Inc.*, IPR2018-00827, Paper 9, at 13 (P.T.A.B. Oct. 16, 2018) (denying institution where petition did not adequately support reasonable expectation of success); *Apotex Inc. v. Wyeth LLC*, IPR2014-00115, Paper 94 at 11 (P.T.A.B. Apr. 20, 2015) ("A party that petitions the Board for a determination of obviousness must show that 'a skilled artisan

would have been motivated to combine the teachings of the prior art references to achieve the claimed invention, and that the skilled artisan would have had reasonable expectation of success in doing so."). Petitioner has neither shown a motivation to combine nor a reasonable expectation of success.

1. Petitioner has not shown a motivation to combine Kato with Eberhard and the Tesla Manual

(a) Kato and Eberhard propose different solutions to different problems

Petitioner has not shown that a POSITA would have combined Kato and Eberhard and the Tesla Manual to arrive at the invention recited in the Challenged Claims because Kato and Eberhard propose different solutions to different problems. *See Broadcom Corp. v. Emulex Corp.*, 732 F.3d 1325, 1334 (Fed. Cir. 2013) ("While a prior art reference may support any finding apparent to a person of ordinary skill in the art, prior art references that address different problems may not, depending on the art and circumstances, support an inference that the skilled artisan would consult both of them simultaneously."); *Kinetic Concepts, Inc. v. Smith & Nephew, Inc.*, 688 F.3d 1342, 1366 (Fed. Cir. 2012) (finding invention nonobvious when none of the "reference[s] relate to the [problem] described in the patents" and no evidence was proffered "indicating why a person having ordinary skill in the art would combine the references"); *see also* Ex. 2001, Goldberg Decl., ¶¶ 81-93.

Kato describes its problem as when a driver travels to a maintenance facility,

the driver must wait a long time for the battery to charge. Ex. 1008, ¶5-7. Kato proposes that its solution is to allow drivers to be notified of stop-off facilities that can be visited by foot or other methods while the vehicle is charging. Ex. 1008, ¶16. On the other hand, Eberhard describes its problem as electric vehicle batteries being expensive and having a limited service life depending on factors such as rate of charge, charge level, level of discharge before charging, storage temperature, and temperature during use. *See* Ex. 1009, 1:30-64. Eberhard then proposes its solution as a system having different charging/operational modes to increase the service life of the battery. *See* Ex. 1009, 2:13-39.

Finding different stop-off facilities for a driver to visit during charging in Kato is fundamentally a different problem from electric vehicle rechargeable batteries having a limited service life. A POSITA looking to solve the problem of increasing the service life of a rechargeable battery would not look to a reference directed at finding stop-off facilities while waiting for charging.

Kato's solution to its problem is to provide for improvements to its navigation system to notify drivers of "stop-off facilities" that can be visited on foot during vehicle charging. *See* Ex. 1008, Claims 1-20. Kato is not even specifically directed towards improvements in battery capacity or charging of the battery. Instead, Kato explains that the charging of a battery in a vehicle is just one example of waiting while charging and describes "vehicle maintenance" as another example.

See Ex. 1008, ¶ 5. Thus, Kato is primarily directed towards improvements to a navigation apparatus, and does not teach, suggest or disclose any mention about the battery of an electric vehicle. *See generally* Ex. 1008, ¶¶ 29-97. Eberhard does not mention navigation other than saying that Eberhard's user interface can be used to provide the user with "navigation system controls." Ex. 1009, 9:1-3. As opposed to being a system directed at navigation or stop off facility guidance, Eberhard is directed at "a battery pack recharging system and user interface." Ex. 1009, 2:4-5. A POSITA would not look to Eberhard's solution directed towards "a method of setting a charging/operational mode of an electric vehicle" to improve on Kato's solution. *See e.g.*, Ex. 1009, 2:19-22, 2:35-37, 2:40-55, 2:62-64; Figs. 4 and 5, All Claims; *see also* Ex. 2001, Goldberg Decl., ¶¶81-93, N.B. ¶¶85-86.

Eberhard's solution to its problem is to provide the ability to set a charging/operation mode to storage, standard, max range, or performance mode. This solution would not improve or relate to Kato's stop-off based guidance system. Ex. 2001, Goldberg Decl., ¶¶81-93, N.B. ¶¶85-86. Similarly, a POSITA would not look towards Kato to improve Eberhard's method of setting charging/operation modes, as Kato is directed to allowing users to enjoy locations while the vehicle is charging. Ex. 2001, Goldberg Decl., ¶¶81-93, N.B. ¶¶85-86.

Furthermore, a POSITA would not look to Eberhard's charging/operation method to modify the navigational apparatus described in Kato, and then include

the specific Tesla Touch Screen purportedly disclosed in the Tesla Manual to arrive at the invention disclosed in the Challenged Claims. Ex. 2001, Goldberg Decl., ¶¶ ¶¶81-93; *see also Tennant Co. v. Oxygenator Water Techs., Inc.*, No. IPR2021-00625, 2021 WL 3709262, at *16 (P.T.A.B. Aug. 20, 2021) (stating, "mere demonstration that a reference may be analogous art is insufficient to show motivation to combine"); *KSR*, 550 U.S. at 418 ("[A] patent composed of several elements is not proved obvious merely by demonstrating that each of its elements was independently known in the prior art."); *Kinetic Techs., Inc. v. Skyworks Sols., Inc.*, No. IPR2014-00529, Paper 8, at 13-15 (P.T.A.B. Sep. 23, 2014). The Tesla Manual does not explicitly describe what problems it seeks to solve. But given that it appears to be an embodiment of the invention disclosed in Eberhard, it likely seeks to solve the same problem and provides the same solution as in Eberhard. Ex. 2001, Goldberg Decl., ¶89. A POSITA would have no motivation to combine the Tesla Manual with Kato in the same way the POSITA would not combine Eberhard with Kato.

(b) Petitioner's reason to combine lacks merit because it is based on hindsight reasoning that uses the claims as a roadmap to find the claim elements.

Petitioner relies on the Challenged Claims as a roadmap to its obviousness analysis, which violates the prohibition on hindsight reasoning to use the claims to find the claim elements. *See InTouch Techs., Inc. v. VGo Comm'ns., Inc.*, 751 F.3d

1327, 1351 (Fed. Cir. 2014) (reversing obviousness where "[i]t appears that [the expert] relied on the [] patent itself as her roadmap for putting what she referred to as pieces of a 'jigsaw puzzle' together."); *KSR Int'l Co. v. Teleflex Inc.*, 550 U.S. 398, 421 (2007) ("A factfinder should be aware, of course, of the distortion caused by hindsight bias and must be cautious of arguments reliant upon ex post reasoning."). Petitioner simply picks the claim elements from three disparate references—(1) Kato – directed towards allowing users to navigate to destinations on foot while their car is charging, (2) Eberhard – directed towards improving battery/operational conditions based upon the user's desired use for the vehicle, not the desired charge, and (3) the Tesla Manual – a manual for a particularized vehicle which Petitioner only uses to cite a touchscreen and a battery charge icon—and provides conclusory reasons why they should be combined. Pet., Paper 2, 33. Petitioner's list of reasons include: (1) that Kato and Eberhard both acknowledge issues related to optimization of rechargeable batteries (Pet. at 40); (2) Kato acknowledges that different batteries with different performance and battery materials can have different battery life (Pet. at 41); and (3) Kato, Eberhard, and the Tesla Manual are compatible as they "monitor charging conditions" that "include information about a vehicle's charge (Pet. at 42).

Petitioner's first reason that Kato and Eberhard both acknowledge issues related to optimization of rechargeable batteries is unavailing because although

Kato acknowledges the issues, it makes no effort to actually optimize the battery. *See* Pet. at 40. Kato's navigation apparatus calculates remaining SOC at a starting point (Ex. 1008, ¶55), calculates the time spent at a maintenance facility and the charging time (Ex. 1008, ¶56), and calculates the remaining battery amount after the charging (Ex. 1008, ¶¶57-58). Kato's system at best can sense the battery's charge and calculate SOC, but in no way is that optimization of the battery. *Id.*; *see* Ex. 1008, ¶¶54-59. It would be far more accurate to describe Kato as optimizing the driver's time to visit other stop-off locations while waiting for the vehicle battery to charge.

Petitioner's second reason that Kato acknowledges that different batteries with different performance and battery materials can have different battery life is equally unavailing. *See* Pet., Paper 2, 41. As just discussed, Kato monitors state of charge, but is not actually optimizing the battery. Ex. 2001, Goldberg Decl., ¶43. Therefore, even though Kato recognizes that there are different types of batteries with different battery life, it does not provide for optimizing its navigation based on the battery chemistry. If it did, it would first have to be able to detect the type of battery chemistry before it could even optimize for it. A POSITA would recognize that Kato is directed at navigation, and that Kato's disclosed SOC detection modified by neither Eberhard, nor the Tesla Manual benefits the goals of a system for providing stop-off guidance. *Id.*

Finally, Petitioner's third reason that Kato, Eberhard, and the Tesla Manual are compatible as they "monitor charging conditions" that "include information about a vehicle's charge" is also unconvincing. Although Kato monitors SOC, it never displays the actual SOC. It monitors the SOC to calculate charge time and how much of that time can be spent a stop-off location; it does not use that information to optimize charging. Eberhard and the Tesla Manual do monitor SOC to optimize charging, providing for a completely different technical solution.

Petitioner's reasons do not amount to what a POSITA ***would*** have done when reviewing Kato's navigation apparatus, but are conjecture on what is possible, which fails to meet the required burden. *Belden Inc. v. Berk-Tek LLC*, 805 F.3d 1064, 1073 (Fed. Cir. 2015) (concerns whether a skilled artisan not only could have made, but would have been motivated to make, the combinations or modifications of the prior art to arrive at the claimed invention); *Ruiz v. A.B. Chance Co*., 357 F.3d 1270, 1275-77 (Fed. Cir 2004) (forbidding "hindsight reasoning" that uses claims "as a roadmap to find its prior art components"); *In re Stepan Co*., 868 F.3d 1342, 1346 (Fed. Cir. 2017) (vacating a finding of obviousness, and explaining that, even when obviousness is based upon a single reference, the Office "must provide some rational underpinning explaining why a person of ordinary skill in the art would have arrived at the claimed invention"); *Abiomed, Inc. v. Maquet Cardiovascular, LLC*, IPR2017-01204, Paper 8, 11 (PTAB Oct. 23, 2017)

(rejecting a single reference ground due to a failure to demonstrate "sufficient rationale to combine the teachings").

Petitioner is silent as to why combining the Tesla Prior Art would be beneficial to Kato; this silence on the benefits of combining is fatal. *In re Nuvasive, Inc*., 842 F. 3d 1376, 1384 (Fed. Cir. 2016) (reversing finding of motivation to combine when there was no articulation as to why proposed modification would benefit a POSITA). More specifically, Petitioner is silent as to how the charging/operational modes that determine different cut-off voltages and operating temperatures ranges in Eberhard and the Tesla Manual would benefit Kato's navigation system. Kato's navigation system, which is the crux of Kato's system, is ignored. Further, the Petition identifies no problem in Kato that Eberhard and the Tesla Manual would be beneficial in solving. Instead, Petitioner latches onto Kato's tangential mention of its goal of "economical repeated use of the battery." *See* Pet. at 42.

2. Petitioner has not shown a reasonable expectation of success in reconfiguring Kato with Eberhard and the Tesla Manual.

The Petition lacks sufficient discussion or facts to support a reasonable expectation of success in reconfiguring Kato with Eberhard and the Tesla Manual to meet the limitations of the '753 Patent. Pet. at 43-46. Other than a conclusory statement that "all the necessary charging-related information and controls are already available on the electric vehicles, meaning a POSITA would have a

reasonable expectation of success in implementing this software change," Petitioner ignores this requirement in its entirety. Pet., Paper 2, 44.

Petitioner asserts that the proposed combination would be "obvious to try," because "a POSITA would have had good reason to pursue the known options within his or her technical grasp." Pet., Paper 2, 45; Ex. 1002, ¶140. However, Petitioner fails to address ***how*** one would reconfigure Kato's system—a navigation system that does not contemplate an electric vehicle with different operational modes or charging levels—to implement the Tesla Prior Art (Eberhard and Tesla Manual) as proposed by Petitioner. Instead, Petitioner, makes conclusory statements that the combination would be "predictable," because the use of Eberhard's slider coincides with markings on a drawing in the Tesla Manual. Pet. at 44-45.

Petitioner fails to address how the reconfigured Kato navigational apparatus would work. Do the stop-off facilities provided by the algorithm change depend on the operational mode selected in Eberhard? Does the "traveling distance" listed in Kato change depend on the operational mode in Eberhard? As shown below in Figure 2 of Kato and Figure 5 of Eberhard, does the mode of Eberhard's Figure 5 that purportedly impacts battery life change the: (1) time to charge; (2) stop-off facilities listed; and (3) time to travel as listed in Kato's Figure 2?

FIG. 2

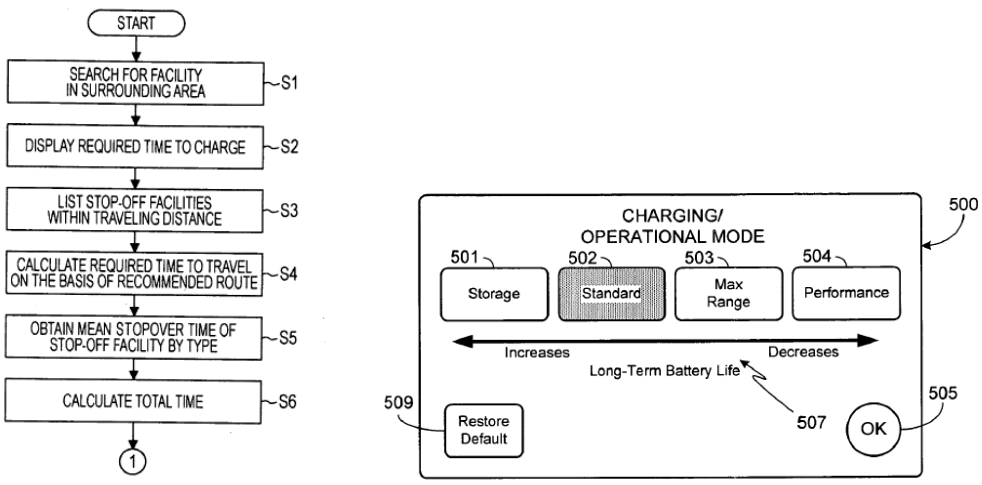

Moreover, why does a POSITA looking at the navigational apparatus of Kato have a motivation to purportedly improve the long-term battery life, as shown in Eberhard's Figure 5. As opposed to addressing these points, Petitioner resorts to skipping the requirements for reasonable expectation of success and cites vague similarities between the references, which is impermissible. *See Apple Inc. v. California Inst. Of Tech.*, No. IPR2017-00219, 2018 WL 6828780, at *6 (P.T.A.B. Dec. 27, 2018) (finding "Petitioner's argument and evidence regarding research motivating the combination to be vague and not supported adequately by the declarant testimony" where there was no arguments or evidence that explains how the reference "supports its contention about how or why a person of ordinary skill in the art would have modified or combined the [references at the time of the patent]").

Petitioner also fails to show how to reconfigure Kato to function with

Eberhard where Kato does not show a state of charge. Petitioner asserts that Kato's time left to charge is a proxy for the current state of charge relative to maximum battery capacity. Pet., Paper 2, 34. But that is unpersuasive because a full charge does not always correlate to maximum battery capacity, which depends on the set charging mode. *See supra*, Section III.C; Ex. 2001, Goldberg Decl., ¶90. Further, assuming a driver wants to get a partial 25% charge instead of a full charge; the indicator in Figure 6 of Kato then completely fails as a proxy for the current state of charge. Ex. 2001, Goldberg Decl., ¶90. Alternatively, different current levels at different charging locations can cause charging time to increase or decrease. *Id.* Different charging locations may have different charge speeds based upon resources and balancing of available electrical output, thus speeding or slowing charge times. *Id.* Moreover, the time to charge may be different then because of the different current and thus no longer indicative of the state of charge. *Id.* There are many variables as to why the time to charge does not directly correlate to battery capacity and thus cannot be a proxy for state of charge. *Id.*

As the Board and Federal Circuit have noted, Petitioner's apparent assumption of success is insufficient. *KEYnetik, Inc. v. Samsung Elecs. Co., Ltd.*, No. 2020-1271, 2021 WL 274723, *6–7 (Fed. Cir. Jan. 27, 2021) (vacating the Board's finding of reasonable expectation of success for certain claims because the Board erred in failing to impose on the petitioner the burden of establishing a

reasonable expectation of success in combining references) (citing *Arctic Cat Inc. v. Bombardier Recreational Prod. Inc.*, 876 F.3d 1350, 1360–61 (Fed. Cir. 2017)); *Takeda Pharm. Co. Ltd. v. Torrent Pharms. Ltd.*, No. 2020-1552, 2021 WL 560763, *1–3 (Fed. Cir. Feb. 16, 2021) (affirming nonobviousness and stating "[w]hile motivation and reasonable expectation of success need not be expressly disclosed by the prior art itself and may instead come from the background knowledge of the skilled artisan, merely asserting that a given modification would have been obvious to a skilled artisan does not make it so").

Without any evidence establishing otherwise, the Board cannot simply assume that Kato's navigational apparatus can easily be reconfigured to utilize the purported battery charging of Eberhard and the Tesla Manual. Petitioner and its expert fail to put forward any evidence to demonstrate how this proposed reconfiguration or combination would work together in the manner described in the Challenged Claims. Accordingly, the Petition fails. *See Samsung Elecs.*, 925F.3d at 1380–81 (upholding Board's finding of nonobviousness when Petitioner failed to present evidence of reasonable expectation of success)

B. The '646 Provisional provides written description support and the claims have a priority date of July 11, 2008, thus Eberhard and the 2008 Tesla Roadster Touch Screen Users Manual are not prior art.

1. The '646 Provisional supports the "vehicle charge indicator" element

Petitioner's contention that the '646 Provisional does not provide written

support is incorrect because Petitioner relies on an unduly narrow reading of the '646 Provisional. More specifically, Petitioner contends that the '646 Provision fails to provide support because "Indeed, the word 'slider' never appears in the application, nor is there a discussion of a 'charge indicator' indicating 'an amount of charge residing in the battery' and 'an uncharged capacity of the battery.'" Pet., Paper 2, 15. But a provisional application need not use the exact same terminology as the challenged claims. *See Blue Calypso, LLC v. Groupon, Inc.*, 815 F.3d 1331, 1345 (Fed. Cir. 2016) ("[W]hen examining the written description for support for the claimed invention, we have held that the exact terms appearing in the claim 'need not be used *in haec verba*.'"). The provisional application "need not describe the claimed subject matter in precisely the same terms as found in the claims at issue." *Tech. Licensing Corp. v. Videotek, Inc.*, 545 F.3d 1316, 1331-32 (Fed. Cir. 2008) (internal quotation marks and brackets omitted, citing *inter alia Lockwood v. Am. Airlines, Inc.*, 107 F.3d 1565, 1572 (Fed. Cir. 1997)).

The specification describes the vehicle charge indicator element, but in the context of the purpose of the invention and a system embodying that purpose. A specification can provide sufficient written description support when describing the purpose of the invention and a non-limiting embodiment to serve that purpose. *See Scriptpro, LLC v. Innovation Assoc., Inc.*, 762 F.3d 1355, 1359-60 (Fed. Cir. 2014). As an initial matter, in reciting the "vehicle charge indicator" as a claim element in

its petition, Petitioner failed to recite the entire claim element. *See* Pet., Paper 2, 13. The immediately preceding recitation, beginning from the wherein term, is an integral part of the claim element: "wherein the desired destination information is defined by a user of the electric vehicle via the graphical user interface adapted to display a vehicle charge indicator …." *See* Ex. 1001, 29:48-51. This recitation places the entire claim element in the context of its purpose and the system for performing that purpose—the graphical user interface. Ex. 2001, ¶X. The '646 Provisional describes this purpose and system in the embodiment[1] of an automobile dashboard based interface for a user to enter and set the desired charge level required for a destination (Ex. 2001, ¶X):

> The user may also have specified that the automobile needs to be 80% charged at the end of eight hours. In some embodiments , the user may indicate a desired charging level (and/or a desired charging level may be automatically calculated) based on desired distance of travel.
>
> …
>
> In the above example, the information may be entered into a central server for retrieval by the electrical charging system (ECS) (comprising the sensor and means for electrical charging), such as via a web page configuration page accessible by the driver or entered into the automobile such as via a dashboard based interface.

Ex. 1012, '646 Provisional, 10-11. The vehicle charge indicator element does not lack written description support just because the claims recite a vehicle charge

[1] The description in '646 Provisional of "In the above example …" clarifies that what is being described is only one particular embodiment of the entering of a desired charge level through an automobile dashboard based interface.

indicator in a general graphical user interface instead of a specific dashboard based interface to access a web page configuration page for a user to define the charge level based on the destination. *See Scriptpro, LLC*, 762 F.3d 1355, 1359-60 (holding that a specification describing the purpose of an invention in the context of a particular non-limiting embodiment to perform the purpose does not lack written description support); *see also* Ex. 2001, ¶X.

The vehicle charge indicator element, more specifically the recitation of "a first portion indicative of an amount of charge residing in a battery of the electric vehicle and a second portion indicative of an uncharged capacity of the battery of the electric vehicle" also does not lack written description support because a person of ordinary skill in the art understands the '646 Provisional to disclose it. Ex. 2001, ¶XX. The '646 Provisional states that a desired charging level based on destination can be entered into the system by well-known GUI methods such as that in an iPhone interface:

> Any other well known method incorporating a graphical user interface (GUI) may be employed to enter data into the automobile based memory or server. For example, an iPhone interface may communicate via Bluetooth with a memory device and processor resident in the automobile to make and/or change parameter selections.

Ex. 1012, '646 Provisional, 11. A person of skill in the art would understand the battery gauge of the iPhone interface with one part filled (white) and one part unfilled (black) to be one possible interface design to implement the claimed "a

first portion indicative of an amount of charge residing in a battery of the electric vehicle and a second portion indicative of an uncharged capacity of the battery of the electric vehicle." Ex. 2001, ¶XX.

Ex. 2001, at ¶XX. (https://www.iphonelife.com/content/evolution-iphone-every-model-2007-2016) (annotated) (reproduced above).

2. The '646 Provisional supports the "slider" element

A person of ordinary skill in the art would also understand that the '646 Provisional's citation to the iPhone interface supports the slider element because the slider was a design element in the graphical user interface of the iPhone by 2007. A slider was used in the graphical user interface of the iPhone released on June 29, 2007, for a user to specify the amount of volume when playing music files.

Ex. 2001, Goldberg Decl., ¶68; EX2006.

Ex. 2001, Goldberg Decl., ¶68; EX2006.

Even Petitioner concurs that the slider element is a GUI input method in the iPhone interface known to a POSITA. *See* Pet., Paper 2, 37-38. Petitioner cites to the '646 Provisional's disclosure of "Any other well known method incorporating a graphical user interface (GUI) may be employed to enter data into the automobile based memory or server. For example, an iPhone interface may communicate via Bluetooth with a memory device and processor resident in the automobile to make and/or change parameter selections" in support of its assertion that a POSITA would modify Eberhard 's slide switches into a slider element. *Id.* at 38 (citing the equivalent disclosure in the '753 Patent specification). Thus, a POSITA seeing a

recitation to the iPhone interface in the ’646 Provisional would understand it to support the slider element.

3. The ’646 Provisional supports the “computing a charging schedule” element

Contrary to the Petitioner’s assertion, the ’646 Provisional supports each element of the “computing a charge schedule” even though it does not recite the claim element verbatim. The ’646 Provisional describes the computation of a charging schedule in the form of multiple specific examples.

The ’646 Provisional supports the “based at least in part on the starting location, the desired destination, and the charging locations of one or more of the plurality of electric charge providers.” The ’646 Provisional describes a driver driving from home (starting location) to his place of work (desired destination). Ex. 1012, 11; Ex. 2001, Goldberg Decl., ¶76. The ’646 Provisional describes electrical charging system locations such as a vehicle/charging facility and a space at work, both having ECSs (charging locations of one or more of the plurality of electric charge providers). Ex. 1012, 11; Ex. 2001, Goldberg Decl., ¶¶75-79.

The ’646 Provisional supports “a charging schedule for the electric vehicle the charging schedule comprising a scheduled start time and an indication of a scheduled stop time for charging the electric vehicle.” Ex. 1012, 11; Ex. 2001, Goldberg Decl., ¶X. The ’646 Provisional describes a driver parking his car in a parking space with a ECS at work and knowing the car will be sitting in the space

throughout the workday for eight hours (scheduled start time and scheduled stop time for charging). Ex. 1012, 11; Ex. 2001, Goldberg Decl., ¶¶75-79.

The ’646 Provisional supports “at each of one or more of the plurality of charging locations and a sequence defining an order in which the electric vehicle is to be charged at each of the one or more of the plurality of charging locations.” The ’646 Provisional describes being at a certain charged level after traveling 20 miles to the vehicle charging facility. Ex. 1012, 11; Ex. 2001, Goldberg Decl., ¶¶75-79. It also describes charging for three hours at work so it can be at a minimum charge of 80%. It also describes that when charging at the ECS at work, the system relies on other retrieved information specifying the charging characteristic of the automobile to compute the 3-hour charge to 80%. Ex. 1012, 11; Ex. 2001, Goldberg Decl., ¶¶75-79. A POSITA would understand that this describes charging at the vehicle facility first then at work (the sequence defining an order of charging).

Finally, the ’646 Provisional supports “wherein a first charging location of the sequence is computed based, at least in part, on an ability of the electric vehicle to travel to the first charging location utilizing a charge amount stored in a battery of the electric vehicle.” The ’646 Provisional describes the driver desiring a certain charge level after traveling 20 miles to the vehicle charging facility from home. A POSITA would understand that that this means the system is making the calculation based on the amount stored in the battery (at the starting location) and the amount

remaining (at the first charging location, the vehicle charging facility) after traveling 20 miles.

C. Petitioner fails to establish that the 2008 Tesla Roadster Touch Screen Users Manual is a printed publication

There is no presumption for finding a reference to be a printed publication, including when determining institution for an *inter partes* review. *Hulu, LLC v. Sound View Innovations, LLC*, No. IPR2018-01039, 2019 WL 7000067, at *5 (P.T.A.B. Dec. 20, 2019) (precedential). "Whether a reference qualifies as a 'printed publication' is a legal conclusion based on underlying factual findings." *Nobel Biocare Servs. AG v. Instradent USA*, Inc., 903 F.3d 1365, 1375 (Fed. Cir. 2018). Public accessibility is "the touchstone in determining whether a reference constitutes a printed publication." *Blue Calypso, LLC v. Groupon, Inc*., 815 F.3d 1331, 1348 (Fed. Cir. 2016) (internal quotation omitted). At the institution stage, an IPR petitioner must identify, with particularity, evidence sufficient to establish a reasonable likelihood that the reference was publicly accessible before the critical date of the challenged patent and therefore that there is a reasonable likelihood that it qualifies as a printed publication. *Id.* "This standard is far more than is required in typical notice pleading, which only requires that a party make plausible claims." *Id.*

Petitioner fails to establish a reasonable likelihood that the Tesla Roadster Touch Screen Users Manual qualifies as a printed publication. First, Petitioner

provides insufficient evidence that the Tesla Manual is a conventional publication. Second, Petitioner provides insufficient evidence that the Tesla Manual was ever publicly accessible. Third, Petitioner's declarant, Ms. Lis Fraser, submitted a declaration that directly contradicts her other recent declarations, calling into question whether Ms. Fraser has personal knowledge of the facts allegedly supporting Petitioner's claim of public accessibility and whether those facts are even true. Fourth, even if the facts Petitioner alleges are true, Petitioner has not shown that the standard for public accessibility—that a person of ordinary skill in the art could access the reference—is met.

1. No indicia on the face of the Tesla Manual that it was a conventional publication

Petitioner's statement that the Tesla Manual was "published in the first quarter of 2008" is misleading. *See* Pet., Paper 2, 8. Indicia on the face of reference is considered in determining if it is a convention publication. *See Hulu*, 2019 WL 7000067, at *7. Indicia on the face of a reference can include a copyright date, edition identifiers, publication by a commercial publisher, and the assignment of an ISBN number. *See Hulu*, 2019 WL 7000067, at *7. But the only indicia on the face of the Tesla Manual evidencing that it is a conventional publication is the 2008 copyright notice date—otherwise it bears none of the markers of conventional publication. *See* Ex. 1005. There is no edition identifier, no indication it was ever published by a commercial publisher, and no assigned ISBN number. Thus, the

Tesla Manual was never published in the sense of a conventional publication as Petitioner claims.

2. Lack of evidence that the Tesla Manual was publicly accessible when there is no corroborating metadata of publication on Tesla's website, no declaration from the Internet Archive, and no declaration from an expert that it is prior art.

The Board, in the *Hulu* decision, found that a user's manual was publicly accessible when it was "supported with a copyright notice, metadata information from the reference on the company's website, the release date of the printed version, a declaration from the office manager of the Internet Archive, and a declaration from an expert stating that she located and obtained a copy of the reference before the patent's filing date …." *Hulu*, 2019 WL 7000067, at *7 (citing *Syncro Soft SRL v. Altova Gmbh*, IPR2018-00660, Paper 6 at 8–10 (PTAB Sept. 5, 2018)). Petitioner cites this same institution decision in support but has only presented evidence for one of the five factors for public accessibility in *Syncro Soft SRL*. *See* Pet., Paper 2, 8. Petitioner fails to submit any metadata information on the Tesla Manual from the Tesla website, even though that metadata is directly accessible to Petitioner because Petitioner controls both the Tesla Manual and its own website. Petitioner also did not provide a declaration from the office manager of the Internet Archive that the Tesla Manual was available on its website as of its alleged publication in the first quarter of 2008. Finally, Petitioner's expert did not submit

a declaration as to the Tesla Manual's actual release date prior to the '753 Patent's priority date. *See* Ex. 1002, at ¶58; *see* Ex. 1010, at ¶5-6. In fact, Petitioner's expert provides no independent declaration of a release date before the '753 Patent priority date and merely relies on the declaration of Petitioner's declarant Ms. Lis Fraser. *See* Ex. 1002, at ¶58. But Petitioner's declarant, Ms. Lis Fraser's also does not provide an actual release date, only an approximate timing in the "first quarter of 2008." *See* Pet., Paper 2, 8; *see also* Ex. 1010 at ¶6. The actual release date is critical given the '753 patent's priority date of July 11, 2008, the Tesla Manual's general 2008 copyright date, and the issue of whether Ms. Fraser's alleged facts supporting public accessibility are true (*see infra*, Section VII.E.3.).

3. It is questionable whether Petitioner's declarant was a Tesla employee at the 2008 time period in question and whether she has personal knowledge of the alleged facts supporting public accessibility

Ms. Lis Fraser, Petitioner's declarant, submitted a declaration that she has been a Tesla employee since 2007, directly contradicting three of her own declarations in three separate United States district court cases where she declared that she has only been a Tesla employee since 2014. *Compare* Ex. 1010 at ¶¶1, 2 *with* Ex. 2002, Ex. 2003, and Ex. 2004. This calls into question whether Ms. Fraser truly has personal knowledge of the alleged facts supporting publication and public accessibility. It also calls into question whether those facts are even true.

Ms. Lis Fraser declares in her July 14, 2022, declaration in support of this

petition that she has "personal knowledge of the facts contained herein" and that she has "been employed at Tesla, Inc. since 2007." Ex. 1010 at ¶¶1, 2. This is not the first time Ms. Lis Fraser made a declaration on Tesla's behalf; she submitted declarations in at least three separate cases in the U.S. District Court for the Central District of California and the District of Hawaii. Ex. 2002; Ex. 2003; Ex. 2004. In those declarations, Ms. Fraser stated to the effect that she has only been employed at Tesla since around approximately 2013 or 2014.[2] Ms. Fraser's current declaration that she has been employed at Tesla since 2007 thus stands in direct contradiction to her other three declarations. The previous three declarations call into question whether Ms. Fraser was in fact an employee of Tesla during the 2008 period in question and has personal knowledge of the alleged publication and public accessibility facts in her current declaration. Due to this uncertainty, Petitioner has not met its burden to establish public accessibility.

4. Even if the alleged fact that approximately 100 Tesla Manual were shipped to customers is true, that does not meet the standard for public accessibility because the Tesla Manual was too expensive for a POSITA to access.

Finally, the facts declared as supporting public accessibility, even if true, do

[2] Ex. 2002 at 2 (Fraser declaration dated January 17, 2020 stating that "I am a Senior Staff Technical Writer at Tesla, Inc. ("Tesla"), where I have been employed for a little more than 6 years."); Ex. 2003 at 2 (Fraser declaration dated July 1, 2021 stating that "I am a Senior Staff Technical Writer at Tesla, Inc. ("Tesla"), where I have been employed for a little more than 8 years."; Ex. 2004 at 2 (Fraser declaration dated February 10, 2022 stating that "I am a Senior Staff Technical Writer at Tesla, Inc. ("Tesla"), where I have been employed for more than 8 years.").

not establish that a person of ordinary skill in the art could reasonably have accessed the Tesla Manual when only hard copies were distributed to approximately 100 customers. "A reference is considered publicly accessible upon a satisfactory showing that such document has been disseminated or otherwise made available to the extent that persons interested and ordinarily skilled in the subject matter or art, exercising reasonable diligence, can locate it." *Jazz Pharms., Inc. v. Amneal Pharms.*, LLC, 895 F.3d 1347, 1355 (Fed. Cir. 2018). In determining whether interested persons could have accessed the publication, factors considered include the expertise of the target audience, the avenues of distribution, the duration of dissemination, and expectations of confidentiality or restrictions on recipients' sharing of the information. *Centripetal Networks, Inc. v. Cisco Sys., Inc.*, 847 F. App'x 869, 877 (Fed. Cir.), cert. denied, 211 L. Ed. 2d 106, 142 S. Ct. 240 (2021).

As to the first factor of the expertise of the target audience, the approximately 100 Tesla Manuals were distributed solely in hard copy to Tesla Roadster customers. The PTAB has found that an owner's manual was not a printed publication where it was shipped to four customers as part of various purchases of related systems. *Vmac Global Technologies Inc.*, Case IPR2018-00670, Paper 9 at 13-14 (internal citations omitted). In order to even access this Tesla Manual, a customer would have to pay in nearly $100,000 in 2008, when the Tesla Roadster had a purchase price starting at $98,000. Ex. 2005. The manual was not published

electronically so that it was available on a publicly available site. Accordingly, the Tesla Manual could not be downloaded by anyone interested, but instead, only available to those with the means to pay the substantial accessibility fee. Such a barrier to entry does not meet the test that requires that "*persons interested and ordinarily skilled in the subject matter or art exercising reasonable diligence, can locate it*." *Hulu*, IPR2018-01039, Paper 29 at 10-11 (emphasis added).

The high barrier to entry of $109,000 here is similar to the Board's decision denying institution in *ASM IP Holding B.V. v. Kokusai Elec. Corp.*, IPR2019-00369, Paper 8 at 15-16 (PTAB June 27, 2019). In *ASM*, the petitioner argued that a manual qualified as prior art because "'[c]ustomers purchasing the P-20H were given copies of [the manual],' that additional copies were made available to such 'customers of the product upon their request,' and that those customers 'were interested persons and persons of ordinary skill in the art.'" *Id.* at 14. The petitioner further argued that Tencor's website allowed website users to request more information about the manual and that the manual was not marked confidential. *Id.* The petitioner further pointed to an article mentioning the product as evidence that people were aware of the product. *Id.* at 14-15.

But the Board rejected these arguments and found that the manual was not publicly accessible where it cost $65,000 to purchase the product before being able to access the manual. *See id.* at 16. The Board explained "there is no evidence

of such dissemination to 'persons interested and ordinarily skilled in the subject matter or art,' such as potential or non-customers." *Id.* at 17. The Board noted that "it is not readily apparent from Petitioner's evidence whether a given website user would have even known about, much less been able to successfully request, the *particular* document before us …." *Id.* at 18. The Board also stated that "the presence of a 'copyright notice' … weighs against a finding Tencor was publicly accessible." *Id.* at 19. To the Board, the $65,000 cost of the product "weigh[ed] heavily against finding that the Tencor Operations Manual was 'publicly accessible.'" *Id.* at 18 ("Providing Tencor only to those individuals that are able to purchase a product at such high expense significantly diminishes Tencor's accessibility to the general public interest in this art.").

Petitioner fails to address why a manual was publicly disseminated to interested persons having ordinary skill in the art when it that was only distributed to a select group of 100 people that were likely not POSITAs. In fact, Petitioner's expert states, a POSITA would have had at least a bachelor's degree in electrical or mechanical engineering (or an equivalent field) and at least two years of work experience involving automotive systems, including vehicle information systems, vehicle sensors, and vehicle controllers (ECUs). Ex. 1002, ¶27. And Petitioner's own declarant states that the manual was delivered to customers, and only customers of the first 100 Tesla Roadsters. *See* Exhibit 1010, ¶6. Tesla has not

advanced any evidence that the 100 customers meet the standard for a person of ordinary skill in the art.

The second factor of avenues of distribution similarly supports a finding of no public accessibility. The Tesla Manual had a narrow avenue of distribution—the 100 customers of Tesla Roadsters. It was neither published on Petitioner's website for the public to download and access, nor was it made available through any other means of distribution. Ex. 2001, Goldberg Decl., ¶80. This is in stark contrast to other more distributive means such as a trade show. *See GoPro, Inc. v. Contour IP Holding LLC*, 908 F.3d 690, 694–95 (Fed. Cir. 2018).

The third factor of duration of dissemination is likely inapplicable in this circumstance because it applies as a proxy to the number of individuals that would be exposed to the reference if it was placed on display at a trade show. *See Centripetal Networks*, 847 F. App'x at 877. But alternatively, if considered from the perspective of how many people could reasonably have had access, the number is the 100, and no larger.

Under the fourth factor of expectations of confidentiality or restrictions on recipients' sharing of the information, this factor also supports a finding of no public accessibility because the Tesla Manual explicitly restricts sharing without Tesla's authorization. The Board found public accessibility under this factor, and was affirmed by the Federal Circuit, when a user manual explicitly stated that users

are permitted to "use, print out, save on a retrieval system, and otherwise copy and distribute the reference for noncommercial use." *See Centripetal Networks*, 847 F. App'x at 877. The Board denied institution when a manual was shipped to four customers with a copyright notice stating that "it was not to be reproduced 'in any form' by the customers absent 'the express written permission of VMAC.'" *VMAC Global Tech. Inc. v. Vanair Man., Inc.*, IPR2018-00670, Paper 9 at 13 (PTAB Aug. 10, 2018). The Board determined that the petitioner "failed to provide a threshold showing that the VMAC Owner's Manual was publicly accessible as a 'printed publication' prior to the critical date." *Id.* at 14-15. The Tesla Manual, like the manual in *VMAC* and contrary to the manual *Centripetal Networks*, boldly warns next to its table of contents and copyright date that: "this material may not be reproduced or copied, in whole or in part, without the written permission of Tesla Motors, Inc." Ex. 1005, 1. The 100 customers that received the 100 hard copies were prohibited from reproducing or copying the Tesla Manual for sharing with others interested and having ordinary skill in the art.

In arguing that the Tesla Manual "bears a 2008 copyright date, was published in the first quarter of 2008, and was included with all Roadsters delivered to customers in that year" evidence public accessibility, Petitioner cites the proposition that "a limited distribution can make a work publicly accessible under certain circumstances." *See* Pet., Paper 2, 9 (citing *Hulu LLC*, IPR2018-01039,

Paper 29 at 10-11 (quoting *Samsung Elecs. Co. v. Infobridge Pte. Ltd.*, 929 F.3d 1363, 1369, 1374 (Fed. Cir. 2019)). But Petitioner cites this proposition without analyzing the facts of the *Samsung Electronics* case. The Federal Circuit, in *Samsung Electronics*, clarified that it is important to look past the mere number of copies of the reference distributed, but at the totality of the circumstances of the distribution. *See Samsung Elecs. Co.*, 929 F.3d at 1374. Hence, it is not the mere fact that only 100 hard copies of the Tesla Manual were sent to customers that compels the conclusion that it was not publicly accessible. Rather, it is the totality of the circumstances under which 100 hard copies of the Tesla Manual were distributed—only to customers that are not POSITAs; not sent through any other distribution avenues; and restrictions on its reproduction—that urge the conclusion that it was not publicly accessible.

Tesla has put forth "insufficient evidence that other members of the interested public, such as potential customers or non-customers, could have located [a product manual] upon exercising reasonable diligence." *See ASM IP Holding*, IPR2019-00369, Paper 8 at 19 (denying institution). Instead, Tesla only allegedly distributed manuals to a select few customers that were able to pay nearly $100,000 or more for a vehicle. This cost to obtain the Tesla Manual "weighs ... against finding the document was 'publicly accessible.'" *ASM IP Holding*, IPR2019-00369, Paper 8 at 18; *Virginia Innovation Scis. v. Samsung*

Elecs. Co., 983 F. Supp. 2d 713, 738 (E.D. Va. Jan. 8, 2014) ($10,000 membership fee was "too high to consider the document accessible to the interested public"); *Halliburton Energy Servs. v. Dynamic 3D Geosolutions LLC*, IPR2014-01186, Paper 18 at 6-7 (PTAB Feb. 18, 2015) ("the high licensing fees here effectively restricted who could purchase it"). Paying around $100,000 to access the Tesla Manual far exceeds the requirements of what is fairly considered reasonable diligence that a POSITA should exercise in locating a reference. EX. 2001, Goldberg Decl., ¶80. Accordingly, institution should be denied for all challenged claims.

D. Kato in view of Eberhard and the Tesla Manual fails to teach the slider element.

Petitioner alleges that the slider element is disclosed by Kato in view of Eberhard and the Tesla Manual. The slider element in challenged claim elements 1[m] and 6[l], which is a requirement in all challenged claims recites that user of the electric vehicle via the graphical user interface where "an amount of charge may be specified" via a slider element. Neither Kato, Eberhard, nor the Tesla Manual disclose the slider element because they are not designed for a ***user*** to specify the amount of charge. Rather, Kato, Eberhard, and the Tesla Manual all disclose ***systems*** that simply indicate the amount of charge, rather than an interface that allows the user to specify it.

Kato's Graphical user Interface ("GUI") is designed to display an amount of

time required for charging, but not for a user to specify a desired state of charge. Moreover, Kato doesn't even provide or suggest an input element that allows a user to specifiy a desired amount of charge for any charging instance, or teach about user input for chargin paramaters. In Kato's system, a user sets the destination. Ex. 1008, [0055]. The system then identifies the charging points on the route to the destination and calculates the remaining state of charge at each charging point after traversing from one charging point to another. *Id.*, [0055]. The only parameter that a user can specify is the destination, but not the state of charge at the destination or each charging point. *See id.* Kato's system sets the necessary state of charge, explaining that "the CPU 31 executes an energy control determination." *Id.*, [0055]. The battery remaining SOC is a "charging condition" used by the CPU 31 to specify the necessary amount of charge. *Id.*

Eberhard's GUI similarly prohibits a user from specifying the desired state of charge. A user can specify different modes that ultimately affect the state of charge (expressed as a cut-off voltage), but the system makes the final determination of the required amount of charge:

> A method and apparatus that allows the end user to optimize the performance … the invention includes multiple charging/operational modes from which the user may select. Each charging/operational mode controls the cut-off voltage.

Ex. 1009, Abstract. Even then, the cut-off charge is only an approximation of the amount to charge. Ex. 2001, ¶X. The specific purpose of the mode setting is

conserve battery life over time, not to set an amount of charge. *See* Ex. 1009, 1:22-2:5 (Background of Invention). The descriptions of Figures 5, 6, 7, and 8 of Eberhard further confirm that Eberhard is a mode selector instead of charge amount selector, describing each embodiment of the interface as a "charging/operational mode selector." *Id.*, 3:26-35. The representative embodiment of Fig. 5 allows the selection between a "storage," "standard," "max range," and "performance" operational modes to increase or decrease long-term battery life:

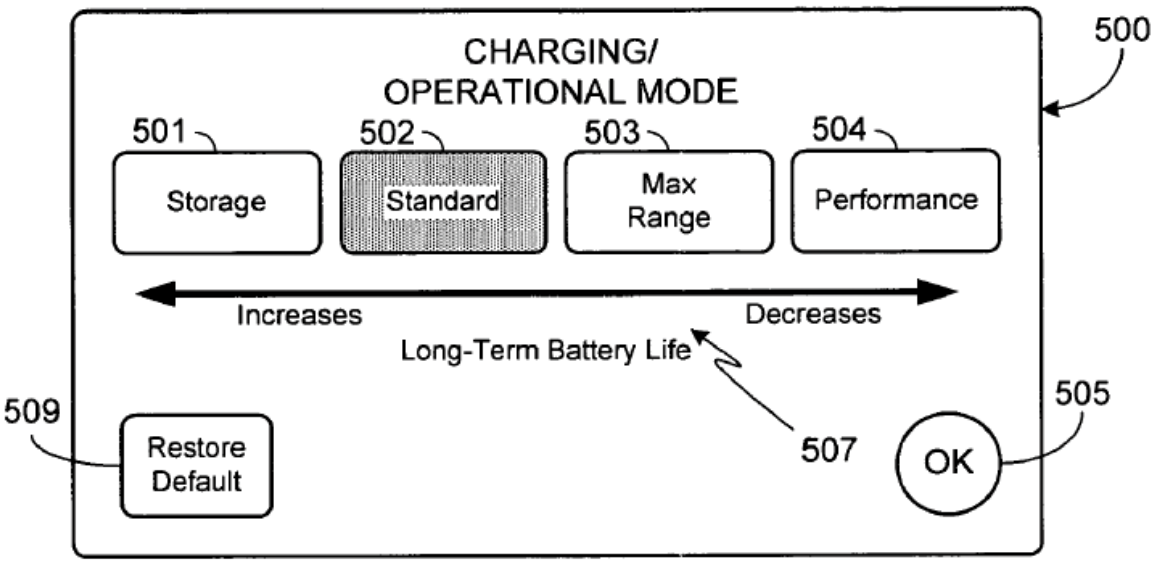

Fig. 5 of Eberhard (reproduced above).

The bi-directional arrow of "increases" and "decreases" indicates that through a user's selection of an operational mode, long term battery life can be set. However, none of the "Charging / Operation Modes" that a user can select allow a user to select a desired amount of charge – as required by the challenge claims. Likewise, the system in the Tesla Manual is similarly not for specifying the desired

amount of charge. Instead, the GUI is designed to display the existing state of charge in the battery as dictated by the charge settings specified by the user. EX1005, 8-9. The figures appearing in the Tesla Manual when read together show that a user selects between a charge setting of "storage," "standard," "max range," and "performance" and the resultant state of charge based on the charge setting:

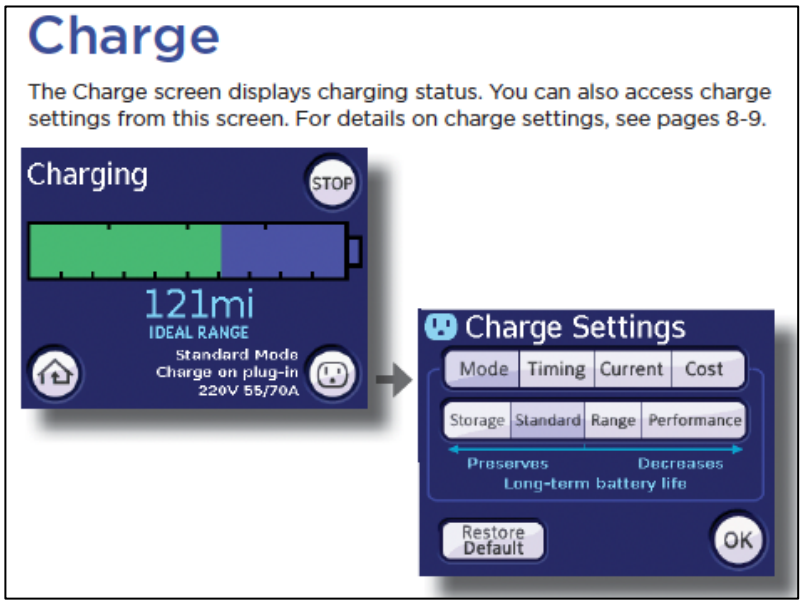

Ex. 1005, 2 (reproduced above)

Figure 5 of Eberhard is remarkably similar to the "Charge Settings" of the Tesla Roadster Touch Screen GUI. Ex. 2001, Goldberg Decl. at ¶89. This is not surprising since both originated from Tesla. *Id.* They both show that the battery state of charge indicator is a display intended to show the resultant state of charge based on a charge setting/mode specified by the user, not for specifying the desired amount of charge.

Petitioner suggests that the description in Eberhard of an alternate

embodiment where "the user selects the average charge, e.g., 30%, 40%, 50%, 60%, 70%, 80%, 90% and 100%," (Ex. 1001, 8:23-25) and the state of charge indicator of the Tesla Manual would together lead a POSITA to understand that a slider element for specifying the state of charge is disclosed. That is incorrect. Ex. 2001, Goldberg Decl., ¶¶94-97. The "average charge" in Eberhard is an average charge level of rated capacity that the battery is targeted for over multiple charge and discharge cycles. *Id.* The "average charge" is not an amount of charge desired by the user for a particular charge cycle, i.e., the amount of charge for a trip. *Id.* Eberhard describes the standard mode as targeting an average charge level of 70%-95% of the rated capacity, the storage mode at 30%-70% of rated capacity, the extended driving range mode at 90%-100% of rated capacity, and the performance mode at 90%-100% of rated capacity. Ex. 1009, 6:8-10, 6:24-26, 6:52-55, 6:59-61.

Therefore, even though in an alternative embodiment the user can specify a desired average charge level, this charge level is the level of rated capacity that the battery is targeted for charging over multiple charge and discharge cycles and not the charge for a single charge cycle desired by a user. Ex. 2001, Goldberg Decl., ¶¶94-97. This is an alternative embodiment for protecting the battery health's by targeting a charge level, and not for specifying a particular charge level on a trip. Ex. 2001, Goldberg Decl., ¶¶94-97. It is well understood that charging a battery to levels lower than its full rate capacity protects the battery's long-term health. *Id.*

Kato, when combined with Eberhard and the Tesla Manual, fails to provide a slider element which allows a user to specify an amount of charge. At best, the single cursory disclosure in Eberhard allows a user to perhaps select an average charge, not via a GUI slider mechanism. As stated above, this average charge is not a specified amount of charge as required by the challenged claims. If a user in the proposed combination of Kato, Eberhard and the Tesla Manual wanted to limit a specific charge instance to 60%, Petitioner's proposed combination provides no mechanism to do this. Instead, at best, the combination of Kato, Eberhard and the Tesla Manual allows for a user to select a mode where, over a number of charges, the average charge of the battery is 60%. That "average charge" has no impact on the limit of the instantaneous charge at the charging station disclosed in Kato. Petitioner's combination fails, and as a result, institution for all challenged claims should be denied.

VIII. CONCLUSION

For the reasons stated above, Patent Owner respectfully asks the Board to deny institution of IPR2022-01217.

Dated: November 4, 2022

Respectfully submitted,

/Bradley D. Liddle/

CERTIFICATE OF WORD COUNT UNDER 37 C.F.R. § 42.24(b)(1)

I, the undersigned, do hereby certify that the foregoing Patent Owner Preliminary Response, including footnotes, contains no more than 14,000 words, as measured by the Word Count function of Microsoft Word as specified by 37 C.F.R. § 42.24(b)(1).

/Bradley D. Liddle/

CERTIFICATE OF SERVICE

I hereby certify that on this 4th day of November, a true and correct copy of the foregoing PATENT OWNER'S PRELIMINARY RESPONSE was served by electronic mail upon the following counsel of record for Petitioners:

David A. Caine (Reg. No. 52,683)
david.caine@arnoldporter.com
Arnold & Porter Kaye Scholer LLP
5 Palo Alto Square, Suite 500
3000 El Camino Real
Palo Alto, CA 94306
Tel: 650-319-4500
Fax: 650-319-4700

Michael J. Sebba (Reg. No. 75,595)
michael.sebba@arnoldporter.com
Arnold & Porter Kaye Scholer LLP
777 South Figueroa Street | 44th Floor
Los Angeles, CA 90017-5844
Tel: 213.243.4000
Fax: 213.243.4199

/Bradley D. Liddle/