IN THE UNITED STATES DISTRICT COURT
FOR THE WESTERN DISTRICT OF TEXAS
AUSTIN DIVISION

CHARGE FUSION TECHNOLOGIES, LLC,	)	
Plaintiff,	)	CASE NO. 1:22-cv-00488-LY
v.	)	
	)	JURY TRIAL DEMANDED
TESLA, INC.,	)	
Defendant.	)	

OPENING CLAIM CONSTRUCTION BRIEF OF DEFENDANT TESLA, INC.

TABLE OF CONTENTS

I. Introduction 1

II. Technological Background of the Asserted Patents 1

A. Overview of the ’488 Patent 1

B. Overview of the ’135 Patent 2

C. Overview of the ’753 Patent 3

III. Disputed Claim Terms 4

A. “electrical charging system” (’488 patent, claims 1-4, 6-10, 13-15; ’753 patent, claims 1-10) 4

B. “vehicle sensor” (’488 patent, claims 1, 13) 8

C. “electric charge provider” (’488 patent, claims 1, 13) 12

D. “expected future electrical provider system load” (’488 patent, claim 15) 15

E. “receiving an amount of charge specified by the slider” (’135 patent, claim 14) 17

F. “maintain an interior temperature of the electric vehicle suitable for a pet located within the electric vehicle” (’135 patent, claims 1, 8, 14) 19

G. “for a duration of time until the amount of charge residing in the battery reaches a predetermined level” (’135 patent, claim 1) 22

H. “operating an A/C mechanism of the electric vehicle in accordance with the selected mode of operation” (’135 patent, claims 8) 24

I. “the selected mode of operation cannot be maintained by the amount of charge residing in the battery for more than a threshold amount of time” (’135 patent, claim 8) / “minimum battery charge level required to maintain the stored temperature for a threshold amount of time” (’135 patent, claim 14) 28

IV. Conclusion 30

TABLE OF AUTHORITIES

Page(s)

Cases

Adaptix, Inc. v. Huawei Technologies Co. Ltd.,
74 F. Supp. 3d 832 (E.D. Tex. 2014) 18

Bell Commc'ns Rsch., Inc. v. Vitalink Commc'ns Corp.,
55 F.3d 615 (Fed. Cir. 1995) 5

Berkheimer v. HP Inc.,
881 F.3d 1360 (Fed. Cir. 2018) 19, 23, 24

Bicon, Inc. v. Straumann Co.,
441 F.3d 945 (Fed. Cir. 2006) 26

Brazabra Corp. v. Ce Soir Lingerie Co., Inc.,
No. 1:18-CV-683-RP, 2019 WL 13136348 (W.D. Tex. Aug. 15, 2019) 20, 21

Bushnell Hawthorne, LLC v. Cisco Sys.,
813 F. App'x 522 (Fed. Cir. 2020) 17, 24, 26

Garfinkel v. Decru, Inc.,
No. CIV.A. 5:07-CV-19 DF, 2008 WL 5428170 (E.D. Tex. June 13, 2008) 13, 14

Groove Digital Inc. v. United Bank,
825 F. App'x 852 (Fed. Cir. 2020) 10

Halliburton Energy Servs., Inc. v. M-I LLC,
514 F.3d 1244 (Fed. Cir. 2008) 16

Innovative Memory Sys., Inc. v. Micron Tech, Inc.,
781 F. App'x 1013 (Fed. Cir. 2019) 26

Interactive Gift Exp., Inc v. Compuserve Inc.,
256 F.3d 1323 (Fed. Cir. 2001) 9, 11, 12

Interval Licensing LLC v. AOL, Inc.,
766 F.3d 1364 (Fed. Cir. 2014) 18, 20, 21

Kyocera Senco Indus. Tools Inc. v. Int'l Trade Comm'n,
22 F.4th 1369 (Fed. Cir. 2022) 14

Nautilus, Inc. v. Biosig Instruments, Inc.,
572 U.S. 898 (2014) 17, 24

O2 Micro Int'l Ltd. v. Beyond Innovation Tech. Co.,
521 F.3d 1351 (Fed. Cir. 2008).....12

Phillips v. AWH Corp.,
415 F.3d 1303 (Fed. Cir. 2005).....9

Proveris Sci. Corp. v. Innovasystems, Inc.,
739 F.3d 1367 (Fed. Cir. 2014).....5

Qcue, Inc. v. Digonex Technologies, Inc.,
2013 WL 4784120 (W.D. Tex. Sep. 5, 2013).....16

Retractable Techs., Inc. v. Becton, Dickinson and Co.,
653 F.3d 1296 (Fed. Cir. 2011).....8

Sensor Elec. Tech., Inc. v. Bolb, Inc.,
No. 18-CV-05194-LHK, 2019 WL 4645338 (N.D. Cal. Sep. 24, 2019).....18

Sinorgchem Co., Shandong v. Int'l Trade Comm'n,
511 F.3d 1132 (Fed. Cir. 2007).....5, 14

Trustees of Columbia Univ. in City of New York v. Symantec Corp.,
811 F.3d 1359 (Fed. Cir. 2016).....10

Versata Software, Inc. v. Zoho Corp.,
213 F. Supp. 3d 829 (W.D. Tex. 2016).....16

In re Walter,
698 F. App'x. 1022 (Fed. Cir. 2017) 18

Wasica Finance GmbH v. Continental Auto. Sys., Inc.,
853 F.3d 1272 (Fed. Cir. 2017).....26

Wi-Lan USA, Inc. v. Apple Inc.,
830 F.3d 1374 (Fed. Cir. 2016).....7

I. INTRODUCTION

This case involves three related patents with identical specifications: U.S. Patent No. 9,853,488 ("the '488 patent"), U.S. Patent No. 10,819,135 ("the '135 patent"), and U.S. Patent No. 10,988,753 ("the '753 patent") (collectively, the "Asserted Patents"). Where a disputed term in the Asserted Patents is not indefinite, Tesla's proposed constructions are consistent with the intrinsic record and the understanding of a person of ordinary skill in the art ("POSITA").

II. TECHNOLOGICAL BACKGROUND OF THE ASSERTED PATENTS

A. Overview of the '488 Patent

The '488 patent is directed to systems and methods for charging electric vehicles to achieve the vehicle operator's preferences while considering the impact of the charging on the electric power distribution grid and load balancing of electrical demand. '488 patent (Dkt. 1-1) at Abstract. The core of that system is "an electrical charging system" comprising "a vehicle sensor," a "communication device," a "processor in communication with the vehicle sensor and the communication device," and "a memory in communication with the processor" that detects, via the vehicle sensor, an electric vehicle's presence in a parking space and creates a charge schedule to initiate the charging of the electric vehicle by receiving, via the communication device, charging preferences of the operator of the vehicle and determining dynamic attributes of the electric charge provider. *See, e.g.*, Dkt. 1-1 at claim 1.

Figure 4 (to the right) illustrates the claimed electrical charging system (440) and its components (*e.g.*, vehicle sensor (454) and processor (446)) in relation to the electric charge

provider (power supply entity, 406) and the electric vehicle that accepts electrical power from the electrical charging system (440). *See also* Fig. 5. The '488 patent explains that the vehicle sensor of the electrical charging system can "detect an arrival, proximity, and/or presence of the vehicle" in a parking spot in various ways, such as "wireless interrogation," "motion sensing, pressure sensing, light sensing, metal detecting, and/or wireless electronic transmission sensing." *Id.* at 9:40-56, 16:14-24.

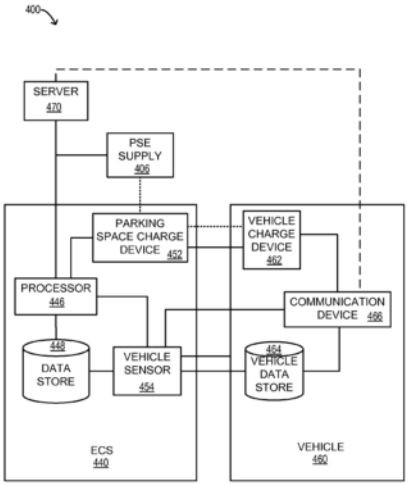

The '488 patent further explains that the vehicle operator charging preferences may be "desired vehicle charging parameters, charging schedules, and/or rules regarding how, when, and/or where (e.g., designating specific parking spaces and/or parking lots) the vehicle 460 should be charged and/or how, when, and/or where electrical energy should be received from the vehicle 460." *Id.* at 10:3-11. And that the dynamic attributes of an electric charge provider can be, *e.g.*, the current or predicted cost of electricity. *See id.* at 20:36-63.

The electrical charging system of the '488 patent then determines a charging schedule for the vehicle that seeks to meet the vehicle operator's preferences (*e.g.*, maximizing charge while minimizing costs, or charging within a specified time frame), while factoring the dynamic attributes of the electric charge provider, to charge the electric vehicle. *See id.* at 16:43-56.

B. Overview of the '135 Patent

The '135 patent is directed to "methods, procedures, and/ or processes" for "charging electric vehicles." Dkt. 1-2 at Abs., 16:1-2. The '135 patent describes that the "system 600 may be utilized to setup, define, store, and/or update or change preference…data that is utilized by an ECS (not shown in FIG. 6) to determine…when, and/or where to transfer electrical energy to and/or from the vehicle 660." *Id.* at 13:30-34; *see also id.* at 10:7-23. The '135 patent notes

"preference data may be defined,...via the communication device 666" and that "[t]he operator of the vehicle 660 may, for example, select a first menu option 668a to define settings regarding desired charge levels, charging times, desired travel distances and/or itineraries, etc." *Id.* at 13:64-14:2; *see also id.*, 14:63-15:10. To specify desired charge levels, the '135 patent describes a web interface with a "vehicle charge indicator 714 that visually indicates a current charge level 716 of the vehicle" and "a desired charge percent level 718 [which] may be both shown and alterable." *Id.* at 14:44-47, Fig. 7. "A user may select the desired charge percent level 718, for example, and may slide the marker on the vehicle charge indicator 714 to a new described location." *Id.* at 14:47-49, Fig. 7.

The '135 patent's claims are directed to "a non-transitory computer readable storage medium storing instructions that, when executed by a processor, cause the processor to" *inter alia*, retrieve charging parameters, display these parameters to a mobile device, allow an amount of charge to be specified through a slider, commence charging, and operate climate control in the vehicle, as well as "maintain an interior temperature of the electric vehicle suitable for a pet located within the electric vehicle" until the amount of vehicle battery charge "reaches a predetermined level." *Id.* at claim 1.

C. Overview of the '753 Patent

The '753 patent is directed to an electrical charging system for vehicles. The electrical charging system includes a memory and a processor, and charges a vehicle according to a charge schedule that is computed by the electrical charging system. Dkt. 1-3 at claim 1. The claims require that the electrical charging station compute the charge schedule comprising "a scheduled start time and an indication of a scheduled stop time for charging the electric vehicle at each of the one or more of the plurality of charging locations and a sequence defining an order in which the electric vehicle is to be charged at each of the one or more of the plurality of charging locations,

wherein a first charging location of the sequence is computed based, at least in part, on an ability of the electric vehicle to travel to the first charging location utilizing a charge amount stored in a battery of the electric vehicle." *See id.* at claim 1. Outside of the claim language, the specification does not provide any discussion of how the electric charge provider computes such a charge schedule in the manner claimed.[1]

In addition, the claimed electrical charging system includes a vehicle charge indicator element that displays the battery charge residing in a battery of the electric vehicle, as well as the uncharged capacity of the battery on a graphical user interface of the vehicle. *Id.* Further, that vehicle charge indicator element comprises a slider by which an amount of charge may be specified. *Id*; *see also id.* at Fig. 7 (item 714 and 718); 14:49-53 ("A user may select the desired charge percent level 718, for example, and may slide the marker on the vehicle charge indicator 714 to a new described location and/or may utilize the exemplary up/down arrow controls to increase or decrease the desired charge percent level 718.").

III. DISPUTED CLAIM TERMS[2]

A. "electrical charging system" ('488 patent, claims 1-4, 6-10, 13-15; '753 patent, claims 1-10)

Charge Fusion's Proposal	Tesla's Proposal
"system configured to facilitate the charging of one or more vehicles"	"system configured to facilitate the charging of one or more vehicles including by providing electrical power"

The parties agree that an "electrical charging system" should be limited to the lexicography set forth in the specification. That definition includes a "system configured to facilitate the

[1] In IPR2021-01217 involving the '753 patent, the PTAB *sua sponte* raised the issue that certain claim limitations of the '753 patent should be construed as means-plus-function limitations. Tesla expects the PTAB will issue an opinion resolving this issue well before the *Markman* hearing, which may necessitate short supplemental claim construction briefing limited to this issue.

[2] Proposed constructions herein are reflected in the parties' First Amended Joint Claim Construction Statement, filed on January 6, 2023. (Dkt. 59.)

charging of one or more vehicles." The sole dispute centers on whether, as Tesla contends, the "electrical charging system" must charge electric vehicles by "providing electrical power." The patentee's definition, the other portions of the specification, and the claims confirm that it does.[3]

The '488 patent's specification includes a distinct section entitled, "II. Terms and Definitions."[4] Dkt. 1-1, 2:40-6:5. This section defines an "electric charging system"[5] as:

> As used herein, the terms 'electric charging system' and 'ECS' may generally be utilized interchangeably and may generally refer to any combination of hardware, software, firmware, and/or microcode that is operative **to** conduct, manage, schedule, and/or otherwise **facilitate the charging of one or more vehicles**. As utilized in some embodiments, an ECS may comprise **a system configured to charge a plurality of vehicles** (such as electric and/or hybrid-electric vehicles) parked in a parking lot and **coupled to accept (e.g., from the ECS and/or a component thereof) electrical power**. In some embodiments, such vehicles may be coupled to accept electrical power from an ECS in a wired and/or wireless fashion.

Id. at 2:64-3:10 (emphasis added). Because the term "electric charging system" or "ECS" is set off by quotation marks and is defined within the "Terms and Definitions" section, that indicates that the patentees are acting as lexicographers for the term. *See Sinorgchem Co., Shandong v. Int'l*

---

[3] Despite being in the preamble, the reference to "electrical charging system" is limiting because "it recites particular structure or steps that are highlighted as important by the specification." *See Proveris Sci. Corp. v. Innovasystems, Inc.*, 739 F.3d 1367, 1372 (Fed. Cir. 2014). Indeed, as explained herein, the patentees expressly defined the term "electrical charging system" as a distinct system component that plays a particular role and performs specific functions. At the heart of the claimed system is the "electrical charging system" in relation to other distinct claimed elements, such as the "vehicle," the "operator," and the "electric charge provider." And where, as here, the claim drafter "chooses to use both the preamble and the body to define the subject matter of the claimed invention," that is what defines the scope of the claims. *Bell Commc'ns Rsch., Inc. v. Vitalink Commc'ns Corp.*, 55 F.3d 615, 620 (Fed. Cir. 1995).

[4] The same is true for the '753 patent, which shares the same specification as the '488 patent.

[5] The patent also defines an "electrical charging system" as an "ECS." Dkt. 1-1 at 7:52-57 ("…a Power Supplying Entity (PSE) supply line 304 coupled to provide power to an Electrical Charging System (ECS) 340"). As the definition for "electric charging system" in the specification is also the definition for "ECS," a POSITA would clearly understand that the term "electric charging system" and "ECS" are synonymous with the claim term "electrical charging system," and that the patentees' definition applies equally to all those terms. Ehsani, ¶ 58.

Trade Comm'n, 511 F.3d 1132, 1136 (Fed. Cir. 2007) (finding terms "set off by quotation marks [are] often a strong indication that what follows is a definition"). The definition therein confirms that the "electrical charging system" (or ECS) facilitates the charging of one or more electric vehicles, but also that those vehicles accept electrical power ***from*** the ECS to facilitate such charging. Stated differently, the electrical charging system facilitates the charging of electric vehicles by providing electrical power to them. *See* Ehsani[6], ¶ 58.

This understanding is consistent with the manner in which the electrical charging system is described throughout other parts of the intrinsic record. In fact, in *every* embodiment, the electrical charging system is described as a component—distinct from electric vehicles and the power supplying entity—which provides electrical power to the vehicle when charging it. Ehsani, ¶ 59-63; *see, e.g.*, Dkt. 1-1 at Figs. 3-5, 7:52-64; 11:41-48; 11:49-54; 13:25-29; 14:59-64. For example, Figure 4 shows the ECS (440) as physically separate from the vehicle (460) to be charged and supplies electrical power to facilitate the charging of the vehicle. Ehsani, ¶ 60.

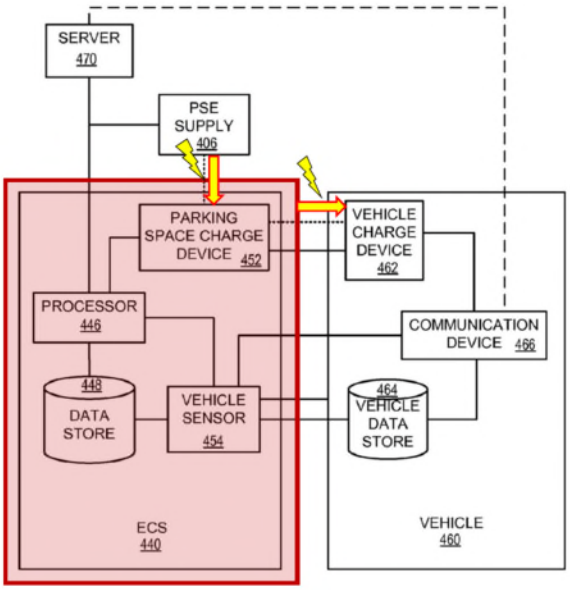

[6] "Ehsani" refers to the Declaration of Dr. Mark Ehsani In Support of Defendant Tesla, Inc.'s Claim Constructions, filed concurrently herewith.

Id. at Fig. 4 (annotated). As the patents explain, when the ECS (440) detects the presence of the vehicle via the ECS' vehicle sensor (454), the ECS can then commence charging the vehicle (460) through the electrical energy received by the ECS from the PSE Supply 404/406[7] and provide it to the vehicle 460 coupled to the ECS. Ehsani, ¶ 61; *see* Dkt. 1-1. at 9:11-19, 9:40-43.

The same is true for Figure 5, which also shows the ECS (540) as a separate system that connects with vehicles (and the PSE) and supplies electrical power received from the PSE to the vehicles to charge them (560a-b). Ehsani ¶ 62; Dkt. 1-1 at 11:33-52. More specifically, the "electrical charging system" (540) comprises "a parking lot 550 comprising one or more parking space charge devices 552a-b and/or one or more vehicle sensors 554a-b," and is "***configured to provide electrical energy*** from the PSE supply line 504 and/or transformer/inverter 548 ***to the vehicles 560a-b***." Dkt. 1-1 at 11:49-52, 12:22-25 (emphasis added). Tesla's proposed construction of "electrical charging system" as the "system configured to facilitate the charging of one or more vehicles including by providing electrical power" captures the relationship where electrical power flows from the ECS to the electric vehicle. Ehsani, ¶ 64; *see also Wi-Lan USA, Inc. v. Apple Inc.*, 830 F.3d 1374, 1382 (Fed. Cir. 2016) ("Consistent use of a term in a particular way in the specification can inform the proper construction of that term.").

The relationship of the various components (e.g., ECS, including its vehicle sensor, the PSE, and the vehicle) in the system described in the specification is further consistent with the claims themselves. For instance, the asserted claims of the '488 patent require a "processor" of the "electrical charging system" to "receive, from the vehicle sensor, information indicative of the presence of a vehicle in a parking space" and then "initiate a charging of the vehicle." *See* Dkt. 1-

[7] The PSE Supply is referred to as both 404 and 406 in the specification, although is shown as 406 in FIG. 4.

1 at Claims 1, 13. Thus, where the electrical charging system is required to initiate the charging of the detected vehicle, it can only do so by providing electrical power to charge the vehicle, which is consistent with Tesla's proposed construction. Ehsani, ¶ 65; *see Retractable Techs., Inc. v. Becton, Dickinson and Co.*, 653 F.3d 1296, 1305 (Fed. Cir. 2011) ("In reviewing the intrinsic record to construe the claims, we strive to capture the scope of the actual invention, rather than strictly limit the scope of claims to disclosed embodiments or allow the claim language to become divorced from what the specification conveys is the invention.").

Accordingly, given the patentees' lexicography, which is consistent with the claims and the specification, "electrical charging system" should be construed to be a "system configured to facilitate the charging of one or more vehicles including by providing electrical power."

B. "vehicle sensor" ('488 patent, claims 1, 13)

Charge Fusion's Proposal	**Tesla's Proposal**
Plain and Ordinary meaning applies such as: "a device capable of determining presence of a vehicle or vehicle conditions"	"sensor of the electrical charging system that detects the presence of a vehicle"

There is no dispute that the claimed "vehicle sensor" detects "the presence of a vehicle." The competing proposals, however, deviate in two significant respects: (1) the location of the vehicle sensor (*i.e.*, whether it is part of the "electrical charging system" as Tesla argues, or whether it can be anywhere, including on the vehicle itself, as Charge Fusion's proposal allows); and (2) whether it functions to do something other than detect the presence of a vehicle (*i.e.*, whether it can determine only vehicle conditions, as Charge Fusion proposes). Only Tesla's proposed construction (*i.e.*, a "sensor of the electrical charging system that detects the presence of the vehicle") aligns with the intrinsic record and the context of the claims.

The '488 patent makes clear that a "vehicle sensor" is a "sensor of the electrical charging system" and functions to "detect the presence of a vehicle." For instance, the asserted claims begin

by claiming an "electrical charging system, comprising: a vehicle sensor" and that the system "receives, from the vehicle sensor, information indicative of a presence of a vehicle in a parking space." *See* Dkt. 1-1 at claim 1, Ehsani, ¶ 69; *Phillips v. AWH Corp.*, 415 F.3d 1303, 1314 (Fed. Cir. 2005) ("the claims themselves provide substantial guidance as to the meaning of particular claim terms" and "the context in which a term is used in the asserted claim can be highly instructive."); *Interactive Gift Exp., Inc v. Compuserve Inc.*, 256 F.3d 1323, 1331 (Fed. Cir. 2001) ("the analytical focus must begin and remain centered on the language of the claim themselves.").

Moreover, the claim term, when read in light of the specification, is consistently identified as the sensor within the electrical charging system that detects the presence of a vehicle. Ehsani, ¶ 70. For example, Figure 4 (right) depicts a "PSE [Power Supplying Entity] supply 404 coupled to provide power to an ECS [Electrical Charging System]." Dkt. 1-1 at 9:12-13. As shown, the electrical charging system (ECS) "may comprise one or more vehicle sensors 454." *Id.* at Fig. 4 (annotated); *id.* at 9:18-19. The patent explains that the purpose of that vehicle sensor is to allow the electrical charging system (ECS) to know when a vehicle arrives in a parking space in order to charge it:

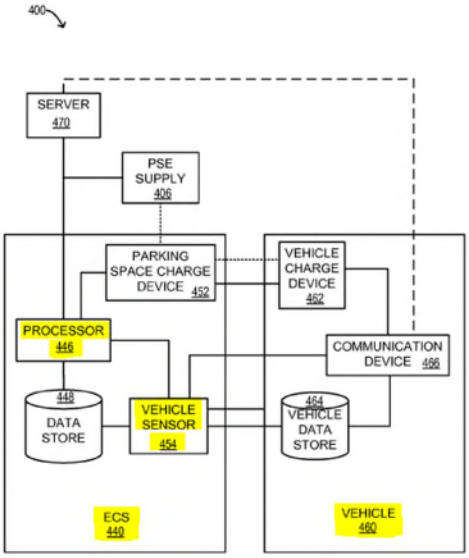

> According to some embodiments, ***the vehicle sensor 454 may be coupled (such as in and/or near a parking space) to detect an arrival, proximity, and/or presence of the vehicle 460.*** The vehicle sensor 454 may, for example, comprise a magnetically actuated device that reacts to the large volume of metal that many vehicles are comprised of, and/or may comprise a pressure sensor (e.g., to detect the weight/mass of the vehicle 460), a motion sensor (which may include both electrical and non-electric devices), and/or other electronic devices. In some embodiments, the vehicle sensor 454 may comprise a communication device such as a Bluetooth® and/or passive-inductive device that is operable to detect the presence of the vehicle 460 utilizing wireless interrogation methodologies. In such

> a manner, for example, the vehicle sensor 454 may communicate with the communication device 466 and/or the vehicle data store 464, both of the vehicle 460.

Ehsani, ¶ 71; *see also id.* at ¶¶ 70, 72; Dkt. 1-1 at 9:40-56 (emphasis added); *id*. at 11:49-52 ("The ECS 540 may, in some embodiments, comprise and/or be associated with a parking lot 550 comprising one or more parking space charge devices 552*a-b* and/or one or more vehicle sensors 554*a-b*."); *id.* at 12:53-58 ("…the vehicle sensors 554*a-b* may detect a proximity and/or presence of the vehicles 560*a-b*…"); *id.* at Figs. 4-5. Where, as here, every embodiment is consistent with the understanding that the vehicle sensor of the electrical charging system (ECS) must detect the presence of a vehicle's arrival in a parking spot, then "the meaning [of the term] may be found in or ascertained" in reading the specification. *See Trustees of Columbia Univ. in City of New York v. Symantec Corp*., 811 F.3d 1359, 1364 (Fed. Cir. 2016); *see also Groove Digital Inc. v. United Bank*, 825 F. App'x 852, 856 (Fed. Cir. 2020) (concluding that the construction of "applet" to require geotargeting was not error, where the patent "repeatedly, consistently, and exclusively" depicted applets as being geotargeted and the patent's Field of the Invention described the "present invention" as "delivering and serving local content and advertisements").

Furthermore, because the vehicle sensor is detecting the presence of a vehicle upon arrival in a parking space to initiate vehicle charging, it must logically be part of the electrical charging system (ECS) itself, *i.e.*, external to the vehicle it is sensing. *See* Ehsani, ¶ 72. The specification explains that the vehicle sensor can *receive* information *from the vehicle* after detection:

> ***[T]he <u>vehicle sensor 454 may receive</u> data from the communication device 466 and/or the vehicle data store 464***. The vehicle sensor **454** may receive, for example, an indication of an identifier of the vehicle **460** such as a ***Vehicle Identification Number (VIN), a license plate number, an electric utility account number, an EZ-Pass® account and/or tag number, and/or another identifier or account number such as a Pay Pal® account number. Such identifying information may be stored, for example, in the vehicle data store 464 and may be communicated directly <u>to the vehicle sensor</u> 454 of the ECS 440 or via the communication device 466 of <u>the vehicle</u> 460***.

Dkt. 1-1 at 9:57-10:1 (emphasis added); *see also id*. at 12:53-13:8. If, for instance, the vehicle sensor was on the vehicle as opposed to part of the electrical charging system (ECS), it would be non-sensical for the sensor to receive information that is already stored and accessible in the vehicle itself. *See* Ehsani, ¶ 66, 73 (explaining that without a "vehicle sensor" being on the electrical charging system (ECS) it allows it to be on devices on or within a vehicle, which would yield absurd scenarios such as the vehicle detecting and/or communicating the presence of itself, and/or the vehicle communicating its own vehicle-specific information to itself). *See Interactive Gift Express, Inc.* 256 F.3d at 1336 (rejecting claim construction that is "illogical and does not accord with the plain import of the claim language").

For that reason, Charge Fusion's proposed construction of "a device capable of determining the presence of a vehicle or vehicle conditions" should be rejected. Charge Fusion's proposal is silent as to where the vehicle sensor is located, which effectively untethers the sensor from the electric charging system (ECS) to allow it to exist off of the ECS and on the vehicle. But, where the claims recite that the processor "receives, from the vehicle sensor, information indicative of a presence of a vehicle in a parking space," it would be illogical (and inconsistent with the patent) to say that the vehicle receives information from itself indicating that it is in a parking space. Dkt. 1-1 at claim 1; *see* Ehsani, ¶ 75. Furthermore, Charge Fusion's proposal improperly reads out the requirement that the vehicle sensor detects the presence of a vehicle at all. Ehsani, ¶ 76. Its proposal— "a device capable of determining the presence of a vehicle ***or*** vehicle conditions" — includes a disjunctive ("or") to introduce a requirement of "determining … vehicle conditions." In other words, according to Charge Fusion, the vehicle sensor never has to determine the presence of a vehicle—it may simply determine only vehicle conditions, which is inconsistent with the claims and the specification. *Id.* Further, the patent never suggests that the vehicle sensor

"determine" anything other than the presence of a vehicle. Ehsani, ¶ 77. At best, the vehicle sensor in some embodiments merely receives vehicle information that is *already determined and stored in the detected vehicle*. *Id.*; *see, e.g.*, Dkt. 1-1 at 9:57-10:1 ("The vehicle sensor 454 may receive, for example, an indication of an identifier of the vehicle 460 such as a Vehicle Identification Number (VIN), a license plate number, an electric utility account number, an EZ-Pass® account and/or tag number, and/or another identifier or account number such as a Pay Pal® account number. Such identifying information may be stored, for example, in the vehicle data store 464 and may be communicated directly to the vehicle sensor 454 of the ECS 440 or via the communication device 466 of the vehicle 460."). Equally problematic is that "vehicle conditions" in Charge Fusion's proposal is nowhere recited in the claims or specification and is a phrase that itself introduces ambiguity as to its meaning. Ehsani, ¶ 77; *see O2 Micro Int'l Ltd. v. Beyond Innovation Tech. Co.*, 521 F.3d 1351, 1362 n.3, 1362-63 (Fed. Cir. 2008) (finding problematic constructions that "contain no support from the intrinsic record" and that leave open a dispute regarding its meaning). Thus, because Tesla's proposed construction for "vehicle sensor" is faithful to the intrinsic record, the term should be construed as a "sensor of the electric charging system that detects the presence of a vehicle."

C. "electric charge provider" ('488 patent, claims 1, 13)

Charge Fusion's Proposal	**Tesla's Proposal**
plain and ordinary meaning applies[8]	"power supplying entity that provides electrical power to the electrical charging system"

[8] At around 3:27 pm CT on the filing deadline for opening briefs, Charge Fusion changed its construction to "plain and ordinary meaning" from "facility that provides electrical power," but without further explanation as to what the "plain and ordinary" meaning is, leaving Charge Fusion free to argue the term's scope to the jury, which is improper. *See O2 Micro Int'l*, 521 F.3d at 1361-62. The only clarity from Charge Fusion as to the plain and ordinary meaning is its prior proposal of a "facility that provides electric power," which is addressed in this section.

The term "electric charge provider" only appears in Claims 1 and 13 of the '488 patent, but should be construed according to the lexicography set forth in the '488 patent for the term "power supplying entity." Neither party appears to dispute that the electric charge provider "provides electric power." The dispute appears to center on ***what*** the electric charge provider provides power to in the claimed invention; only Tesla's proposed construction answers that question.

As an initial matter, when a claim term does not explicitly appear in the specification, but a synonymous structure is defined in the specification, the construction of the claim term should align with that synonymous structure. *See Garfinkel v. Decru, Inc.*, No. CIV.A. 5:07-CV-19 DF, 2008 WL 5428170, at *10–11 (E.D. Tex. June 13, 2008). Here, claims 1 and 13 of the '488 patent recite three distinct components: the "electric charge provider," the "electrical charging system" and the "vehicle." Dkt. 1-1 at claims 1, 13. As annotated in the below figures, the '488 patent similarly illustrates the same three components. *Id.* at Figs. 3, 4. But while the terms "electrical charging system" and "vehicle" are used in both the claims and the specification to refer to two of three components, the specification refers to a "power supplying entity" or "PSE" as the third component rather than an "electric charge provider" as claimed.

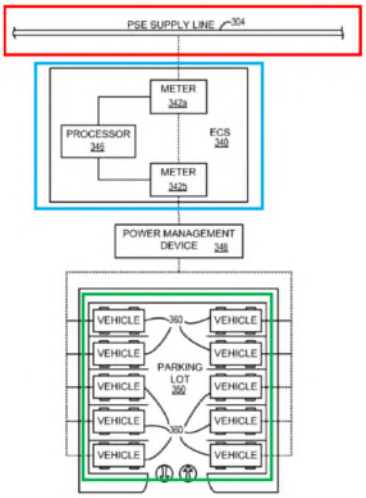

Dkt. 1-1 at Fig. 3 (annotated).

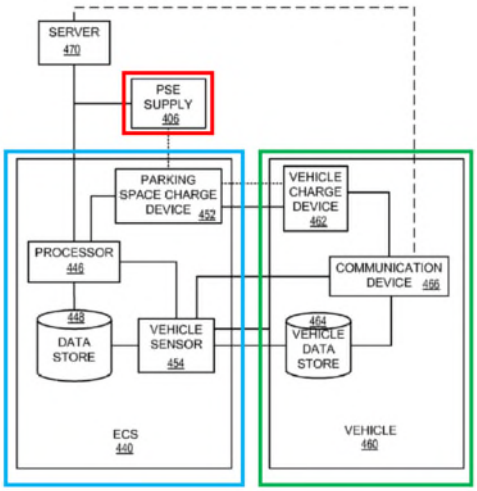

Dkt. 1-1 at Fig. 4 (annotated).

That is, the only component described in the specification that provides electrical power to the electrical charging system (ECS) is the power supplying entity (PSE). And where the claims require that the processor of the ECS "determine a first value of a dynamic attribute of an electric charge provider," the specification explains that the electric charge provider is the PSE:

> In some embodiments, ***the processor 446 may determine (e.g., by communicating with the PSE associated with the PSE supply 404) available market rates (e.g., a time-of-day and/or usage-based rate schedule) for purchasing electrical energy from the PSE supply 404.*** The processor 446 may utilize such rate information in combination with the identification and/or preference information, for example, to determine the most cost-effective schedule for charging the vehicle 460.

Dkt. 1-1 at 10:34-50 (emphasis added); *id.* at claims 1, 13.

Furthermore, in the "Terms and Definitions" section of the '488 patent, the patentees define the term "Power Supplying Entity (PSE)" as "***any entity*** (e.g., person, company, and/or organization or group) that is associated with ***the generation and/or provision, transmission, storage, and/or conversion of electrical energy***," which is coupled to the electric charge provider (ECS). Dkt. 1-1 at 2:49-55 (emphasis added); *see also id*. at 7:52-55; *id.* at Figs. 3-4; *Sinorgchem Co., Shandong*, 511 F.3d at 1136 (finding terms "set off by quotation marks [are] often a strong indication that what follows is a definition"). The manner in which the patentees defined the term is also consistent with how it is described and used throughout the remainder of the specification. *See, e.g.*, Dkt. 1-1 at 7:52-55 ("As shown in FIG. 3, for example, the system 300 may comprise a Power Supplying Entity (PSE) supply line 304 coupled to provide power to an Electrical Charging System (ECS) 340."); *id.* at 9:11-13 ("As shown in FIG. 4, for example, the system 400 may comprise a PSE supply 404 coupled to provide power to an ECS 440."); *id.* at 11:37-39 ("As shown in FIG. 5, for example, the system 500 may comprise a PSE supply line 504 coupled to provide power to an ECS 540."). And where, as here, the surrounding written description is "consistent with, and in fact supports, the patentee's lexicography" then "that definition controls." *See*

Kyocera Senco Indus. Tools Inc. v. Int'l Trade Comm'n, 22 F.4th 1369, 1378-79 (Fed. Cir. 2022) (finding that the patentees acted as their own lexicographer in defining "driven position" and that the surrounding written description language supported the definition).

Thus, given the synonymity both structurally and functionally between the PSE and the "electric charge provider" in the patent and the patentee's definition of PSE, the term "electric charge provider" should be construed to be the "power supplying entity that provides electrical power to the electrical charging system."

D. "expected future electrical provider system load" ('488 patent, claim 15)

Charge Fusion's Proposal	**Tesla's Proposal**
Plain and Ordinary meaning applies	Indefinite

The dispute between the parties concerns whether "expected future electrical provider system load" found within claim 15 of the '488 patent is definite. It is not. A POSITA would not be able to determine with reasonable certainty the scope of the term because the claim, specification, and file history fail to explain the meaning of the term.

In the entire specification, the term "expected" is only used four times. Ehsani, ¶ 79. Two uses of "expected" are in the context of transmission losses, and the other two are in regards to how long a car is to be parked at a certain location. *Id.*; *see also* Dkt. 1-1 at 14:58-15:6 (discussing parking hours expected and expected departure times), 21:65-22:22 (discussing expected transmission losses). Based on the usage in the specification, it is unclear if the expectations of the "future electrical provider system load" are those of the ECS, the user, or the electric charge provider itself. Ehsani, ¶ 79. And, none of those disclosures are directed to issues bearing on the future expected load of the electrical provider system, such as what it would be, how to make such a determination, and when (*i.e.*, at what point in the future) it should be determined. *Id.*

In the specification, there is some disclosure relating to the ECS providing electricity at peak times based on price per kilowatt and deferring charging to a later time because the price per kilowatt may be cheaper. Ehsani, ¶ 80; Dkt. 1-1 at 19:58-63; 20:43-52. However, nowhere does the patent provide guidance as to what the expected future load of the charge provider is, even relative to the price per kilowatt. Ehsani, ¶ 80. There is also no explanation of a correlation between peak times based on price and any expected future load of the electrical provider system, demonstrating only that the inventors contemplated evaluations based on current and future ***pricing***, but not on future—let alone expected future—***load***. *Id*. The price per kilowatt at some point beyond the present may be the result of the expected future load, but it does not inform what the expected future load of the electric charge provider actually is or what criteria goes into making that evaluation. *Id.* Further, there is no discussion of what point in the future any evaluations on load should be made. Indeed, the reference to future is temporally unbounded in the patent. *Id*.

Looking further at the specification, Figure 1 shows a power distribution network grid that contemplates current incoming demand. Ehsani, ¶ 81; Dkt. 1-1 at Fig. 1, 6:26-38. However, Figure 1 and its accompanying description does not discuss "expected future" load or what such a load would mean. Ehsani, ¶ 81. Again, there is no explanation or guidance in the specification of the relationship that current incoming demand has with expected future loads of the electrical provider system, how that current demand has an impact on future loads, if any, or at what future point that load should be assessed. *Id.* There is also no objective criteria provided in the specification to assist a POSITA in determining such load. Ehsani, ¶ 80. Without clarification in the patent on things like what the load expectations are and at what point in the future, or how to determine them, the meaning of this term is not reasonably certain to a POSITA. Ehsani, ¶ 81.

As the patent fails to explain "expected future" load, a POSITA would be unable to determine with reasonable certainty the scope of the term, rendering the term indefinite. *Versata Software, Inc. v. Zoho Corp.*, 213 F. Supp. 3d 829, 838 (W.D. Tex. 2016) (finding claim term indefinite when interpreting the limitation depended on the "expectations" of different parties); *Qcue, Inc. v. Digonex Technologies, Inc.*, 2013 WL 4784120, at *7 (W.D. Tex. Sep. 5, 2013) (finding the term "at or near the expiration time" did not create definite temporal boundaries).

E. "receiving an amount of charge specified by the slider" ('135 patent, claim 14)

Charge Fusion's Proposal	**Tesla's Proposal**
Plain and Ordinary meaning applies	Indefinite

Courts have long recognized that a term may be indefinite if it "does not have proper antecedent basis." *Halliburton Energy Servs., Inc. v. M-I LLC*, 514 F.3d 1244, 1249 (Fed. Cir. 2008); *see also Nautilus, Inc. v. Biosig Instruments, Inc.*, 572 U.S. 898, 901 (2014) (A patent is invalid based on indefiniteness if "read in light of the specification delineating the patent, and the prosecution history, [it] fail[s] to inform, with reasonable certainty, those skilled in the art about the scope of the invention."); *Bushnell Hawthorne, LLC v. Cisco Sys.*, 813 F. App'x 522, 526-27 (Fed. Cir. 2020). The term "receiving an amount of charge specified by the slider" as it appears in Claim 14 of the '135 patent is indefinite because, in spite of the use of the definite article "***the*** slider," no plausible antecedent basis for "the slider" appears in the claim. The term is thus "entirely untethered" from the claim language. *See Bushnell Hawthorne, LLC* at 526.

Unlike Claims 1 and 8 of the '135 patent, which both introduce "***a*** slider" as part of the vehicle charge indicator before specifying that the processor receives an amount of charge specified by "***the*** slider," Claim 14 omits this language:

Claim 1 (Dkt. 1-2)	**Claim 8 (Dkt. 1-2)**	**Claim 14 (Dkt. 1-2)**
"a vehicle charge indicator element comprising a first portion indicative of an amount of charge residing in a battery of the electric vehicle and a second portion indicative of an uncharged capacity of the battery of the electric vehicle **and wherein the vehicle charge indicator element further comprises a slider by which an amount of charge may be specified**; receive an amount specified by **the slider**"	"a vehicle charge indicator element comprising a first portion indicative of an amount of charge residing in a battery of the electric vehicle and a second portion indicative of an uncharged capacity of the battery of the electric vehicle **and wherein the vehicle charge indicator element further comprises a slider by which an amount of charge may be specified**; receiving, via **the slider**, an indication of a desired amount of charge for the battery of the electric vehicle"	"a vehicle charge indicator element comprising a first portion indicative of an amount of charge residing in a battery of the electric vehicle and a second portion indicative of an uncharged capacity of the battery of the electric vehicle; receiving an amount of charge specified by **the slider** and commencing charging of the electric vehicle in accordance with the received amount of charge"

See also Ehsani, ¶¶ 87-88. Further, as shown below, Claim 14 properly introduces other claim elements with indefinite articles except for the slider. The claim recites "***one or more*** electric charge parameters," "***an*** electric vehicle," "***a*** memory storage device," "***a*** touch-sensitive user interface," "***a*** webpage," and "***a*** vehicle charge indicator element" having "***a*** first portion" and "***a*** second portion indicative of ***an*** uncharged capacity." But, none of these terms plausibly provide antecedent basis for "***the*** slider." Dkt. 1-2 at claim 14; Ehsani, ¶ 85. As Dr. Ehsani explains, a POSITA reading "the slider" would understand that it should refer to a specific slider introduced earlier in the claim. Ehsani, ¶ 84; *Sensor Elec. Tech., Inc. v. Bolb, Inc.*, No. 18-CV-05194-LHK, 2019 WL 4645338, at *31 (N.D. Cal. Sep. 24, 2019) ("an indefinite article (for instance, 'a' or 'an') must precede a claim term the first time the claim term is used in the claims … antecedent basis is necessary so that those with skill in the art can ascertain the scope of a patent and its claimed inventions"). But with no other reference to a slider appearing, the term fails to inform a POSITA of the metes and bounds of the claimed invention with reasonable certainty. Ehsani, ¶ 86; *see also Adaptix, Inc. v. Huawei Technologies Co. Ltd.*, 74 F. Supp. 3d 832, 838 (E.D. Tex. 2014)

(holding term indefinite because "set of candidate subcarriers" was not a reasonably clear antecedent basis for "each cluster").

F. "maintain an interior temperature of the electric vehicle suitable for a pet located within the electric vehicle" ('135 patent, claims 1, 8, 14)

Charge Fusion's Proposal	Tesla's Proposal
Plain and Ordinary meaning applies	Indefinite

While claim language employing terms of degree is not "inherently indefinite," such language must provide "enough certainty to one of skill in the art when read in the context of the invention." *Interval Licensing LLC v. AOL, Inc.*, 766 F.3d 1364, 1370 (Fed. Cir. 2014). It is not enough for a patent to merely identify "*some standard* for measuring the scope of the phrase." *Interval Licensing*, 766 F.3d at 1370-71. Instead, the intrinsic record must provide "'objective boundaries' with which to assess the term's scope." *In re Walter*, 698 F. App'x. 1022, 1026 (Fed. Cir. 2017); *see also Berkheimer v. HP Inc.*, 881 F.3d 1360, 1364 (Fed. Cir. 2018) ("Our case law is clear that the objective boundaries requirement applies to terms of degree").

The term "maintain an interior temperature of the electric vehicle suitable for a pet located within the electric vehicle" is indefinite because it is inherently a subjective term of degree and the patent fails to identify any objective boundaries for determining the suitability of the temperatures for a pet. *See* Ehsani, ¶¶ 91, 92, 94, 96, 97. For example, a suitable temperature may be one of a wide, undefined range of temperatures depending on whether "suitable" is defined as a temperature necessary to keep a pet alive, comfortable, uncomfortable, hot, warm, cold, cool, etc. Ehsani, ¶ 93. The scope of the term is further unbounded based on the wide-ranging types of "pets" one can have and the varying temperatures necessary for those pets to live or be in any other desired state of suitability. *Id.* On such questions, the intrinsic record does little to provide any answers or guidance to a POSITA. Ehsani, ¶ 91.

Indeed, the specification of the ’135 patent does not provide an objective standard for measuring whether a temperature is “suitable for a pet” and in fact injects further uncertainty about the scope of the term by using other, equally qualitative descriptors for the interior temperature of the vehicle. For example, the specification describes a “pet in car” button functioning to “maintain[] the comfort and safety of a pet left in a parked vehicle.” Dkt. 1-2 at 15:45-55. But this passage does not provide any clarity on the claim term at issue because temperatures that are both comfortable and safe for a pet have just as much variability as temperatures necessary to keep a pet alive. Ehsani, ¶ 95. Indeed, notions of “comfort and safety for a pet” are purely subject terms to the operator of the vehicle, who presumably owns the pet, as well as the pet itself. *Id*.

The specification further explains that maintaining a temperature that is comfortable and safe for a pet may be achieved by “keep[ing] the A/C on to maintain a cool vehicle” or “keep[ing] the heat on to maintain a warm vehicle.” Dkt. 1-2 at 15:52-53. While this disclosure indicates the mechanism (A/C and heat) by which the temperature is controlled, it only discloses that the vehicle may be maintained at a “cool” temperature or a “warm” temperature. *Id.*; Ehsani ¶ 96. These descriptions of the temperature to be maintained (i.e. “cool” and “warm”) are, again, terms of degree, particularly without objective guidance of, *e.g.*, the type of pet contemplated, that pet’s sense of cool/warm, external weather conditions that impact that sense, or the relevant season. Ehsani, ¶ 96. Put simply, nothing in the disclosures provide any objective standard for a POSITA to measure a given temperature relative to the type of pet and determine whether it is “suitable for a pet,” as claimed. *Interval Licensing*, 766 F.3d at 1371 (“Where, as here, we are faced with a “purely subjective” claim phrase, we must look to the written description for guidance….We find, however, that sufficient guidance is lacking in the written description of the asserted patents.”) (citations omitted); *Brazabra Corp. v. Ce Soir Lingerie Co., Inc.*, No. 1:18-CV-683-RP, 2019 WL

13136348, at *6 (W.D. Tex. Aug. 15, 2019) (holding term "a substantial area" indefinite where "the specification does not clarify the lower limit"); Ehsani, ¶ 96.

The specification also describes an alert feature where "the operator [can] be notified if the temperature inside the vehicle 660 climbs above seventy (70) degrees." Dkt. 1-2 at 13:48-51. This disclosure, however, only concerns triggering an alert to the user. Ehsani, ¶ 98. At best, the reference to 70 degrees is a specific temperature, but it is not a boundary temperature for what is suitable for a pet, and a POSITA would not understand it as such. *Id.* This is particularly so because 70 degrees may or may not be suitable for a pet depending on the type of pet and whether the temperature is meant to merely keep the pet alive or keep the pet comfortable and safe. *Id.* The patent acknowledges the variability in that calculus will conceptually depend on a variety of factors including, e.g., "the relevant seasons and/or external weather conditions." *Id.* at 15:45-55; Ehsani, ¶ 99. As Dr. Ehsani explains, the temperature at which an alert is triggered would be ideally calibrated to alert the driver *before* the temperature becomes unsuitable. Ehsani, ¶ 98. However, even reading 70 degrees as an example upper bound on a temperature suitable for a pet, this single example is insufficient to provide an objective standard for measuring whether other particular temperatures are "suitable for a pet." Ehsani, ¶ 99. Furthermore, even if the patent provided a single example temperature range on suitability for a pet (which it does not), one example of a "suitable" temperature range is insufficient to provide a POSITA with an objective standard to determine whether a temperature is suitable. *See id.*; *see also Interval Licensing*, 766 F.3d at 1373-74 (holding a term of degree indefinite where only a single example embodiment appeared in the specification); *Brazabra Corp.*, 2019 WL 13136348, at *6 (holding a term of degree indefinite where the specification provided only example embodiments). As Dr. Ehsani

explains, whether a temperature is suitable depends on contextual factors, and a single exemplary temperature is insufficient to define the term. *Id.*

An examination of the file history likewise fails to provide any guidance as to an objective standard for measuring whether a temperature is "suitable for a pet." *See* Ehsani, ¶ 100. The claim language "suitable for a pet" was first introduced as part of a July 17, 2020 Amendment as part of the limitation to "maintain a user specified interior temperature of the electric vehicle suitable for a pet located within the electric vehicle." Ex.[9] 1 at 2-4. As the applicants explained, this claim language contemplated maintaining a temperature "desired" by the user—an inherently subjective concept to begin with. *Id.* at 12. In the applicants' August 14, 2020 Supplemental Amendment, they eliminated the words "user specified" from the claims. Ex. 2 at 2, 4-6. And one month later, the claims were allowed with no further discussion by the examiner or the applicants of the meaning of "suitable for a pet," let alone an objective standard for measuring whether a temperature is "suitable." Ex. 3; Ehsani, ¶ 100.

Accordingly, because (1) "suitable for a pet" is a term of degree, and (2) there is no objective standard in the intrinsic record to measure the suitability of an interior temperature for a pet, the term "maintain an interior temperature of the electric vehicle suitable for a pet located within the electric vehicle" is indefinite. *See* Ehsani, ¶¶ 91, 92, 94 96.

G. "for a duration of time until the amount of charge residing in the battery reaches a predetermined level" ('135 patent, claim 1)

Charge Fusion's Proposal	**Tesla's Proposal**
Plain and Ordinary meaning applies	Indefinite. Alternatively, "for a duration of time until the battery level reaches the amount of charge specified by the slider"

[9] "Ex." herein refers to the exhibits attached to the Declaration of Michael J. Sebba In Support of Defendant Tesla, Inc.'s Claim Constructions, filed concurrently herewith.

The intrinsic record fails to provide reasonable certainty with respect to the scope of the phrase, "for a duration of time until the amount of charge residing in the battery reaches a predetermined level," thereby rendering it indefinite. In particular, the patent does not define or provide any guidance as to the predetermined level for the amount of charge in the vehicle battery up to which the climate control modality should operate, as recited in claim 1. Ehsani, ¶ 103. Nor does the patent clearly define who should be making such a determination. Indeed, the specification uses the terminology "level" and "predetermined" inconsistently to describe inapplicable embodiments. For example, the specification mentions an interface to set an alert so the operator can be "notified if the current charge level of the vehicle falls below a level that allows the air conditioning (A/C) to remain on for fifteen (15) minutes" and notes the ability of the operator to change a "predetermined" parameter such as "relax[ing] the maximum price for electricity attribute." Dkt. 1-2 at 20:13-16. The patent also mentions that a user can "establish[] and/or set[] charging parameters designed to keep the A/C on," but does so without ever mentioning what such parameters should be or how to determine them for that purpose. *Id.* at 15:45-55; Ehsani, ¶ 104. None of these passages directly speak to the claimed predetermined level of charge of the vehicle battery as it relates to the amount of time a climate control mechanism should operate. *Id.* Because a POSITA does not have any points of comparison, criteria, details, or examples in the specification, there is no objective boundary for the claim's scope. *See* Ehsani, ¶ 106; *Berkheimer*, 881 F.3d at 1364 (finding claim term indefinite because the "specification contains no point of comparison for skilled artisans to determine an objective boundary").[10]

[10] The file history does not add any clarity. There, the applicants merely acknowledges that it is "not desirable to either (1) charge the vehicle to the exclusion of maintaining a preferred interior temperature or (2) maintain a preferred interior temperature with the result being a vehicle that is insufficiently charged." Ex. 1 at 12. But it does not identify any specific predetermined level to balance between charging and discharging modalities or how to determine it. Ehsani, ¶ 105.

Alternatively, the only point in the claims where any level for the amount of charge of the vehicle battery is ever specified, is the "amount of charge" that is "specified by the slider." Ehsani, ¶ 107. As shown in the highlighted claim language, there is a relationship between the displayed user interface with a vehicle charge indicator element comprising a slider "by which **an amount of charge** may be specified," the receipt of "**<u>an</u> amount of charge specified by the slider**" that is used to "commence charging of the electric vehicle," and "**<u>the</u> amount of charge** residing in the battery" related to the operation of the claim control mechanism. Ehsani, ¶ 108. To the extent that "predetermined level" can be understood from the patent, a POSITA would understand that the commencement of charging raises the battery level, while the operation of climate control drains that battery level even during charging. Ehsani, ¶ 109. As such, the claim requirement that climate control operate until the amount of charge reaches a predetermined level could only refer back to the level specified by the slider, allowing the continued operation of climate control while the vehicle charges to the specified charge level. *Id.*

display via a user interface of a mobile device at least one of the one or more electric charge parameters wherein the user interface is adapted to display the one or more electric charge parameters as a vehicle charge indicator element comprising a first portion indicative of an amount of charge residing in a battery of the electric vehicle and a second portion indicative of an uncharged capacity of the battery of the electric vehicle and wherein the vehicle charge indicator element further comprises a slider by which an amount of charge may be specified;

receive an amount of charge specified by the slider;

commence charging of the electric vehicle in accordance with the received amount of charge;

* * *

operate a climate control mechanism of the electric vehicle while the vehicle is in a parked state and in accordance with the selected mode of operation for a duration of time until the amount of charge residing in the battery reaches a predetermined level.

H. "operating an A/C mechanism of the electric vehicle in accordance with the selected mode of operation" ('135 patent, claims 8)

Charge Fusion's Proposal	**Tesla's Proposal**
Plain and Ordinary meaning applies	Indefinite

The dispute between the parties concerns whether "operating an A/C mechanism of the electric vehicle in accordance with the selected mode of operation" in claim 8 of the '135 patent is definite. It is not. A claim term is indefinite if "read in light of the specification delineating the patent, and the prosecution history, [it] fail[s] to inform, with reasonable certainty, those skilled in

the art about the scope of the invention." *Nautilus*, 572 U.S. at 901. A POSITA would not be able to determine with reasonable certainty the scope of the term because the claims, specification, and prosecution history identify two distinct modes of operation without specifying the particular mode to which "the selected mode of operation" is referring. *See Bushnell Hawthorne*, 813 F. App'x at 526 (holding "said different IP address" as indefinite because the claim and specification fail to identify which of the three classes of IP address specified in the claim to which the "said different IP address" refers). Thus, the term is indefinite.

The first selected mode of operation, referred to herein as the "stored temperature mode," appears within the limitation "receiving **a selection of a mode of operation** of the electric vehicle that is **defined by a stored temperature at which the A/C is to be set to maintain the interior of the electric vehicle** while the vehicle remains in a parked state." Dkt. 1-2 at claim 8 (emphasis added); Ehsani, ¶ 113. The second selected mode of operation, referred to herein as "pet mode," appears within the limitation "displaying via the user interface an indication of a status of **a selected mode of operation** of the electric vehicle the selected mode of operation **operating to maintain an interior temperature of the electric vehicle suitable for a pet located** within the electric vehicle." Dkt. 1-2 at claim 8 (emphasis added); Ehsani, ¶ 114.

Both the stored temperature mode and pet mode are "a mode of operation" that the user may select. Dkt. 1-2 at 30:24-33. The specification supports the conclusion that the two modes are two different modes of operation. Ehsani, ¶ 115. In particular, the specification describes the stored temperature mode as "(iii) internal temperature thresholds e.g., minimum, maximum, and/or desired temperature thresholds" about which the user can receive alerts that identify when those thresholds are reached. Dkt. 1-2 at 15:32-41; Ehsani, ¶ 115. This reference is agnostic to the presence or type of any pet in the vehicle. Ehsani, ¶ 115. Conversely, the specification refers to

a pet mode that allows the user to "safely leave a pet in a parked vehicle by establishing and/or setting charging parameters designed to keep the A/C on to maintain a cool vehicle and/or to keep the heat on to maintain a warm vehicle." *Id.* at 15:50-53. Ehsani, ¶ 116. For pet mode, an operator may "determine whether it is desired [to] be notified if the current charge level of the vehicle 660 falls below a level that allows the Air Conditioning (A/C) to remain on for fifteen (15) minutes (e.g., the second preference option 684b)." *Id.* at 13:43-48; Ehsani, ¶ 116. This is further exemplified in Figure 7, which shows that the stored temperature mode and pet mode are two distinct modes of operation.

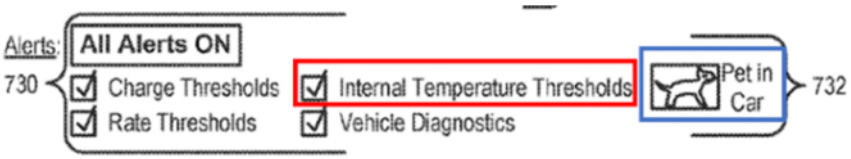

Ehsani, ¶¶ 117-118; Dkt. 1-2 at Fig. 7 (showing "internal temperature thresholds (in red)" and separately a "button" for "Pet in Car" (in blue)); 15:24-55.

The use of the definite article "the" in "operating an A/C mechanism of the electric vehicle in accordance with ***the*** selected mode of operation" further limits the claim language to one mode of operation. Ehsani, ¶ 119. A POSITA would not be informed with reasonable certainty which of the two selected modes of operation the A/C operation term is referring to in claim 8. *Id.* In other words, the term does not specify whether "the selected mode of operation" refers to the mode "defined by a stored temperature at which the A/C is to be set to maintain the interior of the electric vehicle" or the mode "operating to maintain an interior temperature of the electric vehicle suitable for a pet." *Id.* Courts have held that the inclusion of the definite article "the" references a specific limitation. *See, e.g., Bicon, Inc. v. Straumann Co.*, 441 F.3d 945, 954 (Fed. Cir. 2006) (finding that "the abutment" referred to a specific abutment, not any conceivable structure that could serve as an abutment); *Innovative Memory Sys., Inc. v. Micron Tech, Inc.*, 781 F. App'x 1013, 1016

(Fed. Cir. 2019) (identifying the difference between hypothetical claim language stating "a correspondence" versus the language of the claim stating "the correspondence").

The stored temperature mode and pet mode cannot be one in the same based on the specification. *See* Ehsani, ¶ 120. When describing pet mode, the specification states that "a user may safely leave a pet in a parked vehicle by establishing and/or setting charging parameters designed to keep the A/C on to maintain a cool vehicle and/or to keep the heat on to maintain a warm vehicle . . ." Dkt. 1-2 at 15:50-53. This requires that the user take the affirmative steps to set the charging parameters to operate the A/C or heat as needed for the pet. As the user must take the affirmative steps to set parameters for pet mode, it cannot be the same as the stored temperature mode. *See* Ehsani, ¶ 120. To say the stored temperature mode and pet mode are the same would read out and render pet mode superfluous, a "highly disfavored" result in claim construction. *Wasica Finance GmbH v. Continental Auto. Sys., Inc.*, 853 F.3d 1272, 1288 n.10 (Fed. Cir. 2017).

Similarly, pet mode cannot be a subset of the stored temperature mode. Ehsani, ¶ 120. As stated in the specification, when the user enables "All Alerts On," charge thresholds and internal temperature thresholds are activated. Dkt. 1-2 at 15:32-41; Ehsani, ¶ 120. However, when the user selects the "Pet in Car" button, the vehicle starts "charging parameters designed to keep the A/C on to maintain a cool vehicle and/or to keep the heat on to maintain a warm vehicle . . ." *Id.* at 15:50-53. Ehsani, ¶ 120. Thus, pet mode cannot be a subset of the stored temperature mode because they involve separate parameters activated separately from one another. Ehsani, ¶ 120.

The prosecution history of the '135 patent further supports the fact that the stored temperature mode and pet mode are two separate modes of operation. Ehsani, ¶ 121. As initially proposed by the patentees, claim 8 (originally drafted as claim 15) did not contain any mention of either selected modes of operation. Ehsani, ¶ 122; *see* Ex. 4 at 34. It was not until the patent

owner's July 17, 2020 amendment and response to the non-final office action mailed January 17, 2020 that the pet mode limitation was added. Ehsani, ¶ 122; *see* Ex. 1 at 3 (amending claim 15 to include "displaying via the user interface an indication of a status of **a selected mode of operation** of the electric vehicle **the selected mode of operation operating to maintain a user specified interior temperature of the electric vehicle suitable for a pet located within the electric vehicle**") (emphasis added). Then, following a July 30, 2020 interview with the Examiner, the patent owner filed a supplemental amendment and response to the non-final office action mailed January 17, 2020 that added the separate stored temperature mode limitation. Ehsani, ¶ 123; *see* Ex. 2 at 4 (amending claim 15 to also include "receiving **a selection of a mode of operation** of the electric vehicle **that is defined by a stored temperature at which the A/C is to be set to maintain the interior of the electric vehicle** while the vehicle remains in a parked state") (emphasis added). This supports the conclusion that these modes are two separate modes of operation. A POSITA would therefore be unable to reasonably determine the meaning of "operating an A/C mechanism of the electric vehicle in accordance with the selected mode of operation," and therefore the claim term is indefinite. Ehsani, ¶ 124.

I. "the selected mode of operation cannot be maintained by the amount of charge residing in the battery for more than a threshold amount of time" ('135 patent, claim 8) / "minimum battery charge level required to maintain the stored temperature for a threshold amount of time" ('135 patent, claim 14)

Charge Fusion's Proposal	Tesla's Proposal
Plain and Ordinary meaning applies	"the selected mode of operation cannot be maintained by the amount of charge residing in the battery for more than an amount of time greater than zero" / "minimum battery charge level required to maintain the stored temperature for an amount of time greater than zero"

The dispute between the parties concerns the meaning of the phrase "threshold amount of time" within the terms "the selected mode of operation cannot be maintained by the amount of

charge residing in the battery for more than a **threshold amount of time**" found within claim 8 of the '135 patent and "minimum battery charge level required to maintain the stored temperature for a **threshold amount of time**" found within claim 14 of the '135 patent. The patent's specification, claims, and file history demonstrate the phrase "threshold amount of time" in both terms mean "an amount of time greater than zero." Ehsani, ¶ 130.

In both claims, the reference to maintaining the stored temperature or mode of operation in the vehicle in relation to a "threshold amount of time" with respect to the minimum level of the vehicle battery charge logically requires that the time must be greater than zero. Ehsani, ¶ 131. A non-zero threshold would effectively vitiate the claimed minimum requirement. Indeed, even having a "minimum battery charge level" that is "required to maintain the stored temperature for a threshold amount of time" (as in claim 14, for instance) would be unnecessary if the threshold amount of time to maintain the stored temperature is zero. Ehsani, ¶ 132.

The specification confirms this understanding. For instance, the '135 patent describes vehicle alert features whereby the user can receive notifications if the "current charge level of the vehicle 660 falls below a level that allows the Air Conditioning (A/C) to remain on for fifteen (15) minutes." Dkt. 1-2 at 13:45-50; *see also id.* at 15:24-44; Fig. 7 (teaching that a user can specify alerts for charging thresholds, rate threshold, internal temperature thresholds, vehicle diagnostics and "pet in car" mode). The notification is based on charge preferences or parameters set by the user, *see id.* at 13:30-34, and plainly contemplates a threshold amount of battery charge greater than zero. Ehsani, ¶ 135. A POSITA would understand that there is a direct relationship between a 15-minute threshold for how much longer climate control can remain active and the amount of charge remaining in the battery to sustain that mode. *Id.* If the time threshold was zero or null,

then no minimum amount of charge is even necessary, which would render the claim limitations superfluous and nonsensical. Ehsani, ¶ 137.

The prosecution history of the '135 patent resolves any debate about this interpretation in Tesla's favor. On these claims, the applicants noted the operation of the electric vehicle "when electricity is being drawn from the battery to maintain a desired interior temperature for a pet." Ex. 1 at 12. The applicants explained that "[a]s it is not desirable to either (1) charge the vehicle to the exclusion of maintaining a preferred interior temperature or (2) maintain a preferred interior temperature with the result being a vehicle that is insufficiently charged, the ability to have displayed information indicative of each modality is of great benefit." *Id.* As part of this, the applicants emphasized the need to "monitor and react to a dynamic tug of war between charging and discharging modalities the result of which can spell life or death to, for example, a pet located within the vehicle." *Id.* at 8. Critical to this, the manner in which the "information is displayed [] allows one to make urgent accommodations if, for example, the interior of a vehicle is ***soon*** to rise to an unacceptable temperature." *Id.* at 12 (emphasis added). A POSITA would thus understand that if the "threshold amount of time" of vehicle battery charge to maintain an interior temperature was zero, any necessary responsive user modifications and accommodations to the vehicle behavior for that pet would be meaningless because at that point the vehicle battery would be completely discharged. Ehsani, ¶ 141. Only where the claimed threshold is non-zero (and the vehicle still powered) could an operator effectuate the modifications and accommodations emphasized during prosecution.

IV. CONCLUSION

For the above reasons, Tesla respectfully requests that the Court adopt its proposed constructions.

Dated: January 9, 2023

Respectfully Submitted,

/s/ Nicholas H. Lee

Michael A. Berta (admitted *pro hac vice*)
Ryan Casamiquela (admitted *pro hac vice*)
Kevin Cosgrove (admitted *pro hac vice*)
Francesco Mangini (admitted *pro hac vice*)
michael.berta@arnoldporter.com
ryan.casamiquela@arnoldporter.com
kevin.cosgrove@arnoldporter.com
francesco.mangini@arnoldporter.com
ARNOLD & PORTER KAYE SCHOLER LLP
Three Embarcadero Center
10th Floor
San Francisco, CA 94111-4024
Tel: 415-471-3100

Nicholas H. Lee (admitted *pro hac vice*)
Michael J. Sebba (admitted *pro hac vice*)
nicholas.lee@arnoldporter.com
michael.sebba@arnoldporter.com
ARNOLD & PORTER KAYE SCHOLER LLP
777 South Figueroa Street
44th Floor
Los Angeles, CA 90017-5844
Tel: 213-243-4000

Mark Samartino (admitted *pro hac vice*)
mark.samartino@arnoldporter.com
ARNOLD & PORTER KAYE SCHOLER LLP
70 West Madison Street
Suite 4200
Chicago, IL 60602-4231
Tel: 312-583-2300

Deron R. Dacus
SBN: 00790553
ddacus@dacusfirm.com
The Dacus Firm, P.C.
821 ESE Loop 323, Suite 430
Tyler, TX 75701
Tel: 903-581-2543

ATTORNEYS FOR TESLA, INC.

CERTIFICATE OF SERVICE

The undersigned hereby certifies that a true and correct copy of the above and foregoing document has been served on all counsel of record via the Court's ECF system.

/s/ Nicholas H. Lee
Nicholas H. Lee