US009620514B2

(12) **United States Patent**
Kai et al.

(10) **Patent No.: US 9,620,514 B2**
(45) **Date of Patent: Apr. 11, 2017**

(54) **3D SEMICIRCULAR VERTICAL NAND STRING WITH SELF ALIGNED FLOATING GATE OR CHARGE TRAP CELL MEMORY CELLS AND METHODS OF FABRICATING AND OPERATING THE SAME**

(71) Applicant: **SANDISK TECHNOLOGIES INC.**, Plano, TX (US)

(72) Inventors: **James K. Kai**, Santa Clara, CA (US); **Yanli Zhang**, San Jose, CA (US); **Henry Chien**, San Jose, CA (US); **Johann Alsmeier**, San Jose, CA (US)

(73) Assignee: **SANDISK TECHNOLOGIES LLC**, Plano, TX (US)

(*) Notice: Subject to any disclaimer, the term of this patent is extended or adjusted under 35 U.S.C. 154(b) by 0 days.

(21) Appl. No.: **14/748,575**

(22) Filed: **Jun. 24, 2015**

(65) **Prior Publication Data**

US 2016/0071860 A1 Mar. 10, 2016

Related U.S. Application Data

(60) Provisional application No. 62/046,412, filed on Sep. 5, 2014.

(51) **Int. Cl.**
H01L 27/115 (2006.01)
H01L 27/11556 (2017.01)
(Continued)

(52) **U.S. Cl.**
CPC ***H01L 27/11556*** (2013.01); ***G11C 16/0408*** (2013.01); ***H01L 27/1157*** (2013.01);
(Continued)

(58) **Field of Classification Search**
CPC H01L 27/11556
See application file for complete search history.

(56) **References Cited**

U.S. PATENT DOCUMENTS

5,915,167 A 6/1999 Leedy
7,575,973 B2 8/2009 Mokhlesi et al.
(Continued)

OTHER PUBLICATIONS

International Searching Report and Written Opinion of the International Searching Authority for PCT/US2015/042220, 24 pages, mailed Jan. 18, 2016.
(Continued)

Primary Examiner — Stephen W Smoot
(74) *Attorney, Agent, or Firm* — The Marbury Law Group PLLC

(57) **ABSTRACT**

A memory device includes a plurality of memory cells arranged in a string substantially perpendicular to the major surface of the substrate in a plurality of device levels, at least one first select gate electrode located between the major surface of the substrate and the plurality of memory cells, at least one second select gate electrode located above the plurality of memory cells, a semiconductor channel having a portion that extends vertically along a direction perpendicular to the major surface, a first memory film contacting a first side of the semiconductor channel, and a second memory film contacting a second side of the semiconductor channel. The second memory film is electrically isolated from the first memory film, and is located at a same level as the first memory film.

29 Claims, 26 Drawing Sheets

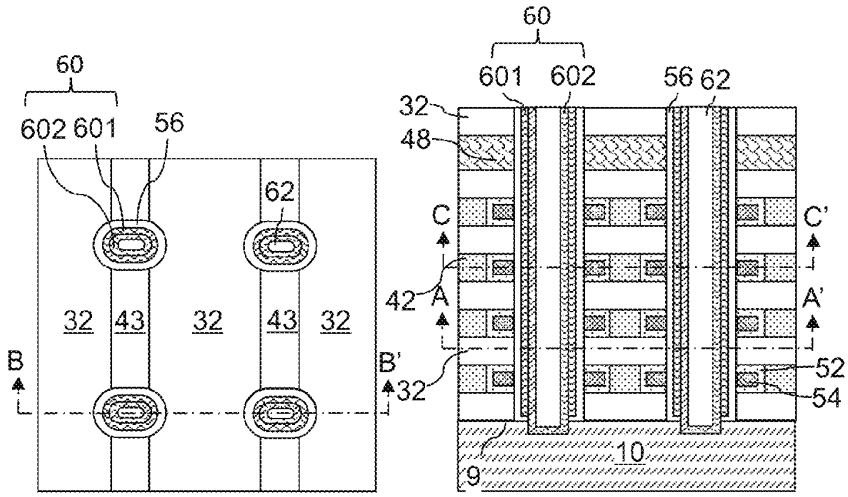

(51) **Int. Cl.**

H01L 27/11582	(2017.01)
H01L 27/11565	(2017.01)
H01L 27/11519	(2017.01)
G11C 16/04	(2006.01)
H01L 29/66	(2006.01)
H01L 27/11524	(2017.01)
H01L 27/1157	(2017.01)
G11C 16/14	(2006.01)

(52) **U.S. Cl.**
CPC .. ***H01L 27/11519*** (2013.01); ***H01L 27/11524*** (2013.01); ***H01L 27/11565*** (2013.01); ***H01L 27/11582*** (2013.01); ***H01L 29/66666*** (2013.01); ***H01L 29/66825*** (2013.01); *G11C 16/0483* (2013.01); *G11C 16/14* (2013.01)

(56) **References Cited**

U.S. PATENT DOCUMENTS

7,906,392	B2	3/2011	Dunton et al.	
8,084,819	B2 *	12/2011	Kim	H01L 27/11582 257/347
8,187,936	B2	5/2012	Alsmeier et al.	
8,461,641	B2	6/2013	Alsmeier et al.	
8,610,194	B2 *	12/2013	Aritome	H01L 27/11551 257/314
8,735,962	B2 *	5/2014	Whang	H01L 29/7889 257/321
8,767,465	B2 *	7/2014	Chang	H01L 21/28282 257/321
8,823,076	B2	9/2014	Lee et al.	
8,853,765	B2	10/2014	Lee et al.	
8,981,457	B2	3/2015	Lee et al.	
8,987,119	B2	3/2015	Dunton et al.	
9,023,719	B2	5/2015	Pachamuthu et al.	
2007/0029607	A1	2/2007	Kouznetzov	
2009/0230454	A1	9/2009	Pekny	
2010/0207194	A1	8/2010	Tanaka et al.	
2010/0213527	A1 *	8/2010	Shim	H01L 27/11565 257/314
2011/0156044	A1	6/2011	Lee et al.	
2012/0012921	A1	1/2012	Liu	
2012/0326221	A1 *	12/2012	Sinha	H01L 21/31111 257/315
2014/0131784	A1	5/2014	Davis et al.	
2015/0044833	A1	2/2015	Lee et al.	
2015/0076584	A1	3/2015	Pachamuthu et al.	
2015/0179660	A1	6/2015	Yada et al.	
2015/0255481	A1	9/2015	Baenninger et al.	
2015/0371709	A1 *	12/2015	Kai	G11C 16/0425 365/185.17
2016/0133642	A1 *	5/2016	Jeon	H01L 27/11565 257/325

OTHER PUBLICATIONS

U.S. Appl. No. 14/748,670, filed Jun. 24, 2015, SanDisk Technologies Inc.
U.S. Appl. No. 14/721,198, filed May 26, 2015, SanDisk Technologies Inc.
U.S. Appl. No. 14/317,274, filed Jun. 27, 2014, SanDisk Technologies Inc.
Invitation to Pay Additional Fees and Annex to Form PCT/ISA/206 Communication Relating to Results of the Partial International Search for PCT/US2015/042220, mailed Oct. 13, 2015.
Office Communication for U.S. Appl. No. 14/748,670, 21 pages, mailed Jul. 15, 2016.
U.S. Appl. No. 14/748,670, Office Action, issued Dec. 28, 2016, 13 pgs.

* cited by examiner

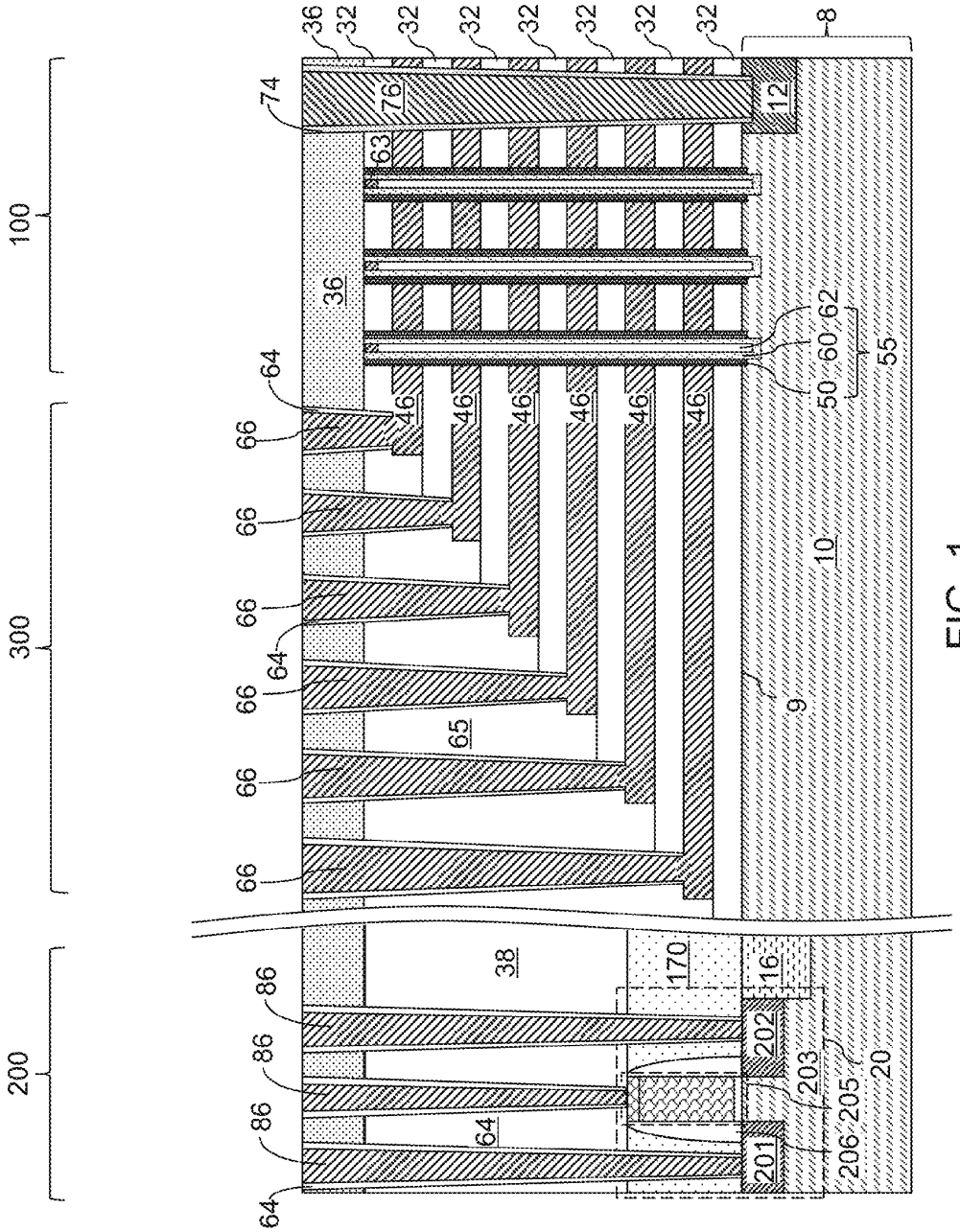
100
300
200
36
32
8
74
76
12
63
36
62
60
50
55
64
66
46
10
9
65
38
170
16
86
202
203
205
20
206
201

FIG. 1

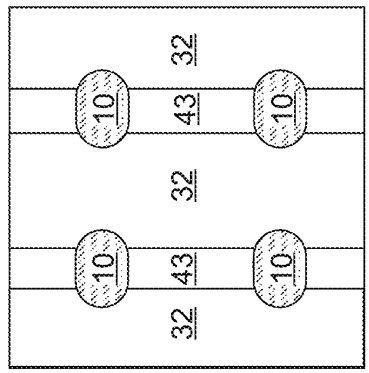

FIG. 4A

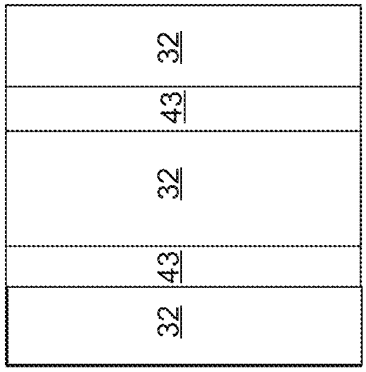

FIG. 3A

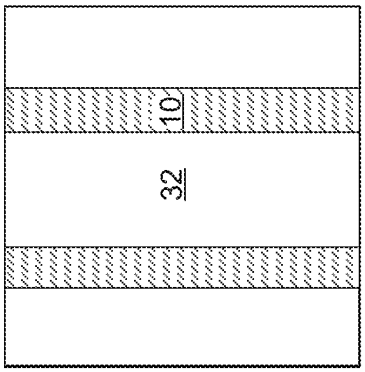

FIG. 2A

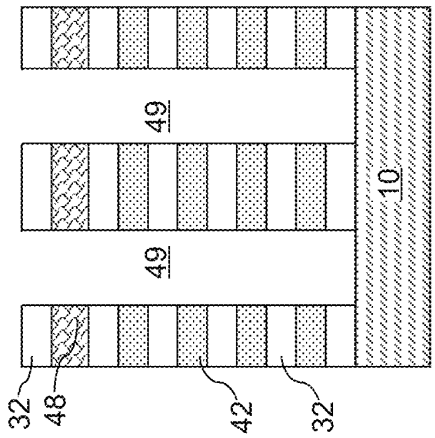

FIG. 4B

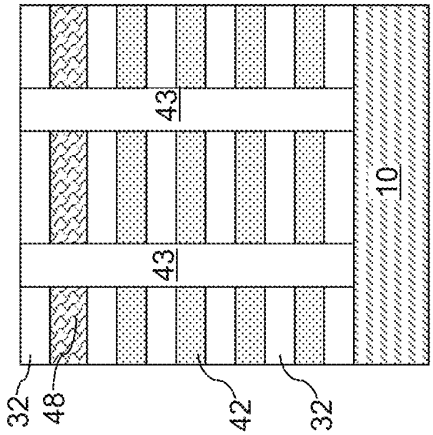

FIG. 3B

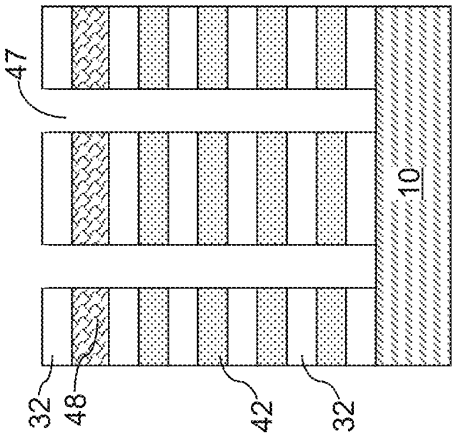

FIG. 2B

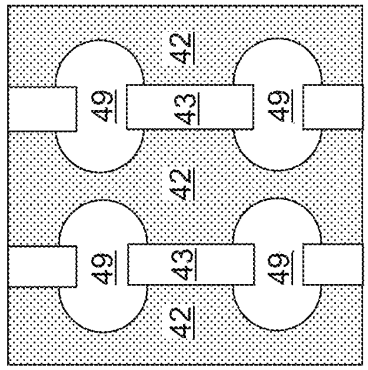

FIG. 5C

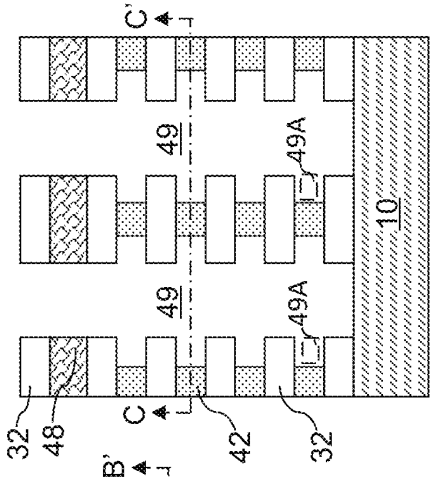

FIG. 5B

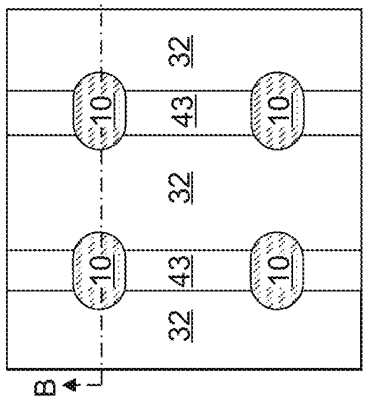

FIG. 5A

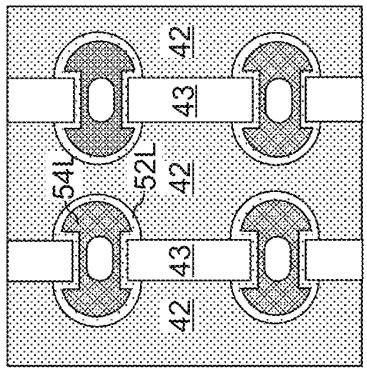

FIG. 6C

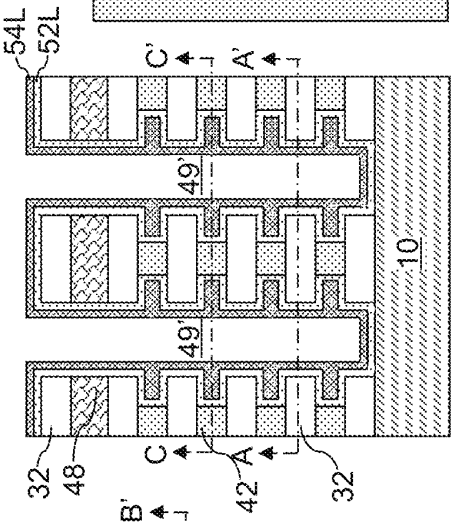

FIG. 6B

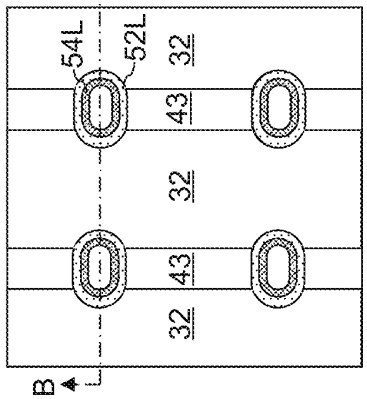

FIG. 6A

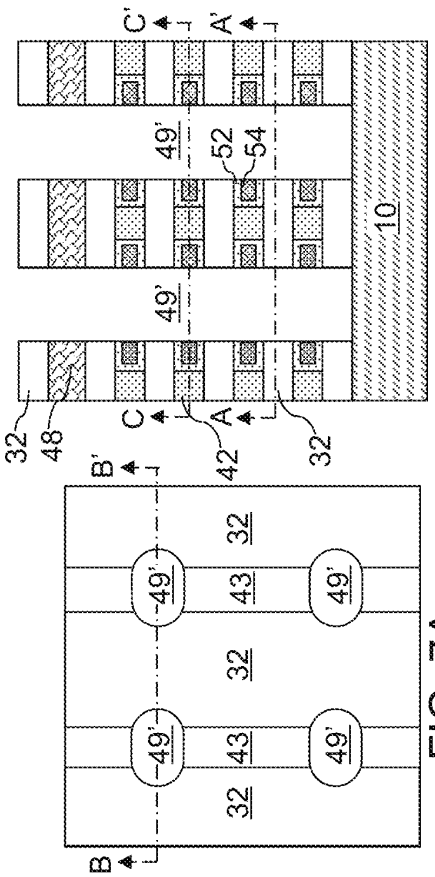

FIG. 7A

FIG. 7B

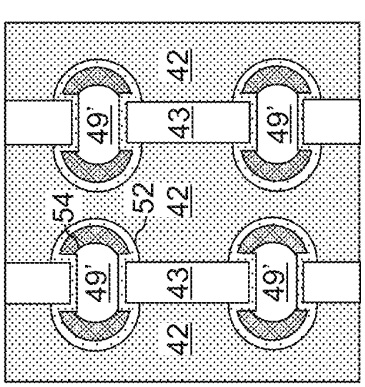

FIG. 7C

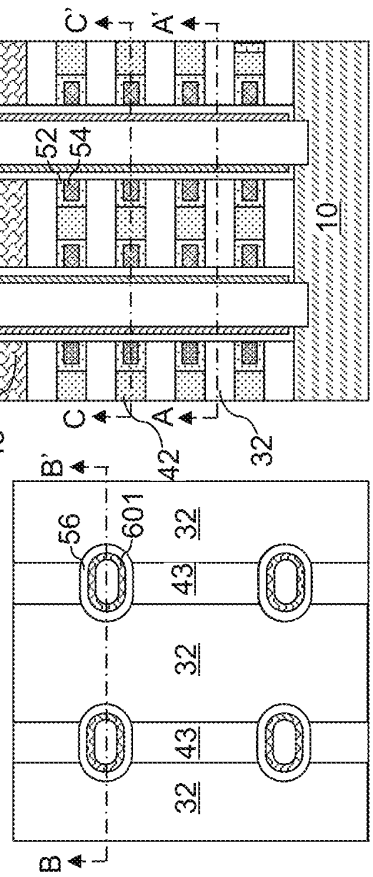

FIG. 8A

FIG. 8B

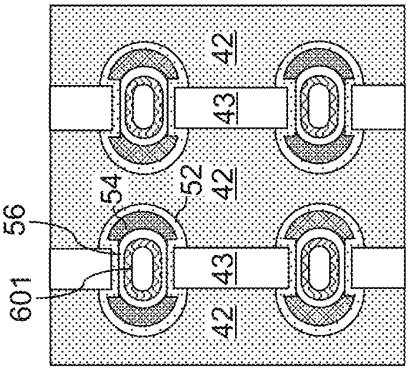

FIG. 8C

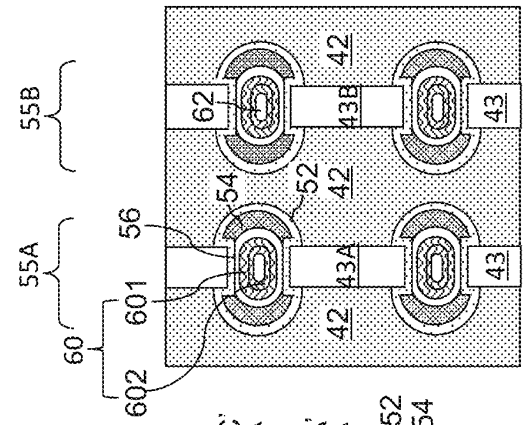

FIG. 9C

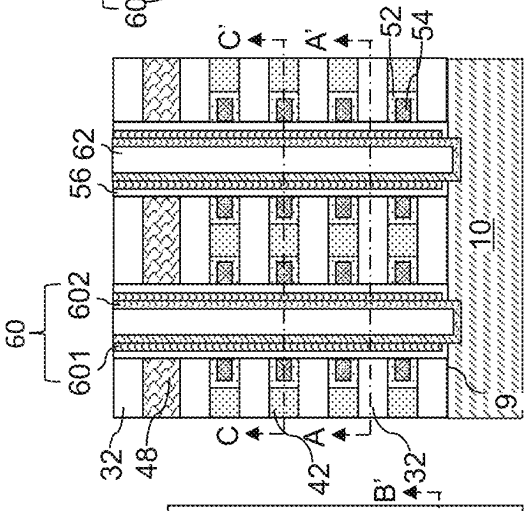

FIG. 9B

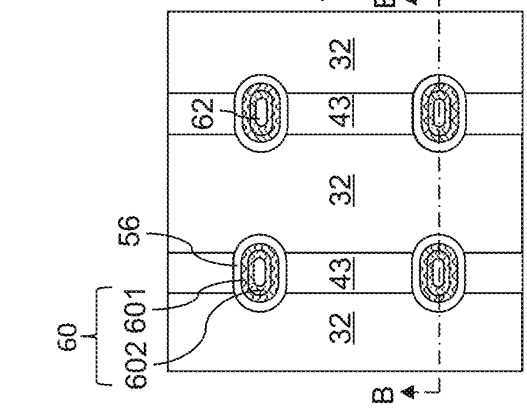

FIG. 9A

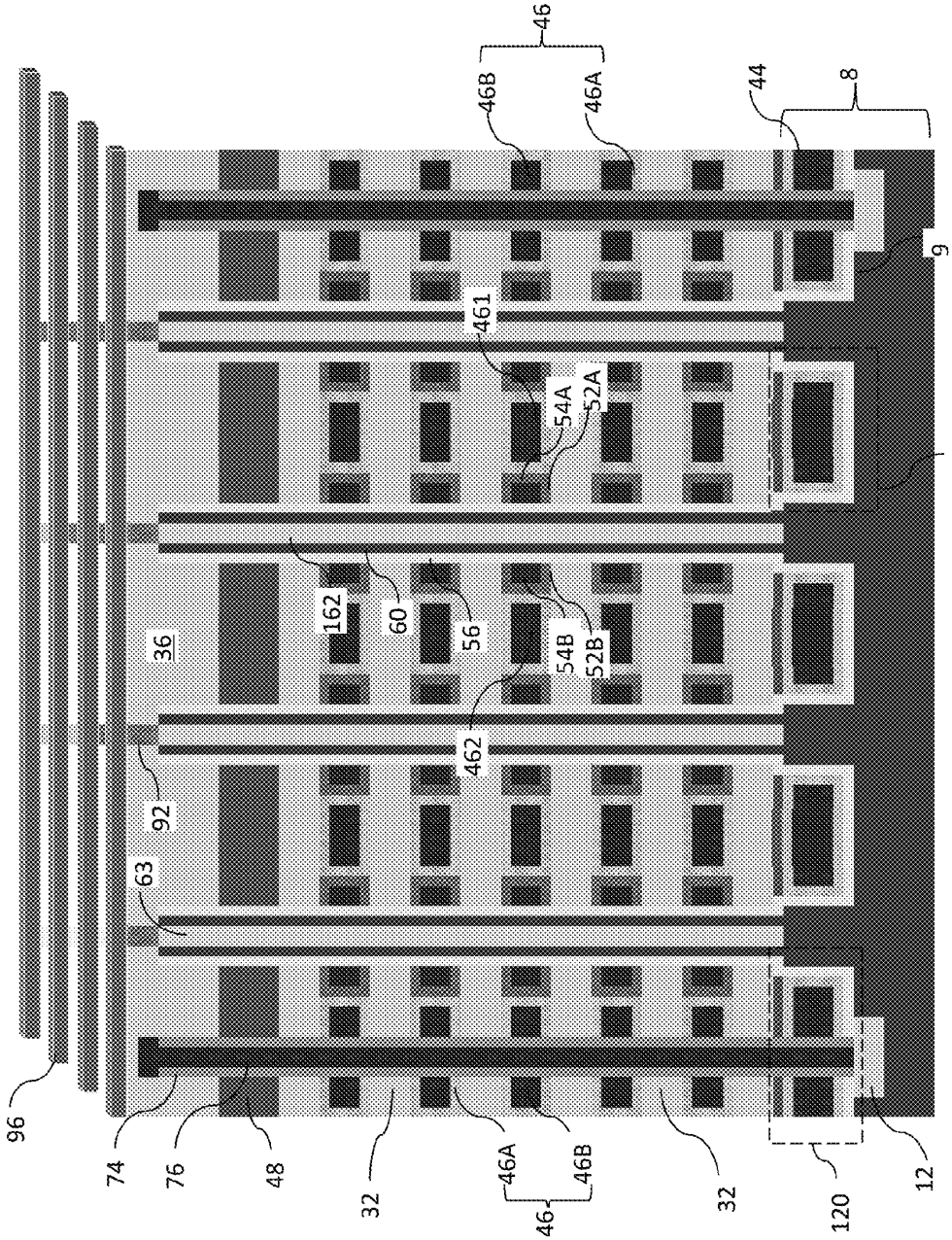
96
74
76
48
32
46A
46B
46
32
120
12
63
92
36
162
60
56
54B
52B
462
461
54A
52A
120
9
46B
46A
46
44
8

FIG. 10

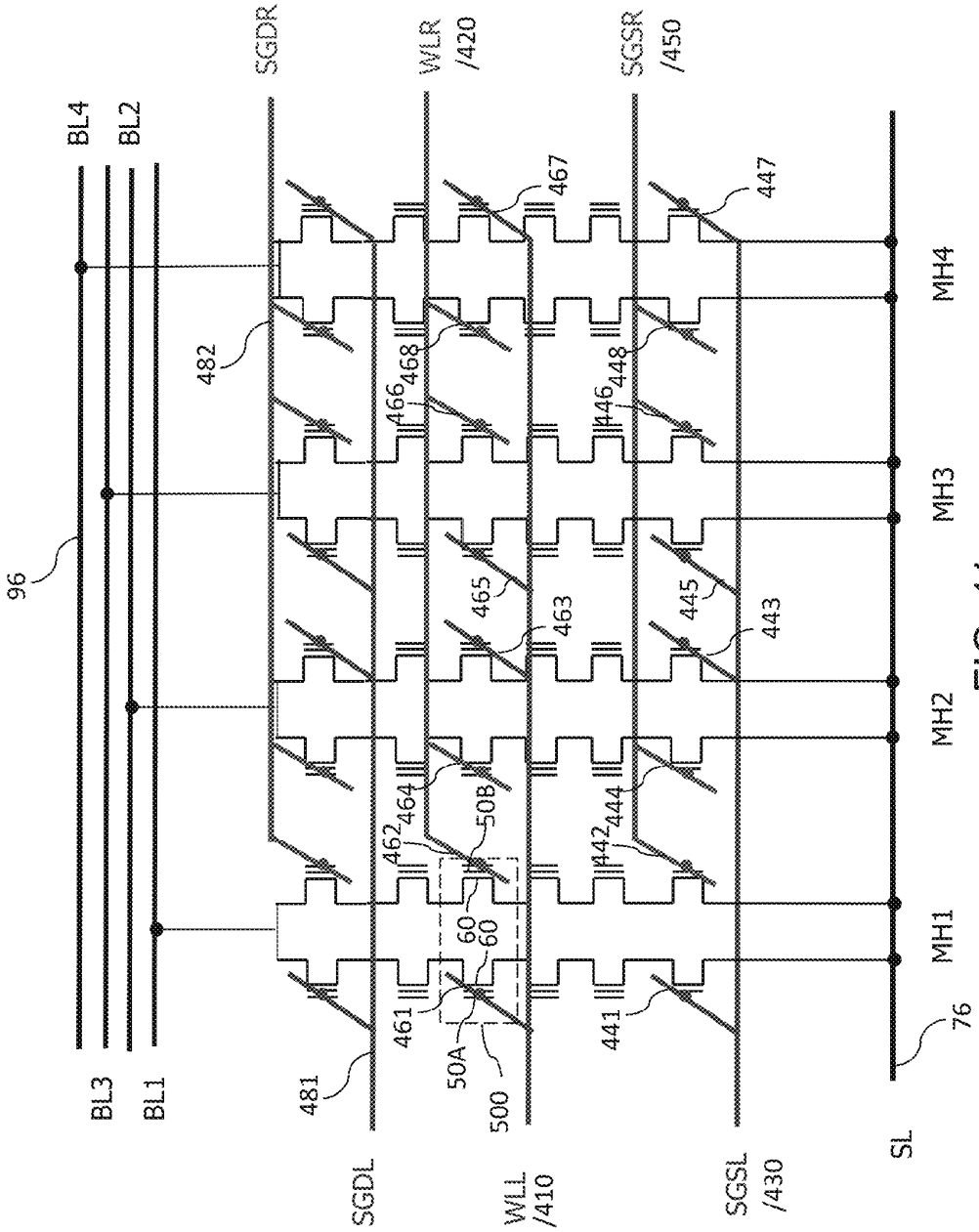
BL4
BL2
BL3
BL1
96
SGDR
WLR /420
SGSR /450
SGDL
WLL /410
SGSL /430
SL
482
481
467
468
466
465
464
463
462
461
447
448
446
445
444
443
442
441
50B
50A
500
60
60
76
MH4
MH3
MH2
MH1

FIG. 11

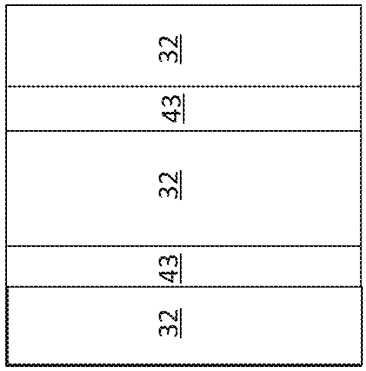

FIG. 13A

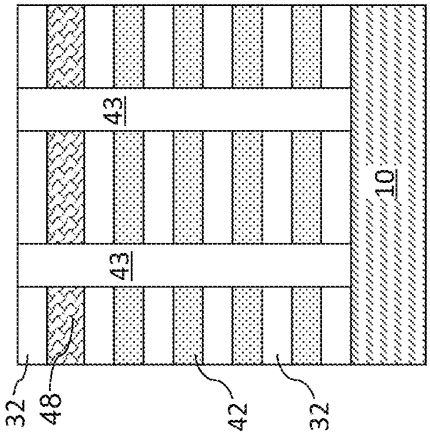

FIG. 13B

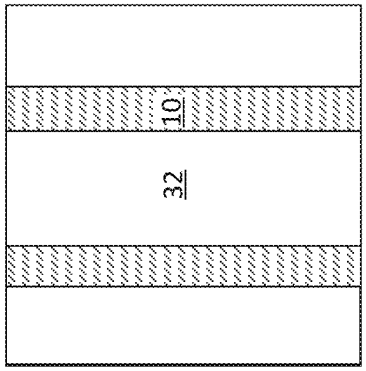

FIG. 12A

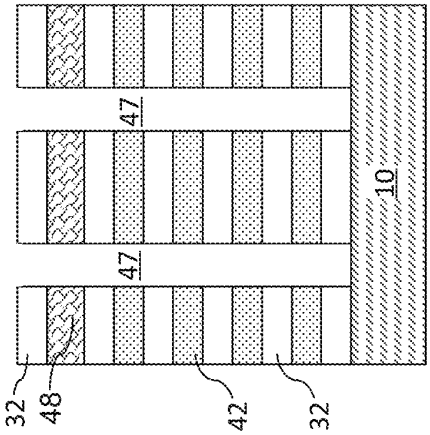

FIG. 12B

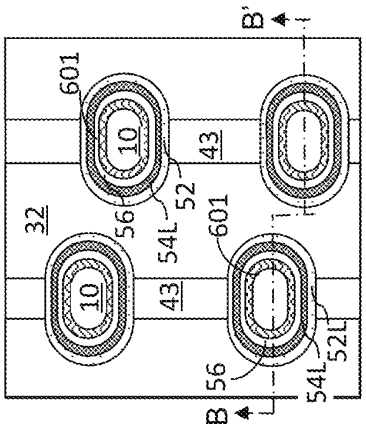

FIG. 14A

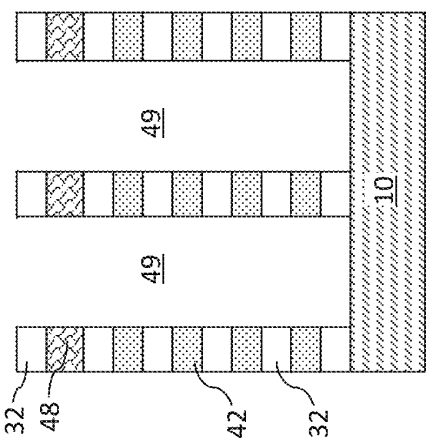

FIG. 14B

FIG. 15A

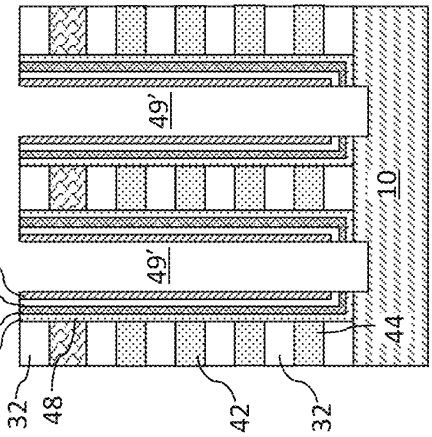

FIG. 15B

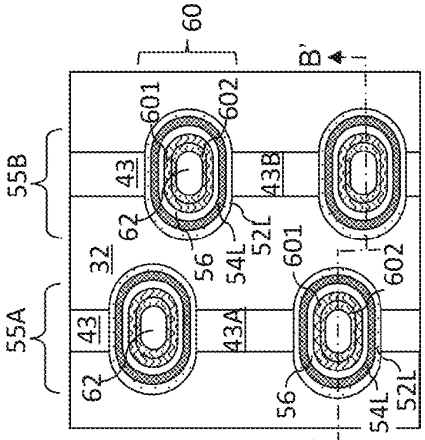

FIG. 17A

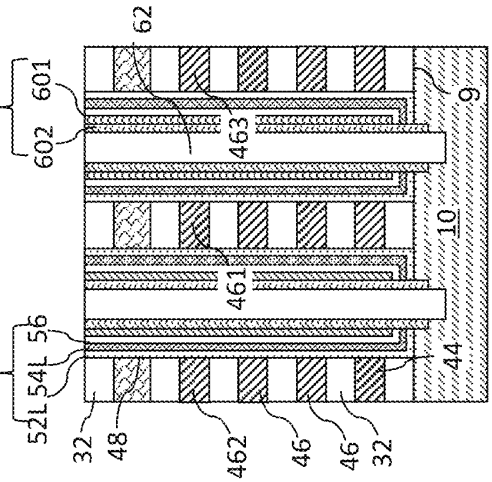

FIG. 17B

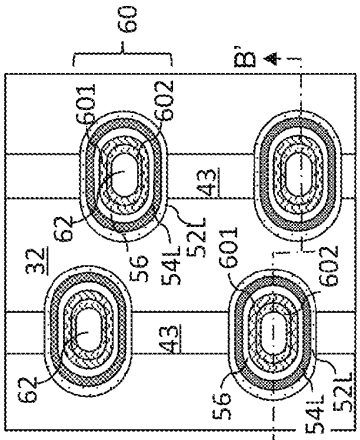

FIG. 16A

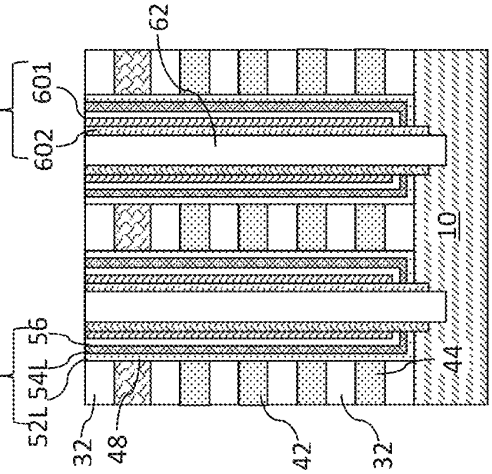

FIG. 16B

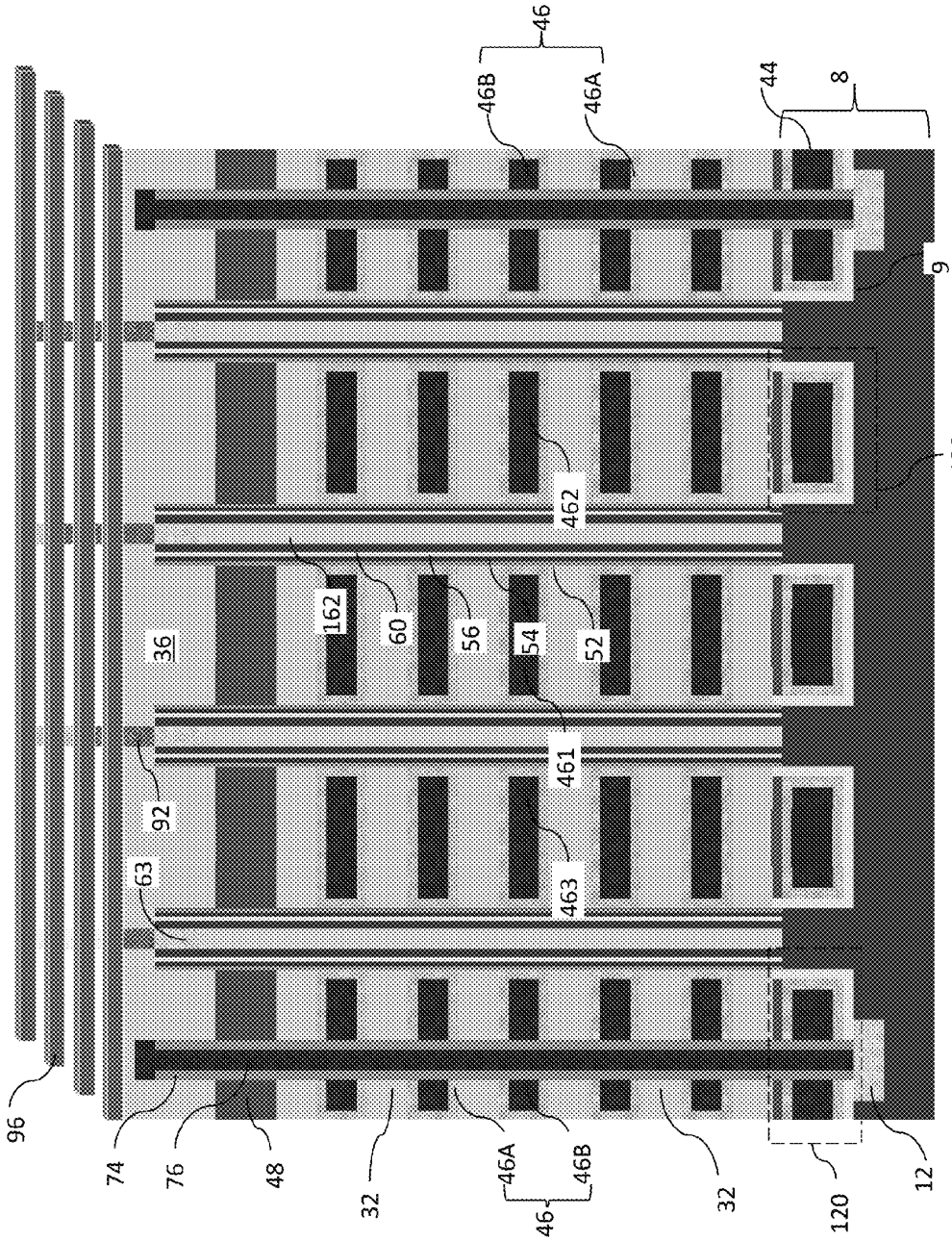
96
74
76
48
32
46A
46B
46
32
120
12
63
92
36
162
60
56
54
52
461
463
462
120
9
46B
46A
46
44
8

FIG. 18

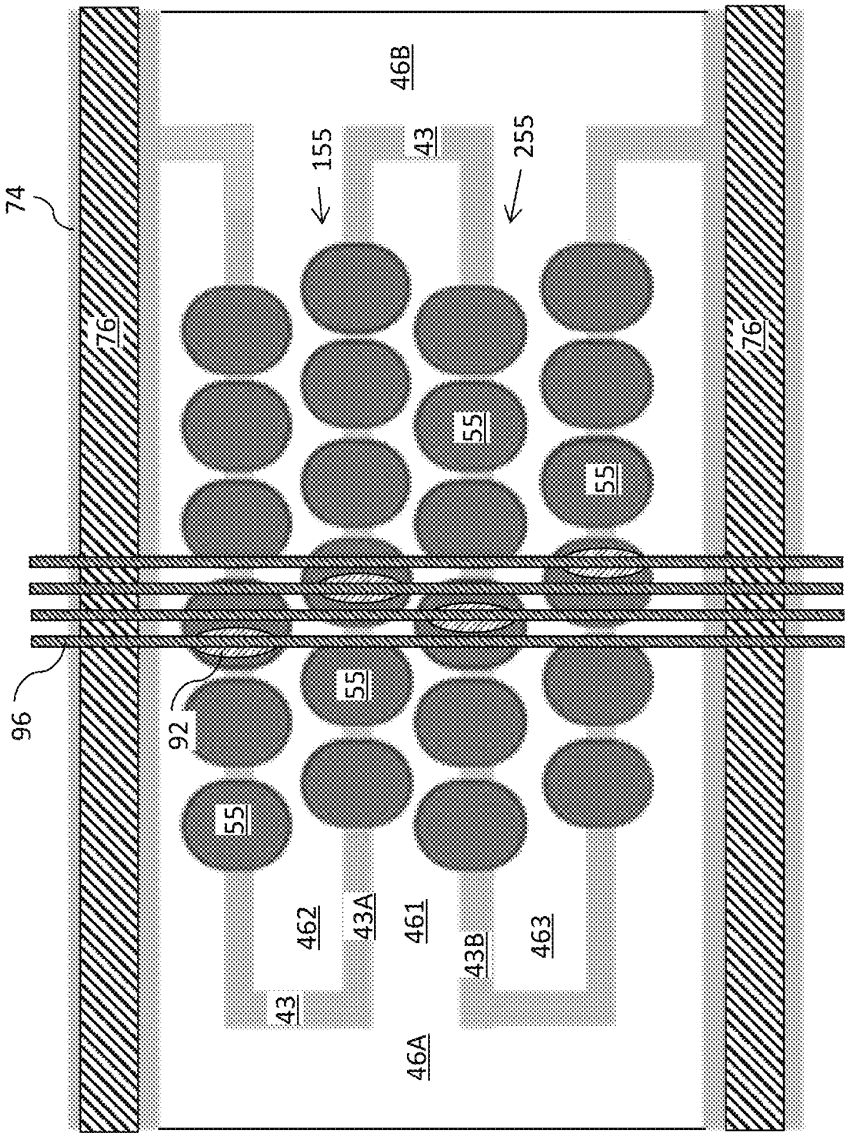

FIG. 19

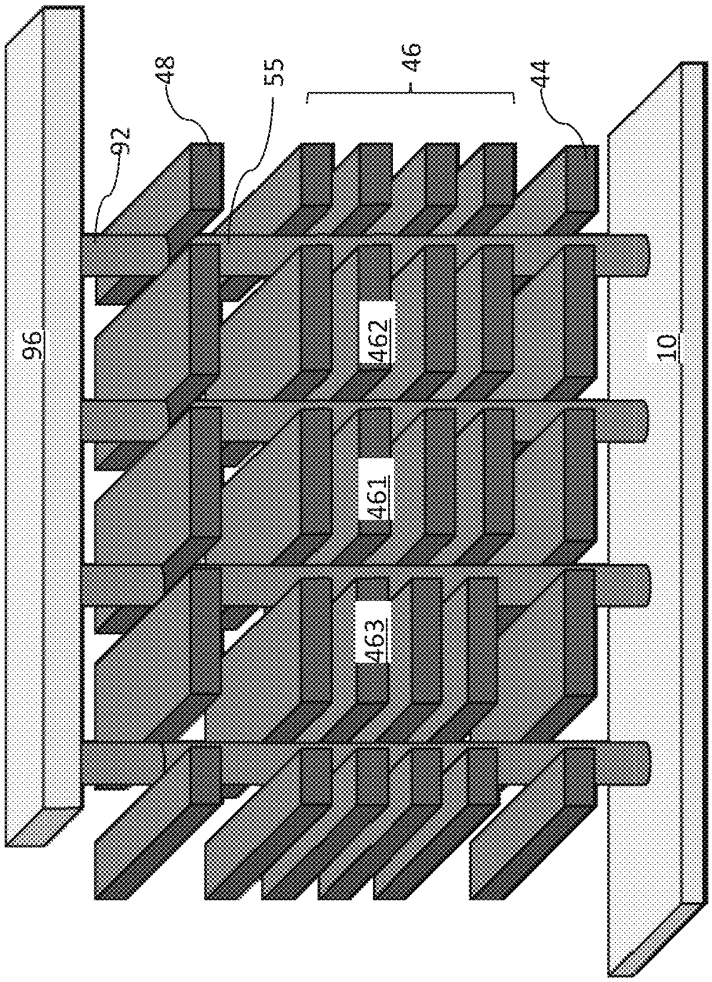

FIG. 20

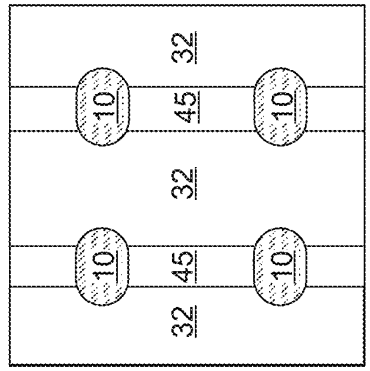

FIG. 23A

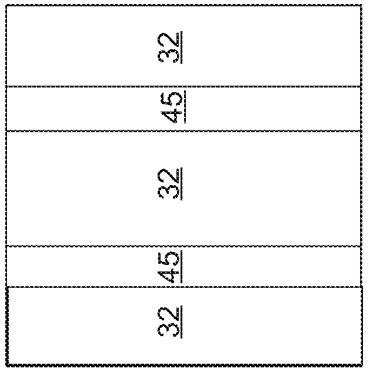

FIG. 22A

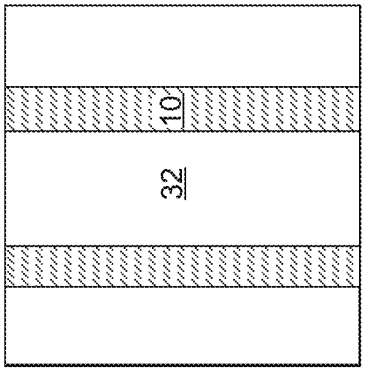

FIG. 21A

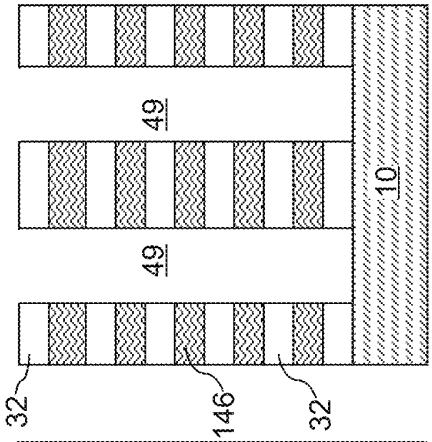

FIG. 23B

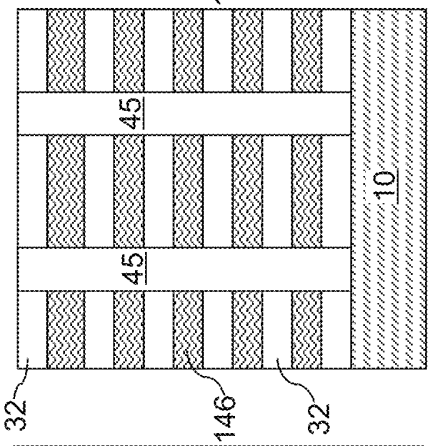

FIG. 22B

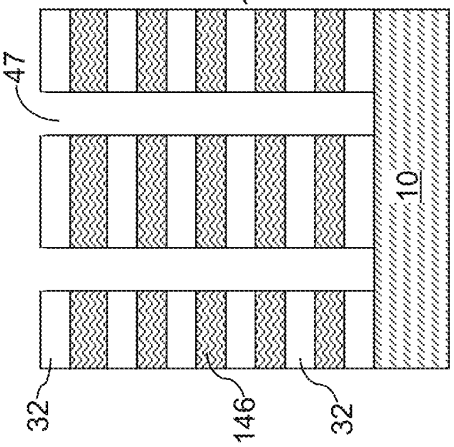

FIG. 21B

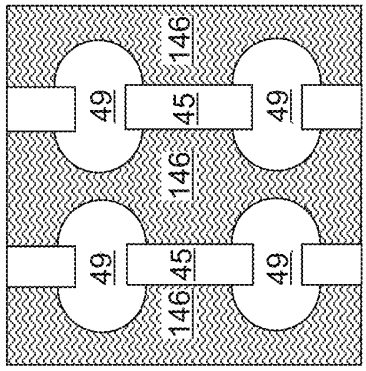

FIG. 24C

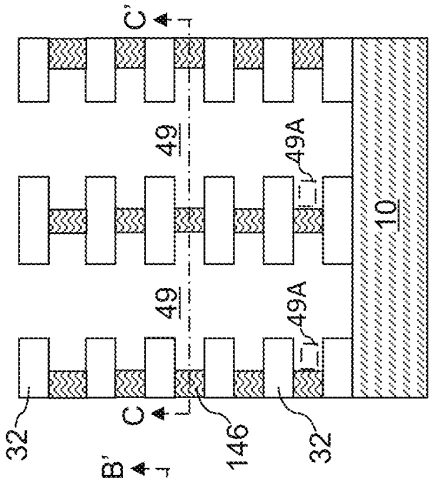

FIG. 24B

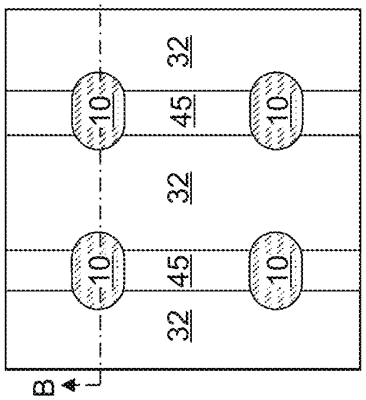

FIG. 24A

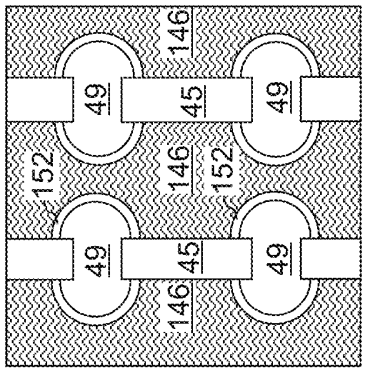

FIG. 25C

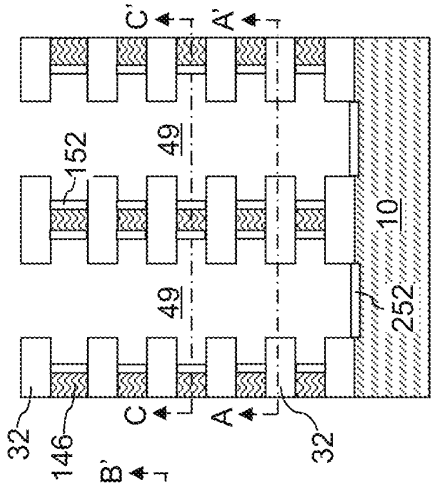

FIG. 25B

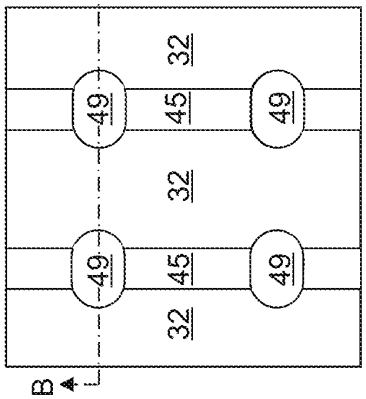

FIG. 25A

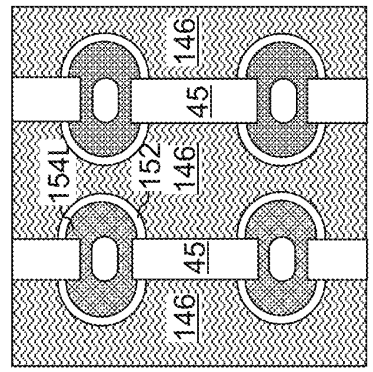

FIG. 26C

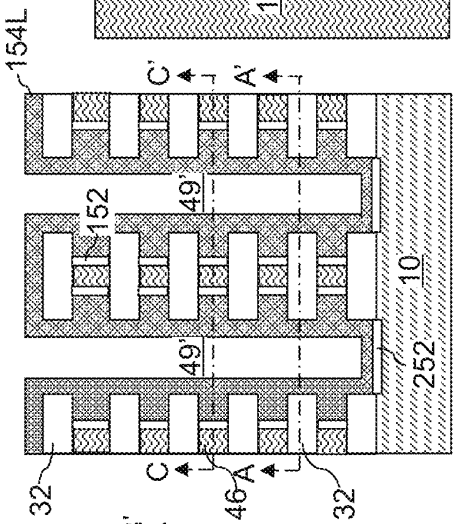

FIG. 26B

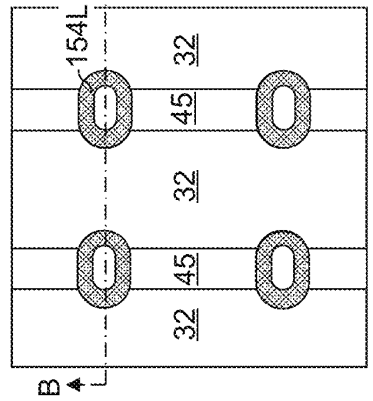

FIG. 26A

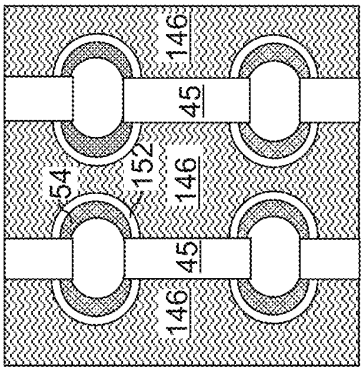

FIG. 27C

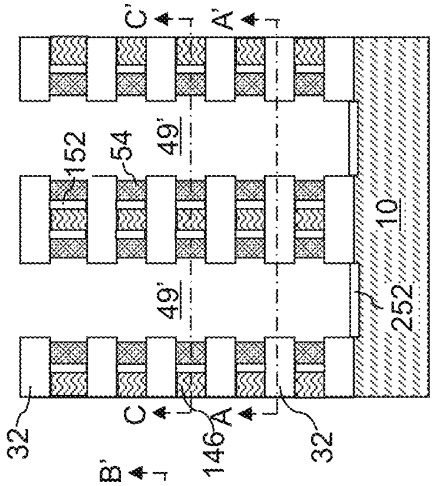

FIG. 27B

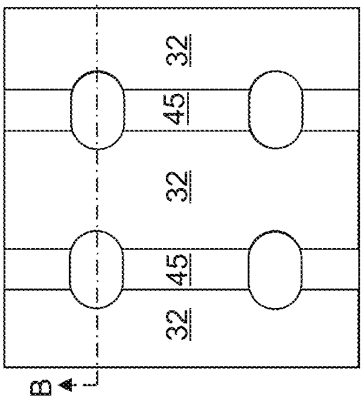

FIG. 27A

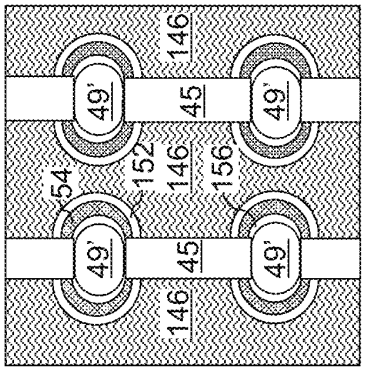

FIG. 28C

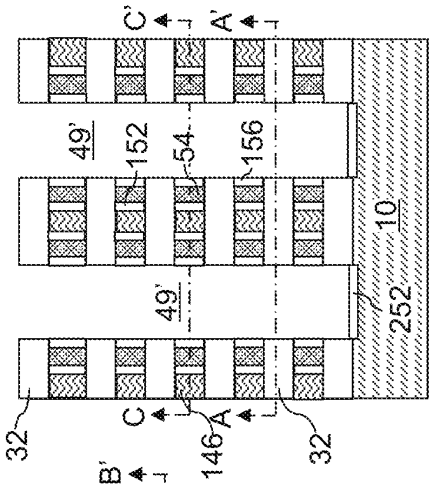

FIG. 28B

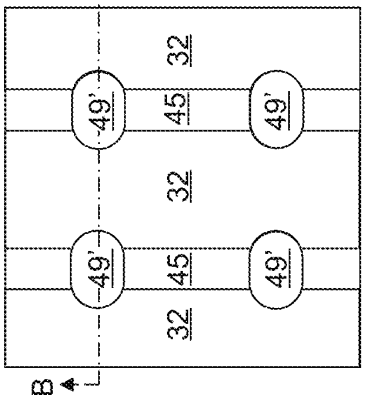

FIG. 28A

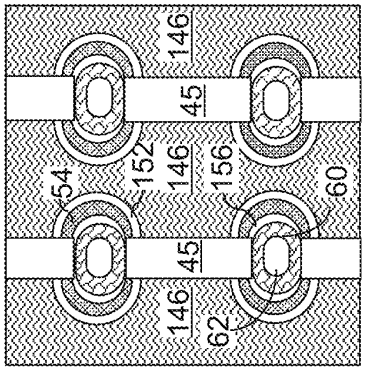

FIG. 29C

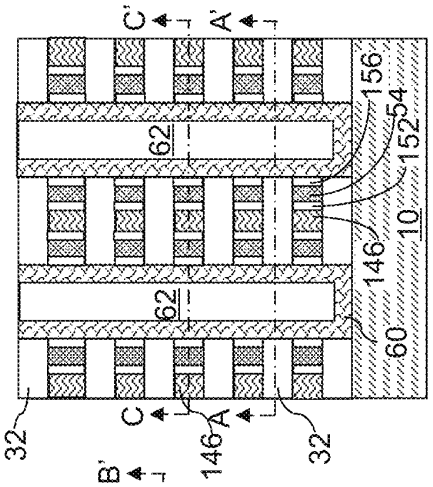

FIG. 29B

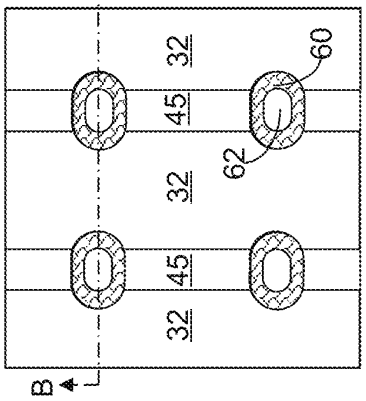

FIG. 29A

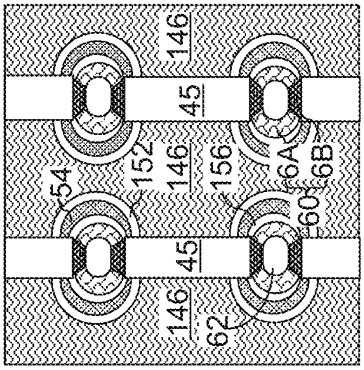

FIG. 30C

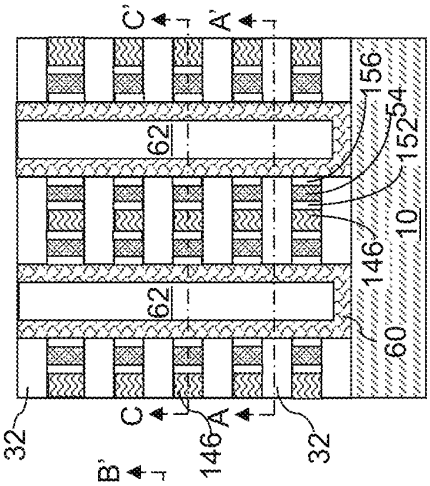

FIG. 30B

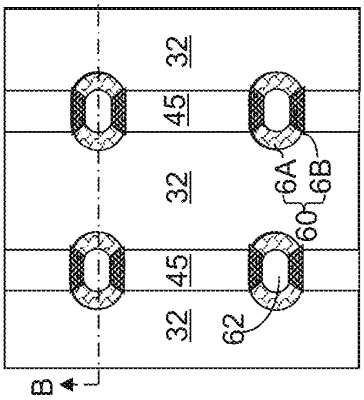

FIG. 30A

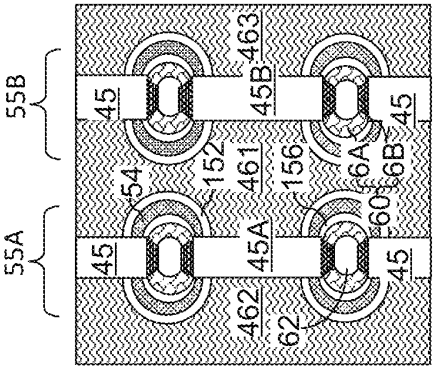

FIG. 31C

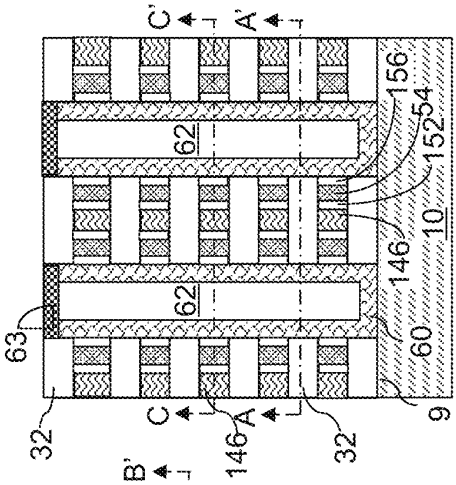

FIG. 31B

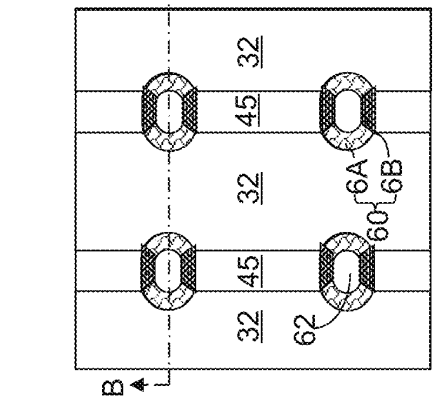

FIG. 31A

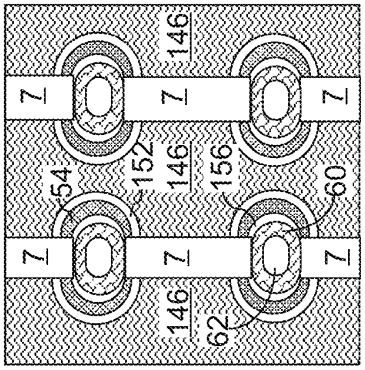

FIG. 32C

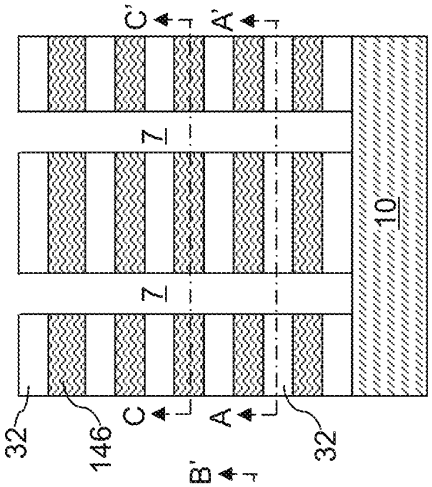

FIG. 32B

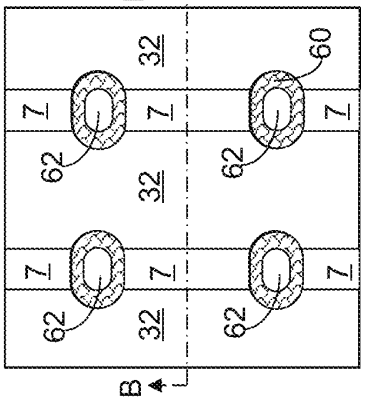

FIG. 32A

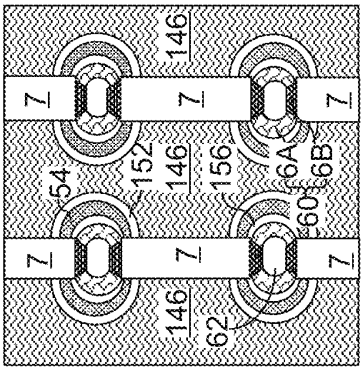

FIG. 33C

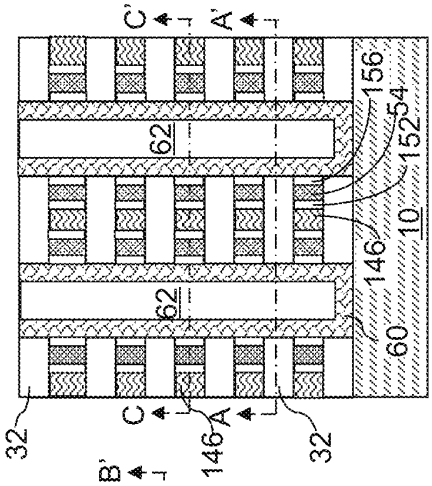

FIG. 33B

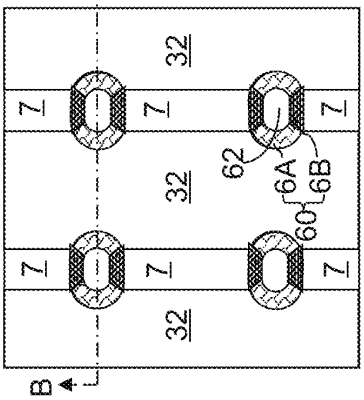

FIG. 33A

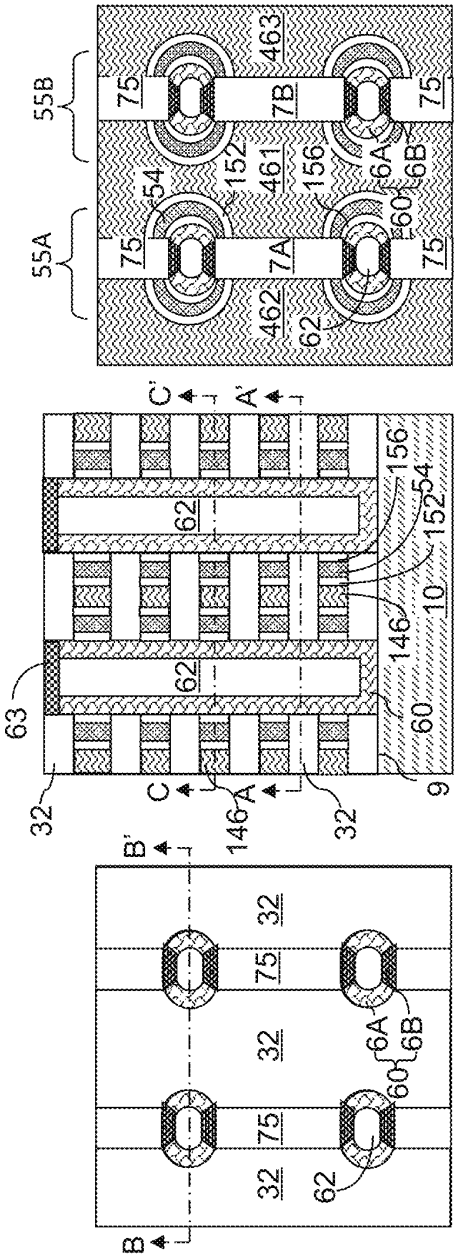

FIG. 34A

FIG. 34B

FIG. 34C

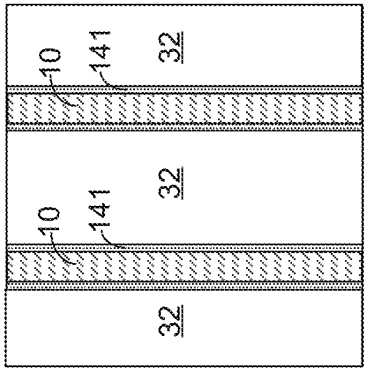

FIG. 36A

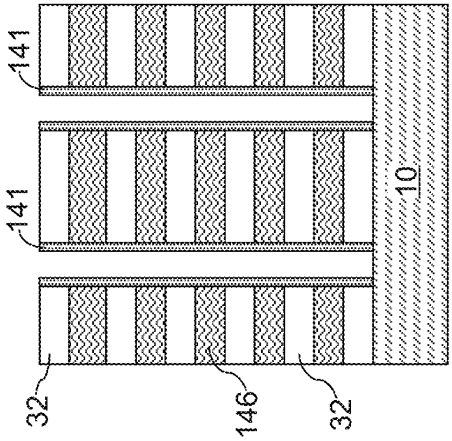

FIG. 36B

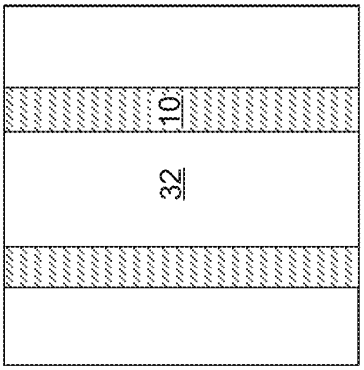

FIG. 35A

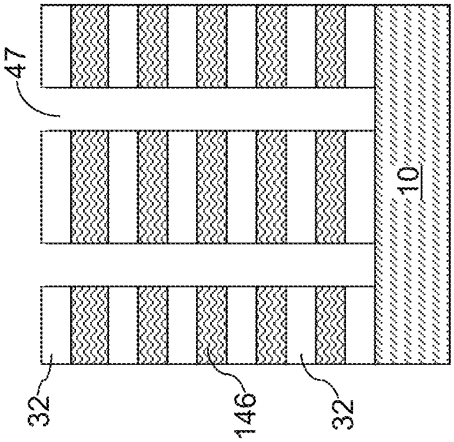

FIG. 35B

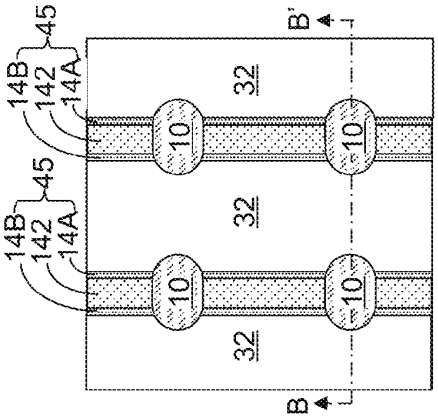

FIG. 38A

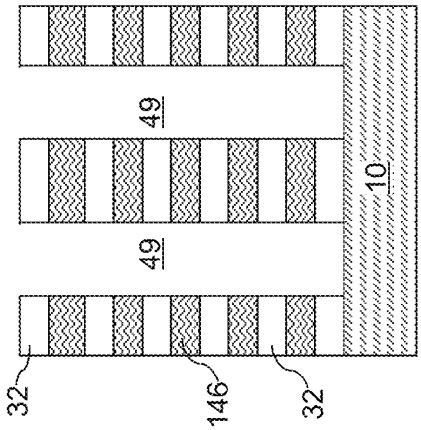

FIG. 38B

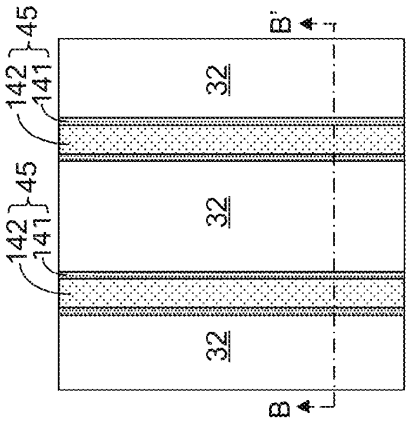

FIG. 37A

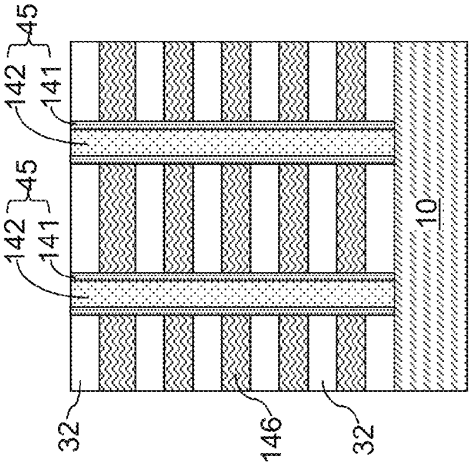

FIG. 37B

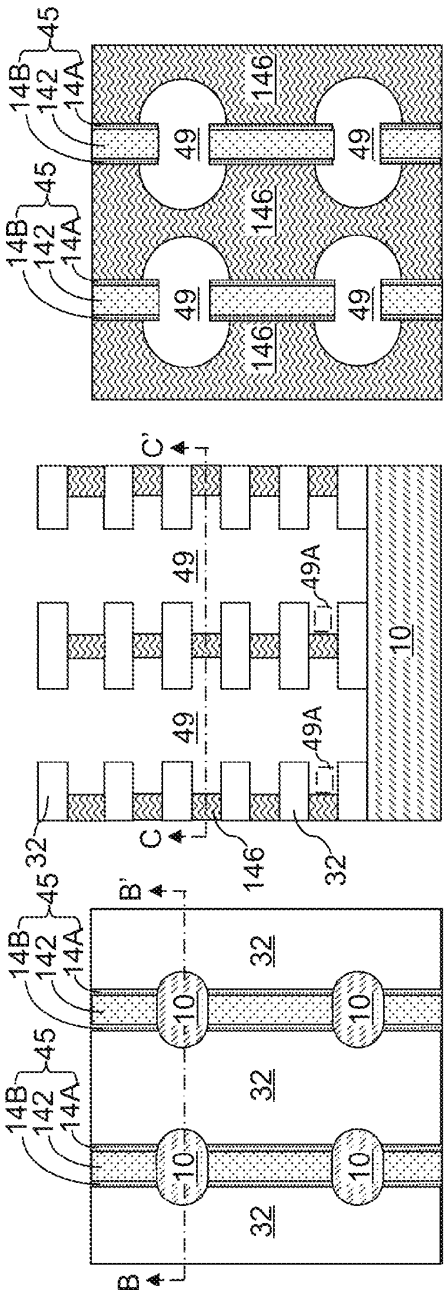

FIG. 39A

FIG. 39B

FIG. 39C

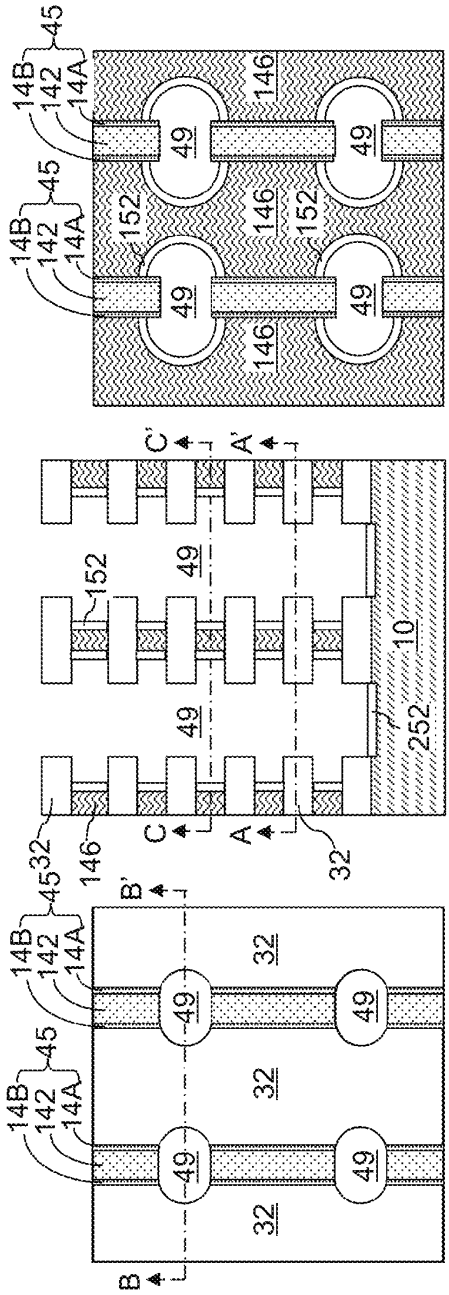

FIG. 40A

FIG. 40B

FIG. 40C

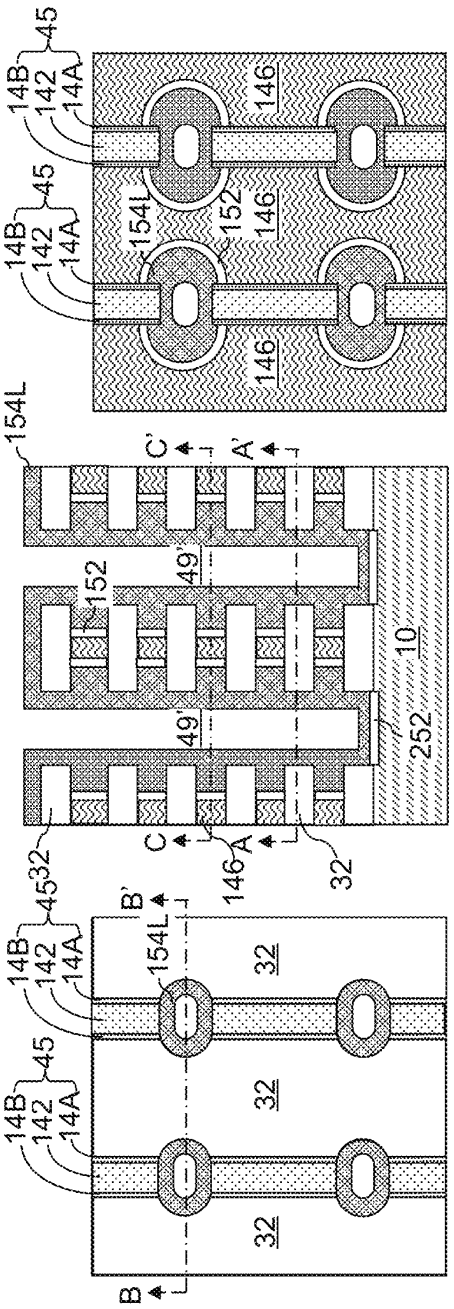

FIG. 41A

FIG. 41B

FIG. 41C

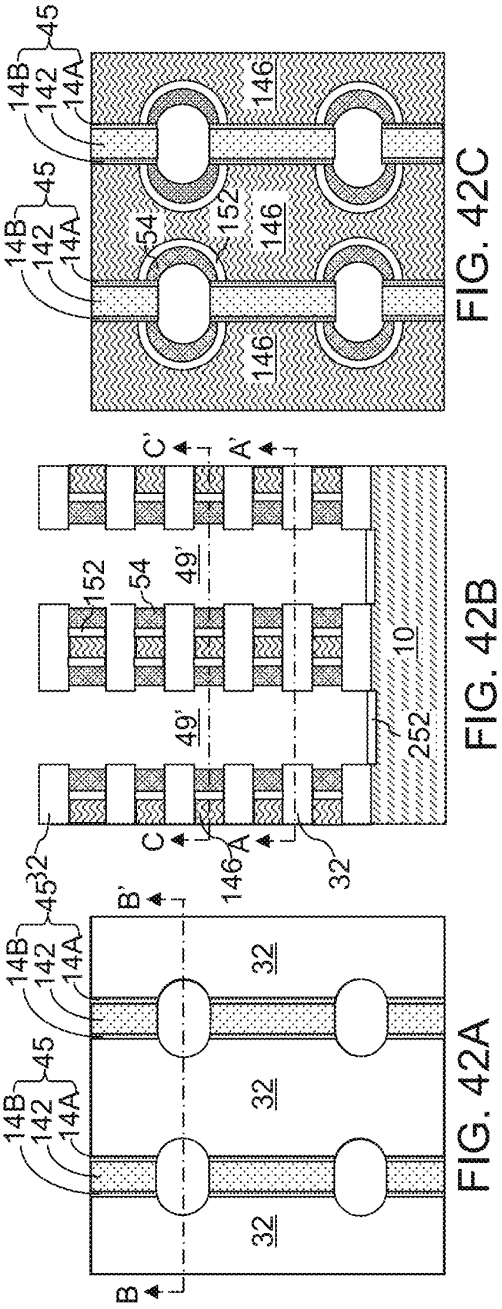

FIG. 42A

FIG. 42B

FIG. 42C

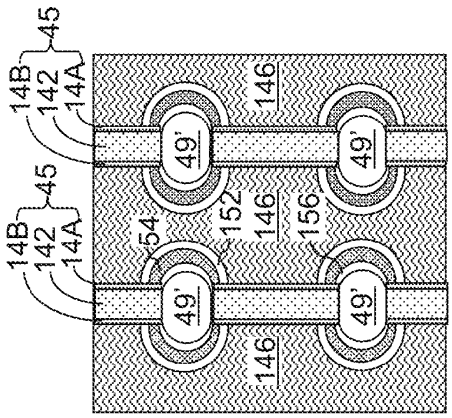

FIG. 43C

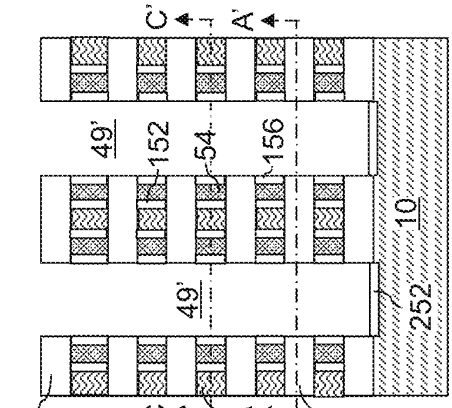

FIG. 43B

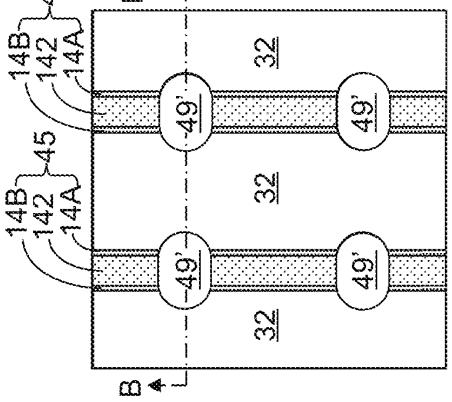

FIG. 43A

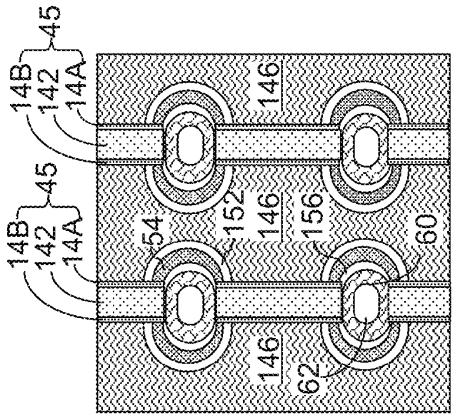

FIG. 44C

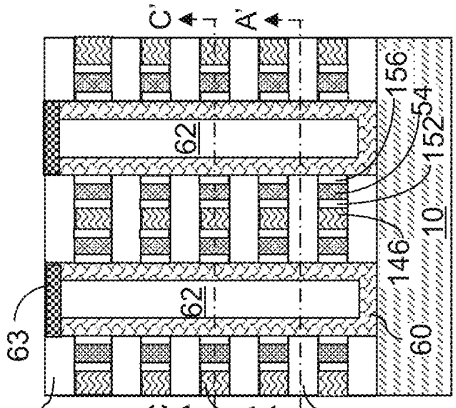

FIG. 44B

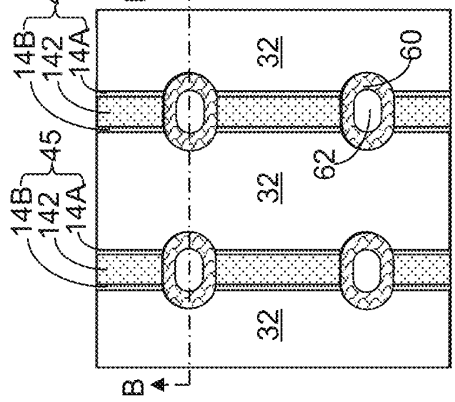

FIG. 44A

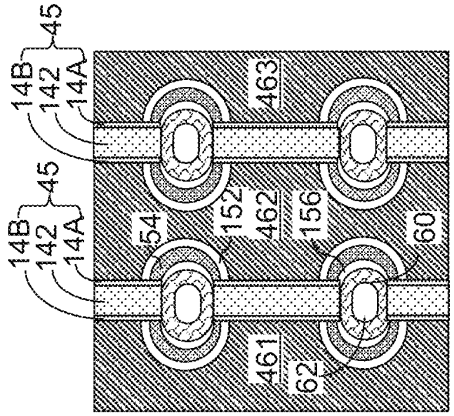

FIG. 45C

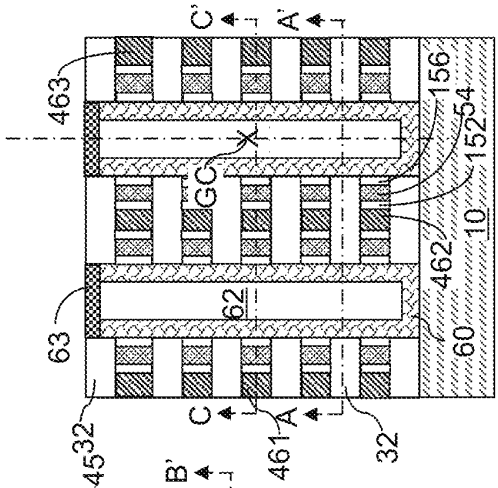

FIG. 45B

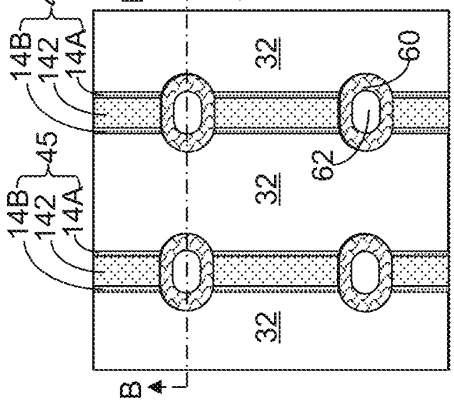

FIG. 45A

3D SEMICIRCULAR VERTICAL NAND STRING WITH SELF ALIGNED FLOATING GATE OR CHARGE TRAP CELL MEMORY CELLS AND METHODS OF FABRICATING AND OPERATING THE SAME

RELATED APPLICATIONS

This application claims the benefit of priority of U.S. Provisional Application No. 62/046,412 filed on Sep. 5, 2014, which is incorporated herein by reference in its entirety.

FIELD

The present disclosure relates generally to the field of semiconductor devices and specifically to three-dimensional non-volatile memory devices, such as vertical NAND strings and other three-dimensional devices, and methods of making the same.

BACKGROUND

Recently, ultra high density storage devices have been proposed using a three-dimensional (3D) stacked memory stack structure sometimes referred to as a Bit Cost Scalable (BiCS) architecture. For example, a 3D NAND stacked memory device can be formed from an array of alternating conductive and dielectric layers. A memory opening is formed through the layers to define many memory layers simultaneously. A NAND string is then formed by filling the memory opening with appropriate materials. A straight NAND string extends in one memory opening, while a pipe- or U-shaped NAND string (p-BiCS) includes a pair of vertical columns of memory cells. Control gates of the memory cells may be provided by the conductive layers.

SUMMARY

According to an aspect of the present disclosure, a memory device includes a plurality of memory cells arranged in a string substantially perpendicular to the major surface of the substrate in a plurality of device levels, at least one first select gate electrode located between the major surface of the substrate and the plurality of memory cells, at least one second select gate electrode located above the plurality of memory cells, a semiconductor channel having a portion that extends vertically along a direction perpendicular to the major surface, a first charge storage element located on a first side of the semiconductor channel; and a second charge storage element located on a second side of the semiconductor channel and located at a same level as the first charge storage element. The second charge storage element is electrically isolated from the first charge storage element, and located at a same level as the first charge storage element.

According to another aspect of the present disclosure a memory device includes an alternating stack of insulating layers and patterned electrically conductive layers located over a substrate a first pair of memory stack structures and a second pair of memory stack structures. Each memory stack structure comprises a plurality of memory cells arranged in a string extending in a first direction substantially perpendicular to the major surface of the substrate in a plurality of device levels, each of the plurality of memory cells is positioned in a respective one of the plurality of device levels above the substrate, and a semiconductor channel extends through all levels within the plurality of device levels in each memory stack structure. The device also includes a first separator insulator structure vertically extending through the stack and contacting the first pair of memory stack structures, and a second separator insulator structure vertically extending through the stack and contacting the second pair of memory stack structures. First control gate electrodes within the patterned electrically conductive layers contact the first and the second separator insulator structures, a first side of each memory stack structure within the first pair of memory stack structures, and a first side of each memory stack structure within the second pair of memory stack structures.

According to another aspect of the present disclosure, a method of making a memory device includes forming an alternating stack of insulating layers and material layers having a different composition from the insulating layers over a substrate, forming a separator trench through the alternating stack, wherein the alternating stack is divided into multiple laterally disjoined portions by the separator trench, forming a separator structure in the separator trench, and dividing the separator structure into the plurality of laterally spaced separator structures by forming memory openings therethrough. The method also includes selectively etching portions of the material layers with respect to the insulating layers from inside the memory opening, wherein a recess is formed at each level of the material layers, forming a pair of electrically isolated charge storage regions in each respective recess, forming a tunnel dielectric over the pairs of charge storage regions in the memory opening, and forming a semiconductor channel over the tunnel dielectric in the memory opening.

According to an aspect of the present disclosure, a memory device is provided, which includes a stack of alternating layers comprising insulating layers and control gate electrodes located over a substrate, a memory stack structure located within a memory opening extending through the stack and containing a semiconductor channel having a vertical portion that extends along a direction perpendicular to a top surface of the substrate, a dielectric separator structure which is located between and electrically isolates first control gate electrodes from second control gate electrodes in each device level, and at least one cell level isolation feature which electrically isolates lateral portions of the memory cell in each device level. The memory stack structure comprises at least two electrically isolated charge storage elements of the memory cell located around the semiconductor channel in each device level.

According to another aspect of the present disclosure a method of making a memory device comprises forming an alternating stack of insulating layers and material layers having a different composition from the insulating layers over a substrate, forming a separator trench that extends through the stack of alternating layers, wherein remaining portions of the stack of alternating layers are laterally spaced from each other by the separator trench, forming a dielectric spacer comprising a first dielectric material within the separator trench, filling a remaining portion of the separator trench with a second dielectric material to form a dielectric fill material portion, dividing a combination of the dielectric spacer and the dielectric fill material portion into multiple disjoined structures by forming at least one memory opening therethrough, and forming a memory stack structure within each of the at least one memory opening. Each remaining portion of the combination comprises a separator structure and patterned electrically conductive layers are provided at each level of the material layers by forming the material

layers as layers of a conductive material or by replacement of the material layers with at least one conductive material.

According to even another aspect of the present disclosure a method of operating a monolithic three dimensional NAND memory device, comprises injecting electrons into the separator structure during an erase operation of the device. The device comprises a stack of alternating layers comprising insulating layers and control gate electrodes located over a substrate, a memory stack structure located within a memory opening extending through the stack and containing a semiconductor channel having a vertical portion that extends along a direction perpendicular to a top surface of the substrate, and a separator structure which is located between and electrically isolates first control gate electrodes from second control gate electrodes in each device level.

According to yet another aspect of the present disclosure, a method of making a memory device comprises forming an alternating stack of insulating layers and material layers having a different composition from the insulating layers over a substrate, forming a plurality of separator structures laterally spaced by memory openings, each of the plurality of separator structures and memory openings extending through the alternating stack, forming a memory stack structure within each of the memory openings, each memory stack structure comprising a semiconductor channel having a vertical portion that extends along a direction perpendicular to a top surface of the substrate, and selectively doping the semiconductor channel to form a plurality of alternating base doping semiconductor channel portions and enhanced doping semiconductor channel portions located in the same device level. The plurality of enhanced doping semiconductor channel portions has a higher dopant concentration than the base doping semiconductor channel portions.

BRIEF DESCRIPTION OF THE DRAWINGS

FIG. **1** is a vertical cross-section of an exemplary device structure containing a 3D NAND stacked memory device according to embodiments of the present disclosure.

FIG. **2**A is a top-down view of a first exemplary device structure after formation of laterally-extending trenches according to a first embodiment of the present disclosure.

FIG. **2**B is a vertical cross-sectional view of the first exemplary device structure of FIG. **2**A.

FIG. **3**A is a top-down view of the first exemplary device structure after formation of separator insulator structures according to the first embodiment of the present disclosure.

FIG. **3**B is a vertical cross-sectional view of the first exemplary device structure of FIG. **3**A.

FIG. **4**A is a top-down view of the first exemplary device structure after formation of memory openings according to the first embodiment of the present disclosure.

FIG. **4**B is a vertical cross-sectional view of the first exemplary device structure of FIG. **4**A.

FIG. **5**A is a top-down view of the first exemplary device structure after selective lateral expansion of the memory openings according to the first embodiment of the present disclosure.

FIG. **5**B is a vertical cross-sectional view along the vertical plane B-B' of the first exemplary device structure of FIG. **5**A.

FIG. **5**C is a horizontal cross-sectional view of the first exemplary device structure along the horizontal plane C-C' of FIG. **5**B.

FIG. **6**A is a horizontal cross-sectional view of the first exemplary device structure after formation of a blocking dielectric layer and a charge storage material layer along the horizontal plane A-A' of FIG. **6**B according to the first embodiment of the present disclosure.

FIG. **6**B is a vertical cross-sectional view along the vertical plane B-B' of the first exemplary device structure of FIG. **6**A.

FIG. **6**C is a horizontal cross-sectional view of the first exemplary device structure along the horizontal plane C-C' of FIG. **6**B.

FIG. **7**A is a top-down view of the first exemplary device structure after formation of blocking dielectrics and charge storage material portions along the horizontal plane A-A' of FIG. **7**B according to the first embodiment of the present disclosure.

FIG. **7**B is a vertical cross-sectional view along the vertical plane B-B' of the first exemplary device structure of FIG. **7**A.

FIG. **7**C is a horizontal cross-sectional view of the first exemplary device structure along the horizontal plane C-C' of FIG. **7**B.

FIG. **8**A is a top-down view of the array region of the first exemplary device structure after formation of tunnel dielectrics and first semiconductor channels along the horizontal plane A-A' of FIG. **8**B according to the first embodiment of the present disclosure.

FIG. **8**B is a vertical cross-sectional view along the vertical plane B-B' of the first exemplary device structure of FIG. **8**A.

FIG. **8**C is a horizontal cross-sectional view of the first exemplary device structure along the horizontal plane C-C' of FIG. **8**B.

FIG. **9**A is a top-down view of the array region of the first exemplary device structure after formation of a second semiconductor channel and a dielectric core along the horizontal plane A-A' of FIG. **9**B according to the first embodiment of the present disclosure.

FIG. **9**B is a vertical cross-sectional view along the vertical plane B-B' of the first exemplary device structure of FIG. **9**A.

FIG. **9**C is a horizontal cross-sectional view of the first exemplary device structure along the horizontal plane C-C' of FIG. **9**B.

FIG. **10** is a vertical cross-sectional view of the first exemplary device structure after formation of bit lines according to the first embodiment of the present disclosure.

FIG. **11** is a circuit schematic for the array region of the first exemplary device structure.

FIG. **12**A is a top-down view of an array region of a second exemplary device structure after formation of laterally-extending trenches according to the second embodiment of the present disclosure.

FIG. **12**B is a vertical cross-sectional view of the second exemplary device structure of FIG. **12**A.

FIG. **13**A is a top-down view of the array region of the second exemplary device structure after formation of separator insulator structures according to a second embodiment of the present disclosure.

FIG. **13**B is a vertical cross-sectional view of the second exemplary device structure of FIG. **13**A.

FIG. **14**A is a top-down view of the array region of the second exemplary device structure after formation of memory openings according to the second embodiment of the present disclosure.

FIG. **14**B is a vertical cross-sectional view of the second exemplary device structure along the vertical plane B-B' of FIG. **14**A.

FIG. **15**A is a top-down view of the array region of the second exemplary device structure after formation of control gate electrodes and source-side select gate electrodes according to the second embodiment of the present disclosure.

FIG. **15**B is a vertical cross-sectional view of the second exemplary device structure along the vertical plane B-B' of FIG. **15**A.

FIG. **16**A is a top-down view of the array region of the second exemplary device structure after formation of blocking dielectrics, charge storage material layers, tunnel dielectrics, and first semiconductor channels according to the second embodiment of the present disclosure.

FIG. **16**B is a vertical cross-sectional view of the second exemplary device structure along the vertical plane B-B' of FIG. **16**A.

FIG. **17**A is a top-down view of the array region of the second exemplary device structure after formation of second semiconductor channels and dielectric cores according to the second embodiment of the present disclosure.

FIG. **17**B is a vertical cross-sectional view of the second exemplary device structure along the vertical plane B-B' of FIG. **17**A.

FIG. **18** is a vertical cross-sectional view of the second exemplary device structure after formation of bit lines according to the second embodiment of the present disclosure.

FIG. **19** is a see-through top-down view of the second exemplary device structure that illustrates global shapes of various components of the second exemplary device structure according to the second embodiment of the present disclosure.

FIG. **20** is a perspective view of an array region of the second exemplary device structure according to the second embodiment of the present disclosure.

FIG. **21**A is a top-down view of a third exemplary device structure after formation of an alternating stack of insulating layers and semiconductor layers and subsequent formation of laterally-extending trenches according to a third embodiment of the present disclosure.

FIG. **21**B is a vertical cross-sectional view of the third exemplary device structure of FIG. **21**A.

FIG. **22**A is a top-down view of the third exemplary device structure after formation of separator structures according to the third embodiment of the present disclosure.

FIG. **22**B is a vertical cross-sectional view of the third exemplary device structure of FIG. **22**A.

FIG. **23**A is a top-down view of the third exemplary device structure after formation of memory openings according to the third embodiment of the present disclosure.

FIG. **23**B is a vertical cross-sectional view of the third exemplary device structure of FIG. **23**A.

FIG. **24**A is a top-down view of the third exemplary device structure after selective lateral expansion of the memory openings according to the third embodiment of the present disclosure.

FIG. **24**B is a vertical cross-sectional view along the vertical plane B-B' of the third exemplary device structure of FIG. **24**A.

FIG. **24**C is a horizontal cross-sectional view of the third exemplary device structure along the horizontal plane C-C' of FIG. **24**B.

FIG. **25**A is a top-down view of the third exemplary device structure after formation of blocking dielectrics according to the third embodiment of the present disclosure.

FIG. **25**B is a vertical cross-sectional view along the vertical plane B-B' of the third exemplary device structure of FIG. **25**A.

FIG. **25**C is a horizontal cross-sectional view of the third exemplary device structure along the horizontal plane C-C' of FIG. **25**B.

FIG. **26**A is a vertical cross-sectional view of the third exemplary device structure after formation of a floating gate material layer according to the third embodiment of the present disclosure along the horizontal plane A-A' of FIG. **26**B.

FIG. **26**B is a vertical cross-sectional view along the vertical plane B-B' of the third exemplary device structure of FIG. **26**A.

FIG. **26**C is a horizontal cross-sectional view of the third exemplary device structure along the horizontal plane C-C' of FIG. **26**B.

FIG. **27**A is a vertical cross-sectional view of the third exemplary device structure after formation of floating gates according to the third embodiment of the present disclosure along the horizontal plane A-A' of FIG. **27**B.

FIG. **27**B is a vertical cross-sectional view along the vertical plane B-B' of the third exemplary device structure of FIG. **27**A.

FIG. **27**C is a horizontal cross-sectional view of the third exemplary device structure along the horizontal plane C-C' of FIG. **27**B.

FIG. **28**A is a vertical cross-sectional view of the third exemplary device structure after formation of tunneling dielectrics according to the third embodiment of the present disclosure along the horizontal plane A-A' of FIG. **28**B.

FIG. **28**B is a vertical cross-sectional view along the vertical plane B-B' of the third exemplary device structure of FIG. **28**A.

FIG. **28**C is a horizontal cross-sectional view of the third exemplary device structure along the horizontal plane C-C' of FIG. **28**B.

FIG. **29**A is a vertical cross-sectional view of the third exemplary device structure after formation of a semiconductor channel and a dielectric core in each memory opening according to the third embodiment of the present disclosure along the horizontal plane A-A' of FIG. **29**B.

FIG. **29**B is a vertical cross-sectional view along the vertical plane B-B' of the third exemplary device structure of FIG. **29**A.

FIG. **29**C is a horizontal cross-sectional view of the third exemplary device structure along the horizontal plane C-C' of FIG. **29**B.

FIG. **30**A is a vertical cross-sectional view of the third exemplary device structure after formation of enhanced doping regions according to the third embodiment of the present disclosure along the horizontal plane A-A' of FIG. **30**B.

FIG. **30**B is a vertical cross-sectional view along the vertical plane B-B' of the third exemplary device structure of FIG. **30**A.

FIG. **30**C is a horizontal cross-sectional view of the third exemplary device structure along the horizontal plane C-C' of FIG. **30**B.

FIG. **31**A is a vertical cross-sectional view of the third exemplary device structure after formation of drain regions according to the third embodiment of the present disclosure along the horizontal plane A-A' of FIG. **31**B.

FIG. **31**B is a vertical cross-sectional view along the vertical plane B-B' of the third exemplary device structure of FIG. **31**A.

FIG. **31**C is a horizontal cross-sectional view of the third exemplary device structure along the horizontal plane C-C' of FIG. **31**B.

FIG. **32**A is a vertical cross-sectional view of a fourth exemplary device structure after removal of separator insulator structures according to the fourth embodiment of the present disclosure along the horizontal plane A-A' of FIG. **32**B.

FIG. **32**B is a vertical cross-sectional view along the vertical plane B-B' of the fourth exemplary device structure of FIG. **32**A.

FIG. **32**C is a horizontal cross-sectional view of the fourth exemplary device structure along the horizontal plane C-C' of FIG. **32**B.

FIG. **33**A is a vertical cross-sectional view of the fourth exemplary device structure after formation of enhanced doping regions according to the fourth embodiment of the present disclosure along the horizontal plane A-A' of FIG. **33**B.

FIG. **33**B is a vertical cross-sectional view along the vertical plane B-B' of the fourth exemplary device structure of FIG. **33**A.

FIG. **33**C is a horizontal cross-sectional view of the fourth exemplary device structure along the horizontal plane C-C' of FIG. **33**B.

FIG. **34**A is a vertical cross-sectional view of the fourth exemplary device structure after formation of drain regions according to the fourth embodiment of the present disclosure along the horizontal plane A-A' of FIG. **34**B.

FIG. **34**B is a vertical cross-sectional view along the vertical plane B-B' of the fourth exemplary device structure of FIG. **34**A.

FIG. **34**C is a horizontal cross-sectional view of the fourth exemplary device structure along the horizontal plane C-C' of FIG. **34**B.

FIG. **35**A is a top-down view of a fifth exemplary device structure after formation of an alternating stack of insulating layers and semiconductor layers and subsequent formation of laterally-extending trenches according to a fifth embodiment of the present disclosure.

FIG. **35**B is a vertical cross-sectional view of the third exemplary device structure of FIG. **35**A.

FIG. **36**A is a top-down view of the fifth exemplary device structure after formation of dielectric liners according to the fifth embodiment of the present disclosure.

FIG. **36**B is a vertical cross-sectional view of the fifth exemplary device structure of FIG. **36**A.

FIG. **37**A is a top-down view of the fifth exemplary device structure after formation of dielectric fill material portions according to the fifth embodiment of the present disclosure.

FIG. **37**B is a vertical cross-sectional view of the fifth exemplary device structure of FIG. **37**A.

FIG. **38**A is a top-down view of the fifth exemplary device structure after formation of memory openings according to the fifth embodiment of the present disclosure.

FIG. **38**B is a vertical cross-sectional view of the fifth exemplary device structure of FIG. **38**A.

FIG. **39**A is a top-down view of the fifth exemplary device structure after selective lateral expansion of the memory openings according to the fifth embodiment of the present disclosure.

FIG. **39**B is a vertical cross-sectional view along the vertical plane B-B' of the fifth exemplary device structure of FIG. **39**A.

FIG. **39**C is a horizontal cross-sectional view of the fifth exemplary device structure along the horizontal plane C-C' of FIG. **39**B.

FIG. **40**A is a vertical cross-sectional view of the fifth exemplary device structure after formation of blocking dielectrics according to the fifth embodiment of the present disclosure along the horizontal plane A-A' of FIG. **40**B.

FIG. **40**B is a vertical cross-sectional view along the vertical plane B-B' of the fifth exemplary device structure of FIG. **40**A.

FIG. **40**C is a horizontal cross-sectional view of the fifth exemplary device structure along the horizontal plane C-C' of FIG. **40**B.

FIG. **41**A is a vertical cross-sectional view of the fifth exemplary device structure after formation of a floating gate material layer according to the fifth embodiment of the present disclosure along the horizontal plane A-A' of FIG. **41**B.

FIG. **41**B is a vertical cross-sectional view along the vertical plane B-B' of the fifth exemplary device structure of FIG. **41**A.

FIG. **41**C is a horizontal cross-sectional view of the fifth exemplary device structure along the horizontal plane C-C' of FIG. **41**B.

FIG. **42**A is a vertical cross-sectional view of the fifth exemplary device structure after formation of floating gates according to the fifth embodiment of the present disclosure along the horizontal plane A-A' of FIG. **42**B.

FIG. **42**B is a vertical cross-sectional view along the vertical plane B-B' of the fifth exemplary device structure of FIG. **42**A.

FIG. **42**C is a horizontal cross-sectional view of the fifth exemplary device structure along the horizontal plane C-C' of FIG. **42**B.

FIG. **43**A is a vertical cross-sectional view of the fifth exemplary device structure after formation of tunneling dielectrics according to the fifth embodiment of the present disclosure along the horizontal plane A-A' of FIG. **43**B.

FIG. **43**B is a vertical cross-sectional view along the vertical plane B-B' of the fifth exemplary device structure of FIG. **43**A.

FIG. **43**C is a horizontal cross-sectional view of the fifth exemplary device structure along the horizontal plane C-C' of FIG. **43**B.

FIG. **44**A is a vertical cross-sectional view of the fifth exemplary device structure after formation of a semiconductor channel and a dielectric core in each memory opening according to the fifth embodiment of the present disclosure along the horizontal plane A-A' of FIG. **44**B.

FIG. **44**B is a vertical cross-sectional view along the vertical plane B-B' of the fifth exemplary device structure of FIG. **45**A.

FIG. **44**C is a horizontal cross-sectional view of the fifth exemplary device structure along the horizontal plane C-C' of FIG. **44**B.

FIG. **45**A is a vertical cross-sectional view of the fifth exemplary device structure after optional replacement of semiconductor layers with metallic layers according to the fifth embodiment of the present disclosure along the horizontal plane A-A' of FIG. **45**B.

FIG. **45**B is a vertical cross-sectional view along the vertical plane B-B' of the fifth exemplary device structure of FIG. **45**A.

FIG. **45**C is a horizontal cross-sectional view of the fifth exemplary device structure along the horizontal plane C-C' of FIG. **45**B.

DETAILED DESCRIPTION

As discussed above, the present disclosure is directed to three-dimensional non-volatile memory devices, such as

vertical NAND strings and other three-dimensional devices, and methods of making the same, the various aspects of which are described below. The embodiments of the disclosure can be employed to form various semiconductor devices such as three-dimensional monolithic memory array devices comprising a plurality of NAND memory strings. The drawings are not drawn to scale. Multiple instances of an element may be duplicated where a single instance of the element is illustrated, unless absence of duplication of elements is expressly described or clearly indicated otherwise. Ordinals such as "first," "second," and "third" are employed merely to identify similar elements, and different ordinals may be employed across the specification and the claims of the instant disclosure.

A monolithic three dimensional memory array is one in which multiple memory levels are formed above a single substrate, such as a semiconductor wafer, with no intervening substrates. The term "monolithic" means that layers of each level of the array are directly deposited on the layers of each underlying level of the array. In contrast, two dimensional arrays may be formed separately and then packaged together to form a non-monolithic memory device. For example, non-monolithic stacked memories have been constructed by forming memory levels on separate substrates and vertically stacking the memory levels, as described in U.S. Pat. No. 5,915,167 titled "Three Dimensional Structure Memory." The substrates may be thinned or removed from the memory levels before bonding, but as the memory levels are initially formed over separate substrates, such memories are not true monolithic three dimensional memory arrays. The substrate may include integrated circuits fabricated thereon, such as driver circuits for a memory device

The various three dimensional memory devices of the present disclosure include a monolithic three-dimensional NAND string memory device, and can be fabricated employing the various embodiments described herein. The monolithic three dimensional NAND string is located in a monolithic, three dimensional array of NAND strings located over the substrate. At least one memory cell in the first device level of the three dimensional array of NAND strings is located over another memory cell in the second device level of the three dimensional array of NAND strings.

Referring to FIG. **1**, an exemplary device structure according to embodiments of the present disclosure is shown, which includes a 3D NAND stacked memory device. The exemplary device structure can be employed to incorporate any of the various embodiments for forming memory stack structures **55** according to the present disclosure. Each memory stack structure **55** can include at least a memory film **50**, a semiconductor channel **60**, and optionally a dielectric core **62** in case the semiconductor channel **60** does not fill the entire volume within the memory film **50**.

The exemplary device structure includes a substrate **8**, which can be a semiconductor substrate. Various semiconductor devices can be formed on, or over, the substrate **8** employing methods known in the art. For example, an array of memory devices can be formed in a device region **100**, and at least one peripheral device **20** can be formed in a peripheral device region **200**. Electrically conductive via contacts to the electrically conductive electrodes of the devices in the device region **100** can be formed in a contact region **300**.

The substrate **8** can include a substrate semiconductor layer **10**. The substrate semiconductor layer **10** is a semiconductor material layer, and can include at least one elemental semiconductor material, at least one III-V compound semiconductor material, at least one II-VI compound semiconductor material, at least one organic semiconductor material, or other semiconductor materials known in the art. The substrate **8** has a major surface **9**, which can be, for example, a topmost surface of the substrate semiconductor layer **10**. The major surface **9** can be a semiconductor surface. In one embodiment, the major surface **9** can be a single crystalline semiconductor surface.

As used herein, a "semiconductor material" refers to a material having electrical conductivity in the range from 1.0×10^{-6} S/cm to 1.0×10^{5} S/cm, and is capable of producing a doped material having electrical conductivity in a range from 1.0 S/cm to 1.0×10^{5} S/cm upon suitable doping with an electrical dopant. As used herein, an "electrical dopant" refers to a p-type dopant that adds a hole to a valence band within a band structure, or an n-type dopant that adds an electron to a conduction band within a band structure. As used herein, a "conductive material" refers to a material having electrical conductivity greater than 1.0×10^{5} S/cm. As used herein, an "insulator material" or a "dielectric material" refers to a material having electrical conductivity less than 1.0×10^{-6} S/cm. All measurements for electrical conductivities are made at the standard condition. Optionally, at least one doped well (not expressly shown) can be formed within the substrate semiconductor layer **10**.

Optionally, select gate electrodes (not shown) can be formed within, or on top of, the substrate semiconductor layer **10** using any suitable methods for implementing the array of vertical NAND strings. For example, a lower select gate device level may be fabricated as described in U.S. patent application Ser. No. 14/133,979, filed on Dec. 19, 2013, U.S. patent application Ser. No. 14/225,116, filed on Mar. 25, 2014, and/or U.S. patent application Ser. No. 14/225,176, filed on Mar. 25, 2014, all of which are incorporated herein by reference. A source region **12** can be formed in a region of the substrate semiconductor layer **10** that is laterally offset from the memory stack structures **55**. Alternatively, a source region can be formed directly underneath memory stack structures **55** of memory cells, as described in U.S. patent application Ser. No. 14/317,274, filed on Jun. 27, 2014, which is incorporated herein by reference. A select transistor can be formed between the top of the substrate semiconductor layer **10** and the bottommost control gate of the memory devices.

At least one optional shallow trench isolation structure **16** and/or at least one deep trench isolation structure (not shown) may be employed to provide electrical isolation among various semiconductor devices on the substrate **8**. The at least one peripheral device **20** formed in the peripheral device region **200** can include any device known in the art and needed to support the operation of the semiconductor devices in the device region **100**. The at least one peripheral device **20** can include a driver circuit associated with the array of the memory devices in the device region **100**. The at least one peripheral device can comprise transistor devices in the driver circuit. In one embodiment, the at least one peripheral device can include one or more field effect transistors, each of which can include a source region **201**, a drain region **202**, a body region **203** (e.g., a channel region), a gate stack **205**, and a gate spacer **206**. The gate stack **205** can include any type of gate stack known in the art. For example, each gate stack **205** can include, from one side to another, a gate dielectric, a gate electrode, and an optional gate cap dielectric. Optionally, a planarization dielectric layer **170** including a dielectric material may be employed in the peripheral device region **200** to facilitate planarization of the portion of material stacks to be subsequently formed on the substrate **8**.

A stack of alternating layers of a first material and a second material different from the first material is formed over a top surface of the substrate **8**. In one embodiment, the first material can be an insulator material that forms insulating layers **32**, and the second material can be a conductive material that forms conductive line structures that can include electrically conductive layers **46**, source-side select gate electrodes (not separately shown), and drain-side select gate electrodes (not separately shown). Alternatively, the first material can be an insulator material that forms insulating layers **32**, and the second material can be a sacrificial material that is deposited as sacrificial layers, and is at least partly replaced with a conductive material to form various conductive line structures after formation of memory stack structures **55**. In one embodiment, the alternating stack can include insulating layers **32** and material layers, which may comprise a sacrificial material that is subsequently replaced with a conductive material that forms control gate electrodes, or may comprise a conductive material that is patterned into control gate electrodes of a memory device.

The memory stack structures **55** can be formed through the alternating stack (**32**, **46**) of the insulating layers **32** and the electrically conductive layers **46** employing the various methods of the present disclosure to be described below. A drain region **63** can be formed on top of each semiconductor channel **60**. A peripheral region dielectric layer **64** can be formed by removing a peripheral portion of the alternating stack of insulating layers **32** and sacrificial material layers **42** from a peripheral device region **200** including the peripheral devices (such as driver circuits) and depositing a dielectric material over the planarization dielectric layer **170**. Another portion of the alternating stack (**32**, **42**) in a contact region **300** can be removed to form stepped surfaces in which the lateral extent of the material layers (such as sacrificial material layers **42**) decreases with the vertical distance from the substrate **8**. A retro-stepped dielectric fill portion **65** may be optionally employed over the stepped surfaces. As used herein, a retro-stepped structure refers to a structure in which the horizontal vertical cross-sectional area changes stepwise with a vertical distance from a top surface of a substrate such that a vertical cross-sectional area of the structure at a lower horizontal plane is included in vertical cross-sectional areas of the structure at an overlying horizontal plane.

A contact via trench is formed through the alternating stack (**32**, **42**) at locations of a backside contact via structure **76** to be subsequently formed. If the material layers between vertically neighboring pairs of insulating layers **32** are sacrificial material layers **42**, the sacrificial material layers **42** can be removed by introducing an etchant through the contact via trench. The etchant removes the material of the sacrificial material layers **42** selective to the material of the insulating layers **32** to form backside recesses. Electrically conductive layers **46** can be formed by depositing at least one conducive material in the backside recesses. The electrically conductive layers **46** include control gate electrodes for the memory stack structures **55**. The electrically conductive layers **46** can form terraced (stepped) structures within the contact region **300** in order to facilitate formation of contact via structures **66**.

The contact via structures **66** can be formed by forming via cavities that extend to the stepped surfaces of the electrically conductive layers **46**, and by filling each via cavity with an optional dielectric liner **64** and a contact via structure **66**. The dielectric liner **64**, if present, may enhance electrical isolation of the contact via structures **66**. A hard mask layer **36** may be optionally employed to facilitate formation of the contact via structures **66**. Peripheral contact via structures **86** can be formed in the peripheral device region **200**. A backside contact via structure **76** can be formed through the alternating stack (**32**, **46**) to provide electrical contact to the source region **12**. A dielectric spacer **74** can be employed to provide electrical isolation for the backside contact via structure **76**. Subsequently, contacts (not shown) to the drain regions **63** can be formed, and bit lines (not shown) that overlie, and electrically shorted to, the drain regions **63** can be formed.

Referring to FIGS. **2**A and **2**B, a cut-out portion of a first exemplary device structure according to a first embodiment of the present disclosure is illustrated at a processing step after formation of an alternating stack (**32**, **42**). The alternating stack (**32**, **42**) includes alternating layers of a first material and a second material different from the first material. In one embodiment, the alternating stack (**32**, **42**) can include insulating layers **32** composed of the first material, and sacrificial material layers **42** composed of a second material different from that of insulating layers **32**. The sacrificial material layers may comprise electrically conductive material which forms the control gate electrodes of the NAND string. Alternatively, the sacrificial material layers **42** may comprise electrically insulating or conductive sacrificial layers which are removed through the back side openings and replaced with metal control gate electrodes. The insulating layers **32** can comprise insulator layers that provide the functionality of electrical insulation, and the sacrificial material layers **42** can comprise sacrificial layers that are subsequently removed.

The first material can be at least one electrically insulating material. As such, each insulating layer **32** can be an insulating material layer. Electrically insulating materials that can be employed for the insulating layers **32** include, but are not limited to silicon oxide (including doped or undoped silicate glass), silicon nitride, silicon oxynitride, organosilicate glass (OSG), spin-on dielectric materials, dielectric metal oxides that are commonly known as high dielectric constant (high-k) dielectric oxides (e.g., aluminum oxide, hafnium oxide, etc.) and silicates thereof, dielectric metal oxynitrides and silicates thereof, and organic insulating materials.

The sacrificial material layers **42** can function as control gate electrodes made of at least one conductive material. In this case, each sacrificial material layer **42** can be a conductive material layer. Conductive materials that can be employed for the sacrificial material layers **42** that constitute the control gate electrodes include, but are not limited to, a doped semiconductor material, elemental metals, intermetallic alloys, conductive nitrides of at least one elemental metal, a silicate of at least one metal, conductive carbon allotropes, organic conductive materials, and combinations thereof. For example, the second material can be doped polysilicon, tungsten, tungsten nitride, tantalum, tantalum nitride, titanium, titanium nitride, cobalt, copper, aluminum, an alloy thereof, or a combination thereof. Alternatively, the sacrificial material layers **42** may comprise sacrificial layers, such as silicon nitride or polysilicon sacrificial layers. In this case, at least one, and/or each, of the sacrificial material layers **42** can be a sacrificial material layer. In an illustrative example, the sacrificial material layers **42** can be silicon nitride layers that can be subsequently removed, for example, by a wet etch employing phosphoric acid.

In one embodiment, the insulating layers **32** can include silicon oxide, and sacrificial material layers can include silicon nitride sacrificial layers or doped polysilicon or doped amorphous silicon layers that can be subsequently

converted into doped polysilicon through a thermal anneal at an elevated temperature. The first material of the insulating layers **32** can be deposited, for example, by chemical vapor deposition (CVD). For example, if silicon oxide is employed for the insulating layers **32**, tetraethyl orthosilicate (TEOS) can be employed as the precursor material for the CVD process. The second material of the sacrificial material layers **42** can be formed, for example, by physical vapor deposition (PVD; sputtering), chemical vapor deposition, electroplating, electroless plating, or combinations thereof.

The sacrificial material layers **42** can be suitably patterned to function as the control gate electrodes of the monolithic three-dimensional NAND string memory devices to be subsequently formed. Each sacrificial material layer **42** may comprise a portion having a strip shape extending substantially parallel to the major surface **9** of the substrate **8**.

The thicknesses of the insulating layers **32** and the sacrificial material layers **42** can be in a range from 8 nm to 128 nm, although lesser and greater thicknesses can be employed for each insulating layer **32** and for each control gate electrode **42**. In one embodiment, the thicknesses of the insulating layers **32** and the sacrificial material layers **42** can be in a range from 20 nm to 50 nm. The number of repetitions of the pairs of an insulating layer **32** and a sacrificial material layer (e.g., control gate electrode or sacrificial material) **42** can be in a range from 2 to 1,024, and typically from 8 to 256, although a greater number of repetitions can also be employed. The top and bottom gate electrodes in the stack may function as the select gate electrodes.

An upper select gate electrode layer and another insulating layer **32** can be sequentially formed. The upper select gate electrode layer can be another sacrificial material layer **42**, or can be a conductive material layer including a conductive material such as doped polysilicon. Separator trenches **47** can be formed through the topmost insulating layer **32**, the upper select gate electrode layer, and the alternating stack (**32**, **42**) of insulating layers **32** and sacrificial material layers **42**. The separator trenches **47** can be formed, for example, by application and patterning of a photoresist layer over the topmost insulating layer **32**, and transfer of the pattern in the patterned photoresist layer through the topmost insulating layer **32**, the upper select gate electrode layer, and the alternating stack (**32**, **42**) to the top surface of the substrate **8** that is located at the bottom of the alternating stack (**32**, **42**). The separator trenches **47** laterally extend along a horizontal direction. In one embodiment, the separator trenches **47** can have a substantially uniform width, and can be parallel among one another. The separator trenches **47** can laterally divide the alternating stack (**32**, **42**) into a plurality of portions. If the select gate electrode layer includes a conductive material, the remaining portions of the select gate electrode layer can constitute an upper select gate electrode **48**.

Referring to FIGS. **3**A and **3**B, each separator trench **47** can be filled with a dielectric material that is different from the second material. The dielectric material that fills the separator trenches **47** is herein referred to as a separator insulating material. For example, the separator insulating material can be undoped silicate glass or doped silicate glass. Excess portions of the separator insulating material can be removed from above the top surface of the alternating stack, for example, by chemical mechanical planarization (CMP), a recess etch, or a combination thereof. Remaining portions of the deposited separator insulating material constitutes separator insulator structures **43**, which are separator structures including an insulating material. As used herein, a separator structure refers to a structure that physically separates at least two portions of a material layer. In one embodiment, the separator insulator structures **43** can laterally separate various portions of the alternating stack (**32**, **42**). In one embodiment, the separator insulator structures **43** can laterally separate various portions of the alternating stack (**32**, **42**), the upper select gate electrodes **48**, and the topmost insulating layer **32**.

Referring to FIGS. **4**A and **4**B, memory openings **49** can be formed through the topmost insulating layer **32**, the upper select gate electrodes **48**, and the alternating stack (**32**, **42**) by application of a photoresist layer over the topmost insulating layer **32**, lithographic patterning of the photoresist layer, and transfer of the pattern in the photoresist layer through the topmost insulating layer **32**, the upper select gate electrodes **48**, and the alternating stack (**32**, **42**) by an anisotropic etch such as a reactive ion etch. The photoresist layer can be subsequently removed, for example, by ashing. Each memory opening **49** extends through the insulating cover layer, i.e., the topmost insulating layer **32**, and through the upper select gate electrodes **48**, and the underlying alternating stack (**32**, **42**) of insulating layers **32** and sacrificial material layers **42**. Each memory opening **49** can vertically extend from the top surface of the alternating stack (**32**, **42**) to the top surface of the substrate that is located at the bottom of the alternating stack (**32**, **42**). Each memory opening **49** can be formed through a portion of a separator insulator structure **43**. In other words, a memory opening **49** can divide a separator insulator structure **43** into two physically disjoined portions. Each memory opening **49** in the alternating stack (**32**, **42**) can extend through the separator insulating material located in the separator insulator structures **43**, and divides a separator insulator structure **43** into two laterally disjoined portions.

Referring to FIGS. **5**A-**5**C, the material layers between each vertically neighboring pairs of insulating layers **32** can be sacrificial material layers **42**, and the sacrificial material layers **42** can be selectively etched with respect to the insulating layers **32** from inside each memory opening **49**. A lateral recess region **49**A is formed at each level of the sacrificial material layers **42** within each memory opening **49**. Each lateral recess region **49**A is formed at the level of a respective sacrificial material layer **42** through a memory opening **49**. Specifically, the lateral recess regions **49**A can be formed, for example, by a selective etch process in which the sacrificial material of the sacrificial material layers **42** is etched selective to the insulator material of the insulating layers **32**. As used herein, an etch process that etches a first material is "selective" to a second material if the etch rate for the first material is at least twice the etch rate for the second material. The ratio of the etch rate for the first material to the etch rate for the second material is herein referred to as a "selectivity" of the etch process. In one embodiment, the selectivity of the etch process that etches the sacrificial material layers **42** can be greater than 10 with respect to the dielectric materials of the separator insulator structures **43** and the insulating layers **32**. Optionally, the selective etch process can be selective to the conductive material of the upper select gate electrodes **48**. The selective etch process laterally recesses the sidewalls of the sacrificial material layers **42** farther away from each memory opening **49** than sidewalls of adjoining insulating layers **32**. The distance of the lateral recess for the lateral recess regions **49**A can be selected such that the lateral recess regions **49**A from neighboring memory openings **49** do not merge after termination of the selective etch process. In one embodiment, each lateral recess region **49**A can have an annular shape.

Referring to FIGS. **6**A-**6**C, a blocking dielectric layer **52**L can be formed in the memory opening **49** by a conformal deposition method such as chemical vapor deposition or atomic layer deposition. The blocking dielectric layer **52**L can be a contiguous blocking dielectric layer that covers the hard mask layer **36** and extends into a plurality of memory openings **49** without any hole therein. The blocking dielectric layer **52**L can contact the sidewalls of the memory openings **49**. Specifically, the blocking dielectric layer **52**L can contact the recessed sidewalls of the sacrificial layers **42**. The blocking dielectric layer **52**L may include one or more dielectric material layers that can function as the dielectric material(s) of a control gate dielectric between the sacrificial layers **42** and a floating gate region to be subsequently formed. The blocking dielectric layer **52**L can include silicon oxide, a dielectric metal oxide, a dielectric metal oxynitride, or a combination thereof. In one embodiment, the blocking dielectric layer **52**L can include a stack of at least one silicon oxide layer and at least one dielectric metal oxide layer. The blocking dielectric layer **52**L can be formed by a conformal deposition process such as chemical vapor deposition (CVD) and/or atomic layer deposition (ALD), and/or by deposition of a conformal material layer (such as an amorphous silicon layer) and subsequent conversion of the conformal material layer into a dielectric material layer (such as a silicon oxide layer). The thickness of the blocking dielectric layer **52**L can be selected such that the lateral recess regions **49**A are not filled by the blocking dielectric layer **52**L. The thickness of the blocking dielectric layer **52**L can be in a range from 6 nm to 24 nm, although lesser and greater thicknesses can also be employed.

Subsequently, a memory material layer **54**L, which can be a charge storage layer, can be deposited on the surfaces of the blocking dielectric layer **52**L. The memory material layer **54**L can be deposited by a conformal deposition method such as chemical vapor deposition or atomic layer deposition. The memory material layer **54**L can be a contiguous memory material layer that overlies a horizontal portion of the blocking dielectric layer **52**L and extends into a plurality of memory openings **49** without any hole therein. The memory material layer **54**L can include a conductive material or a dielectric material. In one embodiment, the memory material layer **54**L can include a floating gate material, which can be a conductive material. In another embodiment, the memory material layer **54**L can be a charge trapping dielectric layer such as a silicon nitride layer. The thickness of the memory material layer **54**L can be selected such that the lateral recess regions **49**A are filled by the memory material layer **52**L without completely filling a center portion of each memory opening **49**. The thickness of the memory material layer **54**L, as measured on vertical surfaces of the blocking dielectric layer **52**L outside of the lateral recess regions **49**A, can be in a range from 3 nm to 60 nm, although lesser and greater thicknesses can also be employed. Thus, a cavity **49'** is present at a center portion of each memory opening **49** after the memory material layer **54**L fills the lateral recess regions **49**A of the memory opening **49**.

In case the memory material layer **54**L includes a dielectric charge trapping material, the dielectric charge trapping material can be, for example, silicon nitride. If the memory material layer **54**L includes a conductive material, the conductive material can be, for example, doped polysilicon or a metallic material. The memory material layer **54**L can be formed as a single floating gate region of homogeneous composition, or can include a stack of multiple charge storage material layers. The multiple charge storage material layers, if employed, can comprise a plurality of spaced-apart floating gate material layers that contain conductive materials (e.g., metal such as tungsten, molybdenum, tantalum, titanium, platinum, ruthenium, and alloys thereof, or a metal silicide such as tungsten silicide, molybdenum silicide, tantalum silicide, titanium silicide, nickel silicide, cobalt silicide, or a combination thereof) and/or semiconductor materials (e.g., polycrystalline or amorphous semiconductor material including at least one elemental semiconductor element or at least one compound semiconductor material). Alternatively or additionally, the memory material layer **54**L may comprise an insulating charge trapping material, such as one or more silicon nitride segments. Alternatively, the memory material layer **54**L may comprise conductive nanoparticles such as metal nanoparticles, which can be, for example, ruthenium nanoparticles. The memory material layer **54**L can be formed, for example, by chemical vapor deposition (CVD), atomic layer deposition (ALD), physical vapor deposition (PVD), or any suitable deposition technique for the selected material(s) for the floating gate region. The thickness of the memory material layer **54**L can be in a range from 2 nm to 20 nm, although lesser and greater thicknesses can also be employed.

Referring to FIGS. **7**A-**7**C, portions of the blocking dielectric layer **52**L and the memory material layer **54**L that are located outside of the lateral recess regions are removed from within each memory opening **49**. Remaining portions of the contiguous blocking dielectric layer **52**L constitute blocking dielectrics **52**. Remaining portions of the memory material layer **54**L constitute sets of pairs of floating gate regions **54**, which are multiple sets of at least two charge storage elements. As used herein, a "charge storage element" refers to a physical structure configured to store information of a binary bit or a multinary bit (such as a ternary bit, a quaternary bit, etc.). The physical structure configured to store information may be a portion of a memory material layer or a floating gate structure. In one embodiment, each portion of the memory material layer **54**L configured to store one binary bit of information can be a charge storage element. Specifically, the portions of the blocking dielectric layer **52**L and the memory material layer **54**L that do not underlie the topmost insulating layer **32** can be removed by an etch process, which can be an anisotropic etch, an isotropic etch, or a combination of an anisotropic etch and an isotropic etch. The cavity **49'** within each memory opening expands by the volume of the removed portions of the blocking dielectric layer **52**L and the memory material layer **54**L so that the volume of the cavity **49'** is equal to, or greater than, the original volume of the memory opening **49** as formed at the processing steps of FIGS. **4**A and **4**B. The sidewall surfaces of the insulating layers **32** and the upper select gate electrodes **48** can be physically exposed after the etch process.

Each remaining portion of the blocking dielectric layer **52**L constitutes a blocking dielectric **52**. Each remaining portion of the memory material layer **54**L constitutes a floating gate region **54**. A pair of mutually disjoined blocking dielectrics **52** is present at each level of a memory opening. A pair of mutually disjoined floating gate regions **54** is present at each level of the memory opening. Each blocking dielectric **52** contacts sidewall surfaces of two separator insulator structures **43**. Each floating gate region **54** is spaced from the separator insulator structures **43** by a blocking dielectric **52**. Each blocking dielectric **52** can have a convex outer surface and a concave inner surface. Surfaces of each blocking dielectric **52** are physically exposed to a cavity **49'**. The blocking dielectrics **52** are formed in the

lateral recess regions **49**A of through the memory opening. In one embodiment, the floating gate regions **54** can be a plurality of floating gates. Each pair of floating gate regions **54** at a level within a memory opening constitutes a set of at least two charge storage elements that are present within each lateral recess region **49**A.

Referring to FIGS. **8**A-**8**C, a tunnel dielectric **56** and a first semiconductor channel portion **601** can be formed within each cavity **49'**. The first semiconductor channel portions **601** can include a doped semiconductor material or an undoped semiconductor material. For example, each first semiconductor channel portions **601** can be a doped polysilicon portion or an undoped polysilicon portion. An anisotropic etch can be performed. A top surface of the substrate semiconductor layer **10** can be physically exposed at the bottom of each memory opening **49** after the anisotropic etch. In one embodiment, the floating gate regions **54** can be a plurality of floating gates. In this case, the tunnel dielectric **56** can be formed in the memory opening over the plurality of floating gates.

Each tunnel dielectric **56** includes a dielectric material through which charge tunneling can be performed under suitable electrical bias conditions. The charge tunneling may be performed through hot-carrier injection or by Fowler-Nordheim tunneling induced charge transfer depending on the mode of operation of the monolithic three-dimensional NAND string memory device to be formed. The tunnel dielectric **56** can include silicon oxide, silicon nitride, silicon oxynitride, dielectric metal oxides (such as aluminum oxide and hafnium oxide), dielectric metal oxynitride, dielectric metal silicates, alloys thereof, and/or combinations thereof. In one embodiment, the tunnel dielectric **56** can include a stack of a first silicon oxide layer, a silicon oxynitride layer, and a second silicon oxide layer, which is commonly known as an ONO stack. In one embodiment, the tunnel dielectric **56** can include a silicon oxide layer that is substantially free of carbon or a silicon oxynitride layer that is substantially free of carbon. The thickness of the tunnel dielectric **56** can be in a range from 2 nm to 20 nm, although lesser and greater thicknesses can also be employed.

A first semiconductor channel portion **601** can be formed within each memory hole. Each first semiconductor channel portion **601** can be formed on inner sidewalls of each memory film **50** by deposition of a semiconductor material layer and a subsequent anisotropic etch of the semiconductor material layer. The first semiconductor channel portions **601** can include a doped polycrystalline semiconductor material (such as doped polysilicon), or can include a doped amorphous semiconductor material (such as amorphous silicon) that can be subsequently converted into a doped polycrystalline semiconductor material after a suitable anneal at an elevated temperature. A top surface of the substrate semiconductor layer **10** can be physically exposed at the bottom of each memory opening.

Referring to FIGS. **9**A-**9**C, a second semiconductor channel layer and an optional dielectric material layer can be sequentially deposited in the memory openings **49** and over the topmost insulating layer **32**. The second semiconductor channel layer can be a doped semiconductor material layer or an undoped semiconductor material layer. For example, the second semiconductor channel layer can be a doped polysilicon layer or an undoped polysilicon layer. In one embodiment, the second semiconductor channel layer does not completely fill the cavity in each memory opening **49**. In another embodiment, the second semiconductor channel layer completely fills the cavities in the memory openings **49**.

If the memory openings **49** are not completely filled, the dielectric material layer can be deposited to fill the memory openings **49**. The portions of the second semiconductor channel layer and the optional dielectric material layer located above the top surface of the topmost insulating layer **32** can be removed, for example, by chemical mechanical planarization, a recess etch, or a combination thereof. Each remaining portion of the second semiconductor channel layer constitutes a second semiconductor channel portion **602**. Each adjoining pair of a first semiconductor channel portion **601** and a second semiconductor channel portion **602** collectively constitutes a semiconductor channel **60**, which may optionally further include a horizontal top portion of the substrate semiconductor layer **10**. Each remaining portion of the dielectric material layer, if employed, constitutes a dielectric core **62**.

Subsequently, the second material of the sacrificial material layers **42** can be removed selective to the first material of the insulating layers **32** to form conductive electrodes **46**, and optionally lower select gate electrodes (not shown). For example, back side trenches can be formed through the topmost insulating layer **32**, the upper select gate electrodes **48**, and the alternating stack (**32**, **42**) to the top surface of the substrate semiconductor layer **10**. In one embodiment, each back side trench can be formed in a same configuration as the back side trench of FIG. **1** within which a combination of a backside contact via structure **76** and a dielectric spacer **74** is formed.

Referring to FIG. **10**, the second material of the sacrificial material layers **42** can be removed selective to the first material of the insulating layers **32** to form conductive electrodes **46**. Back side trenches can be employed to introduce the etchants to the various levels in which the sacrificial material layers **42** are present. As used herein, a removal of a first material is "selective to" a second material if the removal process removes the first material at a rate that is at least twice the rate of removal of the second material. The ratio of the rate of removal of the first material to the rate of removal of the second material is herein referred to as a "selectivity" of the removal process for the first material with respect to the second material. An etchant that removes the second material of the sacrificial material layers **42** selective to the first material of the insulating layers **32** can be introduced through the back side trenches to laterally etch the second material of the sacrificial material layers **42** and to form back side recesses. For example, the sacrificial material layers **42** can be removed through the back side trenches to form respective back side recesses. Lower select gate back side recesses can be formed in volumes from which the bottommost sacrificial material layer **42** is removed. Subsequently, the back side recesses can be filled with a conductive material, for example, by chemical vapor deposition to form the conductive electrodes **46**, drain-side select gate electrodes **48**, and source-side select gate electrodes **44**. Each portion of the sacrificial material layers **42** can be replaced with a conductive electrode **46**, which can include, for example, an optional conductive liner **46**A (including, for example, titanium nitride) and a conductive fill material portion **46**B (including, for example, tungsten).

A drain region **63** can be formed at a top end of each combination of a memory film **50** and a semiconductor channel **60**. Contact via structures **92** can be formed on each drain region **63**, and bit lines **96** can be formed directly on the contact via structures **92** to access the drain regions **63**. A pair of semiconductor channels **60** can be formed in each memory opening over at least a portion of the pair of

memory films **50**. Source-side select transistors **120** may be provided in the first exemplary device structure.

A pair of laterally separated stacks (**52**, **54**) is formed. Each laterally separated stack includes a blocking dielectric **52** and a floating gate region **54**. A tunneling dielectric **56** contacts a pair of laterally separated stacks (**52**, **54**), and laterally surround a common semiconductor channel **60**.

In one embodiment, a first portion of the memory film **50** can comprises a first blocking dielectric **52**A and a first floating gate region **54**A which are located in a recess in the first portion of the stack. The first portion of the memory film **50** can further comprise a first portion of a tunnel dielectric **56**. The second portion of the memory film **50** can comprise a second blocking dielectric **52**B and a second floating gate region **54**B which are located in a recess in the second portion of the stack. The second portion of the memory film **50** further comprises a second portion of the tunnel dielectric **56**. The first portion of the tunnel dielectric **56** and the second portion of the tunnel dielectric **56** are located within the same tunnel dielectric **56**, which is a contiguous structure that is topologically homeomorphic to a torus. As used herein, an element is homeomorphic to a torus if the element can be continuously stretched or contracted to the torus without creating a new hole or destroying an existing hole. The tunnel dielectric **56** laterally surrounds at least a portion of a semiconductor channel **60**. If a dielectric core **62** is present, the semiconductor channel **60** laterally surrounds the dielectric core **62**.

In one embodiment, each of the first floating gate region **54**A and the second floating gate region **54**B can be a floating gate dielectric. In another embodiment, each of the first floating gate region **54**A and the second floating gate region **54**B can be a charge trapping dielectric.

Referring to FIGS. **9**A-**9**C and **10**, the first exemplary structure can comprise a device structure, which comprises a stack of alternating layers comprising insulating layers **32** and electrically conductive layers **46** and located over a substrate **8**, a memory stack structure **55** located within a memory opening extending through the stack, and a semiconductor channel **60** having a vertical portion that extends along a direction perpendicular to a top surface of the substrate **8**. The memory stack structure **55** comprises multiple sets of at least two charge storage elements (**54**A, **54**B) located around the semiconductor channel **60** at each level of the electrically conductive layers **46**. Each set of at least two charge storage elements (**54**A, **54**B) comprises charge storage elements (**54**A, **54**B) that are located at a same level as a respective electrically conductive layer **46**, and are electrically isolated from one another, electrically isolated from the semiconductor channel **60** by at least one respective tunneling dielectric **56**, and electrically isolated from respective control gate electrodes (as embodied by the respective electrically conductive layer **46** located at the same level) thereof by at least one respective blocking dielectric (**52**A, **52**B). In one embodiment, the device structure comprises separator insulator structures **43** extending through the stack, contacting portions of an outer sidewall of the memory stack structure **55**, and laterally separating the control gate electrodes **46** of the plurality of charge storage elements (**54**A, **54**B).

Each memory stack structure **55** can be located in a memory opening **49** that includes a lateral recess region **49**A at each level of the electrically conductive layers **46**. Each set of at least two charge storage elements **54** can be located within a respective lateral recess region **49**A. In one embodiment, each set of at least two charge storage elements **54** comprises at least two floating gate regions **54** that are physically disjoined from one another. In one embodiment, the separator insulator structures **43** extend through the stack and laterally separate control gate electrodes (embodied as physically disjoined portions of the electrically conductive layers **46**) of the plurality of charge storage elements **54**. The semiconductor channel **60** can be laterally spaced from the separator insulator structures **43** by a tunneling dielectric **56** at each level of the electrically conductive layer **46** and the insulating layers **32**. In one embodiment, a sidewall of each separator structure (i.e., each separator insulator structure **43**) is more proximal to the semiconductor channel **60** than outer sidewalls of the at least one blocking dielectric **52** within the same memory opening is to the semiconductor channel **60**.

In one embodiment, the at least one respective tunneling dielectric **56** can be a single contiguous tunneling dielectric that laterally surrounds the semiconductor channel **60** and is located at the level of the respective electrically conductive layer **46**. In one embodiment, the at least one respective blocking dielectric **52** can be a single contiguous blocking dielectric that contacts outer sidewalls of the respective single contiguous tunneling dielectric **56**.

The first exemplary structure can comprise a device structure, which comprises an alternating stack of insulating layers **32** and patterned electrically conductive layers **46** located over a substrate **8**, and a first pair (e.g., the left side pair in FIG. **9**C) of memory stack structures **55**A and a second pair (e.g., the right side pair in FIG. **9**C) of memory stack structures **55**B. Each memory stack structure **55** comprises a plurality of memory cells **54** arranged in a string extending in a first direction substantially perpendicular to the major surface **9** of the substrate **8** in a plurality of device levels. Each of the plurality of memory cells **54** is positioned in a respective one of the plurality of device levels above the substrate **8**. A semiconductor channel **60** extends through all levels within the plurality of device levels in each memory stack structure **55**. The memory device further comprises a first separator insulator structure **43**A vertically extending through the stack and contacting the first pair of memory stack structures **55**A, and a second separator insulator structure **43**B vertically extending through the stack and contacting the second pair of memory stack structures **55**B. First control gate electrodes **461** (embodied as portions of each electrically conductive layer **46** located between the first and second separator insulator structures **43**) within the patterned electrically conductive layers **46** contact the first and the second separator insulator structures **43**, a first side of each memory stack structure within the first pair of memory stack structures **55**A, and a first side of each memory stack structure within the second pair of memory stack structures **55**B.

In one embodiment, each set of at least two charge storage elements **54** can comprise charge storage elements that are located at the same level as a respective electrically conductive layer **46**, and are electrically isolated from one another, from the semiconductor channel **60** by at least one respective tunneling dielectric **60**, and from respective control gate electrodes thereof by at least one respective blocking dielectric **52**.

Referring to FIG. **11**, a circuit schematic is shown, which can be a circuit schematic of the array region of any of the exemplary device structure of the present disclosure. The circuit schematic represents a plurality of NAND strings. Each NAND string comprises a plurality of memory cells. Each memory cell in the NAND string comprises a portion of a first control gate electrode **461** (See FIG. **10**) located adjacent to a first portion **50**A of a memory film **50** and a

portion of a second control gate electrode **462** which is located adjacent to a second portion **50**B of the memory film **50**. The second control gate electrode **462** is electrically insulated from the first control gate electrode **461**.

Referring to FIGS. **10** and **11** collectively, the NAND memory device can comprise a substrate **8** having a major surface **9**. The first plurality of memory cells are arranged in the first NAND string extending in a first direction substantially perpendicular to the major surface **9** of the substrate **8** in a plurality of device levels. Each of the first plurality of memory cells is positioned in a respective one of the plurality of device levels above the substrate **8**. At least one first select gate electrode, e.g., a lower select gate electrode, can be located between the major surface **9** of the substrate **8** and the first plurality of memory cells, and at least one second select gate electrode, e.g., an upper select gate electrode **48**, is located above the first plurality of memory cells. The first control gate electrode **461** extends in a second direction substantially parallel to the major surface **9**, and the first control gate electrode **462** extends in the second direction and spaced apart from the respective first control gate electrode **461** in a third direction substantially parallel to the major surface **9** and transverse to the second direction. Each memory cell can comprise a first portion **50**A of a memory film **50** which is located between the first control gate electrode **461** and a first portion of a semiconductor channel **60**, and a second portion **50**B of the memory film **50** which is located between the first control gate electrode **462** and a second portion of the semiconductor channel **60**.

Thus, each memory cell of this embodiment includes a unitary portion (i.e., electrically continuous, single portion) of the semiconductor channel **60**; the first memory film portion **50**A, the second memory film portion **50**B, at least a portion of a first control gate electrode **461** located adjacent to the first memory film portion **50**A, and at least a portion of a first control gate electrode **462** located adjacent to the second memory film portion **50**B. The first control gate electrode **462** is electrically isolated from the first control gate electrode **461** and the first memory film. In other words, the memory cell of this embodiment includes a common channel and separate floating gate regions and control gate electrodes in the same horizontal device level.

A first word line can comprise a comb shaped word line WLL/**410** having a terrace contact portion (not shown) located in the first stepped contact region (not shown) and a plurality of prongs (**461**, **463**, **465**, **467**) extending from a terrace contact portion into the device region. The second word line can comprise a comb shaped word line WLR/**420** having a terrace contact portion (not shown) located in the second stepped contact region (not shown) and a plurality of prongs (**462**, **464**, **466**, **468**) extending from the terrace contact portion into the device region.

In a non-limiting illustrative example, a read operation of on a memory cell in a memory opening (e.g., MH**1**, MH**2**, MH**3**, MH**4**) can be performed by applying a voltage of about 5-7 V to a selected upper select gate electrode (e.g., SGDL/**481**), a voltage of about 0 V to an unselected upper select gate electrode (e.g., SGDR/**482**), a selected-line read voltage of about 3-5 V to a selected word line (e.g., WLL/**410**) connected to the selected control gate electrode (e.g., a first control gate electrode **461**), and an unselected-line read voltage of about 7-8 V to unselected word lines (e.g., WLR/**420**) connected to unselected control gate electrodes, negative 3-5V to second control gate electrode **462** in same level/cell as selected control gate electrode. A voltage of about 5-7 V can be applied to the selected lower select gate electrode (e.g., SGSL/**430**), and a voltage of about 0 V can be applied to the unselected lower select gate electrode (e.g., SGSR/**450**) connected to the same memory stack structure **55** (See FIG. **1**). A voltage of about 1-2 V can be applied to the selected bit line (e.g., BL**1**), and a voltage of about 0 V can be applied to the unselected bit lines (e.g., BL**2**, BL**3**, BL**4**). The source line SL/**76**, which can be embodied as a backside contact via structure **76**, can be biased at about 0-1 V. The various voltages can be scaled and/or adjusted as needed.

In a non-limiting illustrative example, a programming operation of on a memory cell can be performed by applying a voltage of about 2-3 V to a selected upper select gate electrode (e.g., SGDL/**481**), a voltage of about 0 V to an selected upper select gate electrode (e.g., SGDR/**482**), a selected-line programming voltage of about 18-20 V to a selected word line (e.g., WLL/**410**) connected to the selected control gate electrode (e.g., a first control gate electrode **461**), and an unselected programming voltage of about 7-9 V to unselected word lines (e.g., WLR/**420**) connected to unselected control gate electrodes. A voltage of about 0 V can be applied to the selected lower select gate electrode (e.g., SGSL/**430**), and a voltage of about 0 V can be applied to unselected lower select gate electrodes SGSR/**450**. A voltage of about 0 V can be applied to the selected bit line (e.g., BL**1**), and a voltage of about 2-3 V can be applied to the unselected bit lines (e.g., BL**2**, BL**3**, BL**4**). The source line SL can be biased at about 1-3 V. During the erase operation, the selected upper and lower select gate electrodes may be biased to 10-12 V, the selected bit line and source line may be biased to 18-20V and the rest of the lines and electrodes are unbiased (e.g., about 0V).

Referring to FIGS. **12**A and **12**B, a cut-out portion of an array region of a second exemplary device structure is illustrated according to a second embodiment of the present disclosure is illustrated. The cut-out portion can be embedded within the exemplary device structure of FIG. **1**. An alternating stack (**32**, **42**) of insulating layers **32** and sacrificial material layers **42** is formed over a substrate **8**. The alternating stack (**32**, **42**) can be the same as in the first embodiment.

An upper select gate electrode layer and another insulating layer **32** can be sequentially formed. The upper select gate electrode layer can be another sacrificial material layer **42**, or can be a conductive material layer including a conductive material such as doped polysilicon. Separator trenches **47** can be formed through the topmost insulating layer **32**, the upper select gate electrode layer, and the alternating stack (**32**, **42**) of insulating layers **32** and sacrificial material layers **42**. The separator trenches **47** can be formed, for example, by application and patterning of a photoresist layer over the topmost insulating layer **32**, and transfer of the pattern in the patterned photoresist layer through the topmost insulating layer **32**, the upper select gate electrode layer, and the alternating stack (**32**, **42**) to the top surface of the substrate **8** that is located at the bottom of the alternating stack (**32**, **42**). The separator trenches **47** laterally extend along a horizontal direction. In one embodiment, the separator trenches **47** can have a substantially uniform width, and can be parallel among one another. The separator trenches **47** can laterally divide the alternating stack (**32**, **42**) into a plurality of portions. If the select gate electrode layer includes a conductive material, the remaining portions of the select gate electrode layer can constitute an upper select gate electrode **48**. The pattern of the separator trenches **47** can be the same as the pattern of the separator insulator structures **43** illustrated in FIG. **19**, which is a horizontal cross-sectional view of the second exemplary device structure.

Referring to FIGS. **13**A and **13**B, each separator trench **47** can be filled with a dielectric material that is different from the second material. The dielectric material that fills the separator trenches **47** is herein referred to as a separator insulating material. For example, the separator insulating material can be undoped silicate glass or doped silicate glass. Excess portions of the separator insulating material can be removed from above the top surface of the alternating stack, for example, by chemical mechanical planarization (CMP), a recess etch, or a combination thereof. Remaining portions of the deposited separator insulating material constitutes separator insulator structures **43**. In one embodiment, the separator insulator structures **43** can laterally separate various portions of the alternating stack (**32**, **42**).

Referring to FIGS. **14**A and **14**B, memory openings **49** can be formed through the topmost insulating layer **32**, the upper select gate electrodes **48**, and the alternating stack (**32**, **42**) by application of a photoresist layer over the topmost insulating layer **32**, lithographic patterning of the photoresist layer, and transfer of the pattern in the photoresist layer through the topmost insulating layer **32**, the upper select gate electrodes **48**, and the alternating stack (**32**, **42**) by an anisotropic etch such as a reactive ion etch. The photoresist layer can be subsequently removed, for example, by ashing. Each memory opening **49** extends through the insulating cover layer, i.e., the topmost insulating layer **32**, and through the upper select gate electrodes **48**, and the underlying alternating stack (**32**, **42**) of insulating layers **32** and sacrificial material layers **42**. Each memory opening **49** can vertically extend from the top surface of the alternating stack (**32**, **42**) to the top surface of the substrate that is located at the bottom of the alternating stack (**32**, **42**). Each memory opening **49** can be located between a pair of inter-electrode insulator structures **31** and through a portion of a separator insulator structure **43**. In other words, a memory opening **49** can divide a separator insulator structure **43** into two physically disjoined portions. Each memory opening **49** in the alternating stack (**32**, **42**) can extend through the separator insulating material located in the separator insulator structures **43**, and divides a separator insulator structure **43** into two laterally disjoined portions.

Referring to FIGS. **15**A and **15**B, a memory film **50** is formed in each memory opening **49**. Each memory film **50** can include a blocking dielectric layer **52**L, a memory material layer **54**L, and a tunneling dielectric **56**. Each memory film **50** can be formed as a contiguous memory film on a substantially vertical sidewall of a memory opening **49**. A blocking dielectric **52**, a memory material layer **54**L, a tunnel dielectric **56**, and a first semiconductor channel portion **601** can be sequentially formed. Each of the blocking dielectric **52**, the memory material layer **54**L, and the tunnel dielectric **56** can be the same as in the first embodiment. In one embodiment, the memory material layer **54**L can comprises a charge trapping dielectric layer. The first semiconductor channel portion **601** can be a first material portion employed to form a semiconductor channel **60** (See FIG. **1**).

Each stack of a blocking dielectric layer **52**L, a memory material layer **54**L, a tunnel dielectric **56**, and a first semiconductor channel layer **601** can be formed, for example, by depositing, and subsequently anisotropically etching, a stack including a blocking dielectric layer, a charge storage material layer, a tunnel dielectric layer, and a first semiconductor channel layer. The first semiconductor channel layer can be a doped semiconductor material layer or an undoped semiconductor material layer. For example, the first semiconductor channel layer can be a doped polysilicon layer or an undoped polysilicon layer. A top surface of the substrate semiconductor layer **10** can be physically exposed at the bottom of each memory opening **49** after the anisotropic etch. A cavity **49'**, which is herein referred to as a memory cavity, is formed within the unfilled volume of each memory opening **49**.

Referring to FIGS. **16**A and **16**B, a second semiconductor channel layer can be deposited on the physically exposed top surfaces of the substrate semiconductor layer **10** and sidewalls of the first semiconductor channel portions **601** and over the topmost insulating layer **32**. The second semiconductor channel layer can be a doped semiconductor material layer or an undoped semiconductor material layer. For example, the second semiconductor channel layer can be a doped polysilicon layer or an undoped polysilicon layer. In one embodiment, the second semiconductor channel layer does not completely fill the cavity in each memory opening. The remaining cavity in each memory hole is herein referred to as a core cavity. In another embodiment, the second semiconductor channel layer completely fills the cavities **49'** in the memory openings **49**.

A dielectric core **62** can be formed within each core cavity, for example, by deposition of a dielectric material such as silicon oxide, and subsequent planarization of the dielectric material. The planarization of the dielectric material removes the portion of the deposited dielectric material from above the top surface of the horizontal plane including the top surface of the alternating stack (**32**, **42**). The planarization of the dielectric material can be performed, for example, by chemical mechanical planarization. The top portion of the second semiconductor channel layer can be removed during the planarization process. Each remaining portion of the second semiconductor channel layer constitutes a second semiconductor channel portion **602**. Each adjoining pair of a first semiconductor channel portion **601** and a second semiconductor channel portion **602** can be a portion of a semiconductor channel, which may optionally further include a horizontal top portion of the substrate semiconductor layer **10**. Each remaining portion of the dielectric material inside a memory opening constitutes a dielectric core **62**. A combination of a dielectric core **62**, a semiconductor channel **60**, and a memory film **50** may completely fill the volume of a memory opening as formed at the processing step of FIGS. **14**A and **14**B.

Referring to FIGS. **17**A and **17**B, the sacrificial material layers **42** are etched selective to the dielectric materials of the insulating layers **32** and the separator insulator structures **43** employing the same methods as in the first embodiment. In one embodiment, the selectivity of the etch process with respect to the dielectric materials of the insulating layers **32** and the separator insulator structures **43** can be greater than 10. In one embodiment, the sacrificial material layers **42** can include silicon nitride, and the insulating layers **32** and the separator insulator structures **43** can include silicon oxide. Lateral recesses, which are referred to as backside recesses, are formed in volumes from which the material of the sacrificial material layers **42** is removed. The backside recesses adjoin the backside contact trenches. A conductive material is deposited in the backside recesses by a conformal deposition method such as chemical vapor deposition. Portions of the conductive material that are deposited in the memory holes **49** and over the topmost insulating layer **32** are removed, for example, by an etch back process, which can include an isotropic etch or an anisotropic etch. Remaining portions of the deposited conductive material within the volumes of the sacrificial material layers **42** constitute conductive structures, which can include electrically con-

ductive layers **46** and lower-level select gate electrodes **44**. The lower-gate select gate electrodes **44** can be formed at the level of one or more bottom sacrificial material layers **42**, and the electrically conductive layers **46** can be formed in the levels of sacrificial material layers **42** other than the one or more bottom sacrificial material layers **42**.

The separator insulating material of the separator insulator structures **43** electrically insulates each first electrically conductive control gate layer from a respective second electrically conductive control gate layer located in a same device level. A backside contact via structure **76** (See FIG. **1**) can be formed through the alternating stack (**32**, **46**). At each level of the electrically conductive layers **46**, a first charge storage element and a second charge storage element that is electrically isolated from the first charge storage element is provided. Each pair of a first and second charge storage elements located at the same level can be two spatially spaced-apart portions within a same memory material layer **54**L.

The second exemplary device structure of FIGS. **17**A and **17**B can be incorporated into the exemplary device structure of FIG. **1** or derivatives therefrom. FIG. **18** illustrates the second exemplary device structure upon such incorporation. Each portion of the sacrificial material layers **42** can be replaced with a conductive electrode **46**, which can include, for example, an optional conductive liner **46**A (including, for example, titanium nitride) and a conductive fill material portion **46**B (including, for example, tungsten). A drain region **63** can be formed at a top end of each combination of a memory film **50** and a semiconductor channel **60**. Contact via structures **92** can be formed on each drain region **63**, and bit lines **96** can be formed directly on the contact via structures **92** to access the drain regions **63**. A pair of semiconductor channels **60** can be formed in each memory opening over at least a portion of the pair of memory films **50**.

An exemplary layout of the various elements is illustrated in FIGS. **19** and **20**. FIG. **19** is a see-through top-down view in which dielectric material layers overlying the topmost surface of the memory stack structures **55** have been omitted for clarity. FIG. **20** is a bird's eye view of a cut-out portion of a NAND memory structure in which dielectric material layers are not shown for clarity.

A first row **155** and second row **255** of memory stack structures **55** extend through the respective first and second separator insulator structures (**43**A, **43**B). A continuous first control gate electrode **461** extends between the first **43**A and the second **43**B separator structures. Control gate electrode **461** is located adjacent to a first (right) side of the first separator structure **43**A, adjacent to a first (right) side of the first row **155** of the memory stack structures, adjacent to a first (left) side of the second separator structure **43**B, and adjacent to a first (left) side of the second row **255** of the memory stack structures.

A second control gate electrode **462** is located adjacent to a second (left) side of the first separator structure **43**A, and adjacent to the second (left) side of the first row **155** of the memory stack structures. A third control gate electrode **463** is located adjacent to a second (right) side of the second row **255** of the memory stack structures, and adjacent to a second (right) side of the second separator structure **43**B. Electrodes **462** and **463** may comprise finger portions of the same comb shaped word line **46**B, while electrode **461** may comprise a finger portion of a different comb shaped word line **46**A.

Source-side select transistors **120** may be provided in the exemplary device structure. Within each memory opening, a first portion of a memory film **50** located on the first side of the dielectric core **162** is electrically insulated from a second portion of the memory film **50** located on the second side of the dielectric core **162**. Within each memory opening, the dielectric core **162** electrically insulates a first portion of the semiconductor channel **60** located on the first side of the dielectric core **162** from a second portion of the semiconductor channel **60** located on the second side of the dielectric core **162**.

Referring to FIGS. **17**A, **17**B, and **18**-**20**, the second exemplary structure can include a memory device, which comprises a stack of alternating layers comprising insulating layers **32** and electrically conductive layers **46** located over a substrate **8**, a memory stack structure **55** located within a memory opening extending through the stack, and including semiconductor channel **60** having a vertical portion that extends along a direction perpendicular to a top surface of the substrate **8**. The memory stack structure **55** comprises multiple sets of at least two charge storage elements located around the semiconductor channel **60** at each level of the electrically conductive layers **46**. Each set of at least two charge storage elements comprises charge storage elements that are located at the same level as a respective electrically conductive layer **46**, and are electrically isolated from one another, from the semiconductor channel **60** by at least one respective tunneling dielectric **56**, and from respective control gate electrodes (which are adjacent portions of the electrically conductive layers **46**) thereof by at least one respective blocking dielectric **52**.

The separator insulator structures **43** extend through the stack, contact portions of outer sidewalls of the memory stack structures **55**, and laterally separate the control gate electrodes **46** of the plurality of charge storage elements (which are portions of the memory material layer **54**L). The patterned electrically conductive layers **46** comprise control gate electrodes of the multiple sets of at least two charge storage elements **54**. Each set of at least two charge storage elements comprises two regions within a respective contiguous memory material layer **54**L that are adjacent to respective control gate electrodes and located at the same level.

Separator insulator structures **43** can extend through the stack, contact sidewalls of the memory stack structure **55**, and laterally separate the control gate electrodes of the plurality of charge storage elements. In one embodiment, the at least one blocking dielectric can be a single contiguous blocking dielectric layer **52**L contacting each of the electrically conductive layers **46** and each set of at least two charge storage elements. The at least one respective tunneling dielectric is a single contiguous tunneling dielectric **56** that vertically extends through the stack and laterally surrounds the semiconductor channel **60**.

The second exemplary structure can include a memory device, which comprises an alternating stack of insulating layers **32** and patterned electrically conductive layers **46** located over a substrate **8**, a first pair (e.g., the left side pair **55**A in FIG. **17**A) of memory stack structures **55** and a second pair (e.g., the right side pair **55**B in FIG. **17**A) of memory stack structures **55**. Each memory stack structure **55** comprises a plurality of memory cells arranged in a string extending in a first direction substantially perpendicular to the major surface **9** of the substrate **8** in a plurality of device levels. Each of the plurality of memory cells is positioned in a respective one of the plurality of device levels above the substrate **8**. A semiconductor channel **60** extends through all levels within the plurality of device levels in each memory stack structure **55**. The memory device further comprises a first separator insulator structure **43**A vertically extending through the stack and contacting the first pair of memory

stack structures **55**A, and a second separator insulator structure **43**B vertically extending through the stack and contacting the second pair of memory stack structures **55**B. First control gate electrodes **461** within the patterned electrically conductive layers **46** contact the first and the second separator insulator structures (**43**A, **43**B), a first side of each memory stack structure within the first pair of memory stack structures **55**A, and a first side of each memory stack structure within the second pair of memory stack structures **55**B.

Second control gate electrodes **462** within the patterned electrically conductive layers contact a second side of the first separator insulator structure **43**A and a second side of the first pair **55**A of the memory stack structures, and third control gate electrodes **463** within the patterned electrically conductive layers **46** contact a second side of the second separator insulator structure **43**B and a second side of the second pair **55**B of the memory stack structures. Each set of at least two charge storage elements comprises two regions within a contiguous memory material layer **54**L that are adjacent to the respective control gate electrodes **46** and located at the same level.

The third, fourth and fifth embodiments of the present disclosure provide devices and methods for electrically isolating different lateral parts of a memory cell in one device level. In these embodiments, a three dimensional NAND device includes a common vertical channel and electrically isolated control gate electrodes on different lateral sides of the channel in each device level to form different lateral portions of a memory cell in each device level. Dielectric separator structures are located between and electrically isolate the control gate electrodes. The lateral (e.g., left and right) portions of the memory cell in each device level may be electrically isolated by at least one cell level isolation feature, such as boron doping ungated portions of the channel adjacent to the separator structures according to the third and fourth embodiments, and/or storing electrons in the separator structure according to the fifth embodiment.

Referring to FIGS. **21**A and **21**B, a third exemplary device structure according to a third embodiment of the present disclosure can be derived from the first exemplary structure of FIGS. **2**A and **2**B or from the second exemplary structure of FIGS. **12**A and **12**B by employing semiconductor layers **146** instead of sacrificial material layers **42** and optional upper select gate electrodes **48**. Thus, the material layers between each vertically neighboring pair of insulator layers **32** can be semiconductor layers **146**. The semiconductor layers **146** can be sufficiently doped with electrical dopants to render the semiconductor layers **146** conductive. In other words, the semiconductor layers **146** can include a doped (e.g., heavily or degenerately doped) semiconductor material having electrical conductivity greater than 1.0×10^5 S/cm. In one embodiment, the semiconductor layers **146** can comprise doped polysilicon, doped amorphous silicon, a doped silicon-containing alloy such as doped silicon-germanium alloy, or combinations thereof. Separator trenches **47** can be formed through the alternating stack (**32**, **146**) by applying and patterning a photoresist layer over the alternating stack (**32**, **146**), and anisotropically etching portions of the alternating stack (**32**, **146**) that are not masked by the patterned photoresist layer. The etch chemistry employed to etch the separator trenches **47** can be selected to alternately etch the insulator layers **32** and the semiconductor layers **146**. The photoresist layer can be subsequently removed, for example, by ashing. The alternating stack (**32**, **146**) can be divided into multiple laterally disjoined portions by the separator trenches **47**. In an alternative embodiment, the stack contains sacrificial layers **42** instead of the semiconductor layers **146** and the sacrificial layers **42** are subsequently replaced with metallic (e.g., tungsten, TiN, WN, etc.) electrically conductive layers **46**, as described above.

Referring to FIGS. **22**A and **22**B, each separator trench **47** can be filled with a doped dielectric material, which is a dielectric material that includes electrical dopant atoms. The electrical dopant atoms can be p-type dopant atoms such as boron, or can be n-type dopant atoms such as phosphorus or arsenic. In one embodiment, the dielectric material can be doped silicate glass including the electrical dopant atoms as dopants. For example, the dielectric material can be borosilicate glass (BSG), phosphosilicate glass (PSG), or arsenosilicate glass (ASG). The conductivity type of the dopant atoms incorporated into the doped silicate glass can be the same as the conductivity type of semiconductor channels to be subsequently formed as a component of each memory stack structure. The doped dielectric material can be deposited into the separator trenches **47** employing a conformal deposition method such as low pressure chemical vapor deposition ((LPCVD). Excess portions of the doped dielectric material can be removed from above the top surface of the alternating stack, for example, by chemical mechanical planarization (CMP), a recess etch, or a combination thereof. Remaining portions of the deposited doped dielectric material constitutes separator structures **45** including a doped silicate glass (which is a dielectric material). In one embodiment, the separator structures **45** are doped silicate glass separator structures such as borosilicate glass separator structures.

Referring to FIGS. **23**A and **23**B, the processing steps of FIGS. **4**A and **4**B can be employed to form memory openings **49** that divide the separator structures **45** into multiple disjoined separator structure **45**. A photoresist layer can be applied and lithographically patterned over the alternating stack (**32**, **146**) to form an array of openings that overlie portions of the separator structures **45**. Portions of the alternating stack (**32**, **146**) and the separator structures **45** that are not masked by the patterned photoresist layer can be etched to form the memory openings **49**. In one embodiment, the etch chemistry employed to etch the memory openings **49** can be selected to indiscriminately etch the insulator layers **32**, the semiconductor layers **146**, and the separator structures **45**. Alternatively, combinations of various etch chemistries can be employed to alternately etch the insulator layers **32**, the semiconductor layers **146**, and the separator structures **45** in any sequence. Each separator structure **45** can be divided into a plurality of laterally spaced separator structures **45** by the memory openings **49**. A plurality of separator structures **45** laterally spaced by the memory openings **49** is provided. Each of the plurality of separator structures **45** and memory openings **49** extend through the alternating stack (**32**, **146**). Each of the memory openings **49** and the separator structures **45** can extend to the top surface of the substrate semiconductor layer **10**.

Referring to FIGS. **24**A-**24**C, portions of the semiconductor layers **146** are etched selectively with respect to the insulating layers **32** from inside each memory opening **49**. Thus, the memory openings **49** are selectively laterally expanded at each level of the semiconductor layers **146**. A lateral recess region **49**A is formed at each level of the semiconductor layers **146** within each memory opening **49**.

Each lateral recess region **49**A is formed at the level of a respective doped semiconductor layer **146** through a memory opening **49**. Specifically, the lateral recess regions **49**A can be formed, for example, by a selective etch process

in which the semiconductor material of the semiconductor layers **146** is etched selective to the insulator material of the insulating layers **32**. In one embodiment, the selectivity of the etch process that etches the semiconductor layers **146** can be greater than 10 with respect to the dielectric materials of the separator structures **45** and the insulating layers **32**. The selective etch process laterally recesses the sidewalls of the semiconductor layers **146** farther away from each memory opening **49** than sidewalls of adjoining insulating layers **32**. The distance of the lateral recess for the lateral recess regions **49**A can be selected such that the lateral recess regions **49**A from neighboring memory openings **49** do not merge after termination of the selective etch process. In one embodiment, each lateral recess region **49**A can have an annular shape.

Referring to FIGS. **25**A-**25**C, a blocking dielectric **152** is formed within each lateral recess region **49**A by conversion of surface portions of the semiconductor layers **146** at each lateral recess region **49**A of the memory openings **49**. In this case, the blocking dielectrics **152** comprise a dielectric material derived from the semiconductor material of the semiconductor layers **146**. In one embodiment, the blocking dielectrics **152** comprise a dielectric oxide, a dielectric oxynitride, and/or a dielectric nitride of the semiconductor material of the semiconductor layers **146**. The conversion of the surface portions of the semiconductor material of the semiconductor layers **146** into the blocking dielectrics **152** can be performed by thermal oxidation, plasma oxidation, thermal nitridation, and/or plasma nitridation. The thickness of each blocking dielectric **152** can be in a range from 6 nm to 24 nm, although lesser and greater thicknesses can also be employed. A horizontal dielectric material portion **252** including an oxide, an oxynitride, and/or a nitride of the semiconductor material of the substrate semiconductor layer **10** can be formed by conversion of physically exposed surface portions of the substrate semiconductor layer **10** into a dielectric material. In an alternative embodiment, the blocking dielectric may be formed by depositing one or more blocking dielectric layers and removing the portion of the blocking dielectric layer(s) from above the stack.

Referring to FIGS. **26**A-**26**C, a memory material layer **154**L can be deposited over the alternating stack and in the memory openings **49** by a conformal deposition method. In one embodiment, the memory material layer **154**L includes a semiconductor material, which can be a doped semiconductor material or an intrinsic semiconductor material. The memory material layer **154**L can include polysilicon, amorphous silicon, a silicon-germanium alloy, or a stack thereof. The memory material layer **154**L can completely fill each lateral recess region **49**A.

Referring to FIGS. **27**A-**27**C, portions of the memory material layer **154**L can be isotropically and/or anisotropically etched from outside of the lateral recess regions **49**A within each memory opening **49**. Remaining portions of the deposited semiconductor material of the memory material layer **154**L constitute floating gate regions **54**, which are charge storage elements. Multiple sets at least two charge storage elements are formed within each memory opening **49** such that each set of at least two charge storage elements (i.e., the floating gate regions **54**) is formed within the same memory opening **49** and at the same level, which is a level of the semiconductor layers **146**. Each set of at least two charge storage elements **54** is formed within each lateral recess region **49**A on a respective blocking dielectric **152**. In one embodiment, inner surfaces (surfaces proximal to the geometrical center axis of each memory opening **49**) of the floating gate electrodes **54** can be coplanar with sidewalls of the insulator layers **32** in each memory opening **49**, or can be farther away from the center axis of the respective memory opening **49** than the sidewall of the insulator layers **32** in each memory opening **49**.

Referring to FIGS. **28**A-**28**C, tunneling dielectrics **156** can be formed by conversion of the surface portions of the floating gate regions **54**, which are the multiple sets at least two charge storage elements. The tunneling dielectrics **156** can comprise an oxide, an oxynitride, and/or a nitride of the semiconductor material of the floating gate electrodes **54**. The conversion of the surface portions of the floating gate regions **54** into the tunneling dielectrics **156** can be performed by thermal oxidation, plasma oxidation, thermal nitridation, and/or plasma nitridation. The thickness of each tunneling dielectric **156** can be in a range from 1.5 nm to 10 nm, although lesser and greater thicknesses can also be employed. In an alternative embodiment, the tunneling dielectric may be formed by depositing one or more tunneling dielectric layers and removing the portion of the tunneling dielectric layer(s) from above the stack.

Referring to FIGS. **29**A-**29**C, the processing steps of FIGS. **8**A-**8**C and **9**A-**9**C can be performed to form a semiconductor channel **60** and a dielectric core **62** in each memory opening **49**. In one embodiment, the plurality of separator structures **45** can comprise a doped silicate glass including dopant atoms, and each semiconductor channel **60** can be formed directly on the plurality of separator structures **45**.

Referring to FIGS. **30**A-**30**C, an anneal process can be performed at an elevated temperature to non-uniformly dope each semiconductor channel **60**. The elevated temperature of the anneal process can be in a range from 600° C. to 1,000° C., although lesser and greater temperatures can also be employed. The dopant atoms diffuse from the plurality of separator structures **45** into proximal portions of the semiconductor channels **60**, i.e., portions of the semiconductor channels **60** that are physically proximal to the interface between the semiconductor channel **60** and the separator structures **45** that are in physical contact with the semiconductor channel **60**.

The temperature and duration of the anneal process can be selected such that the predominant portion of the dopant atoms diffusing out from the separator structures **45** are located near the interfaces between the semiconductor channel **60** and the separator structures **45**, and the composition of the portions of the semiconductor channel **60** that are farther away from the interfaces between the semiconductor channel **60** and the separator structures **45** remain substantially unchanged. For example, the semiconductor channel **60** after the anneal process can have a plurality of alternating base doping semiconductor channel portions **6**A having the same dopant concentration as the semiconductor channel **60** prior to the anneal process, and enhanced doping semiconductor channel portions **6**B having a higher dopant concentration than the base doping semiconductor channel portions. The base doping semiconductor channel portions **6**A face the respective separator structures **45** while the enhanced doping semiconductor channel portions **6**B face the respective control gate electrodes **146**. In this case, each semiconductor channel **60** can have an azimuthally modulated dopant profile in which a dopant concentration changes as a function of an azimuthal angle around a geometrical center of the vertical portion of the semiconductor channel **60**. In other words, the base doping semiconductor channel portions **6**A and the enhanced doping semiconductor channel portions **6**B alternate around the geometrical center (e.g., around a vertical axis).

In one embodiment, the doped silicate glass of the separator structures **45** can be a borosilicate glass. The atomic concentration of the boron atoms in the borosilicate glass can be in a range from 1% to 20%, although lesser and greater atomic concentrations can also be employed.

Referring to FIGS. **31**A-**31**C, the processing steps of FIG. **10** can be performed to form a drain region **63** in an upper portion of each memory opening **49**. Subsequent processing steps can be performed as in the first embodiment to form metal interconnect structures.

The third exemplary structure can comprise a memory device that includes a stack of alternating layers comprising insulating layers **32** and electrically conductive layers **146** (e.g., the doped semiconductor material layers or metallic layers) and located over a substrate **8**, a memory stack structure **55** located within a memory opening extending through the stack, and having a semiconductor channel **60** having a vertical portion that extends along a direction perpendicular to a top surface of the substrate **8**. The memory stack structure **55** comprises multiple sets of at least two charge storage elements (embodied as multiple sets of floating gate regions **54** located at the same level) located around the semiconductor channel **60** at each level of the electrically conductive layers **146**. Each set of at least two charge storage elements **54** comprises charge storage elements that are located at the same level as a respective electrically conductive layer **146**, and are electrically isolated from one another, from the semiconductor channel **60** by at least one respective tunneling dielectric **156**, and from respective control gate electrodes (which are portions of the electrically conductive layers **146**) thereof by at least one respective blocking dielectric **152**. Separator insulator structures **45** can extend through the stack, can contact portions of an outer sidewall of the memory stack structure **55**, and can laterally separate the control gate electrodes of the plurality of charge storage elements **54**.

The semiconductor channel **60** has a vertical portion that extends along a direction perpendicular to a top surface of the substrate **8**. The semiconductor channel **60** has an azimuthally modulated dopant profile in which a dopant concentration changes as a function of an azimuthal angle around a geometrical center of the vertical portion of the semiconductor channel **60**.

The patterned electrically conductive layers **146** are provided at each level of the material layers by forming the material layers as doped semiconductor layers, which are conductive layers. Each memory stack structure **55** comprises multiple sets of at least two floating gate regions **54** located at a same level, which are at least two charge storage elements located around the semiconductor channel **60** at each level of the electrically conductive layers **146**.

Each memory stack structure **55** can be located in a memory opening **49** that includes a lateral recess region **49**A at each level of the electrically conductive layers **146**. Each set of at least two charge storage elements **54** is located within a respective lateral recess region **49**A. Each set of at least two charge storage elements comprises at least two floating gate regions **54** that are physically disjoined from one another.

Each semiconductor channel **60** comprises a plurality of base doping semiconductor channel portions **6**A and a plurality of enhanced doping semiconductor channel portion **6**B located at each level of the electrically conductive layers **146**. The enhanced doping semiconductor channel portions **6**B have a greater dopant concentration than the base doping semiconductor channel portions **6**A. In one embodiment, the base doping semiconductor channel portions **6**A can have a dopant concentration in a range from $1.0\times10^{14}/cm^3$ to $1.0\times10^{18}/cm^3$, and the enhanced doping semiconductor channel portions **6**B can have a dopant concentration in a range from $1.0\times10^{17}/cm^3$ to $1.0\times10^{19}/cm^3$, although lesser and greater dopant concentrations can also be employed for each of the base doping semiconductor channel portions **6**A and the enhanced doping semiconductor channel portions **6**B. In one embodiment, each of the base doping semiconductor channel portions **6**A contact the blocking dielectric and each of the enhanced doping semiconductor channel portions **6**B can contact the separator insulator structures **45**.

In one embodiment, the separator insulator structures **45** comprise a doped silicate glass including the same dopant atoms as the dopant atoms of the enhanced semiconductor channel portions **6**B. For example, the separator insulator structures **45** comprise borosilicate glass (BSG) and the enhanced semiconductor channel portions **6**B can comprise boron atoms as the electrical dopants.

In one embodiment, each set of the at least two charge storage elements (embodied as a set of floating gate regions **54** located at the same level in a memory opening **49**) comprises a semiconductor material, and each set of at least two tunneling dielectrics **156** (contacting the floating gate regions **54** located at the same level of the memory opening **49**) comprises a dielectric oxide of the semiconductor material of the set of the at least two charge storage elements. In one embodiment, the at least one respective blocking dielectric **156** in contact with a set of at least two charge storage element at a level in a memory opening **49** can be a set of at least two blocking dielectrics **156** that are physically disjoined from one another and located at the level of the respective electrically conductive layer **146**. In one embodiment, the electrically conductive layers **146** comprise a doped semiconductor material, and each set of at least two tunneling dielectrics **156** comprises a dielectric oxide of the doped semiconductor material of the electrically conductive layers **146**.

The patterned electrically conductive layers **146** are provided at each level of the material layers by forming the material layers as doped semiconductor layers, which are conductive layers. Each memory stack structure **55** comprises multiple sets of at least two floating gate regions **54** located at a same level, which are at least two charge storage elements located around the semiconductor channel **60** at each level of the electrically conductive layers **146**.

The third exemplary structure can comprise a memory device that includes an alternating stack of insulating layers **32** and patterned electrically conductive layers **146** located over a substrate **8**, a first pair of memory stack structures **55**A, and a second pair of memory stack structures **55**B. Each memory stack structure **55** comprises a plurality of memory cells arranged in a string extending in a first direction substantially perpendicular to the major surface **9** of the substrate **8** in a plurality of device levels.

Each of the plurality of memory cells is positioned in a respective one of the plurality of device levels above the substrate. A semiconductor channel **60** extends through all levels within the plurality of device levels in each memory stack structure **55**. A first separator insulator structure **45**A vertically extends through the stack and contacts the first pair of memory stack structures **55**A. A second separator insulator structure **45**B vertically extends through the stack and contacting the second pair of memory stack structures **55**B. First control gate electrodes **461** within the patterned electrically conductive layers **146** contact the first and the second separator insulator structures (**45**A, **45**B), a first side of each memory stack structure within the first pair of

memory stack structures **55**A, and a first side of each memory stack structure within the second pair of memory stack structures **55**B.

Referring to FIGS. **32**A-**32**C, a fourth exemplary device structure according to the fourth embodiment of the present disclosure can be derived from the third exemplary structure of FIGS. **29**A-**29**C by employing a sacrificial material for the separator structures **45**, and by forming separator cavities **7** by removing the separator structures **45** selective to the memory stack structures **55**, the alternating stack (**32**, **146**), and the substrate semiconductor layer **10**. In this case, the separator structures **45** are formed as sacrificial separator structures. For example, the separator structures **45** can comprise a polymer material, such as a silicon and nitrogen containing polymer material, porous or non-porous organosilicate glass, borophosphosilicate glass (BPSG), and/or silicon nitride. For example, the separator structures **45** may comprise polysilazane. The removal of the separator structures **45** can be performed by an isotropic etch process or an anisotropic etch process that is selective to the materials of the memory stack structures **55** and the alternating stack (**32**, **146**). The separator cavities **7** are cavities that laterally separate physically disjoined portions of the alternating stack (**32**, **146**). A portion of an outer sidewall of a semiconductor channel **60** is physically exposed to each separator cavity **7**.

Referring to FIGS. **33**A-**33**C, enhanced doping semiconductor channel portions **6**B can be formed by introducing electrical dopants through the separator cavities **7** into portions of the semiconductor channels **60** that are proximal to the separator cavities **7**. Each semiconductor channel **60** can be non-uniformly doped by introduction of the electrical dopants only into portions that are proximal to the separator trenches **7**. In one embodiment, the electrical dopants can be introduced into the proximal portions of the semiconductor channels **60** by gas phase doping at elevated temperature and/or plasma doping.

The process parameters of the gas phase doping process and/or the plasma doping process can be selected such that the predominant portion of the dopant atoms incorporated into the semiconductor channels **60** are located near the interfaces between the semiconductor channel **60** and the separator cavities **7**, and the composition of the portions of the semiconductor channel **60** that are farther away from the interfaces between the semiconductor channel **60** and the separator trenches **7** remain substantially unchanged. For example, the semiconductor channel **60** after the doping process can have a plurality of base doping semiconductor channel portions **6**A having the same dopant concentration as the semiconductor channel **60** prior to the doping process, and a plurality of enhanced doping semiconductor channel portions **6**B having a higher dopant concentration than the semiconductor channel **60** prior to the doping process. In this case, each semiconductor channel **60** can have an azimuthally modulated dopant profile in which a dopant concentration changes as a function of an azimuthal angle around a geometrical center of the vertical portion of the semiconductor channel **60**.

Referring to FIGS. **34**A-**34**C, a dielectric material is deposited into the separator trenches **7** to form separator insulator structures (**75**, **7**A, **7**B). The separator insulator structures (**75**, **7**A, **7**B) include a dielectric material such as silicon oxide (including undoped silicate glass and doped silicate glass such as borosilicate glass), silicon nitride, silicon oxynitride, organosilicate glass, or a combination thereof. The dielectric material of the separator insulator structures (**75**, **7**A, **7**B) can be deposited by a conformal deposition method (such as low pressure chemical vapor deposition) or a self-planarizing deposition process (such as spin coating). Excess portions of the deposited dielectric material can be removed, for example, by chemical mechanical planarization (CMP) and/or a recess etch. Remaining portions of the deposited dielectric material in the separator trenches **7** constitute the separator insulator structures (**75**, **7**A, **7**B).

The fourth exemplary structure can have the same features as the third exemplary structure except for the replacement of the separator insulator structures **45** of the third embodiment with the separator insulator structures (**75**, **7**A, **7**B) of the fourth embodiment, which can differ from the composition of the separator insulator structures **45** of the third embodiment. In one embodiment, the separator insulator structures (**75**, **7**A, **7**B) of the fourth embodiment can comprises a material selected from undoped dielectric material, such as silicon nitride, undoped silicate glass, and organosilicate glass.

A first separator insulator structure **7**A vertically extends through the stack and contacts the first pair of memory stack structures **55**A. A second separator insulator structure **7**B vertically extends through the stack and contacting the second pair of memory stack structures **55**B. First control gate electrodes **461** within the patterned electrically conductive layers **146** contact the first and the second separator insulator structures (**7**A, **7**B), a first side of each memory stack structure within the first pair of memory stack structures **55**A, and a first side of each memory stack structure within the second pair of memory stack structures **55**B.

Referring to FIGS. **35**A and **35**B, a fifth exemplary device structure according to a fifth embodiment of the present disclosure can be the same as the third exemplary device structure of FIGS. **22**A and **22**B. Thus, the stack of alternating layers (**32**, **146**) can comprise an alternating stack of insulator layers **32** and semiconductor layers **146**. The semiconductor layers **146** can be sufficiently doped with electrical dopants to render the semiconductor layers **146** conductive. In other words, the semiconductor layers **146** can include a doped semiconductor material having electrical conductivity greater than 1.0×10^5 S/cm. In one embodiment, the semiconductor layers **146** can comprise doped polysilicon, doped amorphous silicon, a doped silicon-containing alloy such as doped silicon-germanium alloy, or combinations thereof.

The laterally-extending cavities can be separator trenches **47**, which are formed through the alternating stack (**32**, **146**) by applying and patterning a photoresist layer over the alternating stack (**32**, **146**), and anisotropically etching portions of the alternating stack (**32**, **146**) that are not masked by the patterned photoresist layer. The etch chemistry employed to etch the separator trenches **47** can be selected to alternately etch the insulator layers **32** and the semiconductor layers **146**. The photoresist layer can be subsequently removed, for example, by ashing. The alternating stack (**32**, **146**) can be divided into multiple laterally disjoined portions by the separator trenches **47**. Each separator trench **47** extends through the stack of alternating layers (**32**, **146**). The remaining portions of the stack of alternating layers (**32**, **146**) are laterally spaced from each other by the separator trenches **47**.

Referring to FIGS. **36**A and **36**B, a dielectric liner **141** can be formed on the sidewalls of each separator trench **47**. The dielectric liners **141** can be formed, for example, by formation of a dielectric material layer including a first dielectric material, and by a subsequent anisotropic etch (such as a reactive ion etch) that removes horizontal portions of the

dielectric material layer to form dielectric spacers **141**. The dielectric material can include silicon nitride, silicon oxynitride or silicon oxide.

In one embodiment, the first dielectric material of the dielectric material layer (and the dielectric spacers **141**) can comprise a dielectric material that can trap electrical charges. In one embodiment, the first dielectric material can comprise silicon nitride or silicon oxynitride. As used herein, a silicon oxynitride refers to a dielectric compound having a chemical formula $Si_{3+\delta}N_{4-x}O_{1.5x}$, in which x is in a range from 0.1 to 3.9, and δ is in a range from −0.2 to 0.2. In one embodiment, the silicon oxynitride of the present disclosure can be nitrogen-rich, i.e., can have a value of x that is in a range from 0.1 to 2.0. In one embodiment, the silicon oxynitride of the present disclosure can have a value of x in a range from 0.1 to 1.0. In one embodiment, the silicon oxynitride of the dielectric material layer can be formed by deposition of a silicon oxide layer, followed by a nitridation process. The silicon oxide layer can be conformally deposited, for example, by low pressure chemical vapor deposition (LPCVD) or atomic layer deposition (ALD). The thickness of the silicon oxide layer can be in a range from 1 nm to 30 nm (such as from 3 nm to 10 nm), although lesser and greater thicknesses can also be employed. Subsequently, the silicon oxide layer can be converted into a silicon oxynitride layer by a nitridation process, which can be a thermal nitridation process or a plasma nitridation process. The temperature and the duration of the thermal nitridation process, or the plasma intensity and the duration of the plasma nitridation process can be selected to provide the target material composition for the silicon oxynitride layer.

Alternatively, the silicon oxynitride of the dielectric material layer can be formed by deposition of a silicon nitride layer, followed by an oxidation process. The silicon nitride layer can be conformally deposited, for example, by low pressure chemical vapor deposition (LPCVD) or atomic layer deposition (ALD). The thickness of the silicon nitride layer can be in a range from 1 nm to 30 nm (such as from 3 nm to 10 nm), although lesser and greater thicknesses can also be employed. Subsequently, the silicon nitride layer can optionally be converted into a silicon oxynitride layer by an oxidation process, which can be a thermal oxidation process or a plasma oxidation process. The temperature and the duration of the thermal oxidation process, or the plasma intensity and the duration of the plasma oxidation process can be selected to provide the target material composition for the silicon oxynitride layer. Otherwise, the silicon nitride layer may remain without being converted to silicon oxynitride.

In another embodiment, the first dielectric material of the dielectric material layer (and the dielectric spacers **141**) can comprise a material that does not trap electrical charges. In one embodiment, the first dielectric material can comprise silicon oxide, i.e., SiO_2. In this case, a silicon oxide layer can be formed by conformal deposition of silicon oxide, for example, by low pressure chemical vapor deposition (LPCVD) or atomic layer deposition (ALD). The thickness of the silicon oxide layer can be in a range from 1 nm to 30 nm (such as from 3 nm to 10 nm), although lesser and greater thicknesses can also be employed.

The anisotropic etch can be a reactive ion etch that etches the horizontal portions of the dielectric material layer. Optionally, the anisotropic etch can be selective to the materials of the underlying layers such as the substrate semiconductor layer **10** and/or the alternating stack (**32**, **146**). Each remaining vertical portion of the dielectric material layer constitutes a dielectric spacer **141**. The thickness of each dielectric spacer **141** can be in a range from 1 nm to 30 nm (such as from 3 nm to 10 nm), although lesser and greater thicknesses can also be employed.

Referring to FIGS. **37**A and **37**B, the unfilled volume of each separation trench **47** can be filled with a second dielectric material, which is different from the first dielectric material. If the first dielectric material comprises a dielectric material that traps electrical charges, the second dielectric material can comprise a material that does not trap electrical charges. For example, if the first dielectric material of the dielectric spacer **141** comprises silicon nitride or silicon oxynitride, then the second dielectric material can comprise silicon oxide. The silicon oxide can be undoped silicon oxide or doped silicon oxide. If the first dielectric material of the dielectric spacer **141** comprises a dielectric material that does not trap electrical charges, the second dielectric material can comprise a material that traps electrical charges. For example, if the first dielectric material of the dielectric spacer **141** comprises silicon oxide, the second dielectric material can comprise silicon nitride or silicon oxynitride.

The second dielectric material can be deposited by a conformal deposition, a self-planarizing deposition process, and an optional planarization process. For example, if the second dielectric material comprises silicon oxide, the silicon oxide material can be deposited by low pressure chemical vapor deposition (LPCVD), atomic layer deposition (ALD), and/or spin coating. Excess portions of the silicon oxide material can be removed, for example, by a planarization process, which can employ chemical mechanical planarization (CMP) and/or a recess etch. If the second dielectric material comprises silicon nitride, the silicon nitride material can be deposited by low pressure chemical vapor deposition (LPCVD) and/or atomic layer deposition (ALD), and can be subsequently planarized by chemical mechanical planarization (CMP) and/or a recess etch. The topmost surface of the alternating stack (**32**, **146**) can be employed as a stopping layer during the planarization process. Each remaining portion of the deposited second dielectric material constitutes a dielectric fill material portion **142**, which is laterally surrounded by a dielectric spacer **141**. Each adjoining pair of a dielectric spacer **141** and a dielectric fill material portion **142** embedded therein constitutes a separator structure **45**, which laterally separates a pair of physically disjoined portions of the alternating stack (**32**, **146**).

Referring to FIGS. **38**A and **38**B, the processing steps of FIGS. **4**A and **4**B can be employed to form memory openings **49** that divide each of the separator structures **45** into multiple disjoined separator structure **45**. A photoresist layer can be applied and lithographically patterned over the alternating stack (**32**, **146**) to form an array of openings that overlie portions of the separator structures **45**. Portions of the alternating stack (**32**, **146**) and the separator structures **45** that are not masked by the patterned photoresist layer can be etched to form the memory openings **49**. In one embodiment, the etch chemistry employed to etch the memory openings **49** can be selected to indiscriminately etch the insulator layers **32**, the semiconductor layers **146**, and the separator structures **45**. Alternatively, combinations of various etch chemistries can be employed to alternately etch the insulator layers **32**, the semiconductor layers **146**, and the separator structures **45** in any sequence. Each separator structure **45** can be divided into a plurality of laterally spaced separator structures **45** by the memory openings **49**.

Each combination of a dielectric spacer **141** and a dielectric fill material portion **142** is divided into multiple dis-

joined structures by forming the memory openings **49** therethrough. Each remaining portion of the combination comprises a separator structure **45**. A plurality of separator structures **45** laterally spaced by the memory openings **49** is provided. Each of the plurality of separator structures **45** and memory openings **49** extend through the alternating stack (**32**, **146**). Each of the memory openings **49** and the separator structures **45** can extend to the top surface of the substrate semiconductor layer **10**. Each separator structure **45** includes a lateral stack, from one side to another, a first dielectric liner **14**A comprising the first dielectric material, a dielectric fill material portion **142** comprising the second dielectric material that is different from the first dielectric material, and a second dielectric liner **14**B comprising the first dielectric material.

Referring to FIGS. **39**A-**39**C, portions of the semiconductor layers **146** are etched selectively with respect to the insulating layers **32** from inside each memory opening **49**. Thus, the memory openings **49** are selectively laterally expanded at each level of the semiconductor layers **146**. A lateral recess region **49**A is formed at each level of the semiconductor layers **146** within each memory opening **49**.

Each lateral recess region **49**A is formed at the level of a respective doped semiconductor layer **146** through a memory opening **49**. Specifically, the lateral recess regions **49**A can be formed, for example, by a selective etch process in which the semiconductor material of the semiconductor layers **146** is etched selective to the insulator material of the insulating layers **32**. In one embodiment, the selectivity of the etch process that etches the semiconductor layers **146** can be greater than 10 with respect to the dielectric materials of the separator structures **45** and the insulating layers **32**. The selective etch process laterally recesses the sidewalls of the semiconductor layers **146** farther away from each memory opening **49** than sidewalls of adjoining insulating layers **32**. The distance of the lateral recess for the lateral recess regions **49**A can be selected such that the lateral recess regions **49**A from neighboring memory openings **49** do not merge after termination of the selective etch process. In one embodiment, each lateral recess region **49**A can have an annular shape.

Referring to FIGS. **40**A-**40**C, a blocking dielectric **152** is formed within each lateral recess region **49**A by conversion of surface portions of the semiconductor layers **146** at each lateral recess region **49**A of the memory openings **49**. In this case, the blocking dielectrics **152** comprise a dielectric material derived from the semiconductor material of the semiconductor layers **146**. In one embodiment, the blocking dielectrics **152** comprise a dielectric oxide, a dielectric oxynitride, and/or a dielectric nitride of the semiconductor material of the semiconductor layers **146**. The conversion of the surface portions of the semiconductor material of the semiconductor layers **146** into the blocking dielectrics **152** can be performed by thermal oxidation, plasma oxidation, thermal nitridation, and/or plasma nitridation. The thickness of each blocking dielectric **152** can be in a range from 6 nm to 24 nm, although lesser and greater thicknesses can also be employed. A horizontal dielectric material portion **252** including an oxide, an oxynitride, and/or a nitride of the semiconductor material of the substrate semiconductor layer **10** can be formed by conversion of physically exposed surface portions of the substrate semiconductor layer **10** into a dielectric material.

Referring to FIGS. **41**A-**41**C, a memory material layer **154**L can be deposited over the alternating stack and in the memory openings **49** by a conformal deposition method. In one embodiment, the memory material layer **154**L includes a semiconductor material, which can be a doped semiconductor material or an intrinsic semiconductor material. The memory material layer **154**L can include polysilicon, amorphous silicon, a silicon-germanium alloy, or a stack thereof. The memory material layer **154**L can completely fill each lateral recess region **49**A.

Referring to FIGS. **42**A-**42**C, portions of the memory material layer **154**L can be isotropically and/or anisotropically etched from outside of the lateral recess regions **49**A within each memory opening **49**. Remaining portions of the deposited semiconductor material of the memory material layer **154**L constitute floating gate regions **54**, which are charge storage elements. Multiple sets at least two charge storage elements are formed within each memory opening **49** such that each set of at least two charge storage elements (i.e., the floating gate regions **54**) is formed within the same memory opening **49** and at the same level, which is a level of the semiconductor layers **146**. Each set of at least two charge storage elements **54** is formed within each lateral recess region **49**A on a respective blocking dielectric **152**. In one embodiment, inner surfaces (surfaces proximal to the geometrical center axis of each memory opening **49**) of the floating gate electrodes **54** can be coplanar with sidewalls of the insulator layers **32** in each memory opening **49**, or can be farther away from the center axis of the respective memory opening **49** than the sidewall of the insulator layers **32** in each memory opening **49**.

Referring to FIGS. **43**A-**43**C, tunneling dielectrics **156** can be formed by conversion of the surface portions of the floating gate regions **54**, which are the multiple sets at least two charge storage elements. The tunneling dielectrics **156** can comprise an oxide, an oxynitride, and/or a nitride of the semiconductor material of the floating gate electrodes **54**. The conversion of the surface portions of the floating gate regions **54** into the tunneling dielectrics **156** can be performed by thermal oxidation, plasma oxidation, thermal nitridation, and/or plasma nitridation. The thickness of each tunneling dielectric **156** can be in a range from 1.5 nm to 10 nm, although lesser and greater thicknesses can also be employed.

A memory stack structure (**152**, **54**, **156**) is formed within each of the memory openings **49**. The memory stack structure (**152**, **54**, **156**) can comprise a pair of charge storage elements **54** located around the semiconductor channel **60** at each level of the electrically conductive layers (**146** or **461**, **462**, **463**).

Referring to FIGS. **44**A-**44**C, the processing steps of FIGS. **8**A-**8**C and **9**A-**9**C can be performed to form a semiconductor channel **60** and a dielectric core **62** in each memory opening **49**. In one embodiment, the plurality of separator structures **45** can comprise a doped silicate glass including dopant atoms, and each semiconductor channel **60** can be formed directly on the plurality of separator structures **45**. If desired the base and enhanced doping semiconductor channel portions **6**A and **6**B may optionally be formed in this embodiment using the methods described in the prior embodiments. Alternatively, the portions **6**A and **6**B are omitted in this embodiment.

Referring to FIGS. **45**A-**45**C, a backside trench can be formed through the alternating stack (**32**, **146**), and the semiconductor layers **146** can be removed selective to insulator layers **32** by a selective etch. In one embodiment, the anisotropic etch that formed the backside trench can stop at the level of the bottommost insulator layer **32** prior to physically exposing a top surface of the semiconductor substrate layer **10** to facilitate removal of the semiconductor layers **146** selective to the insulator layers **32**. Optionally,

backside recesses that are formed in the spaces from which the semiconductor layers **146** are removed can be subsequently filled with metallic material layers (e.g., W, Cu, TiN, WN, etc.) to provide electrically conductive layers (**461**, **462**, **463**), which can include a plurality of prongs (**461**, **462**, **463**). A dielectric spacer **74** and a backside contact structure **76** can be formed as illustrated in FIG. **1** within the backside contact trench.

The fifth exemplary structure can include a memory device, which comprises a stack of alternating layers comprising insulating layers **32** and electrically conductive layers (**146** or **461**, **462**, **463**) and located over a substrate **10**, a memory stack structure (**152**, **54**, **156**) located within a memory opening extending through the stack, and a semiconductor channel **60** having a vertical portion that extends along a direction perpendicular to a top surface of the substrate **10**. Each pair of charge storage elements **54** comprises charge storage elements **54** that are located at a same level as a respective electrically conductive layer (**146** or **461**, **462**, **463**), and are electrically isolated from one another by the separator structures **45**.

Each dielectric fill material portion **142** can be in contact with the vertical portion of a respective semiconductor channel **60**. The first dielectric liner **14**A and the second dielectric liner **14**B can be in contact with the vertical portion of the semiconductor channel **60**. The first dielectric liner **14**A and the second dielectric liner **14**B can have the same thickness. The dielectric fill material portion **142** can have a uniform thickness.

In one embodiment, one of the first dielectric material and the second dielectric material comprises silicon oxide. In one embodiment, one of the first dielectric material and the second dielectric material comprises a dielectric compound including silicon atoms and nitrogen atoms (such as silicon nitride or silicon oxynitride). In one embodiment, the first material comprises silicon nitride or silicon oxynitride, and the second material comprises silicon oxide. In one embodiment, the first material comprises silicon oxide, and the second material comprises silicon nitride or silicon oxynitride. In an alternative embodiment, the dielectric spacers **141**/liners (**14**A, **14**B), such as silicon nitride or silicon oxynitride dielectric spacers or liners may be omitted from the device. In this case, charge is stored in the fill material portion **142** which constitutes the entire separator structure **45**, as will be described below.

In one embodiment, the memory stack structure (**152**, **54**, **156**) comprises vertical stacks of pairs of physically disjoined portions (**152**, **54**, **156**) that are separated by a portion of the separator structure that protrudes inward from an outermost sidewall of the memory opening. In one embodiment, the separator structure **45** extends through the stack of alternating layers (**32**, **146**), contacts sidewalls of the memory stack structure (**152**, **54**, **156**), and laterally separates the control gate electrodes **146** of each pair of charge storage elements **54** located at the same level and within the same memory opening. In one embodiment, vertical portion of the semiconductor channel **60** can have a dopant concentration that is independent of (i.e., does not change as a function of) an azimuthal angle within the vertical portion of the semiconductor channel **60** as measured around a vertical axis passing through a geometrical center GC of the vertical portion of the semiconductor channel. In other words, base and enhanced doped portions **6**A and **6**B described above may be omitted in this embodiment if desired.

Patterned electrically conductive layers (**146** or **461**, **462**, **463**) are provided at each level of the material layers by forming the material layers as layers of a conductive material (such as the semiconductor layers **146** that are doped to provide electrically conductive layers) or by replacement of the material layers with at least one conductive material (which can be a metallic material) to form the electrically conductive layers. For example, the metallic layers may be used with a charge trapping dielectric (e.g., silicon nitride charge storage layer) type device while doped semiconductor layers may be used with a floating gate type device.

The fifth exemplary structure of the present disclosure as illustrated in FIGS. **44**A-**44**C or in FIGS. **45**A-**45**C can comprise a memory device that is a monolithic three-dimensional NAND memory device. In one embodiment, the substrate **8** comprises a silicon substrate, the monolithic three-dimensional NAND memory device comprises an array of monolithic three-dimensional NAND strings over the silicon substrate, and at least one memory cell in the first device level of the three-dimensional array of NAND strings is located over another memory cell in the second device level of the three-dimensional array of NAND strings. The silicon substrate can contain an integrated circuit comprising a driver circuit for the memory device located thereon. Each NAND string comprises a semiconductor channel **60**. An end portion of the semiconductor channel **60** extends substantially perpendicular to a top surface of the silicon substrate. Each NAND string further comprises a plurality of charge storage elements **54**. Each charge storage element **54** is located adjacent to a respective semiconductor channel **60**. Each NAND string comprises a plurality of control gate electrodes (**146** or **461**, **462**, **463**) having a strip shape extending substantially parallel to the top surface of the substrate **8**. The plurality of control gate electrodes (**146** or **461**, **462**, **463**) comprises at least a first control gate electrode located in the first device level and a first control gate electrode located in the second device level. At each level of the control gate electrodes (**146** or **461**, **462**, **463**), a first charge storage element and a second charge storage element are provided within each memory opening. The first charge storage element can be a portion of a first memory material layer (one instance of **54**), and the second charge storage element can be a portion of a second memory material layer (another instance of **54**) that is not in physical contact with the first memory material layer.

The memory device of the fifth exemplary structure can be operated such that the charge trapping material within the separator structures **45** provides electrical isolation between the lateral portions (e.g., left and right portions) of the memory cell in each device level and/or between charge storage elements **54** located at the same level and within a same memory opening **49**. Specifically, charge carriers, such as electrons, are injected into the separator structures **45** during operation of the device, such as during the erase operation of the device. The charge carriers remain in the separator structures **45** during subsequent operation of the device (e.g., during subsequent program, read and erase operations) and provide electrical isolation between the lateral portions (e.g., left and right portions) of the memory cell in each device level and/or between the adjacent charge storage elements **54**. Specifically, the charge carriers in the separator structures **45** can effectively shut off the body (e.g., the ungated portion of the channel) of the device adjacent to the separator structure **45** and thus effectively isolate the left and right sides of the shared channel body (i.e., the left and right sides of the cell adjacent to the left and right side control gate electrodes described above).

The charge carriers, such as electrons, may be injected into the separator structures **45** from the corners and/or edges of the control gate electrodes (**46**, **146**) during the

erase operation. Specifically, the device of the fifth embodiment may be programmed by Fowler-Nordheim tunneling by applying a positive bias to the selected control gate electrode (**46**, **146**) relative to the source or drain of the device to cause electrons to flow from the channel through the tunneling dielectric into the charge storage elements **54** (e.g., floating gates or charge trapping dielectric). The device may be erased using a gate induced drain leakage (GIDL) process. During the GIDL process, a positive voltage is applied to the selected control gate electrode to generate holes in the channel adjacent to the selected cell portion. A negative voltage is then applied to the selected control gate electrode to attract the holes from the channel into the charge storage element **54** of the selected lateral cell portion located adjacent to the selected control gate electrode. The holes recombine with the electrons in the memory structure **54** to erase the selected cell portion. Preferably, an excess amount of holes remains in the charge storage element **54** after the erase operation.

During the application of the negative voltage to the selected control gate electrode during the GIDL erase operation, the electric field is higher at the corners of the control gate electrodes located adjacent to the separator structures **45** than in the bulk of the control gate electrodes. The high electric field erase saturation condition under negative bias causes the electrons to be emitted from the corners of the control gate electrodes into the adjacent separator structures **45** during the GIDL erase step at the same time as the holes are drawn into the charge storage element **54** from the channel.

The charge carriers, such as electrons, may be permanently stored in any portion of the separator structures **45**. For example, for separator structures **45** containing only a silicon oxide fill, the electrons may be stored in the silicon oxide fill. For separator structures that contain a charge trapping dielectric, such as silicon nitride or oxynitride liners **14**A, **14**B or core **142**, the charge may be stored in these charge trapping dielectric liners or core. In one embodiment, the first dielectric liners **14**A and the second dielectric liners **14**B can include a charge trapping material (such as silicon nitride or silicon oxynitride), and the electrons can be trapped within the first dielectric liners **14**A and the second dielectric liners **14**B. In another embodiment, the dielectric fill material portions **142** can include a charge trapping material (such as silicon nitride or oxynitride), and the electrons can be trapped within the dielectric fill material portions **142**.

The negative voltage applied to the selected control gate electrodes (e.g., selected electrically conductive layers (**146** or **461**, **462**, **463**)) can be in a range from negative 2 V to negative 20 V, such as negative 3V to negative 7V, although lesser and greater magnitudes can also be employed. If desired, the negative voltage may be pulsed during the erase operation. For example, the negative voltage may be pulsed with a step wise increase (i.e., each subsequent pulse or set of pulses may be more negative than the prior pulse or set of pulses). During the erase operation, the unselected control gates and/or other nodes of the device may be grounded.

Optionally, the set of the semiconductor layers **146** of the third, fourth and fifth embodiments may be replaced with a different set of electrically conductive layers having a higher conductivity (such as electrically conductive layers including metallic materials such as TiN, TaN, WN, W, Cu, Al, Co, Ru, or combinations thereof). In this case, a backside contact trench can be employed to remove the doped or undoped semiconductor material of the semiconductor layers **146** selective to the insulator layers **32** and to form backside recesses. The backside recesses can be filled with at least one metallic material to form electrically conductive layers having a greater conductivity than the semiconductor layers **146** of the third or fourth embodiment. In case metallic materials **46** are used, then the blocking dielectric is formed by dielectric layer deposition rather than by oxidation of semiconductor layers **146**. Furthermore, rather than using discreet floating gates as the charge storage regions/memory structures, a continuous charge trapping dielectric layer (e.g., silicon nitride layer) may be used as the charge storage regions/memory structures in each device level, as described with respect to the second embodiment above. In this case, the tunneling dielectric may be formed by deposition of a tunneling dielectric layer(s) rather than oxidation of silicon floating gates. Furthermore, the recesses **49**A may be omitted in this case.

Although the foregoing refers to particular embodiments, it will be understood that the disclosure is not so limited. It will occur to those of ordinary skill in the art that various modifications may be made to the disclosed embodiments and that such modifications are intended to be within the scope of the disclosure. Where an embodiment employing a particular structure and/or configuration is illustrated in the present disclosure, it is understood that the present disclosure may be practiced with any other compatible structures and/or configurations that are functionally equivalent provided that such substitutions are not explicitly forbidden or otherwise known to be impossible to one of ordinary skill in the art. All of the publications, patent applications and patents cited herein are incorporated herein by reference in their entirety.

What is claimed is:

1. A memory device, comprising:

a substrate having a major surface;

a stack of alternating layers comprising insulating layers and control gate electrodes located over the substrate;

memory openings continuously extending from a topmost layer of the stack of alternating layers down to the major surface of the substrate, wherein each of the memory openings includes a respective memory stack structure extending through the stack of alternating layers, wherein sidewalls of the stack of alternating layers that physically contact the memory stack structures consist of concave sidewalls, wherein each of the memory stack structures comprises a plurality of memory cells arranged in a string extending in a first direction substantially perpendicular to the major surface of the substrate in a plurality of device levels, wherein each of the plurality of memory cells is positioned in a respective one of the plurality of device levels above the substrate;

at least one first select gate electrode located between the major surface of the substrate and the plurality of memory cells;

at least one second select gate electrode located above the plurality of memory cells;

a semiconductor channel having a portion that extends vertically along a direction perpendicular to the major surface;

a first charge storage element located on a first side of the semiconductor channel; and

a second charge storage element located on a second side of the semiconductor channel and located at a same level as the first charge storage element, wherein the second charge storage element is electrically isolated from the first charge storage element, and located at a same level as the first charge storage element.

2. The memory device of claim 1, wherein each memory cell of the plurality of memory cells comprises:

a unitary portion of the semiconductor channel;

the first charge storage element;

the second charge storage element;

at least a portion of a first control gate electrode located adjacent to the first charge storage element; and

at least a portion of a second control gate electrode located adjacent to the second charge storage element and electrically isolated from the first control gate electrode and the first charge storage element.

3. The memory device of claim 2, wherein each memory cell of the plurality of memory cells further comprise:

a blocking dielectric contacting outer sidewalls of the first and second charge storage elements; and

a tunneling dielectric contacting inner sidewalls of the first and second charge storage elements and an outer sidewall of the semiconductor channel, such that the tunneling dielectric is located between the semiconductor channel and the first and second charge storage elements.

4. The memory device of claim 1, wherein:

multiple sets of at least two charge storage elements located are around the semiconductor channel at each level of a respective control gate electrodes; and

the memory device further comprises separator insulator structures extending through the stack, contacting portions of an outer sidewall of the memory stack structure, and laterally separating the control gate electrodes of the plurality of charge storage elements, wherein the memory stack structure is located in a memory opening that includes a lateral recess region at each level of the control gate electrodes, wherein each set of at least two charge storage elements is located within a respective lateral recess region.

5. The memory device of claim 4, wherein each set of at least two charge storage elements comprises at least two floating gates that are physically disjoined from one another.

6. The memory device of claim 4, further comprising:

a single contiguous tunneling dielectric that laterally surrounds the semiconductor channel; and

a single contiguous blocking dielectric that contacts outer sidewalls of the respective single contiguous tunneling dielectric.

7. The memory device of claim 4, wherein:

the memory device is a monolithic three-dimensional NAND memory device;

the substrate comprises a silicon substrate;

the monolithic three-dimensional NAND memory device comprises an array of monolithic three-dimensional NAND strings over the silicon substrate;

at least one memory cell in a first device level of the three-dimensional array of NAND strings is located over another memory cell in a second device level of the three-dimensional array of NAND strings;

the silicon substrate contains an integrated circuit comprising a driver circuit for the memory device located thereon; and

each NAND string comprises:

the semiconductor channel in a respective memory stack structure, wherein at least one end portion of the semiconductor channel extends substantially perpendicular to a top surface of the silicon substrate;

a plurality of charge storage elements, each charge storage element located adjacent to a respective semiconductor channel; and

the control gate electrodes having a strip shape extending substantially parallel to the top surface of the substrate, the control gate electrodes comprise at least a first control gate electrode located in the first device level and a second control gate electrode located in the second device level.

8. The memory device of claim 4, wherein:

the separator insulator structures comprise a subset of separator insulator structures that include sidewalls located entirely within a parallel pair of vertical surfaces extending along a first horizontal direction and spaced apart by a uniform distance along a second horizontal direction that is perpendicular to the first horizontal direction; and

each separator insulator structure within the subset of separator insulator structures is laterally spaced by a subset of the memory stack structures arranged along the first horizontal direction.

9. The memory device of claim 8, wherein the separator insulator structures comprise a subset of separator insulator structures that include sidewalls located entirely within a parallel pair of vertical surfaces extending along a first horizontal direction and spaced apart by a uniform distance along a second horizontal direction that is perpendicular to the first horizontal direction.

10. The memory device of claim 8, wherein each separator insulator structure within the subset of separator insulator structures is laterally spaced by a subset of the memory stack structures arranged along the first horizontal direction.

11. The memory device of claim 1, wherein the first charge storage element and the second charge storage element are two spatially spaced-apart portions within a same memory material layer.

12. The memory device of claim 1, wherein the first charge storage element is a portion of a first memory material layer, and the second charge storage element is a portion of a second memory material layer that is not in physical contact with the first memory material layer.

13. The memory device of claim 1, wherein the major surface of the substrate is a topmost horizontal surface of a substrate semiconductor layer including a semiconductor material.

14. The memory device of claim 1, wherein the portion of the semiconductor channel that extends vertically has an azimuthally modulated dopant profile in which a dopant concentration changes as a function of an azimuthal angle around a geometrical center of the portion of the semiconductor channel that extends vertically.

15. The memory device of claim 14, further comprising:

separator insulator structures extending through the stack, contacting portions of an outer sidewall of the memory stack structure, and laterally separating the control gate electrodes of the plurality of charge storage elements;

base doping semiconductor channel portions which face the respective separator insulator structures; and

enhanced doping semiconductor channel portions which have a greater dopant concentration than the base doping semiconductor channel portions, and which face the respective control gate electrodes.

16. The memory device of claim 1, further comprising separator insulator structures extending through the stack, contacting portions of an outer sidewall of the memory stack structure, and laterally separating the control gate electrodes of the plurality of charge storage elements, wherein:

the memory stack structure comprises vertical stacks of pairs of physically disjoined portions that are separated

by a portion of the separator insulator structure that protrudes inward from an outermost sidewall of the memory opening; and

the portion of the semiconductor channel that extends vertically in the memory opening is continuous in an azimuthal direction around a geometrical center of the portion of the semiconductor channel that extends vertically.

17. A memory device, comprising:

an alternating stack of insulating layers and patterned electrically conductive layers located over a major surface of a substrate, the major surface being a topmost horizontal surface of a substrate semiconductor layer including a semiconductor material;

memory openings continuously extending from a topmost layer of the stack of alternating layers down to the major surface of the substrate;

a first pair of memory stack structures and a second pair of memory stack structures that are located in the memory openings, wherein each memory stack structure comprises a plurality of memory cells arranged in a string extending in a first direction substantially perpendicular to the major surface of the substrate in a plurality of device levels, each of the plurality of memory cells is positioned in a respective one of the plurality of device levels above the substrate, and wherein a semiconductor channel extends through all levels within the plurality of device levels in each memory stack structure;

a first separator insulator structure vertically extending through the stack and contacting the first pair of memory stack structures; and

a second separator insulator structure vertically extending through the stack and contacting the second pair of memory stack structures,

wherein first control gate electrodes within the patterned electrically conductive layers contact the first and the second separator insulator structures, a first side of each memory stack structure within the first pair of memory stack structures, and a first side of each memory stack structure within the second pair of memory stack structures.

18. The memory device of claim **17**, further comprising:

second control gate electrodes within the patterned electrically conductive layers contact a second side of the first separator insulator structure and a second side of each of the first pair of memory stack structures; and

third control gate electrodes within the patterned electrically conductive layers contact a second side of the second separator insulator structure and a second side of each of the second pair of memory stack structures.

19. The memory device of claim **18**, wherein:

each memory stack structure comprises multiple sets of at least two charge storage elements located around the semiconductor channel at each level of the electrically conductive layers; and

each set of at least two charge storage elements comprises charge storage elements that are located at a same level as a respective patterned electrically conductive layer, and are electrically isolated from one another, from the semiconductor channel by at least one respective tunneling dielectric, and from respective control gate electrodes thereof by at least one respective blocking dielectric.

20. The memory device of claim **19**, wherein:

each memory stack structure is located in the memory opening that includes a lateral recess region at each level of the patterned electrically conductive layers, wherein each set of at least two charge storage elements is located within a respective lateral recess region; and

each set of at least two charge storage elements comprises at least two floating gates that are physically disjoined from one another.

21. The memory device of claim **19**, wherein each set of at least two charge storage elements comprises two regions within a contiguous memory material layer that are adjacent to the respective control gate electrodes and located at a same level.

22. The memory device of claim **17**, wherein:

the memory device is a monolithic three-dimensional NAND memory device;

the substrate comprises a silicon substrate;

the monolithic three-dimensional NAND memory device comprises an array of monolithic three-dimensional NAND strings over the silicon substrate;

at least one memory cell in a first device level of the three-dimensional array of NAND strings is located over another memory cell in a second device level of the three-dimensional array of NAND strings;

the silicon substrate contains an integrated circuit comprising a driver circuit for the memory device located thereon; and

each NAND string comprises:

a semiconductor channel in a respective memory stack structure, wherein at least one end portion of the semiconductor channel extends substantially perpendicular to a top surface of the silicon substrate;

a plurality of charge storage elements, each charge storage element located adjacent to a respective semiconductor channel; and

a plurality of control gate electrodes having a strip shape extending substantially parallel to the top surface of the substrate.

23. The memory device of claim **17**, wherein a portion of the semiconductor channel that extends vertically has an azimuthally modulated dopant profile in which a dopant concentration changes as a function of an azimuthal angle around a geometrical center of the portion of the semiconductor channel that extends vertically.

24. The memory device of claim **23**, further comprising:

base doping semiconductor channel portions which face the first and the second separator insulator structures; and

enhanced doping semiconductor channel portions which have a greater dopant concentration than the base doping semiconductor channel portions, and which face the respective first control gate electrodes.

25. The memory device of claim **17**, wherein:

the memory stack structure comprises vertical stacks of pairs of physically disjoined portions that are separated by portions of the first and the second separator insulator structures that protrude inward from an outermost sidewall of the memory opening; and

a portion of the semiconductor channel that extends vertically in the memory opening is continuous in an azimuthal direction around a geometrical center of the portion of the semiconductor channel that extends vertically.

26. A memory device, comprising:

a substrate having a major surface that is a topmost horizontal surface of a substrate semiconductor layer including a semiconductor material;

a stack of alternating layers comprising insulating layers and control gate electrodes located over the substrate;

memory openings continuously extending from a topmost layer of the stack of alternating layers down to the major surface of the substrate, wherein each of the memory openings includes a respective memory stack structure extending through the stack, wherein each of the memory stack structures comprises a dielectric core, a semiconductor channel that vertically extends through the stack of alternating layers and laterally surrounding the dielectric core and laterally spaces the dielectric core from each sidewall of the memory opening, and multiple sets of at least two charge storage elements located around the semiconductor channel at each level of the electrically conductive layers, and each set of at least two charge storage elements is located at a level of a respective control gate electrode, and are electrically isolated from one another, and wherein the dielectric core is entirely within, and laterally offset inward from, an entirety of sidewalls of the memory opening;

at least one first select gate electrode located between the major surface of the substrate and the plurality of memory cells;

at least one second select gate electrode located above the plurality of memory cells;

a semiconductor channel having a portion that extends vertically along a direction perpendicular to the major surface;

a first charge storage element located on a first side of the semiconductor channel; and

a second charge storage element located on a second side of the semiconductor channel and located at a same level as the first charge storage element, wherein the second charge storage element is electrically isolated from the first charge storage element, and located at a same level as the first charge storage element.

27. The memory device of claim **26**, wherein the portion of the semiconductor channel that extends vertically has an azimuthally modulated dopant profile in which a dopant concentration changes as a function of an azimuthal angle around a geometrical center of the portion of the semiconductor channel that extends vertically.

28. The memory device of claim **27**, further comprising:

separator insulator structures extending through the stack, contacting portions of an outer sidewall of the memory stack structure, and laterally separating the control gate electrodes of the plurality of charge storage elements;

base doping semiconductor channel portions which face the respective separator insulator structures; and

enhanced doping semiconductor channel portions which have a greater dopant concentration than the base doping semiconductor channel portions, and which face the respective control gate electrodes.

29. The memory device of claim **26**, further comprising separator insulator structures extending through the stack, contacting portions of an outer sidewall of the memory stack structure, and laterally separating the control gate electrodes of the plurality of charge storage elements, wherein:

the memory stack structure comprises vertical stacks of pairs of physically disjoined portions that are separated by a portion of the separator insulator structure that protrudes inward from an outermost sidewall of the memory opening; and

the portion of the semiconductor channel that extends vertically in the memory opening is continuous in an azimuthal direction around a geometrical center of the portion of the semiconductor channel that extends vertically.

* * * * *