US 20120139815A1

(19) United States

(12) Patent Application Publication

AONO et al.

(10) Pub. No.: US 2012/0139815 A1

(43) Pub. Date: Jun. 7, 2012

(54) **PERSONAL DIGITAL ASSISTANT, AND DISPLAY CONTROL METHOD AND DISPLAY CONTROL PROGRAM THEREOF**

(75) Inventors: **Tatsuhito AONO**, Tokyo (JP); **Tetsuya KOBAYASHI**, Tokyo (JP); **Yuji FUKAYA**, Tokyo (JP); **Shin TAKANASHI**, Kanagawa (JP)

(73) Assignee: **SONY ERICSSON MOBILE COMMUNICATIONS JAPAN, INC.**, Minato-ku (JP)

(21) Appl. No.: **13/180,795**

(22) Filed: **Jul. 12, 2011**

Related U.S. Application Data

(60) Provisional application No. 61/418,731, filed on Dec. 1, 2010.

Publication Classification

(51) **Int. Cl.**
G09G 5/00 (2006.01)

(52) **U.S. Cl.** **345/1.3**

(57) **ABSTRACT**

An information processing device including a plurality of rectangular-shaped casings each including a first principal surface, and a second principal surface opposing the first principal surface and including a display panel having a predetermined aspect ratio. The information processing device including a connecting portion connecting each of the plurality of rectangular-shaped casings in a closed state in which each of the plurality of rectangular-shaped casings are mutually overlaid and a display panel of at least one of the plurality of rectangular-shaped casings is externally exposed, and in an open state in which wall portions of mutually adjacent rectangular-shaped casings abut and the display panels of each of the plurality of rectangular-shaped casings face a similar direction. The information processing device further includes a terminal state detecting unit that detects the closed state and the opened state, and a display control unit that controls display of each of the display panels.

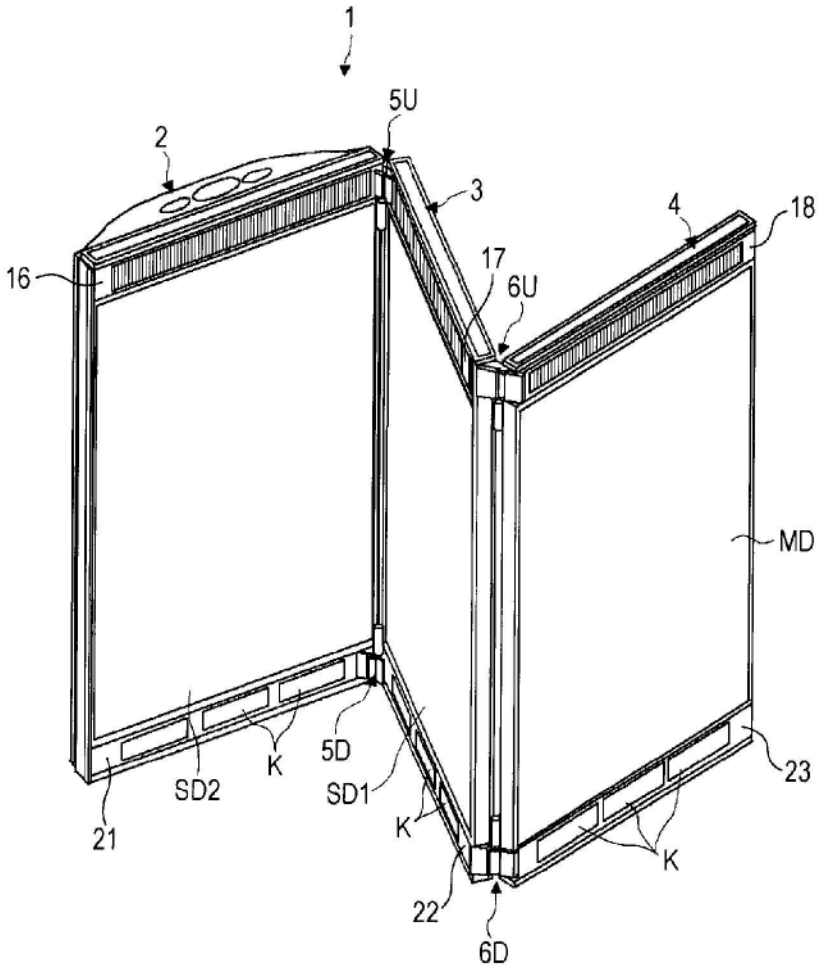

FIG. 1

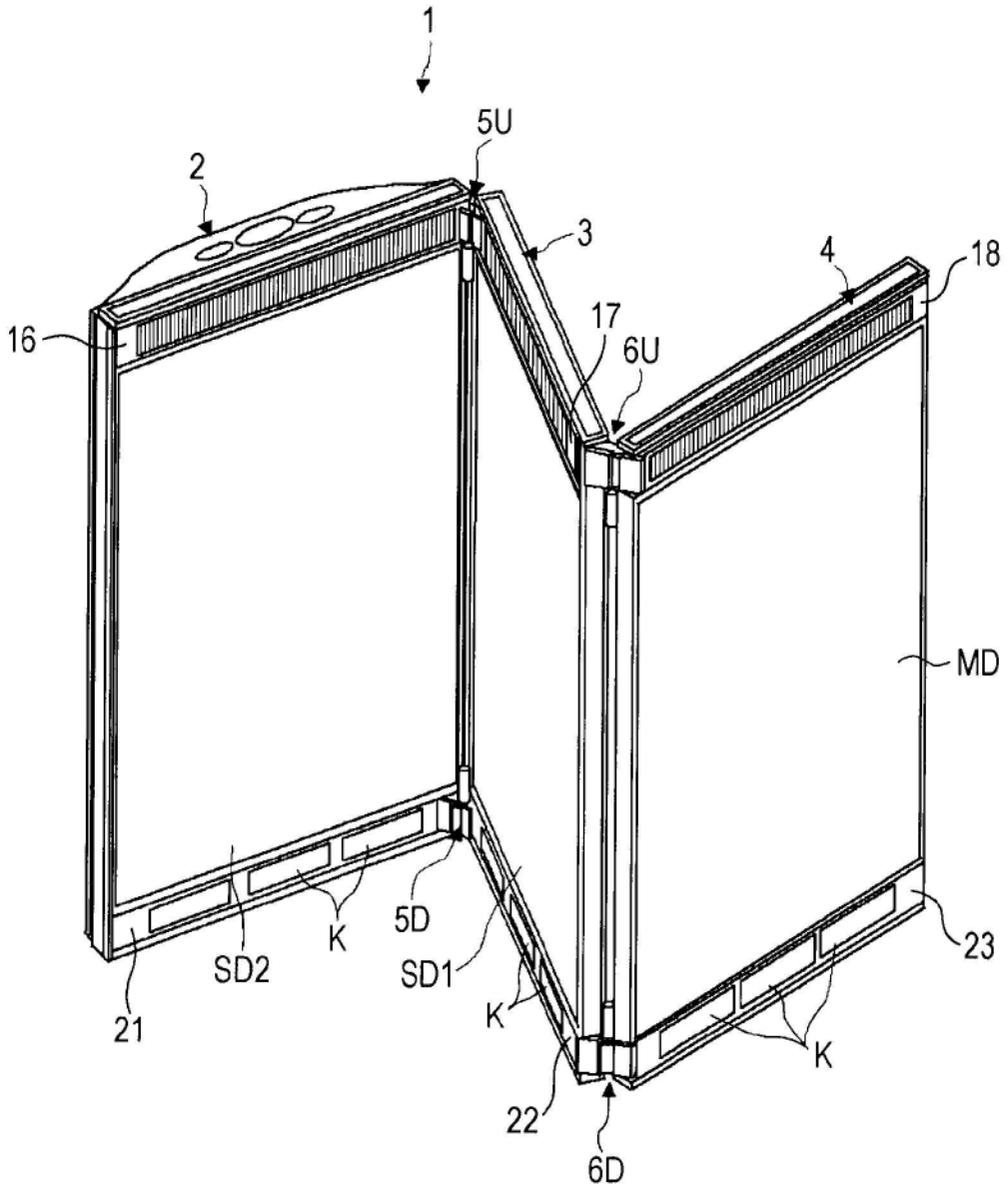

FIG. 2

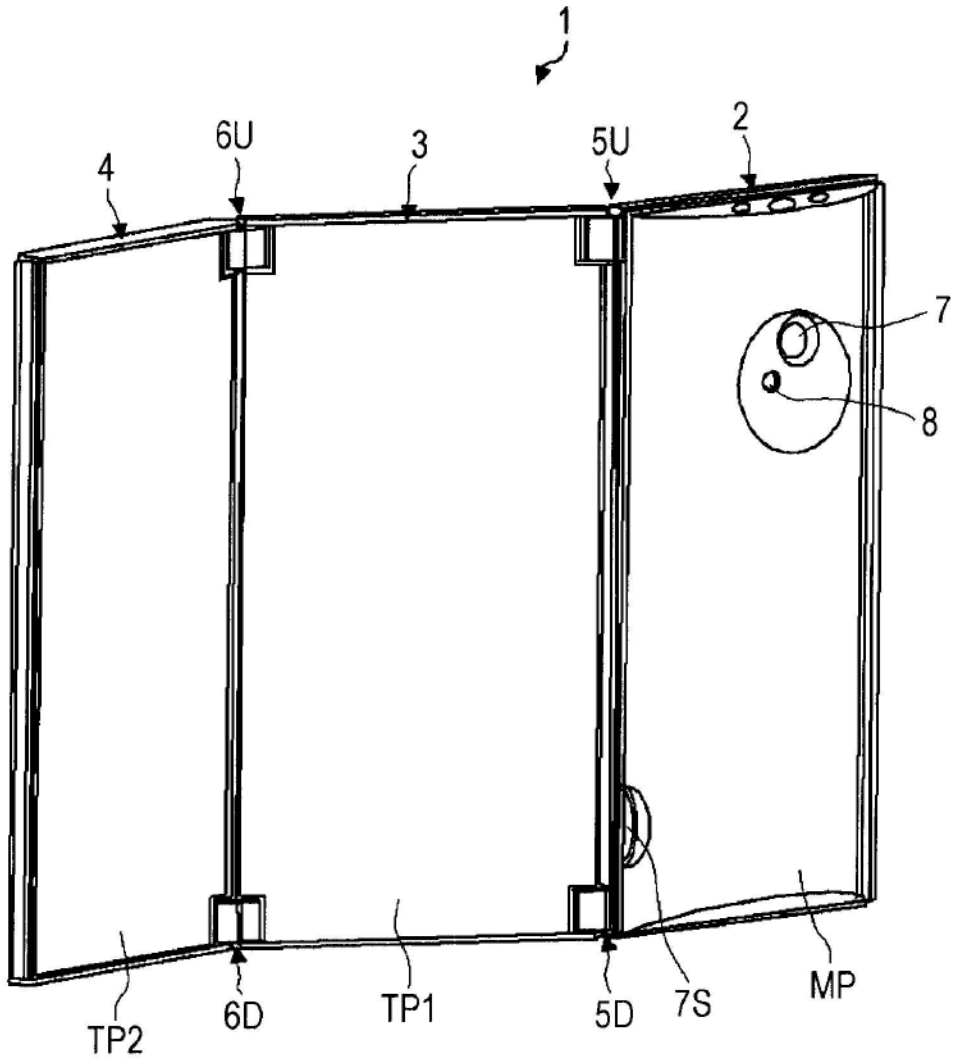

FIG. 3

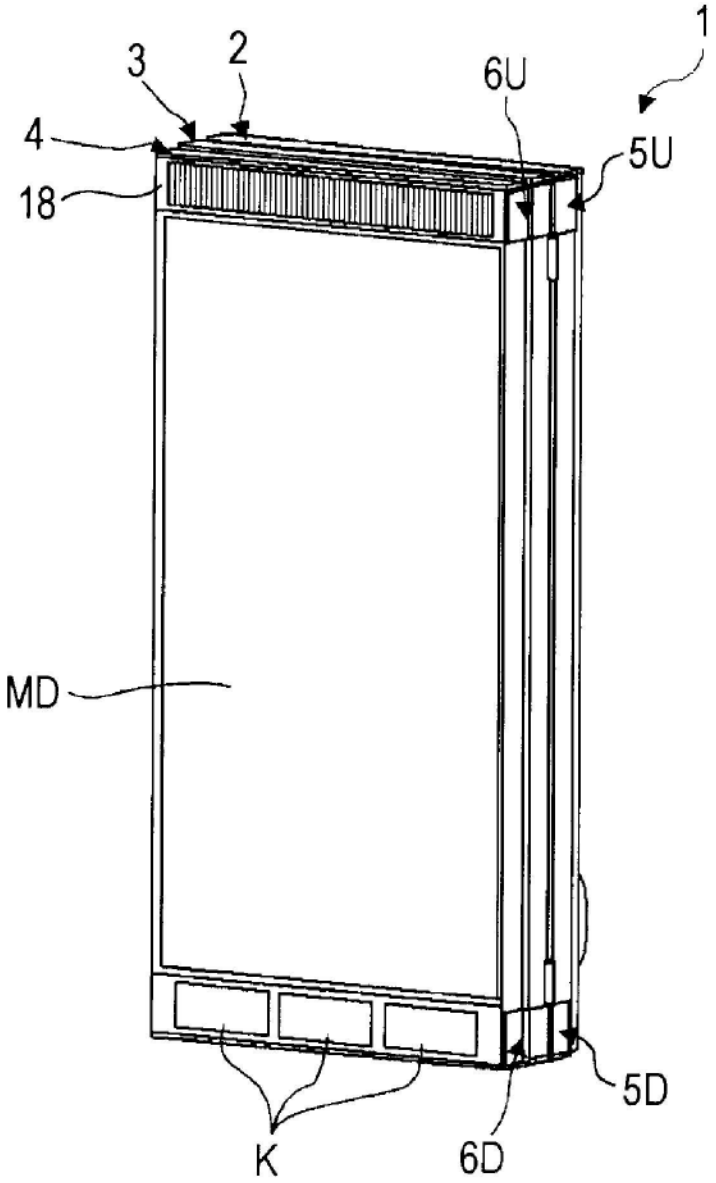

FIG. 4

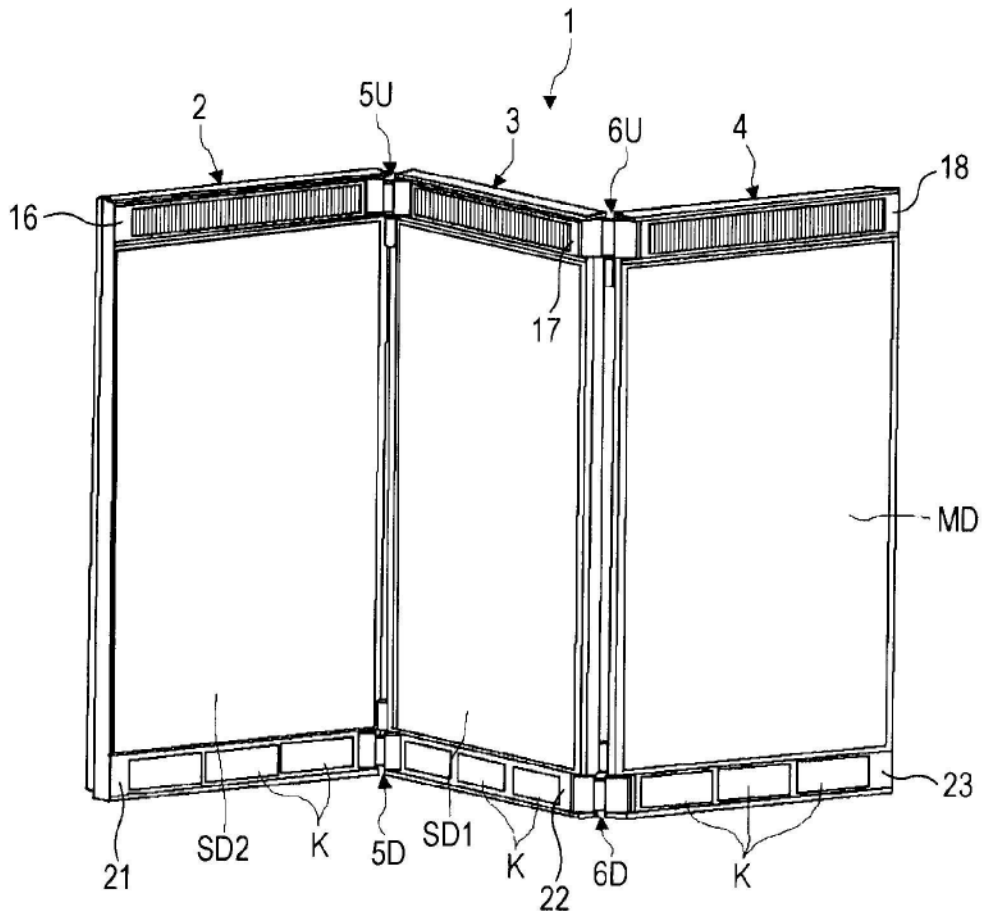

FIG. 5

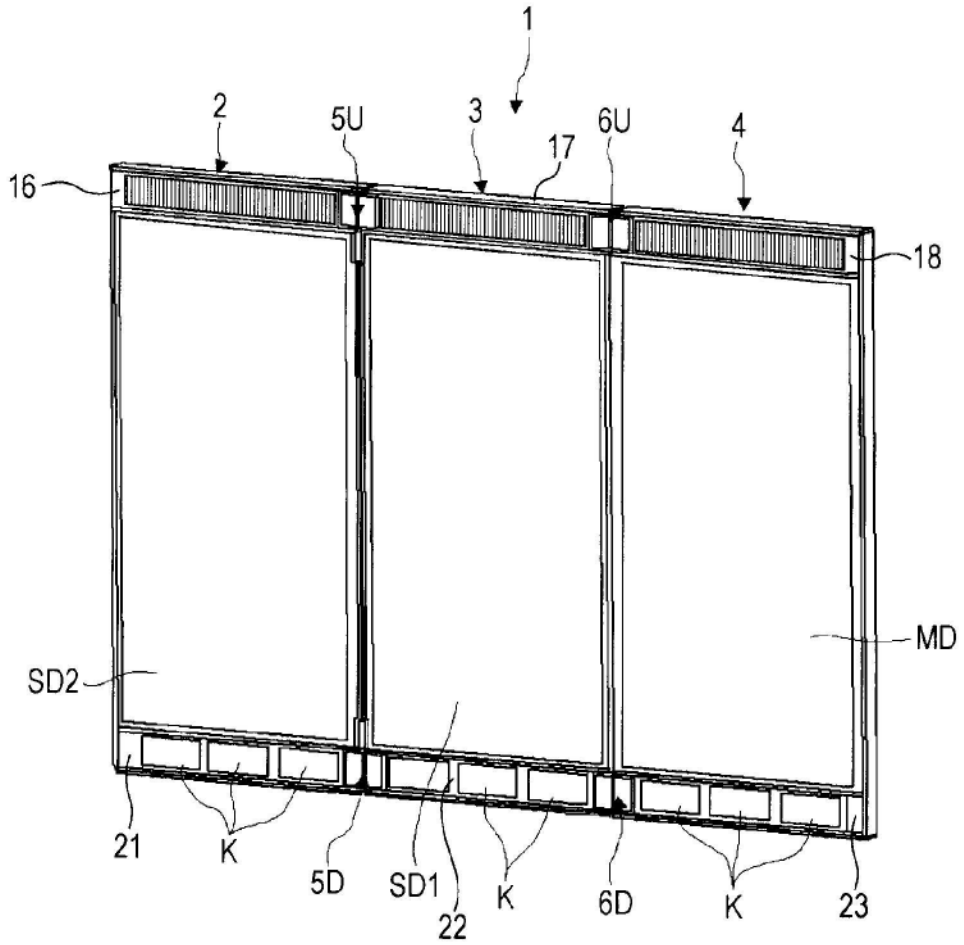

FIG. 6

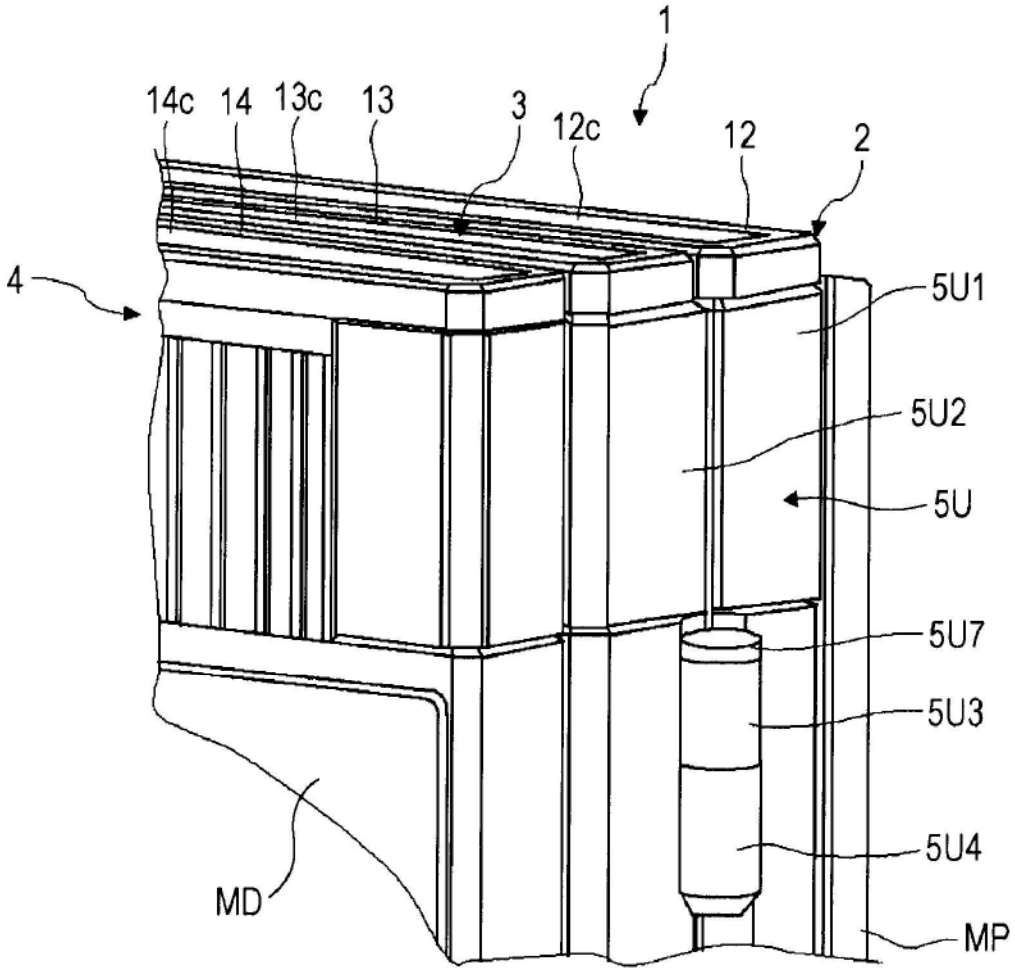

FIG. 7

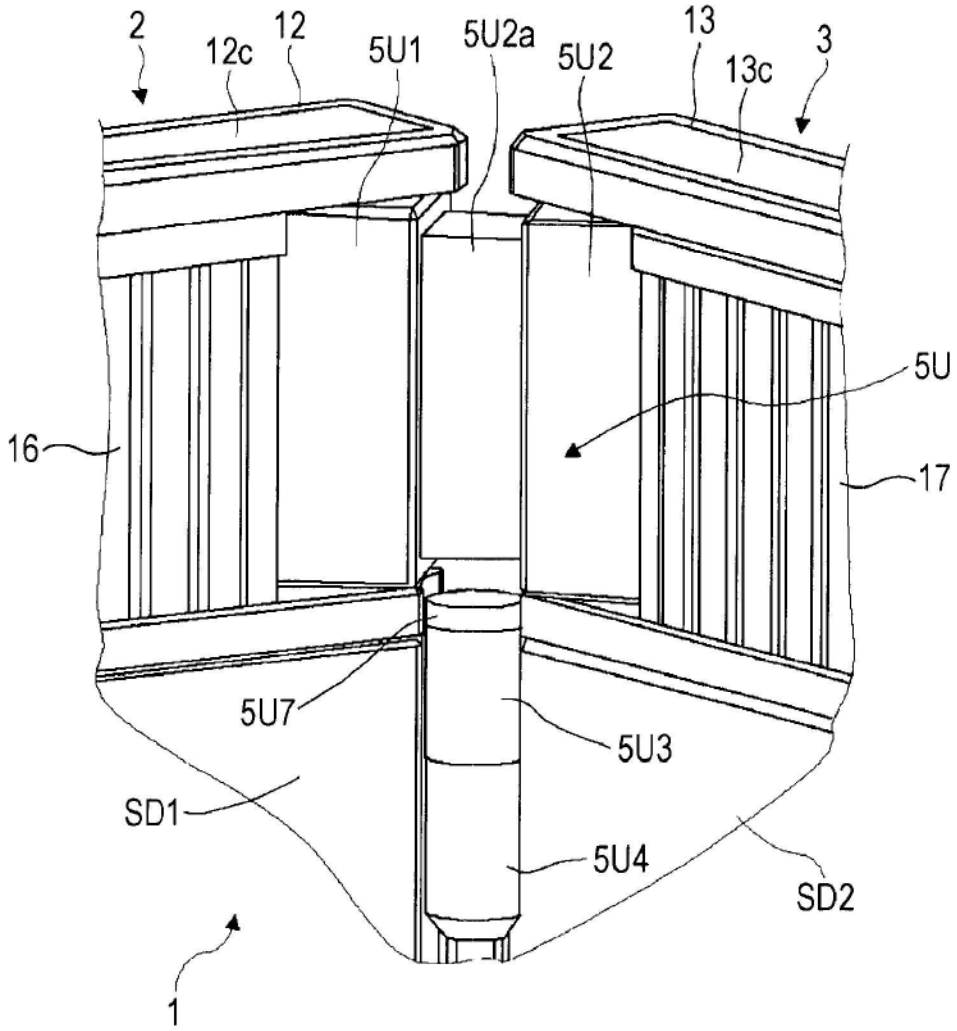

FIG. 8

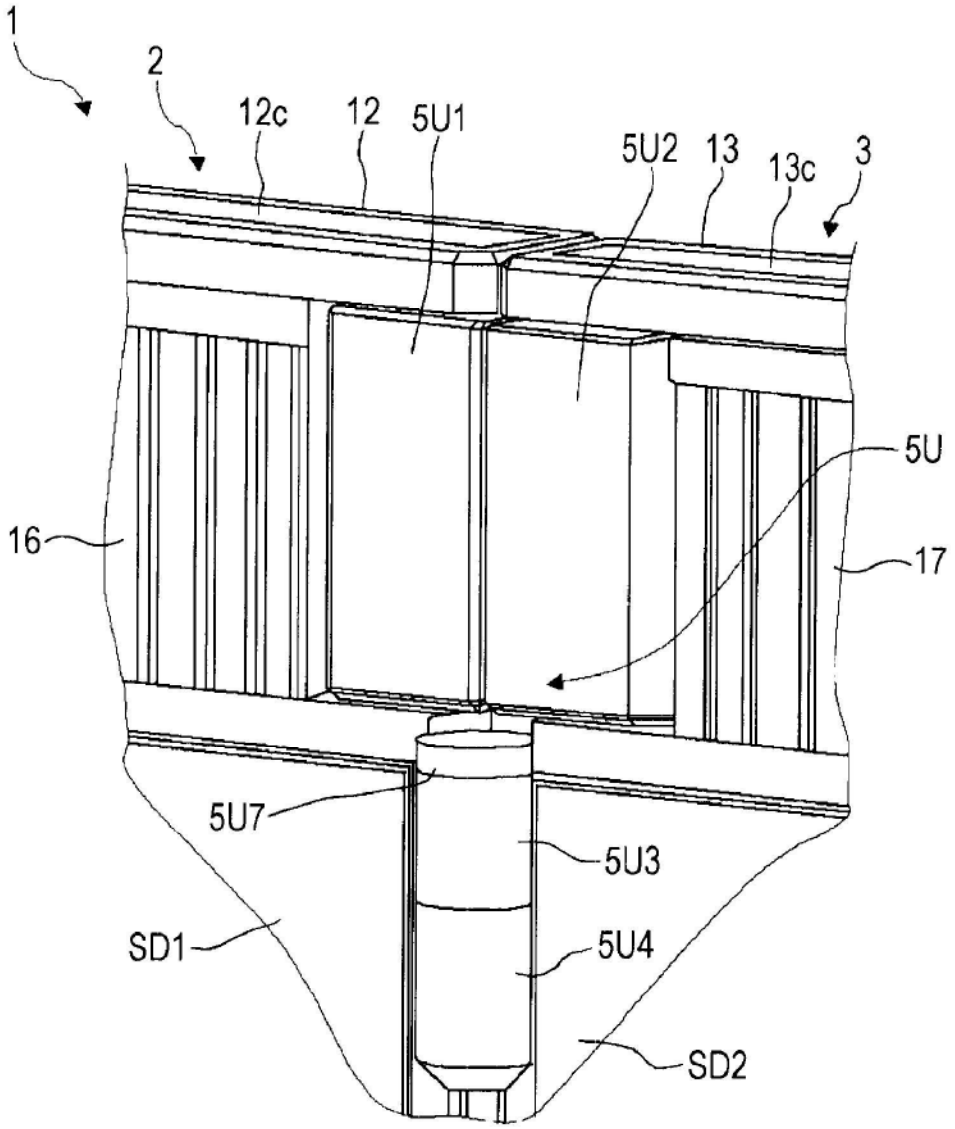

FIG. 9

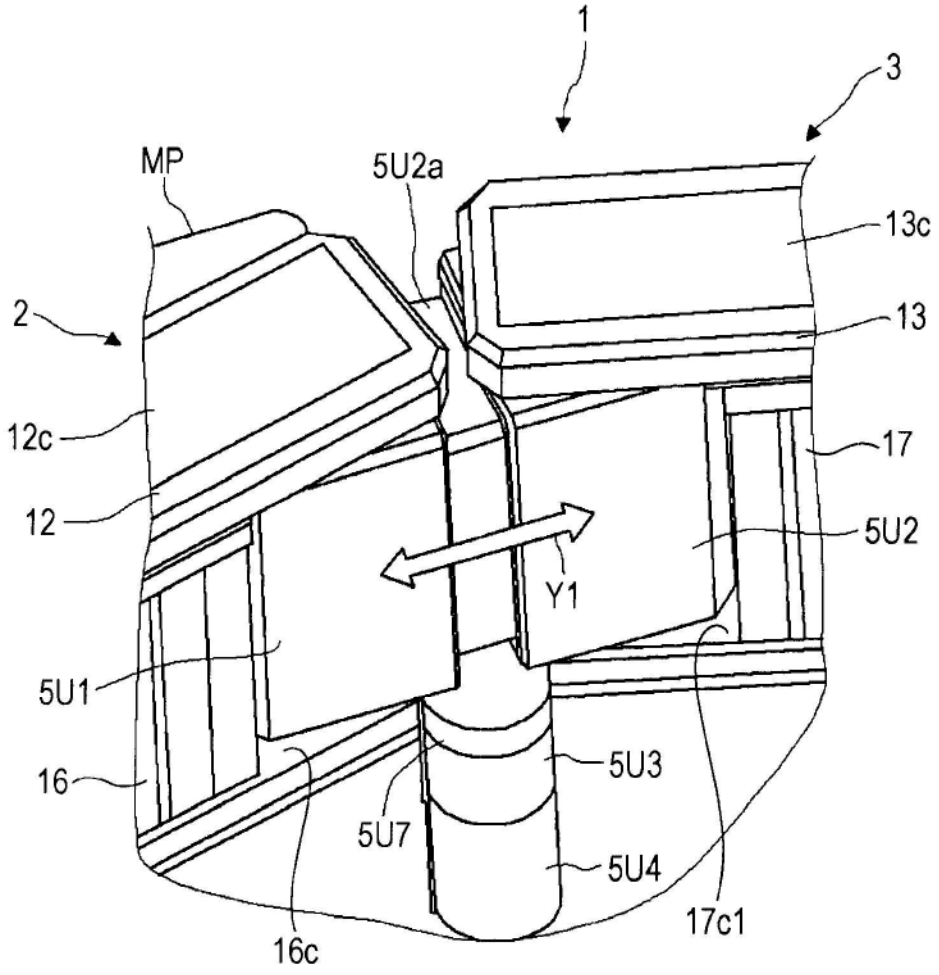

FIG. 10

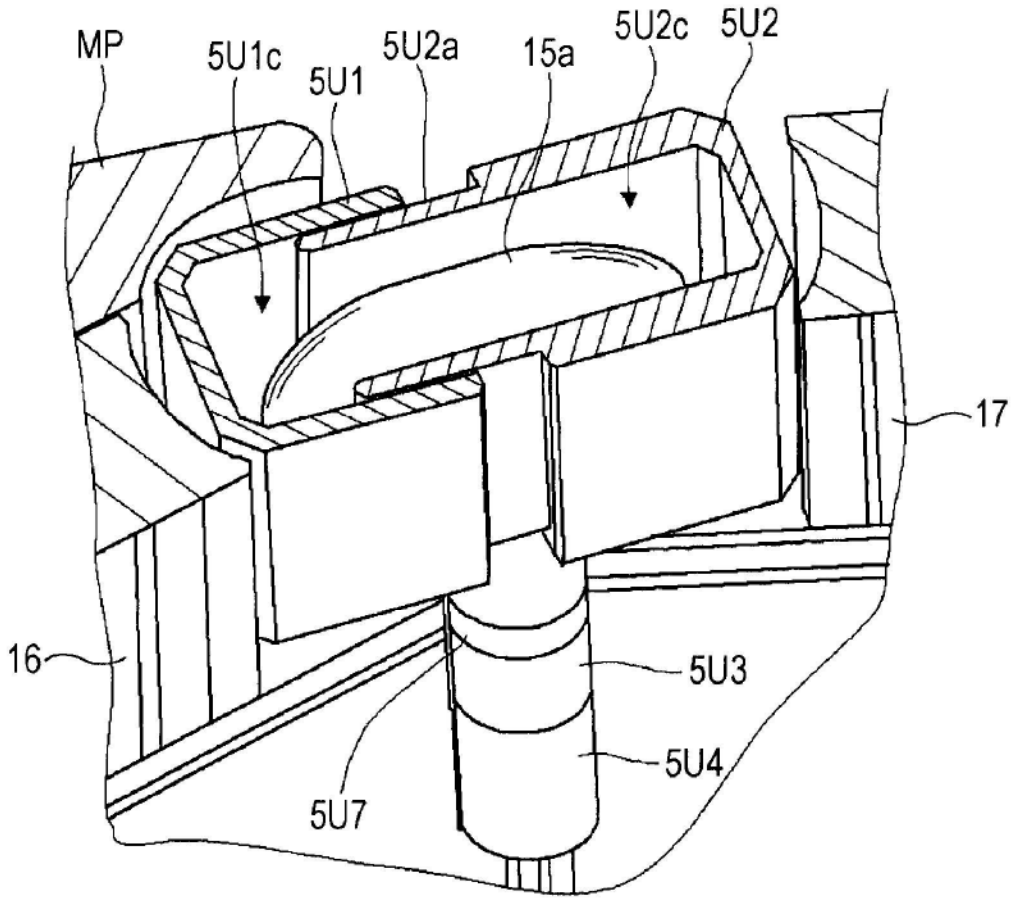

FIG. 11

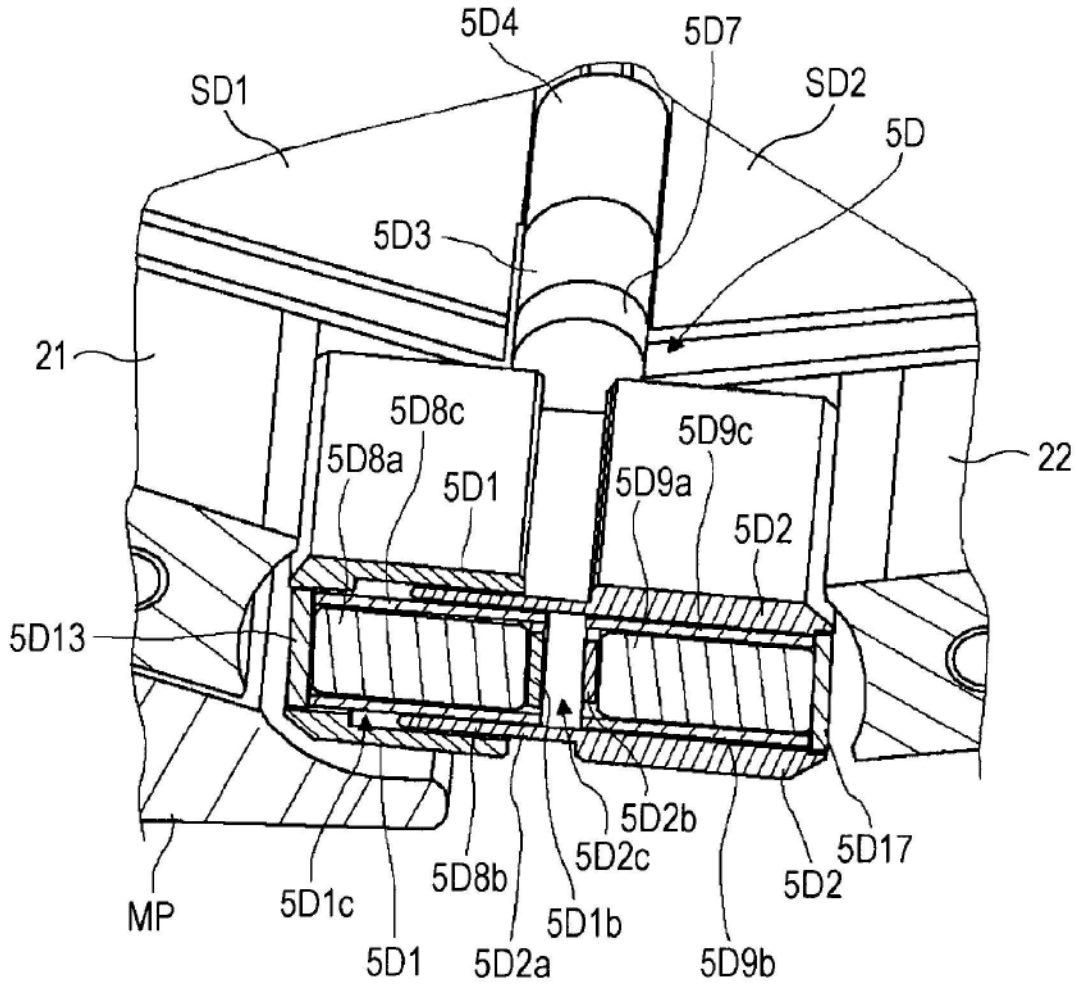
5D4
5D7
SD1
SD2
5D
5D3
21
22
5D8c
5D9c
5D8a
5D1
5D9a
5D2
5D13
5D2b
5D2c
5D17
5D8b
5D2
MP
5D1c
5D1b
5D1
5D2a
5D9b

FIG. 12

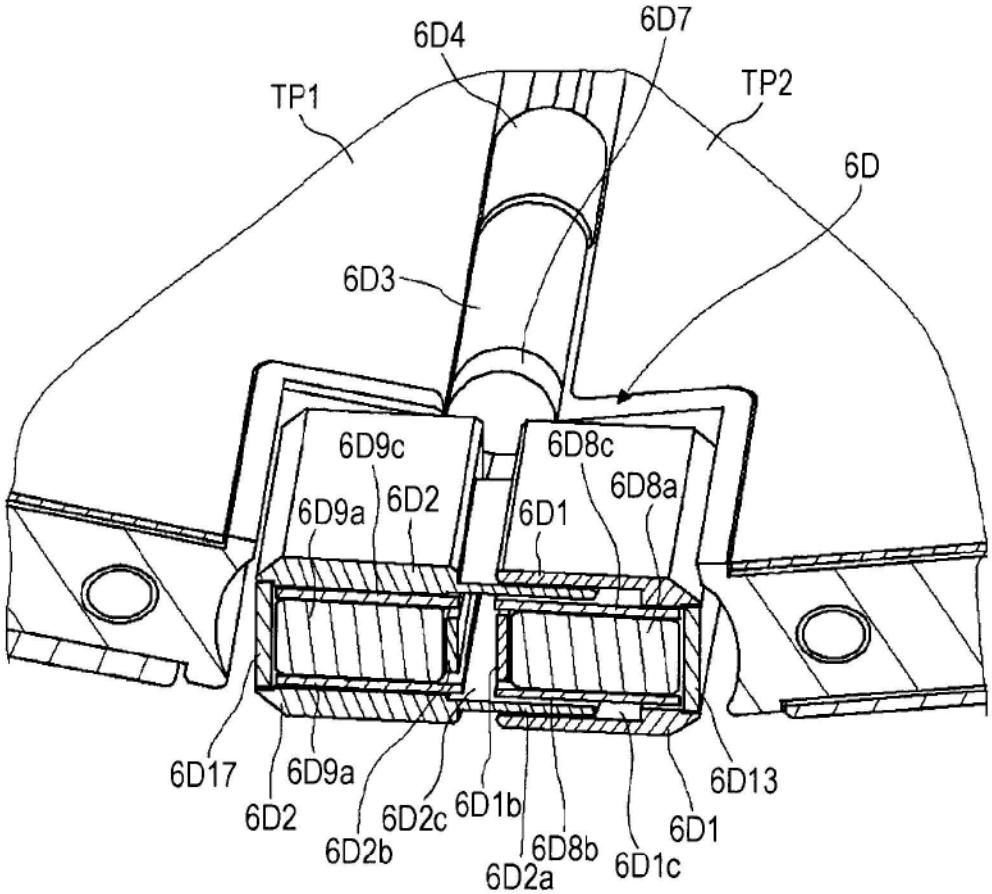
6D4
6D7
TP1
TP2
6D
6D3
6D9c
6D8c
6D9a
6D2
6D1
6D8a
6D17
6D9a
6D2
6D2c
6D1b
6D13
6D2b
6D8b
6D1
6D2a
6D1c

FIG. 13

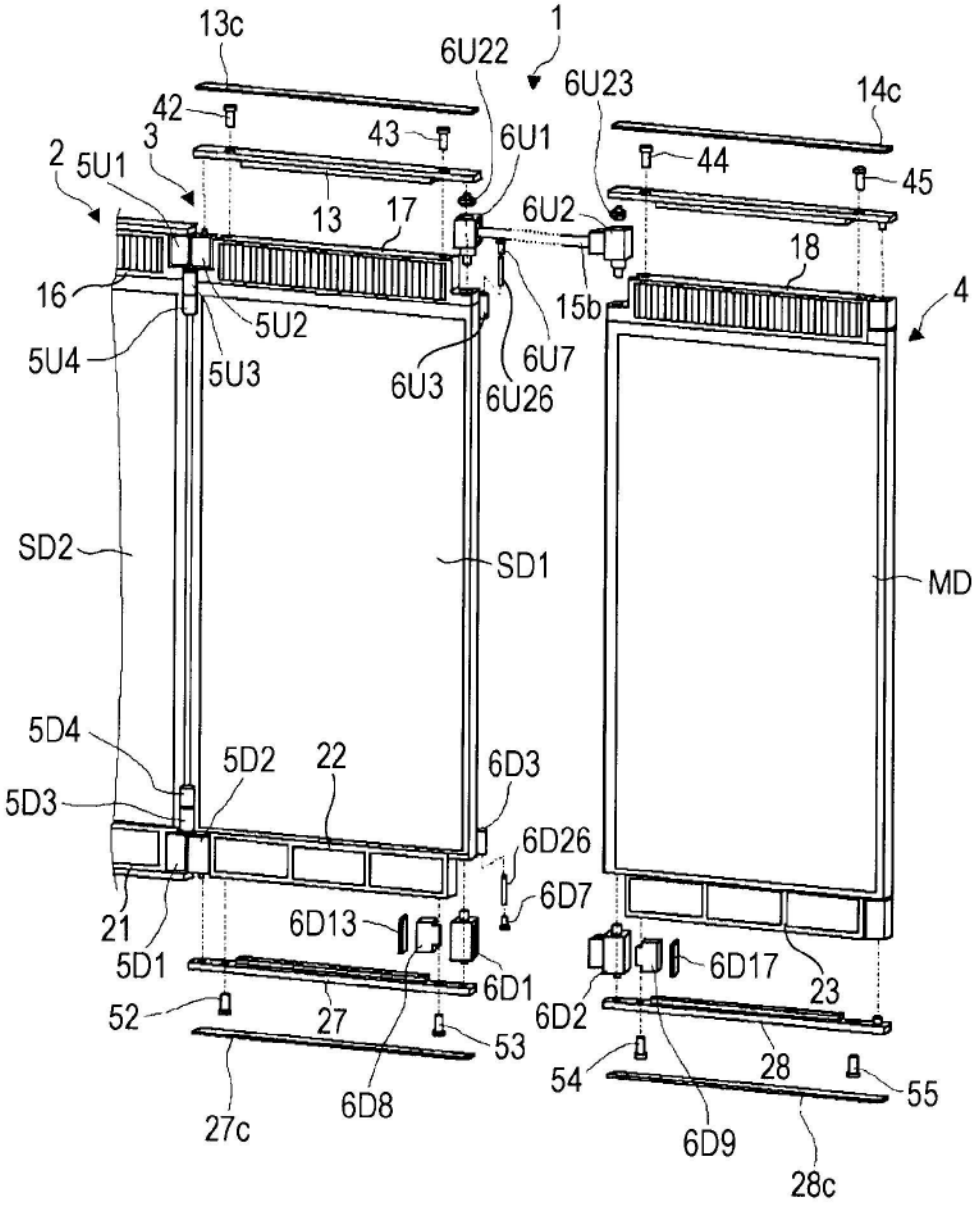
13c
1
6U22
6U23
14c
42
43
6U1
44
45
2
5U1
3
13
17
6U2
18
16
15b
4
5U2
5U4
5U3
6U3
6U7
6U26
SD2
SD1
MD
5D4
5D2
22
6D3
5D3
6D26
6D7
21
6D13
6D17
5D1
6D1
23
52
27
6D2
53
28
54
55
27c
6D8
6D9
28c

FIG. 14

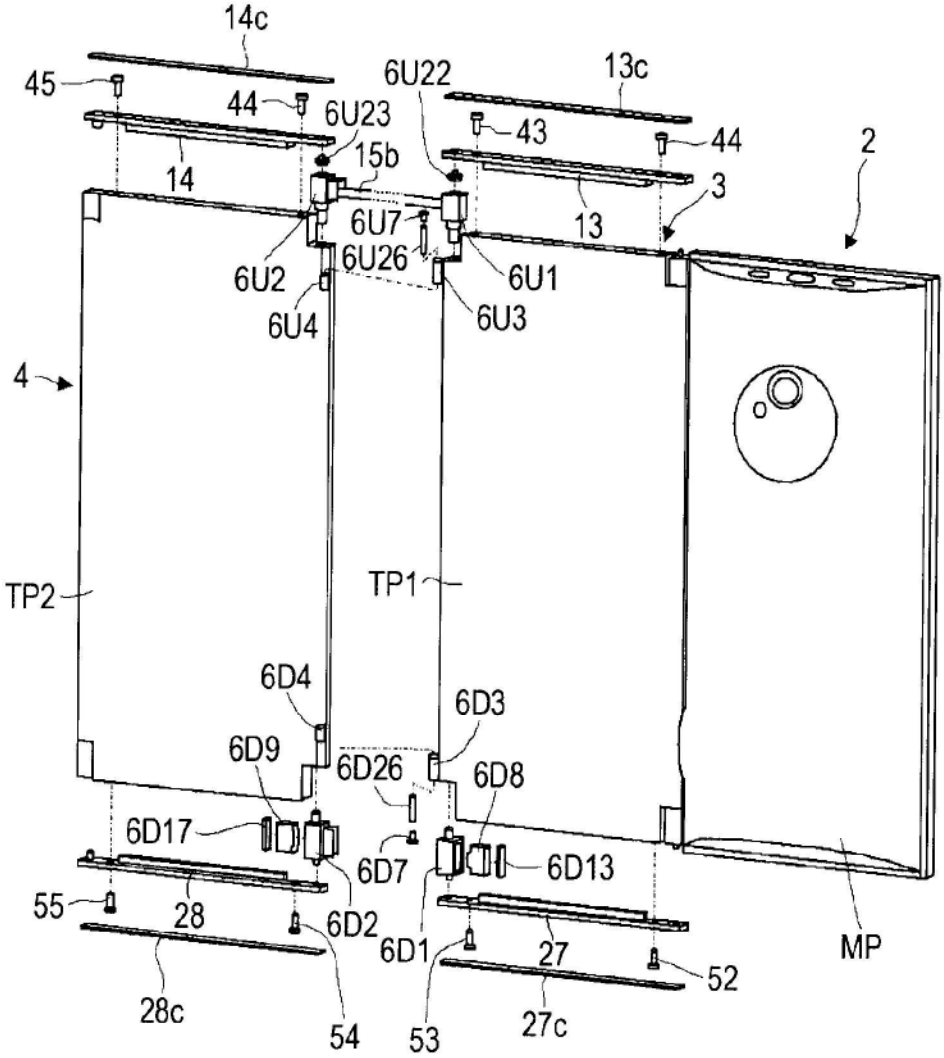
14c
45
44
6U23
6U22
13c
43
44
2
14
15b
3
6U7
13
6U26
6U2
6U1
6U4
6U3
4
TP2
TP1
6D4
6D3
6D9
6D26
6D8
6D17
6D7
6D13
55
28
6D2
6D1
27
52
MP
28c
54
53
27c

FIG. 15

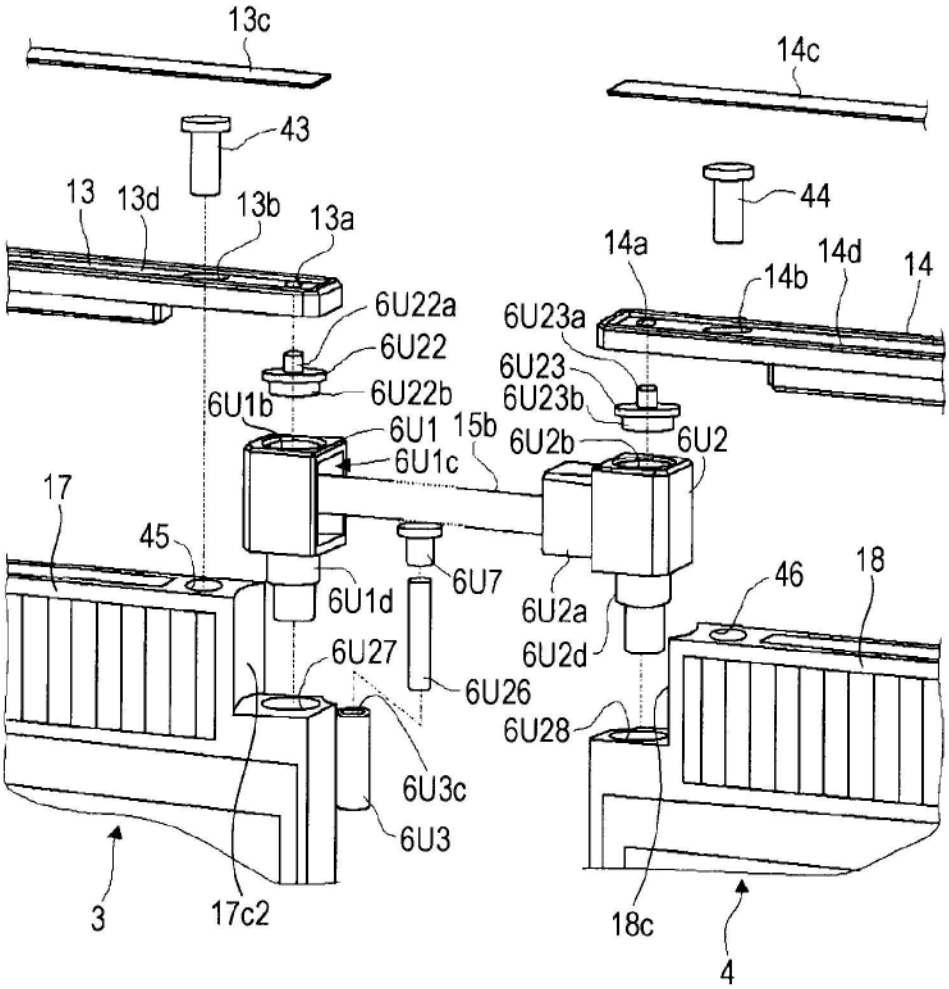
13c
14c
43
44
13
13d
13b
13a
14a
14b
14d
14
6U22a
6U22
6U22b
6U23a
6U23
6U23b
6U1b
6U1
6U1c
15b
6U2b
6U2
17
45
6U7
6U1d
6U2a
46
18
6U27
6U2d
6U26
6U28
6U3c
6U3
3
17c2
18c
4

FIG. 16

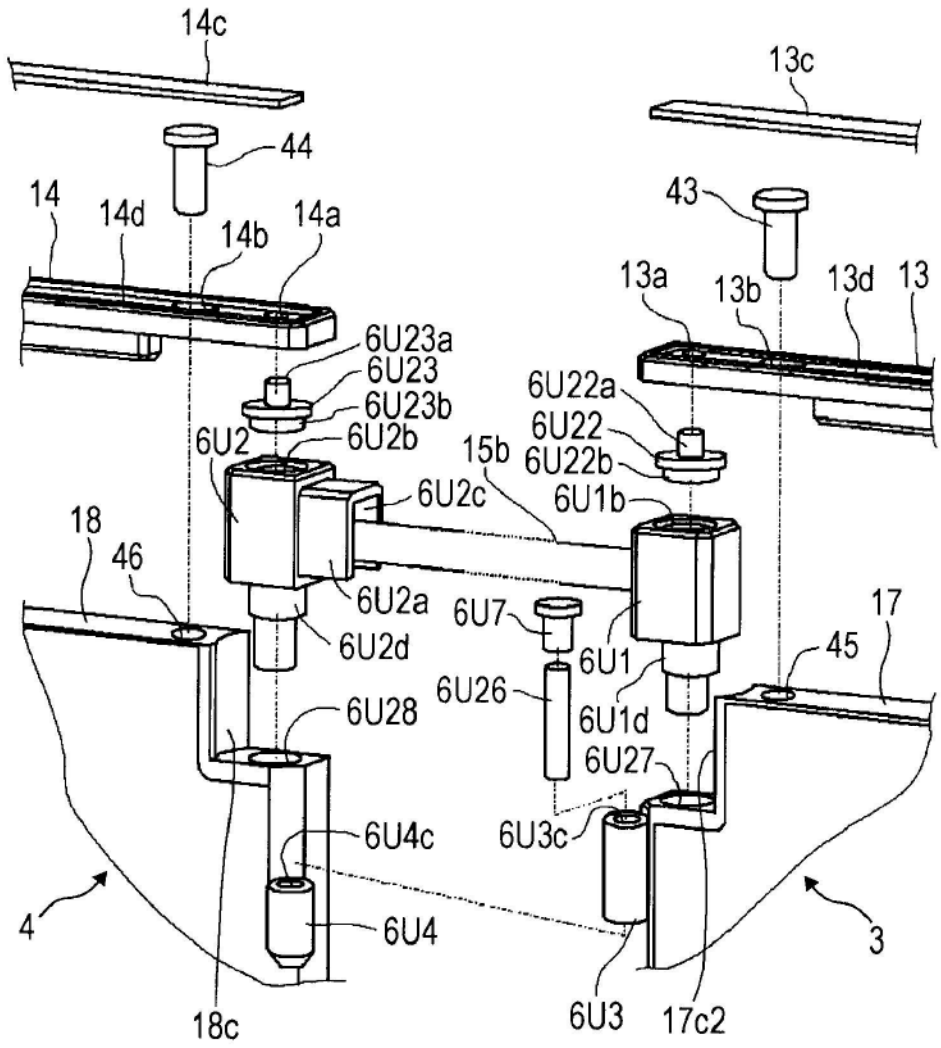
14c
13c
44
43
14
14d
14b
14a
13a
13b
13d
13
6U23a
6U23
6U23b
6U22a
6U22
6U22b
6U2
6U2b
15b
6U2c
6U1b
18
46
6U2a
6U7
17
6U2d
6U1
45
6U26
6U1d
6U28
6U27
6U4c
6U3c
4
6U4
3
18c
6U3
17c2

FIG. 17

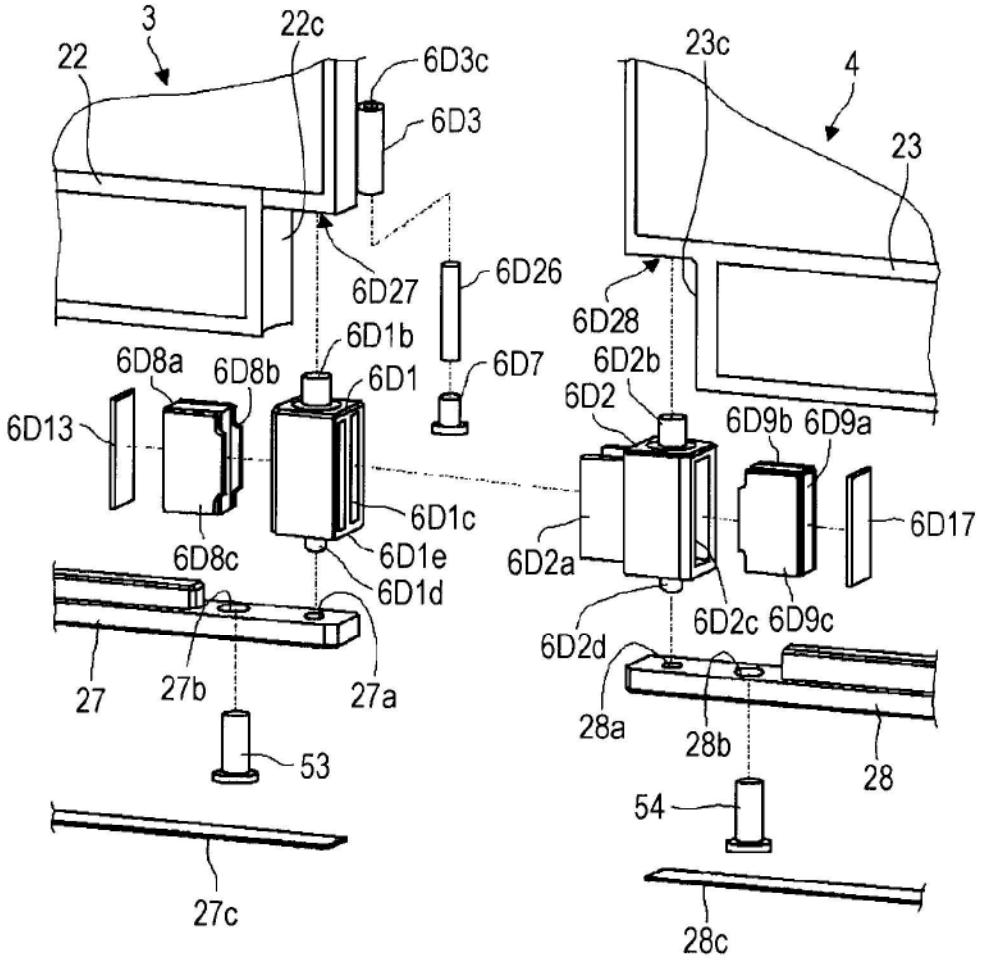
3
22
22c
6D3c
6D3
23c
4
23
6D27
6D26
6D28
6D1b
6D8a
6D8b
6D1
6D7
6D2b
6D2
6D13
6D9b
6D9a
6D1c
6D17
6D8c
6D1e
6D2a
6D1d
6D2c
6D9c
6D2d
27
27b
27a
28a
28b
28
53
54
27c
28c

FIG. 18

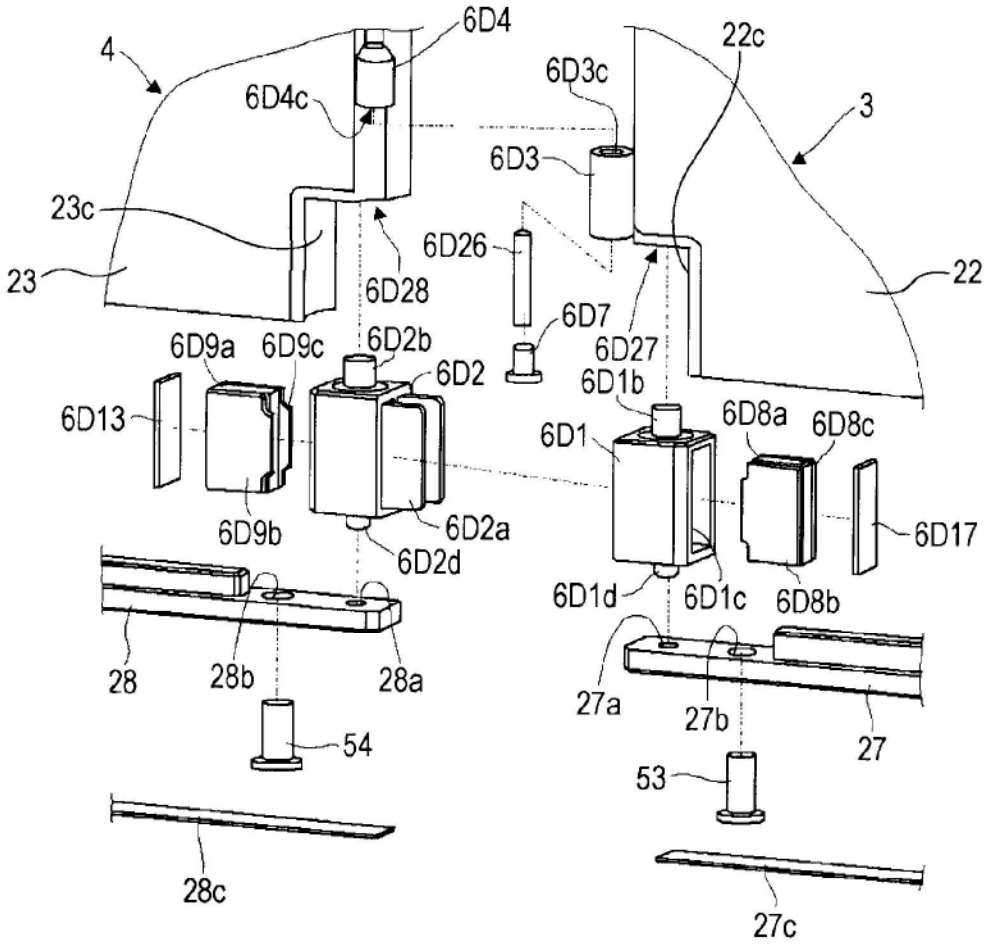
6D4
4
6D4c
22c
6D3c
3
6D3
23c
6D26
23
6D28
22
6D7
6D27
6D9a
6D9c
6D2b
6D2
6D1b
6D13
6D8a
6D8c
6D1
6D9b
6D2a
6D17
6D2d
6D1d
6D1c
6D8b
28
28b
28a
27a
27b
27
54
53
28c
27c

FIG. 19

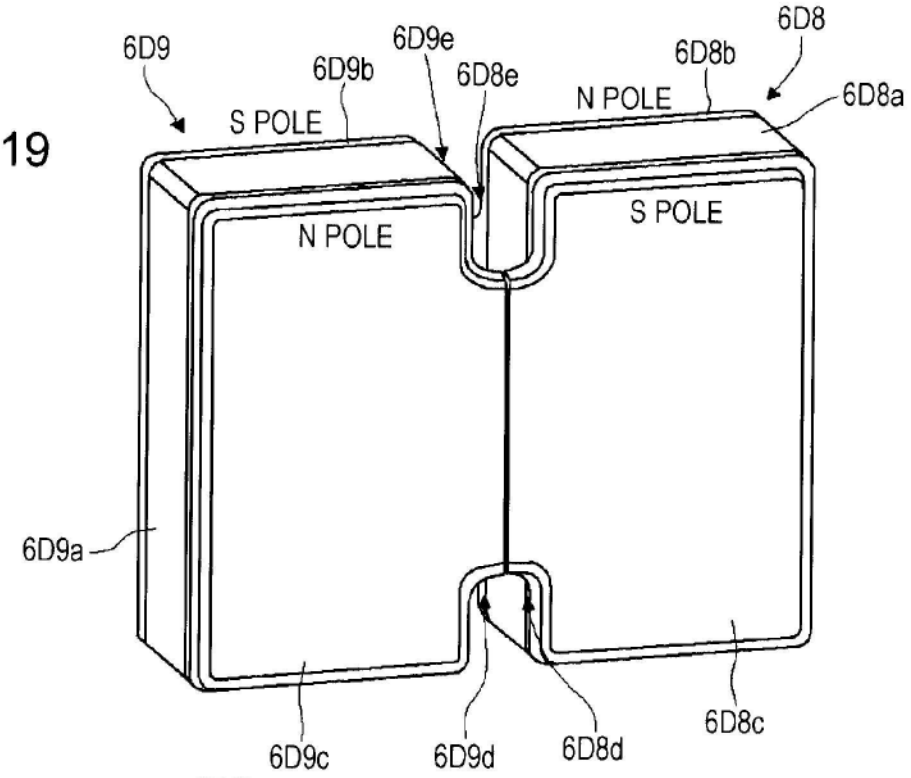
6D9
6D9b
6D9e
6D8e
6D8b
6D8
6D8a
S POLE
N POLE
N POLE
S POLE
6D9a
6D9c
6D9d
6D8d
6D8c

FIG. 20

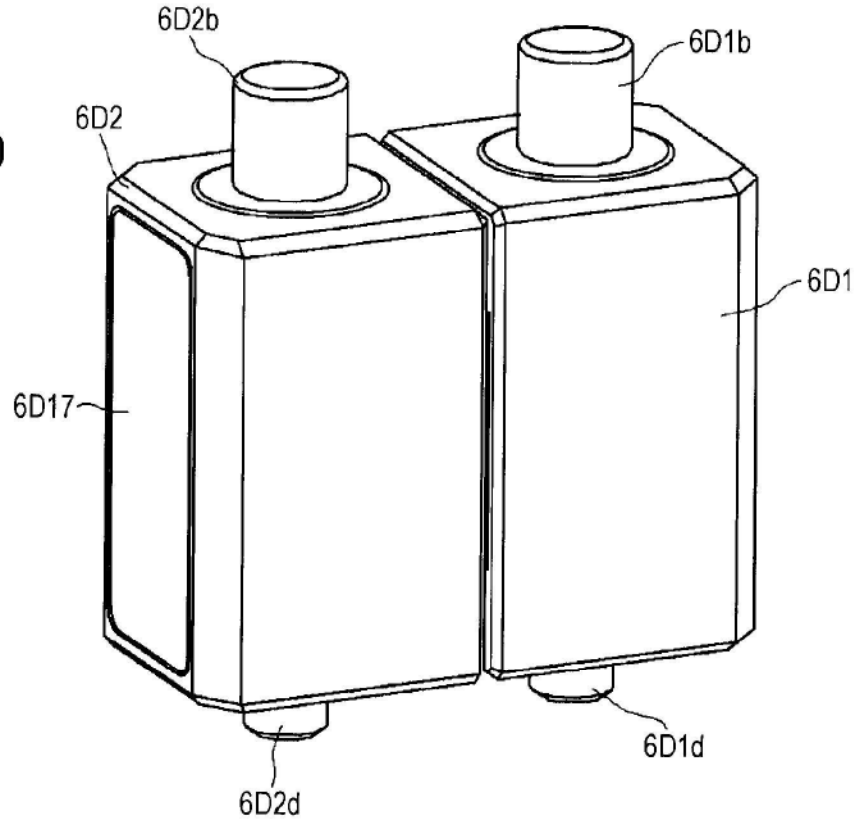
6D2b
6D1b
6D2
6D1
6D17
6D1d
6D2d

FIG. 21

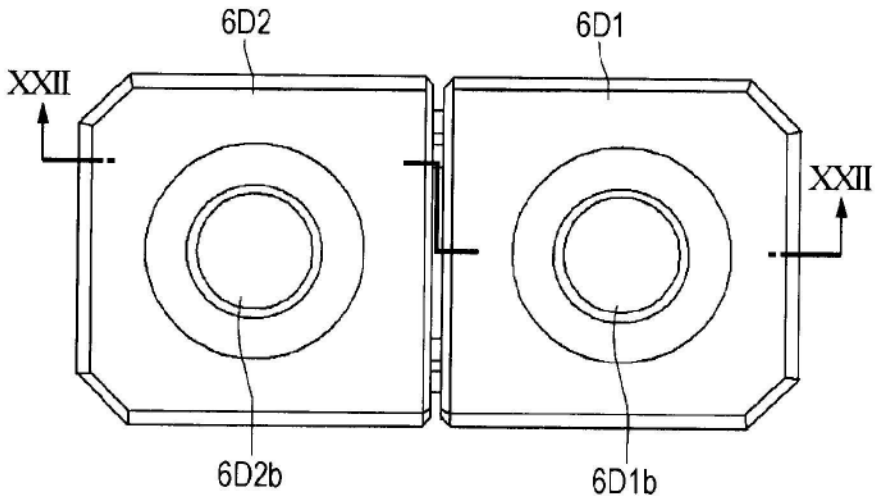
6D2
6D1
XXII
XXII
6D2b
6D1b

FIG. 22

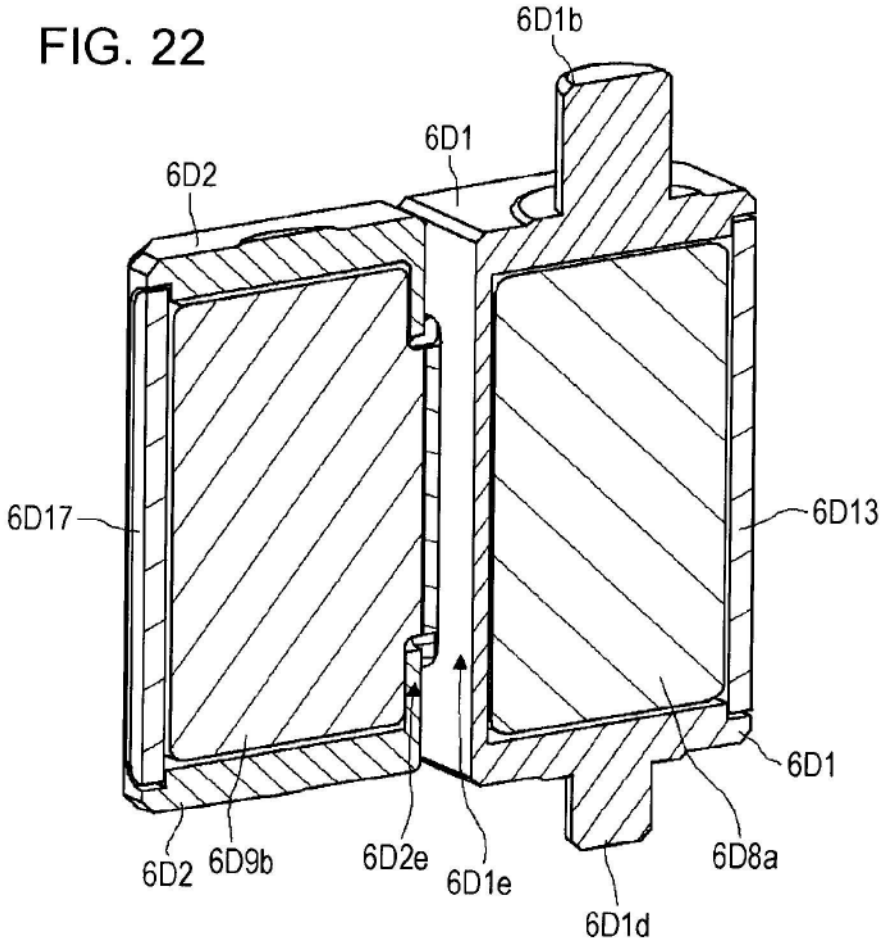
6D1b
6D1
6D2
6D17
6D13
6D1
6D2
6D9b
6D2e
6D1e
6D8a
6D1d

FIG. 23

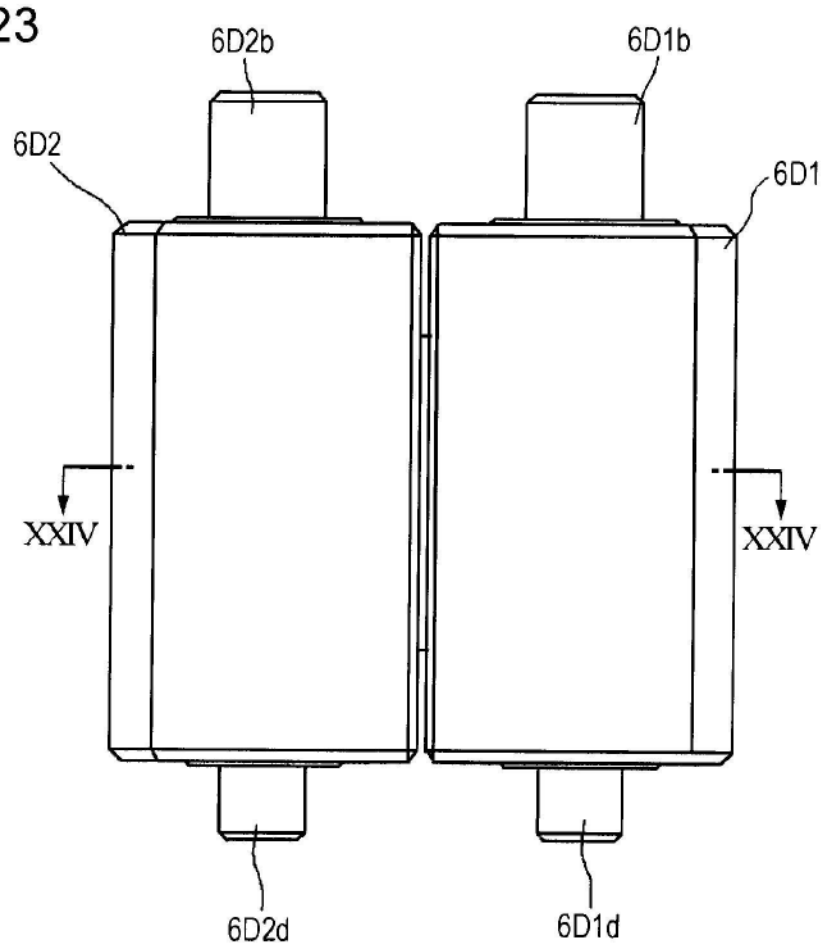
6D2b
6D1b
6D2
6D1
XXIV
XXIV
6D2d
6D1d

FIG. 24

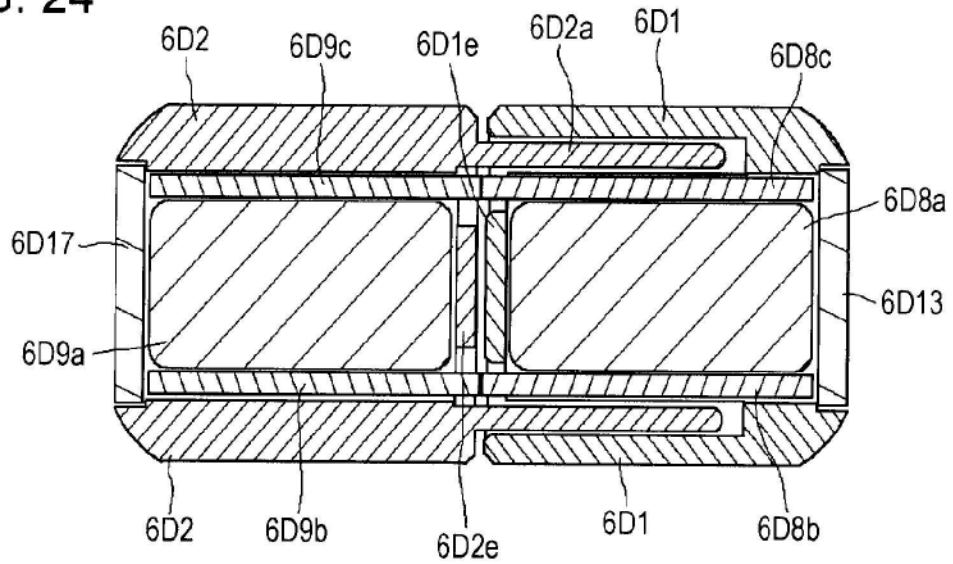
6D2
6D9c
6D1e
6D2a
6D1
6D8c
6D8a
6D17
6D13
6D9a
6D2
6D9b
6D2e
6D1
6D8b

FIG. 25

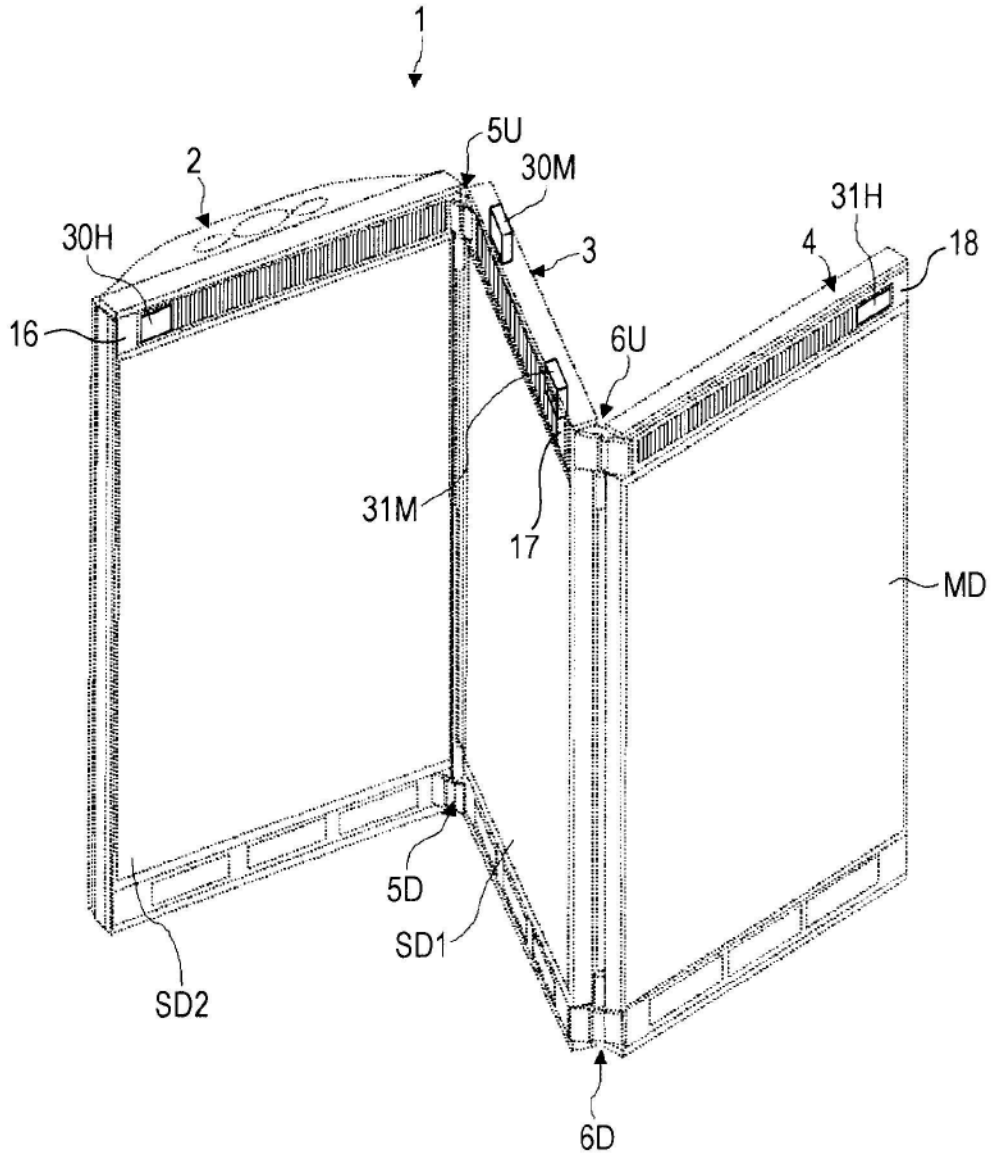

FIG. 26

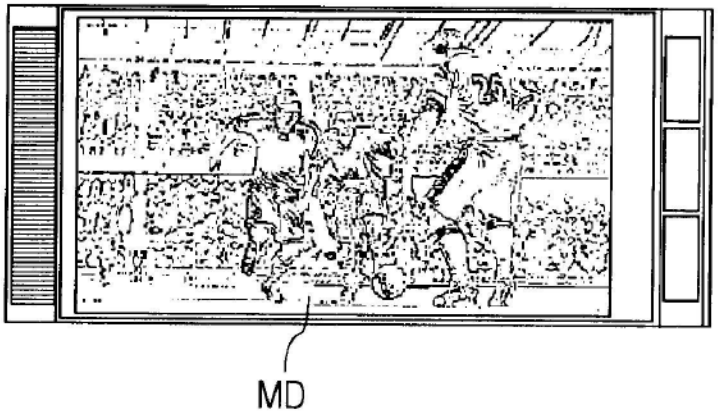

FIG. 27

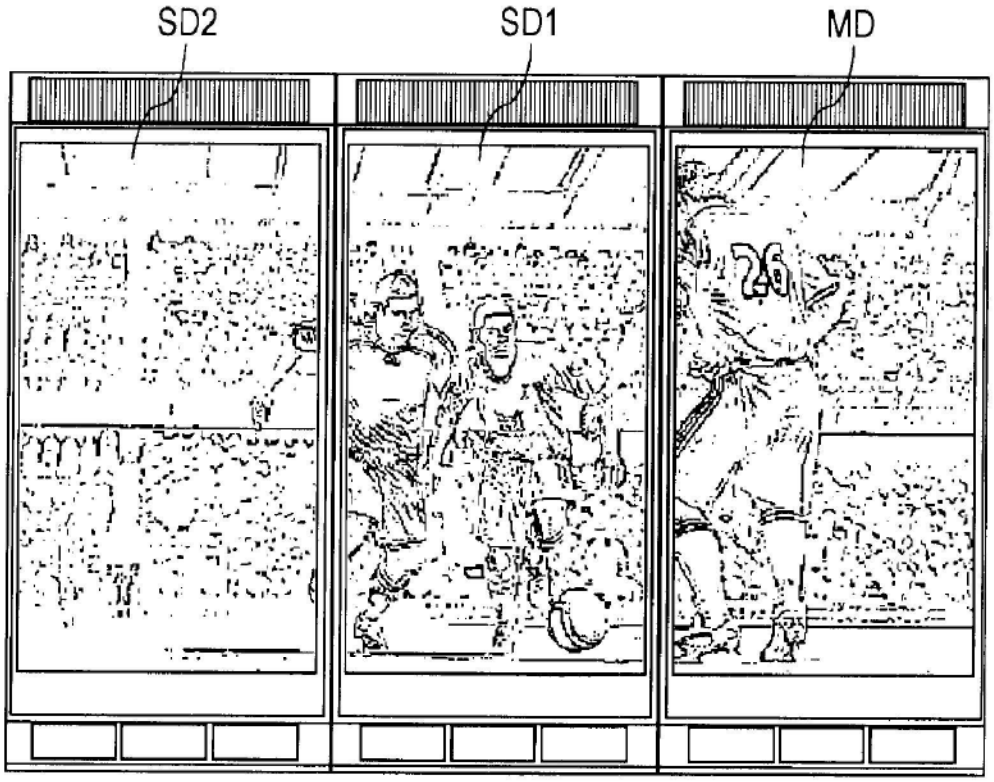

FIG. 28

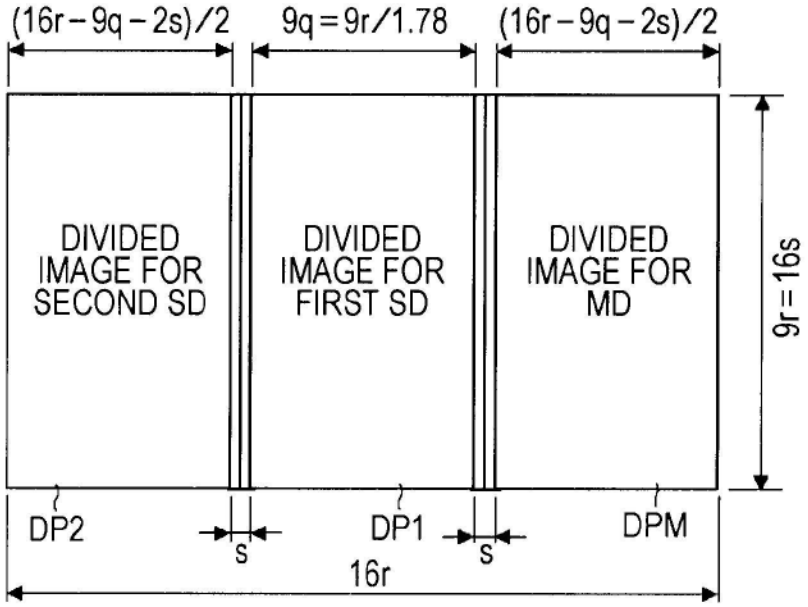
(16r−9q−2s)/2
9q=9r/1.78
(16r−9q−2s)/2
DIVIDED IMAGE FOR SECOND SD
DIVIDED IMAGE FOR FIRST SD
DIVIDED IMAGE FOR MD
9r=16s
DP2
DP1
DPM
s
s
16r

FIG. 29

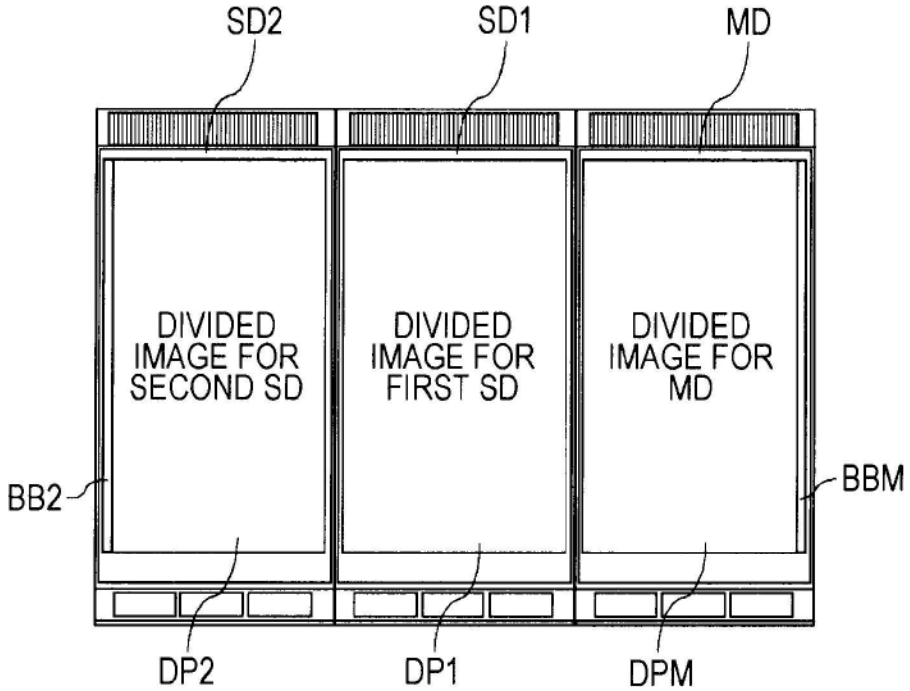
SD2
SD1
MD
DIVIDED IMAGE FOR SECOND SD
DIVIDED IMAGE FOR FIRST SD
DIVIDED IMAGE FOR MD
BB2
BBM
DP2
DP1
DPM

FIG. 30

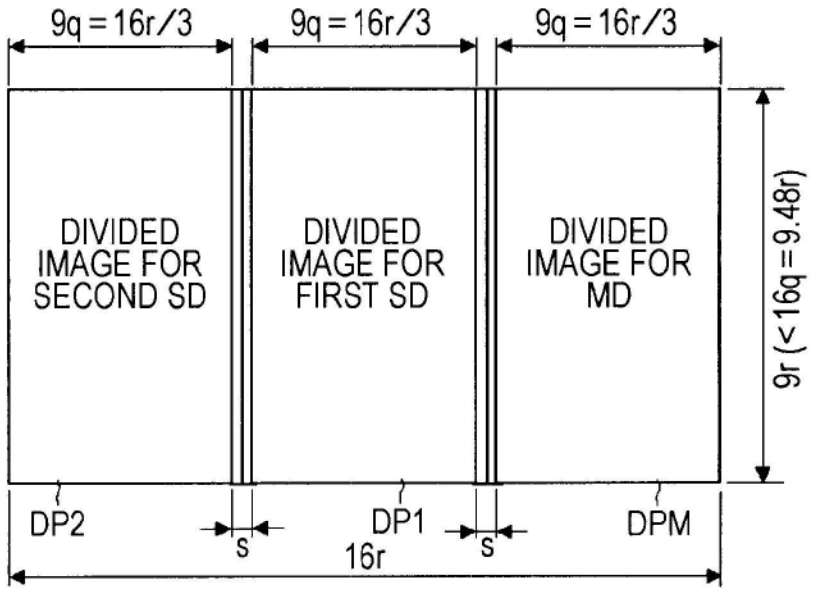
9q = 16r/3
9q = 16r/3
9q = 16r/3
DIVIDED IMAGE FOR SECOND SD
DIVIDED IMAGE FOR FIRST SD
DIVIDED IMAGE FOR MD
9r (< 16q = 9.48r)
DP2
DP1
DPM
s
s
16r

FIG. 31

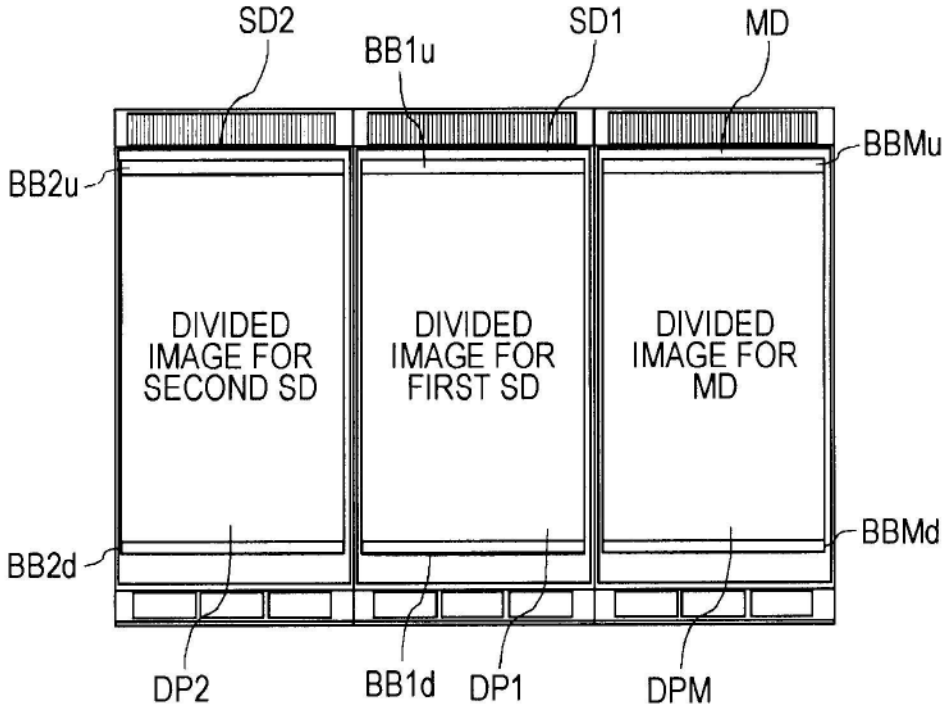
SD2
BB1u
SD1
MD
BBMu
BB2u
DIVIDED IMAGE FOR SECOND SD
DIVIDED IMAGE FOR FIRST SD
DIVIDED IMAGE FOR MD
BBMd
BB2d
DP2
BB1d
DP1
DPM

FIG. 32

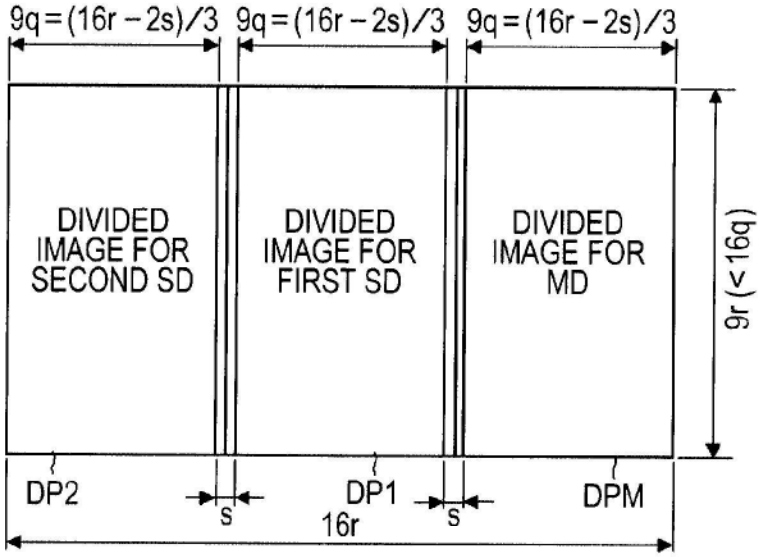
9q=(16r−2s)/3
9q=(16r−2s)/3
9q=(16r−2s)/3
DIVIDED IMAGE FOR SECOND SD
DIVIDED IMAGE FOR FIRST SD
DIVIDED IMAGE FOR MD
9r (<16q)
DP2
DP1
DPM
s
s
16r

FIG. 33

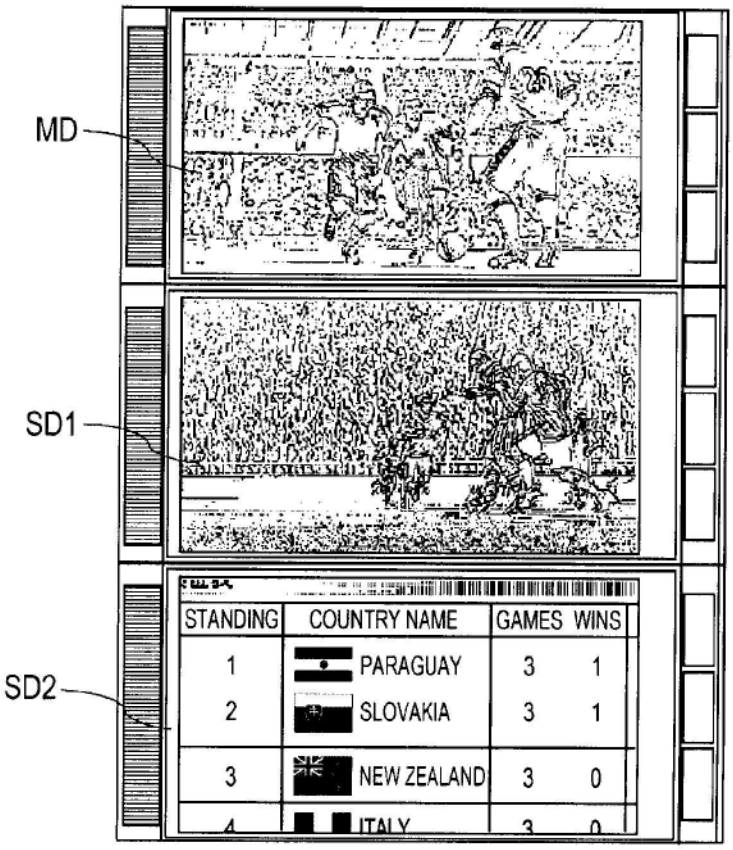
MD
SD1
SD2
STANDING
COUNTRY NAME
GAMES
WINS
1
PARAGUAY
3
1
2
SLOVAKIA
3
1
3
NEW ZEALAND
3
0
4
ITALY
3
0

FIG. 34

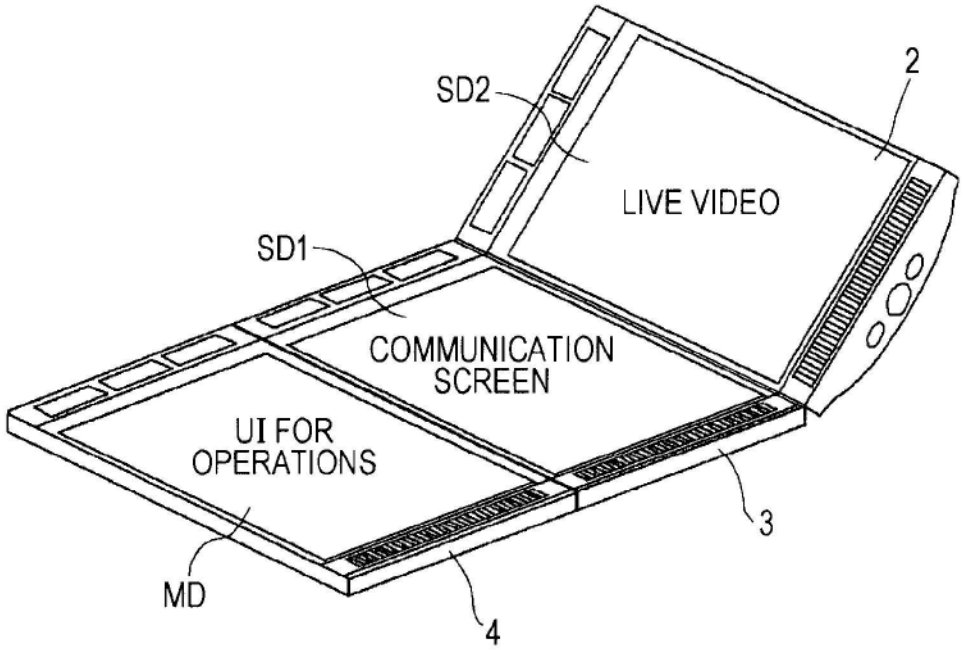
SD2
2
LIVE VIDEO
SD1
COMMUNICATION
SCREEN
UI FOR
OPERATIONS
3
MD
4

FIG. 35

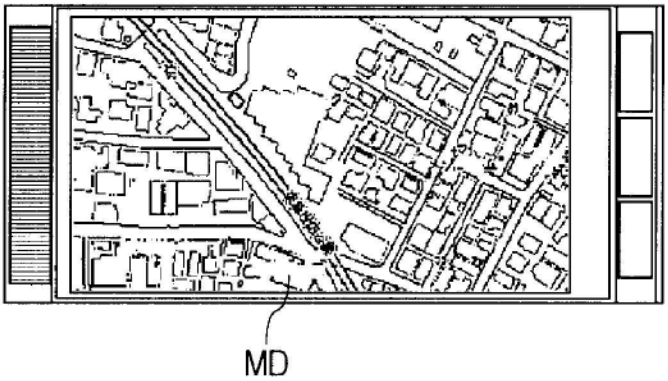

FIG. 36

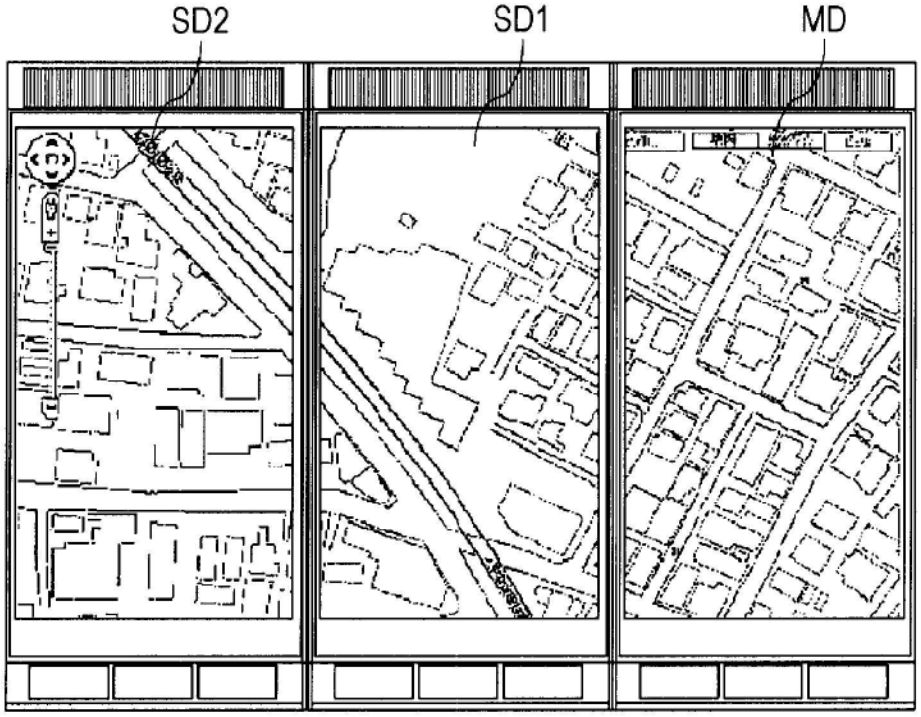

FIG. 37

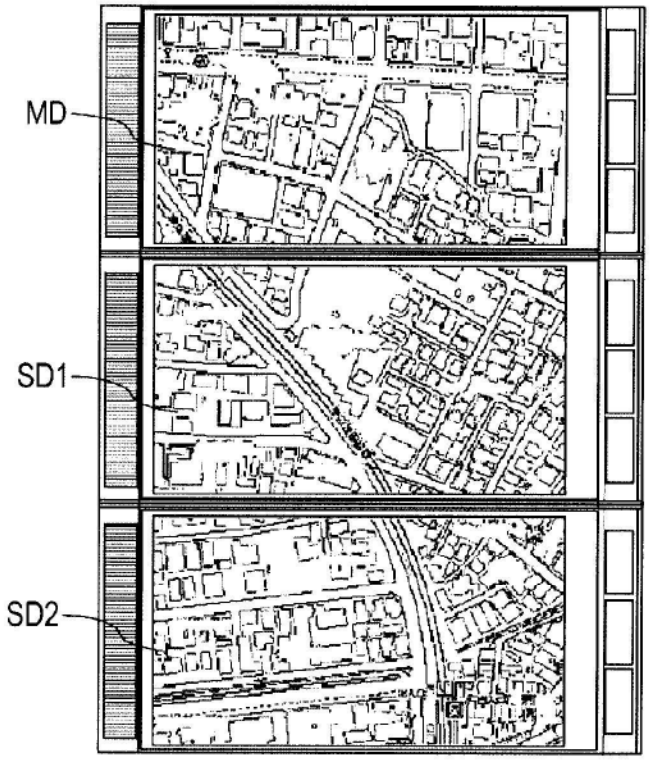

FIG. 38

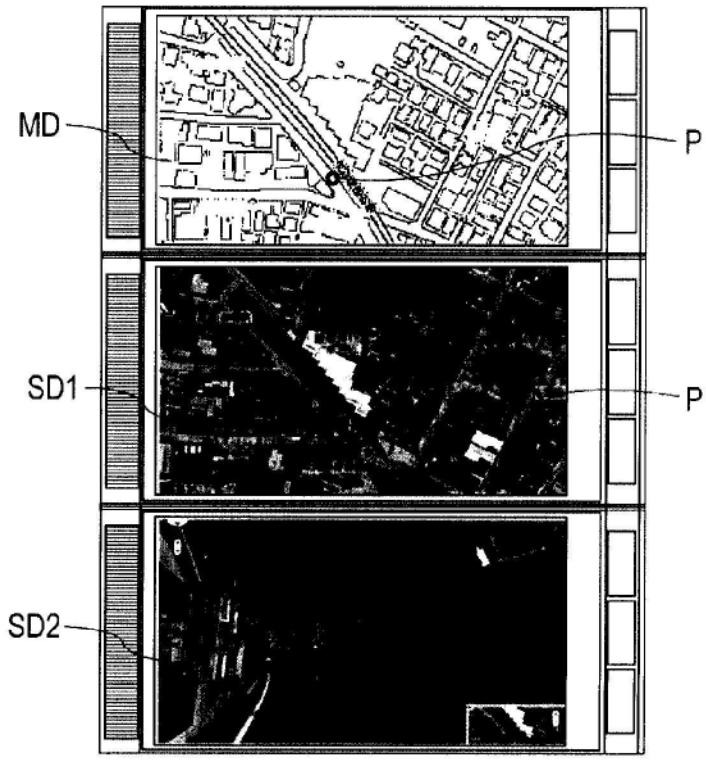

FIG. 39

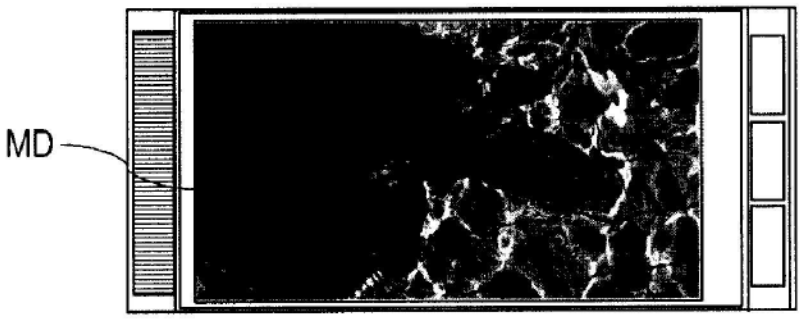

FIG. 40

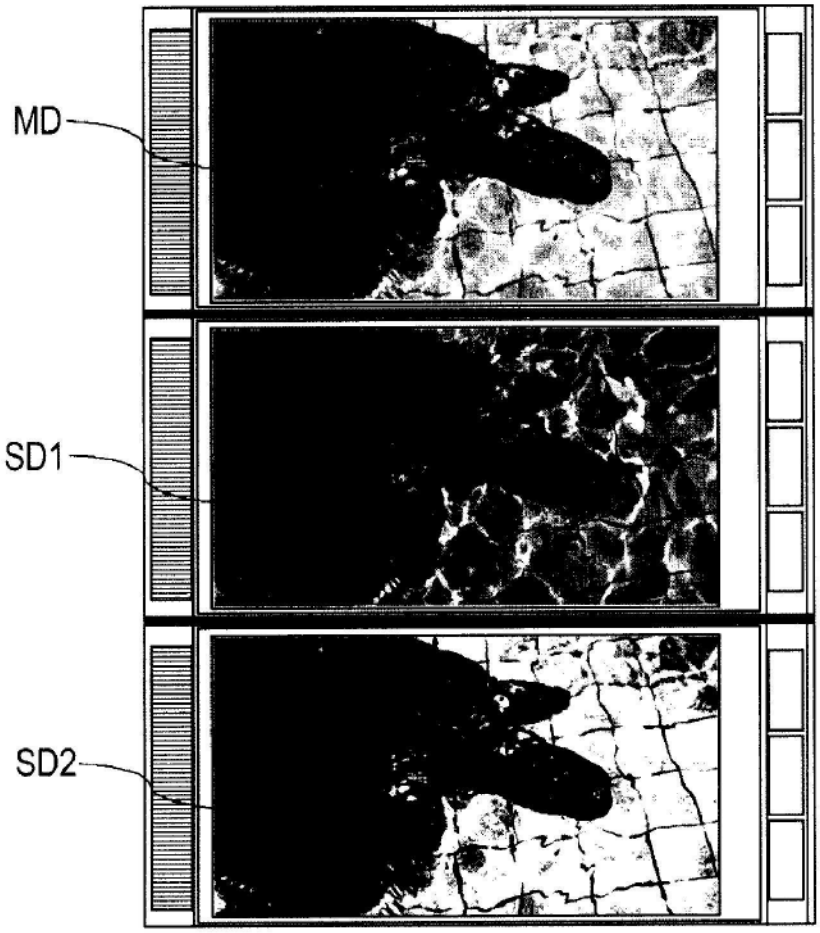

FIG. 41

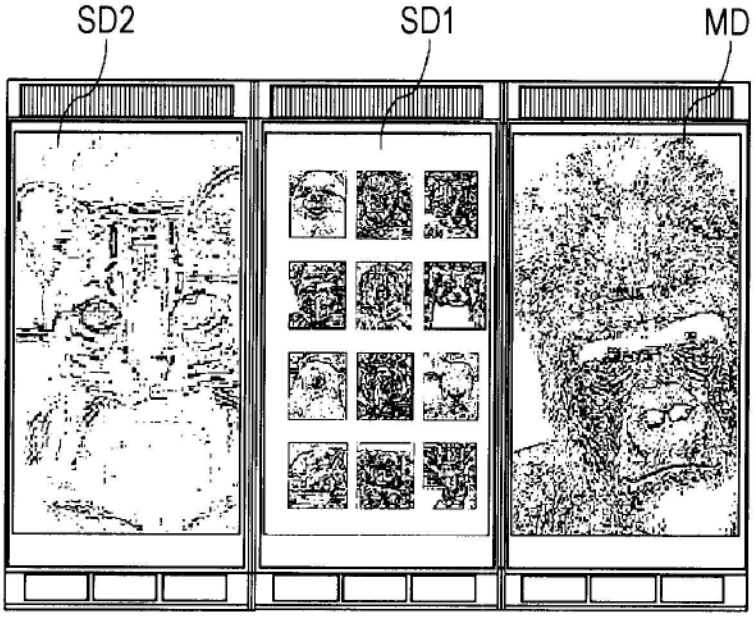

FIG. 42

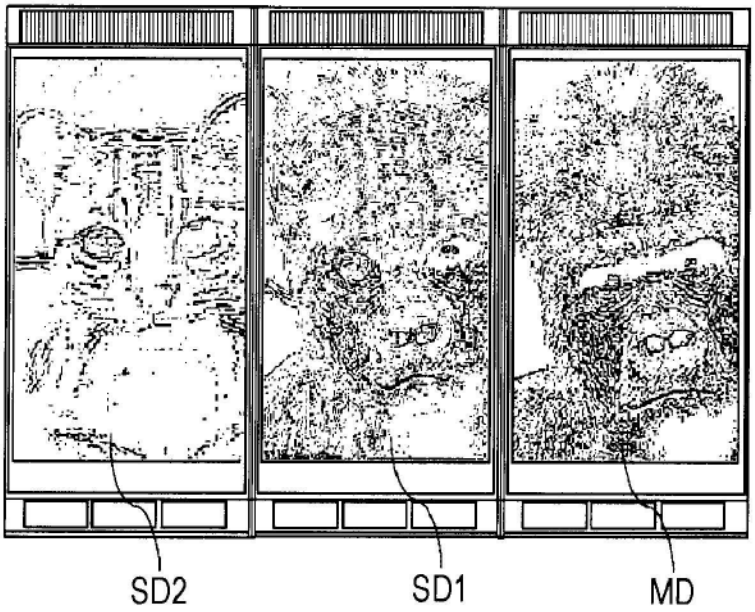

FIG. 43

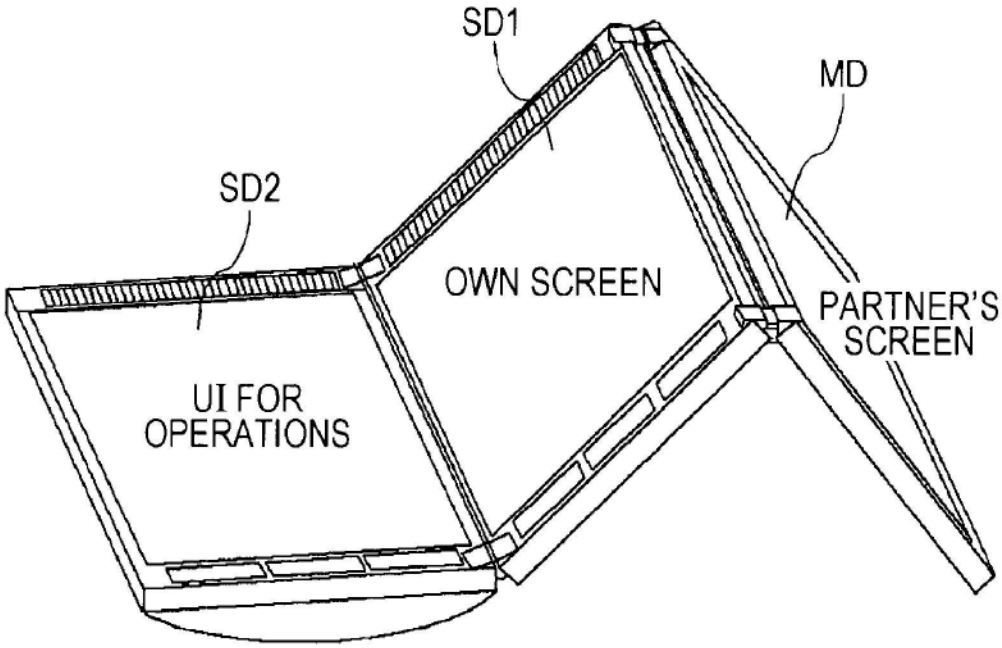
SD1
MD
SD2
OWN SCREEN
PARTNER'S SCREEN
UI FOR OPERATIONS

FIG. 44

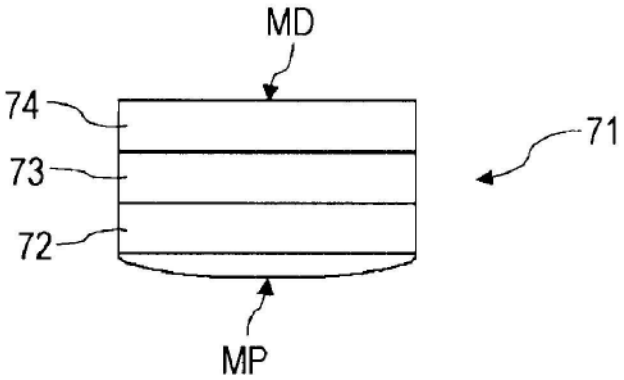
MD
74
73
72
71
MP

FIG. 45

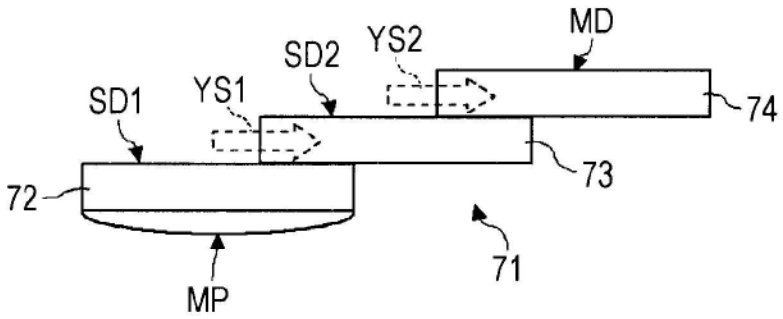
MD
YS2
SD2
YS1
SD1
74
73
72
71
MP

FIG. 46

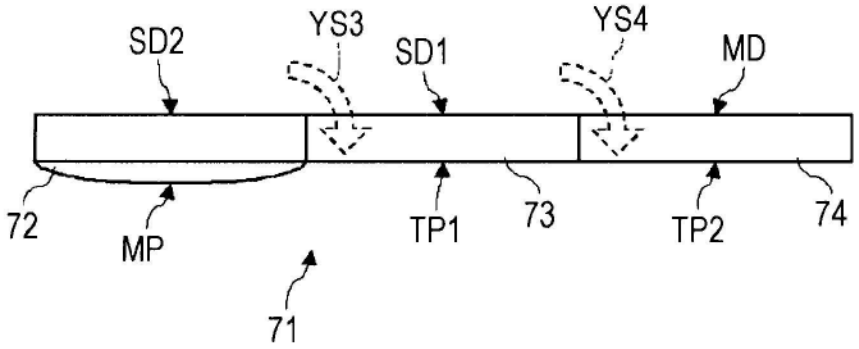
YS3
YS4
SD2
SD1
MD
72
MP
TP1
73
TP2
74
71

FIG. 47

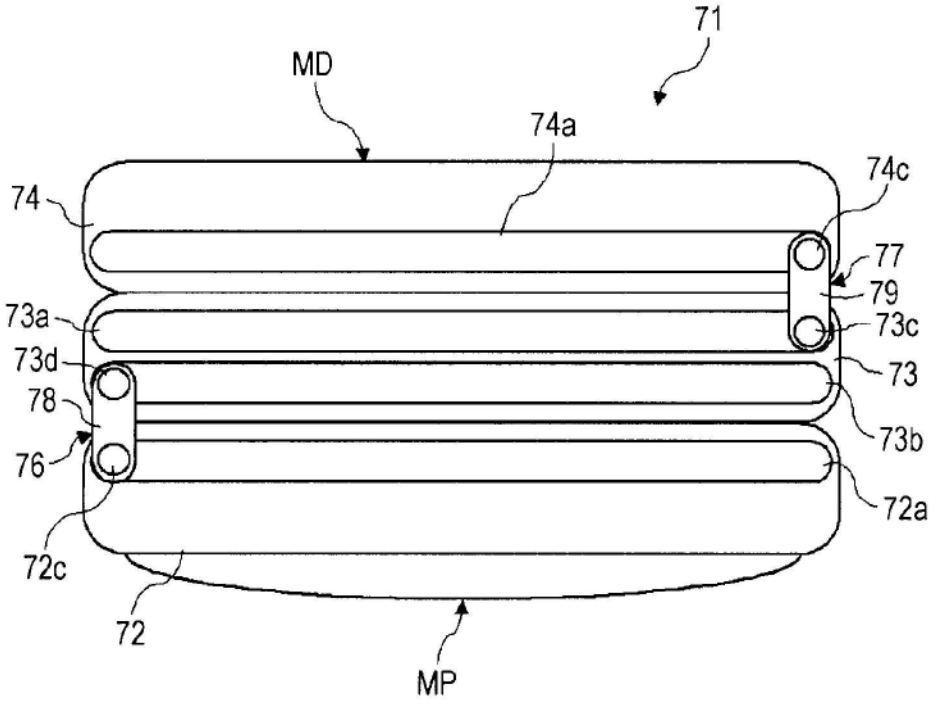

FIG. 48

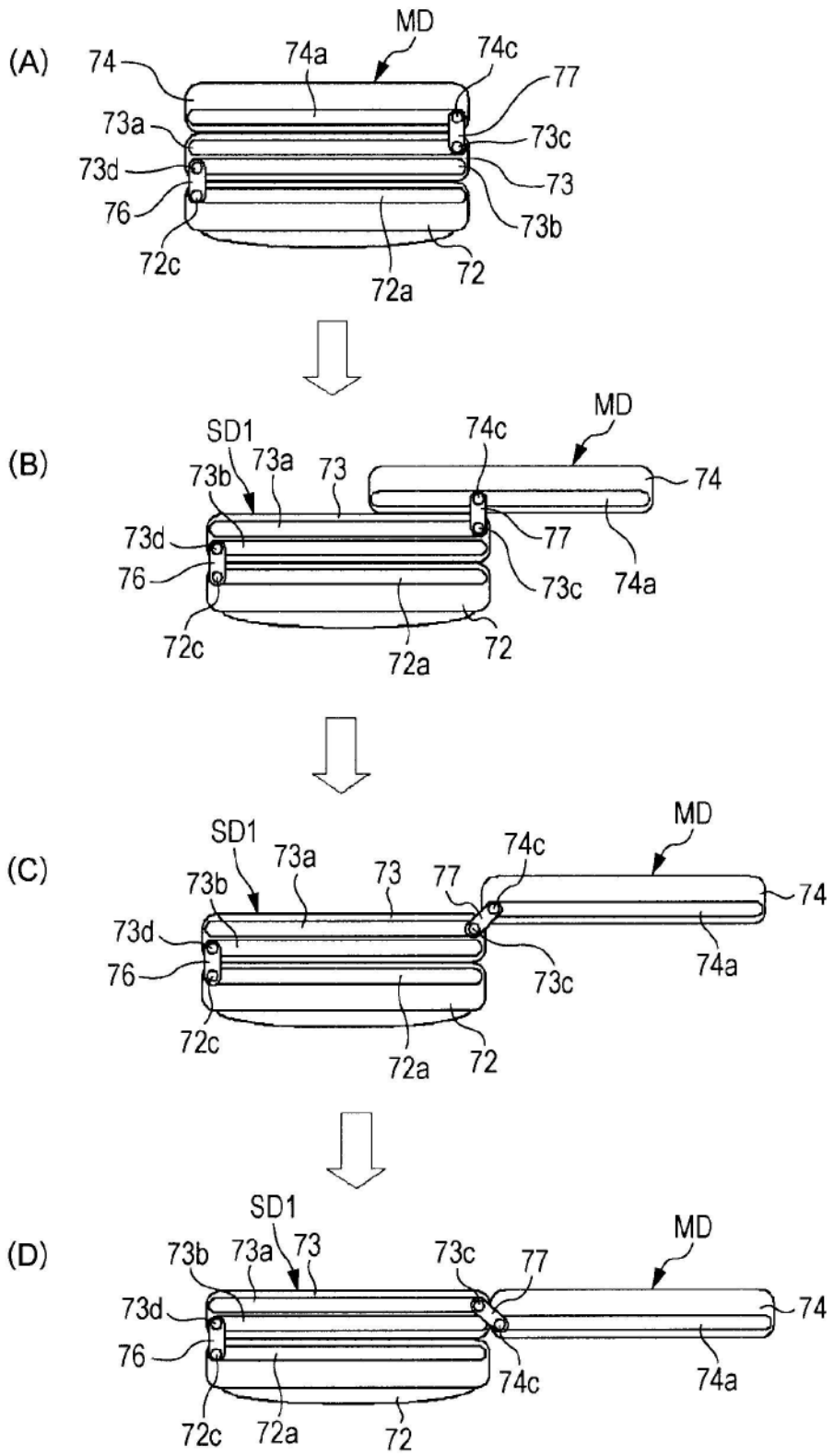
(A)
MD
74
74a
74c
77
73a
73c
73d
73
76
73b
72c
72a
72
(B)
SD1
73b
73a
73
74c
MD
74
73d
77
76
73c
74a
72c
72a
72
(C)
SD1
73a
73
77
74c
MD
73b
74
73d
76
73c
74a
72c
72a
72
(D)
SD1
73b
73a
73
73c
77
MD
73d
74
76
74c
74a
72c
72a
72

FIG. 49

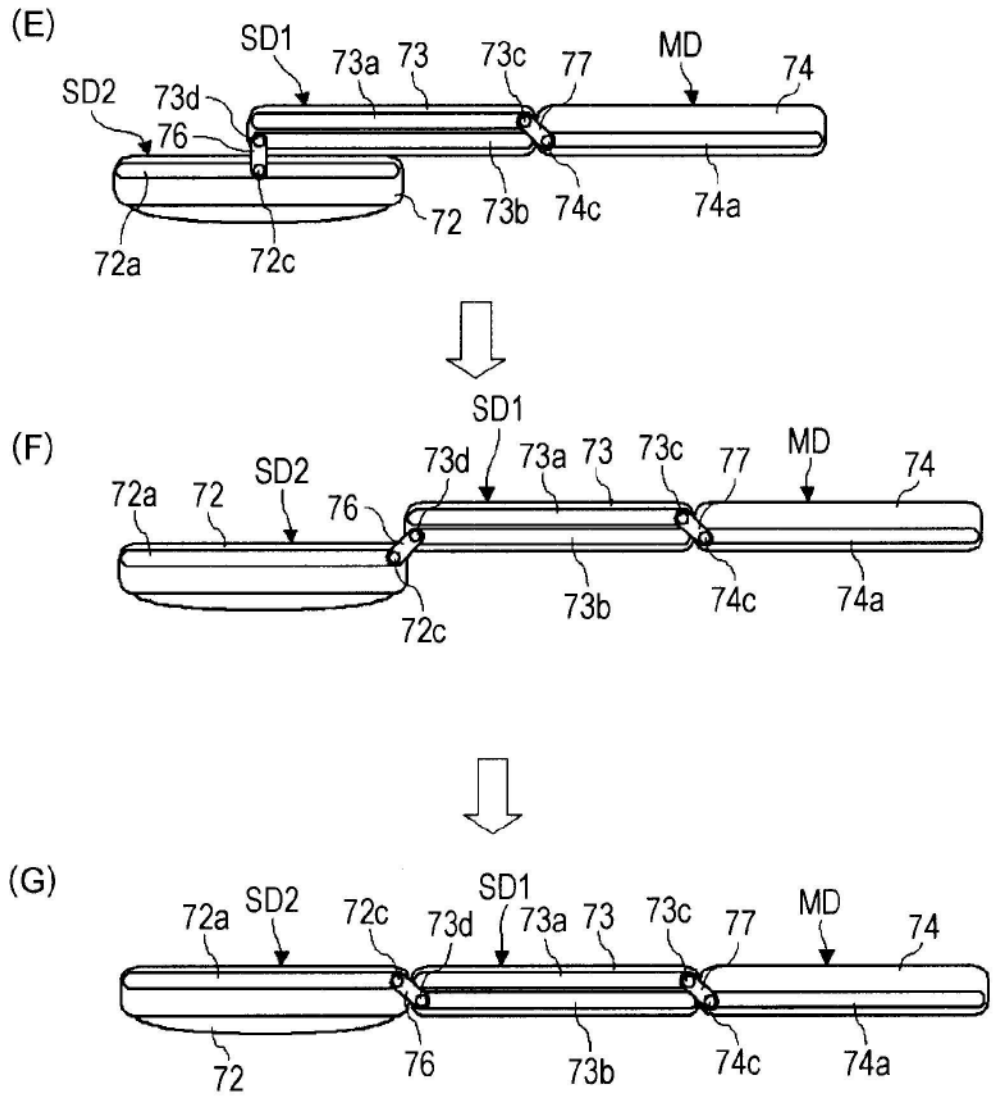
(E)
SD1
73a
73
73c
77
MD
74
SD2
73d
76
72
73b
74c
74a
72a
72c
(F)
SD1
73d
73a
73
73c
77
MD
74
72a
72
SD2
76
72c
73b
74c
74a
(G)
72a
SD2
72c
SD1
73d
73a
73
73c
77
MD
74
72
76
73b
74c
74a

FIG. 50

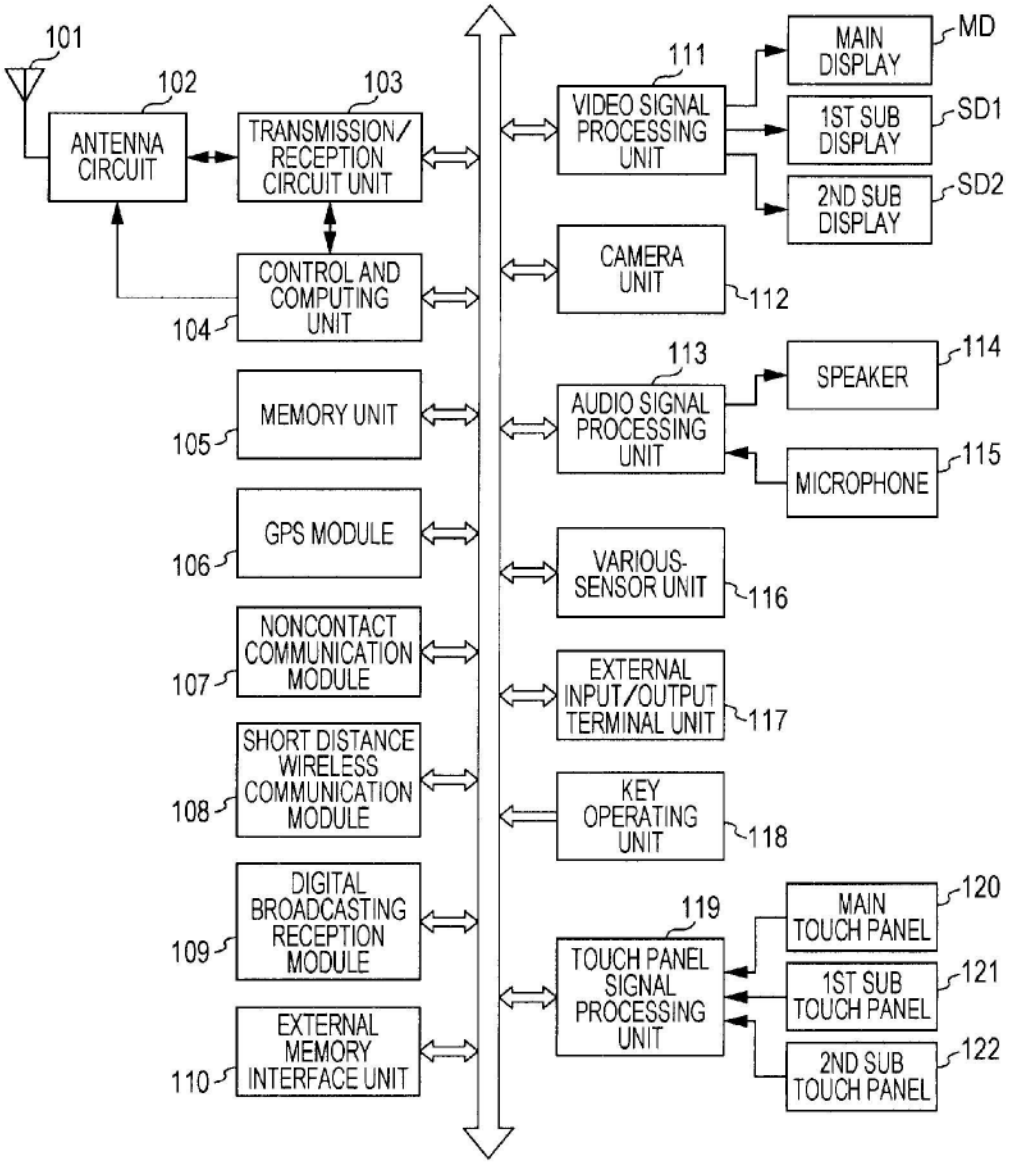
101
102
ANTENNA CIRCUIT
103
TRANSMISSION/ RECEPTION CIRCUIT UNIT
CONTROL AND COMPUTING UNIT
104
MEMORY UNIT
105
GPS MODULE
106
NONCONTACT COMMUNICATION MODULE
107
SHORT DISTANCE WIRELESS COMMUNICATION MODULE
108
DIGITAL BROADCASTING RECEPTION MODULE
109
EXTERNAL MEMORY INTERFACE UNIT
110
111
VIDEO SIGNAL PROCESSING UNIT
MAIN DISPLAY
MD
1ST SUB DISPLAY
SD1
2ND SUB DISPLAY
SD2
CAMERA UNIT
112
113
AUDIO SIGNAL PROCESSING UNIT
SPEAKER
114
MICROPHONE
115
VARIOUS-SENSOR UNIT
116
EXTERNAL INPUT/OUTPUT TERMINAL UNIT
117
KEY OPERATING UNIT
118
119
TOUCH PANEL SIGNAL PROCESSING UNIT
MAIN TOUCH PANEL
120
1ST SUB TOUCH PANEL
121
2ND SUB TOUCH PANEL
122

FIG. 51

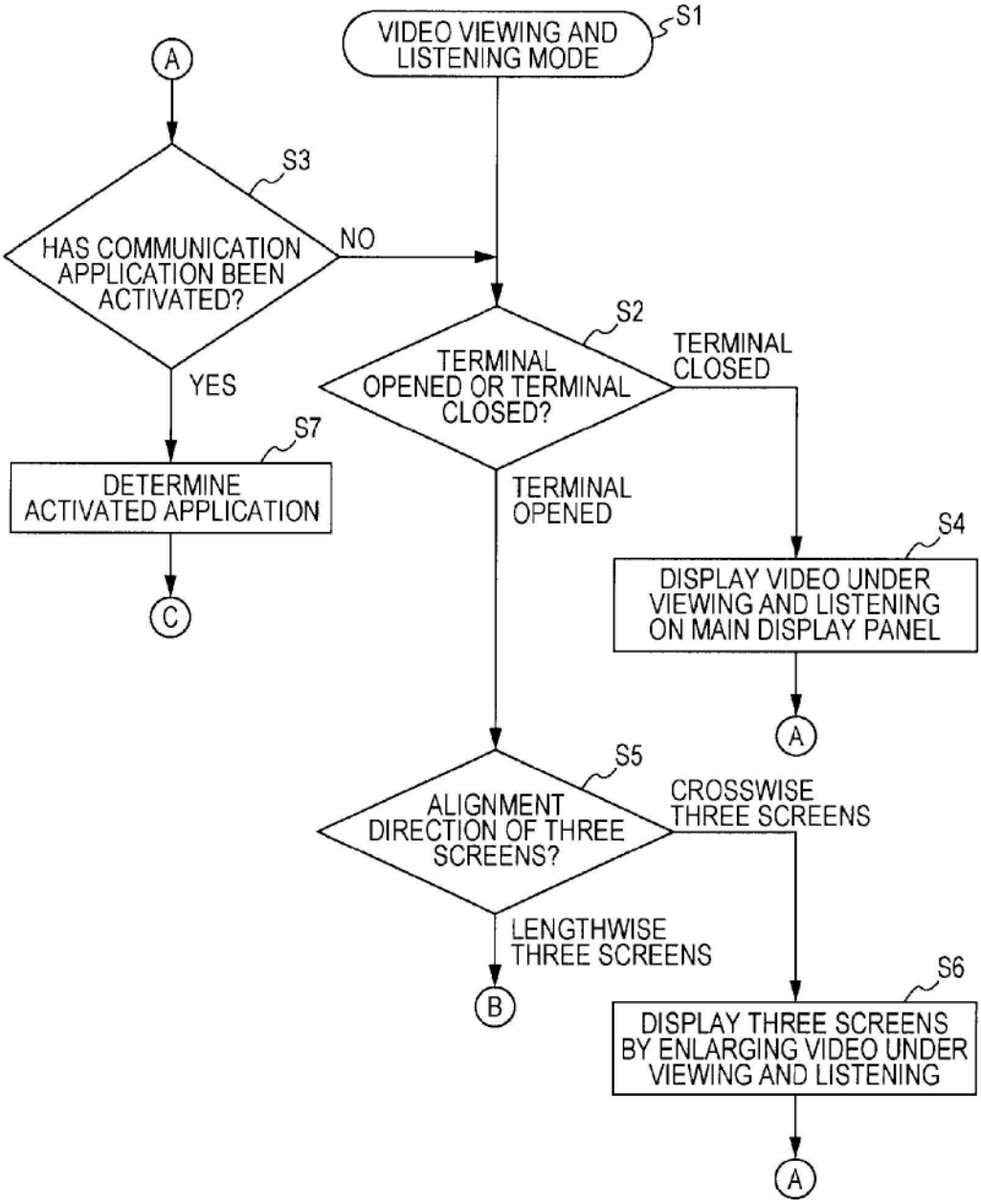
VIDEO VIEWING AND LISTENING MODE
S1
A
S3
HAS COMMUNICATION APPLICATION BEEN ACTIVATED?
NO
YES
S2
TERMINAL OPENED OR TERMINAL CLOSED?
TERMINAL CLOSED
TERMINAL OPENED
S7
DETERMINE ACTIVATED APPLICATION
C
S4
DISPLAY VIDEO UNDER VIEWING AND LISTENING ON MAIN DISPLAY PANEL
A
S5
ALIGNMENT DIRECTION OF THREE SCREENS?
CROSSWISE THREE SCREENS
LENGTHWISE THREE SCREENS
B
S6
DISPLAY THREE SCREENS BY ENLARGING VIDEO UNDER VIEWING AND LISTENING
A

FIG. 52

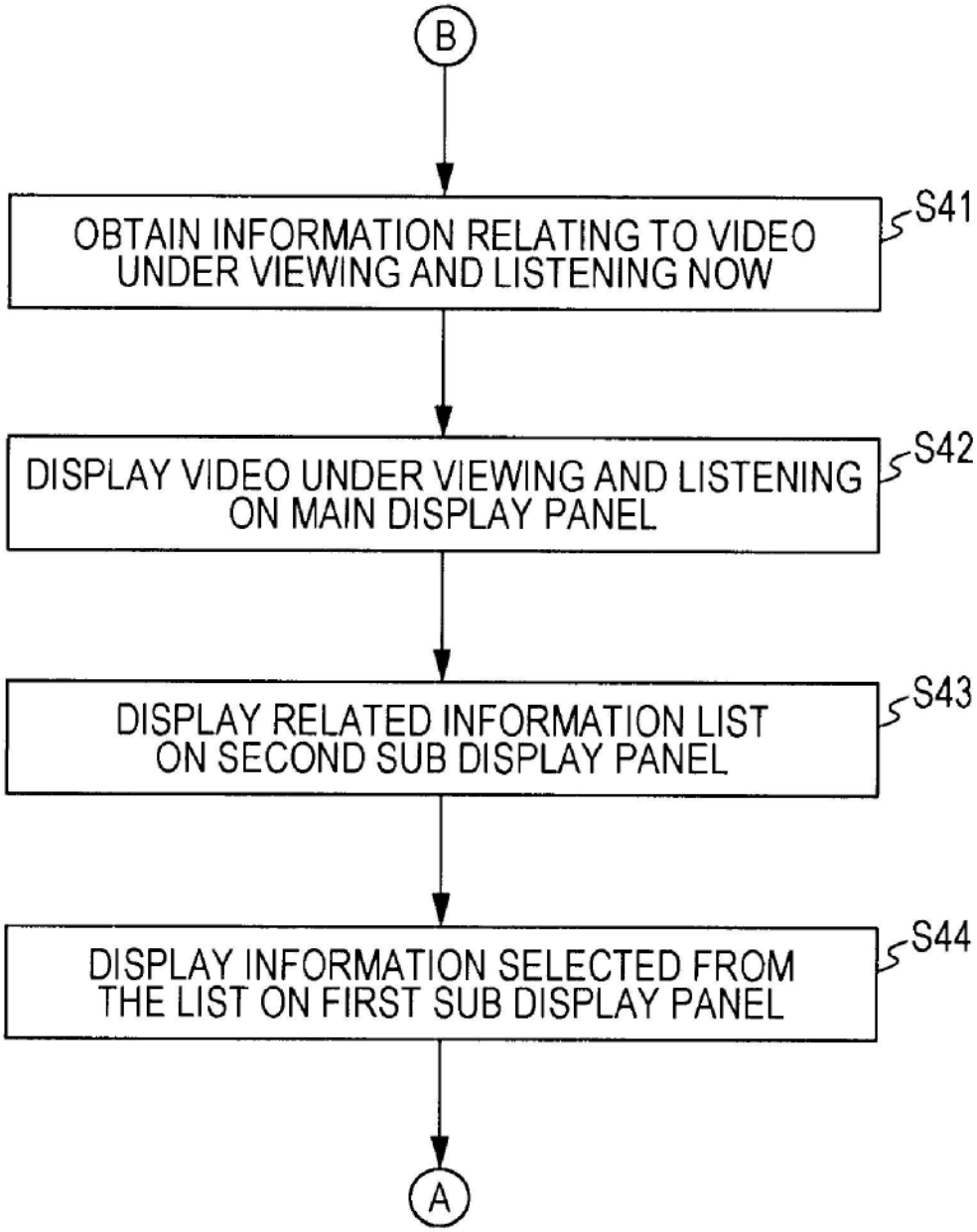
B
OBTAIN INFORMATION RELATING TO VIDEO UNDER VIEWING AND LISTENING NOW
S41
DISPLAY VIDEO UNDER VIEWING AND LISTENING ON MAIN DISPLAY PANEL
S42
DISPLAY RELATED INFORMATION LIST ON SECOND SUB DISPLAY PANEL
S43
DISPLAY INFORMATION SELECTED FROM THE LIST ON FIRST SUB DISPLAY PANEL
S44
A

FIG. 53

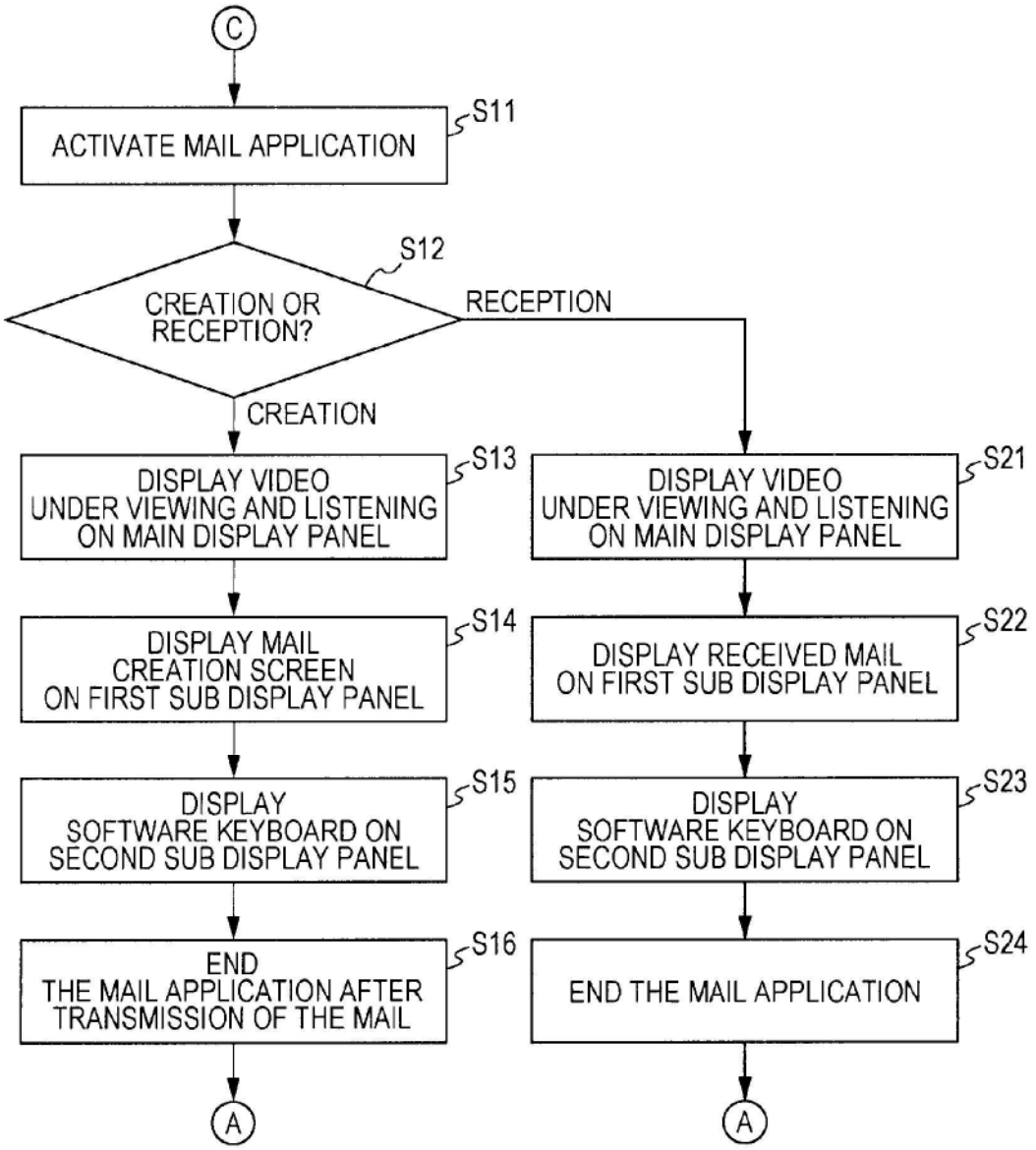
C
ACTIVATE MAIL APPLICATION
S11
CREATION OR RECEPTION?
S12
RECEPTION
CREATION
DISPLAY VIDEO UNDER VIEWING AND LISTENING ON MAIN DISPLAY PANEL
S13
DISPLAY MAIL CREATION SCREEN ON FIRST SUB DISPLAY PANEL
S14
DISPLAY SOFTWARE KEYBOARD ON SECOND SUB DISPLAY PANEL
S15
END THE MAIL APPLICATION AFTER TRANSMISSION OF THE MAIL
S16
A
DISPLAY VIDEO UNDER VIEWING AND LISTENING ON MAIN DISPLAY PANEL
S21
DISPLAY RECEIVED MAIL ON FIRST SUB DISPLAY PANEL
S22
DISPLAY SOFTWARE KEYBOARD ON SECOND SUB DISPLAY PANEL
S23
END THE MAIL APPLICATION
S24
A

FIG. 54

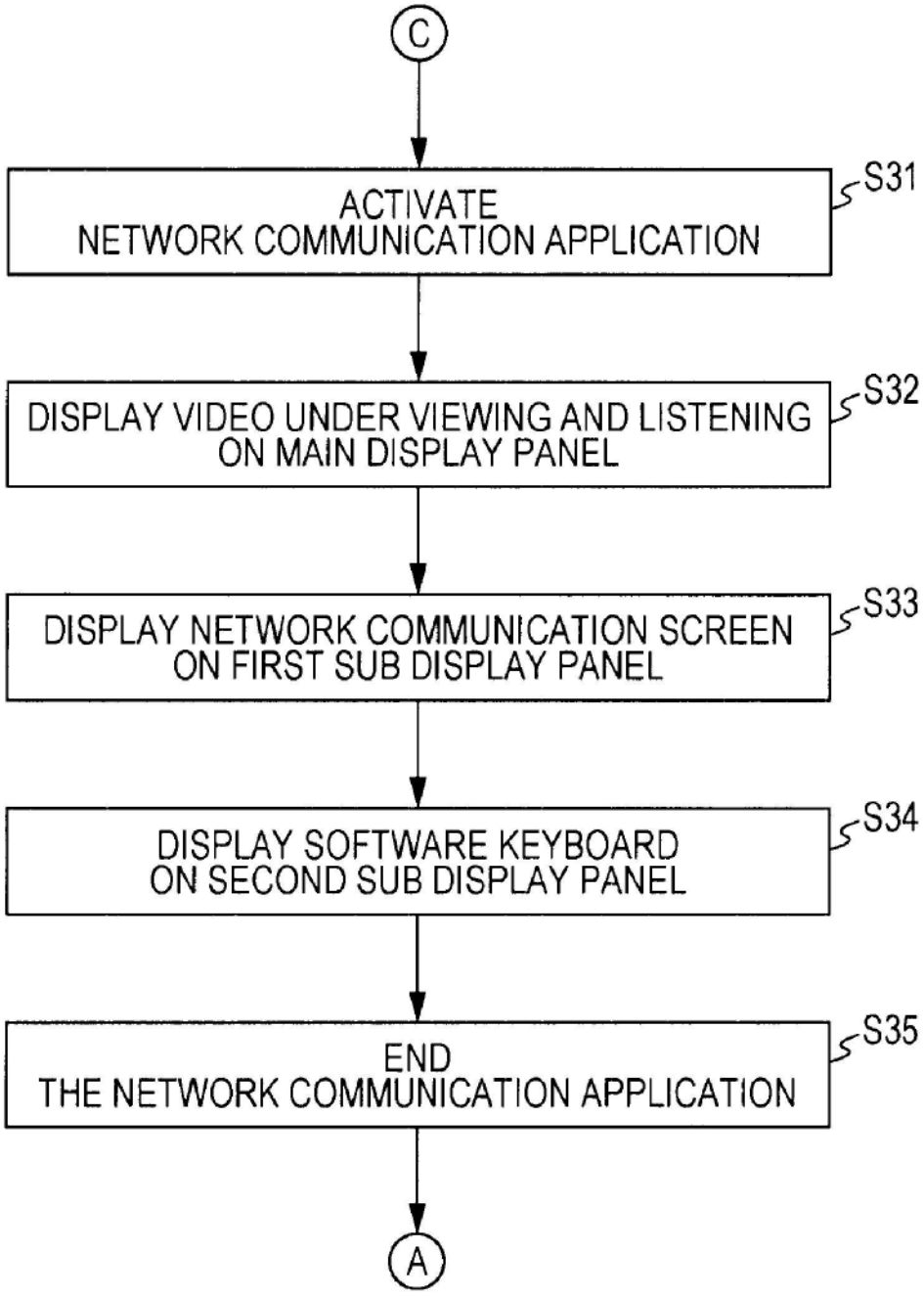
C
ACTIVATE
NETWORK COMMUNICATION APPLICATION
S31
DISPLAY VIDEO UNDER VIEWING AND LISTENING
ON MAIN DISPLAY PANEL
S32
DISPLAY NETWORK COMMUNICATION SCREEN
ON FIRST SUB DISPLAY PANEL
S33
DISPLAY SOFTWARE KEYBOARD
ON SECOND SUB DISPLAY PANEL
S34
END
THE NETWORK COMMUNICATION APPLICATION
S35
A

FIG. 55

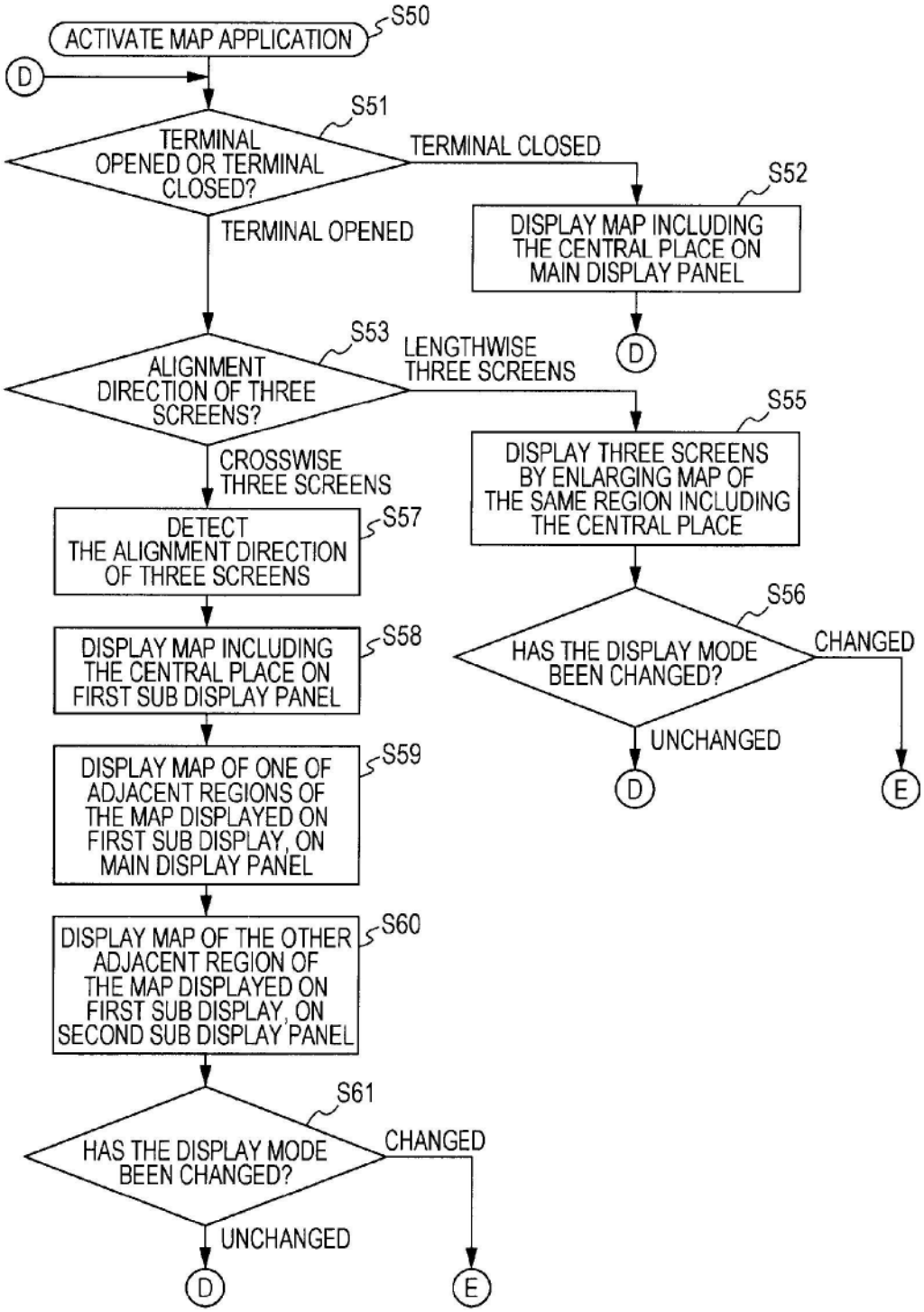
ACTIVATE MAP APPLICATION
S50
D
S51
TERMINAL OPENED OR TERMINAL CLOSED?
TERMINAL CLOSED
S52
DISPLAY MAP INCLUDING THE CENTRAL PLACE ON MAIN DISPLAY PANEL
D
TERMINAL OPENED
S53
ALIGNMENT DIRECTION OF THREE SCREENS?
LENGTHWISE THREE SCREENS
S55
DISPLAY THREE SCREENS BY ENLARGING MAP OF THE SAME REGION INCLUDING THE CENTRAL PLACE
S56
HAS THE DISPLAY MODE BEEN CHANGED?
CHANGED
UNCHANGED
D
E
CROSSWISE THREE SCREENS
S57
DETECT THE ALIGNMENT DIRECTION OF THREE SCREENS
S58
DISPLAY MAP INCLUDING THE CENTRAL PLACE ON FIRST SUB DISPLAY PANEL
S59
DISPLAY MAP OF ONE OF ADJACENT REGIONS OF THE MAP DISPLAYED ON FIRST SUB DISPLAY, ON MAIN DISPLAY PANEL
S60
DISPLAY MAP OF THE OTHER ADJACENT REGION OF THE MAP DISPLAYED ON FIRST SUB DISPLAY, ON SECOND SUB DISPLAY PANEL
S61
HAS THE DISPLAY MODE BEEN CHANGED?
CHANGED
UNCHANGED
D
E

FIG. 56

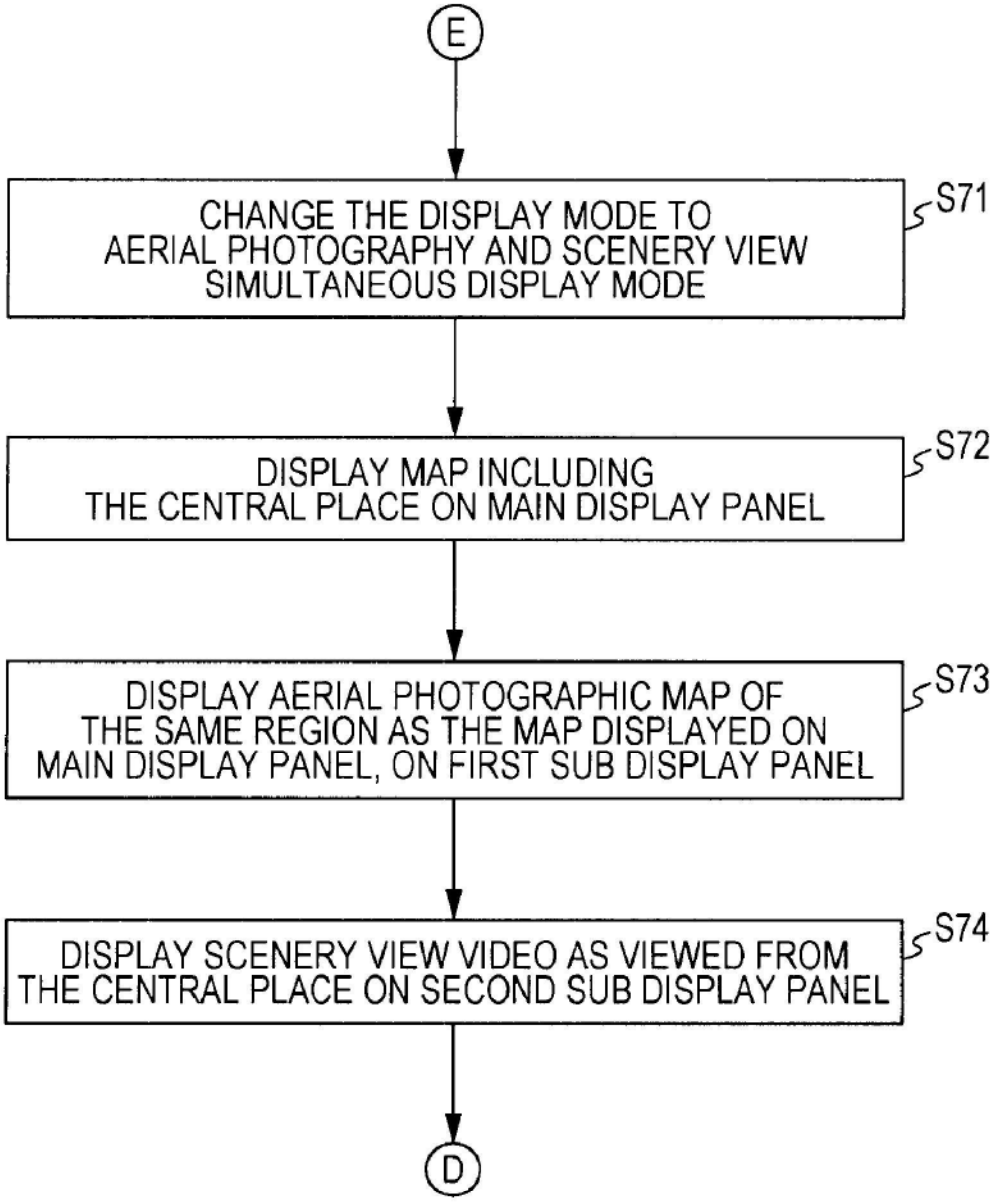
E
CHANGE THE DISPLAY MODE TO AERIAL PHOTOGRAPHY AND SCENERY VIEW SIMULTANEOUS DISPLAY MODE
S71
DISPLAY MAP INCLUDING THE CENTRAL PLACE ON MAIN DISPLAY PANEL
S72
DISPLAY AERIAL PHOTOGRAPHIC MAP OF THE SAME REGION AS THE MAP DISPLAYED ON MAIN DISPLAY PANEL, ON FIRST SUB DISPLAY PANEL
S73
DISPLAY SCENERY VIEW VIDEO AS VIEWED FROM THE CENTRAL PLACE ON SECOND SUB DISPLAY PANEL
S74
D

FIG. 57

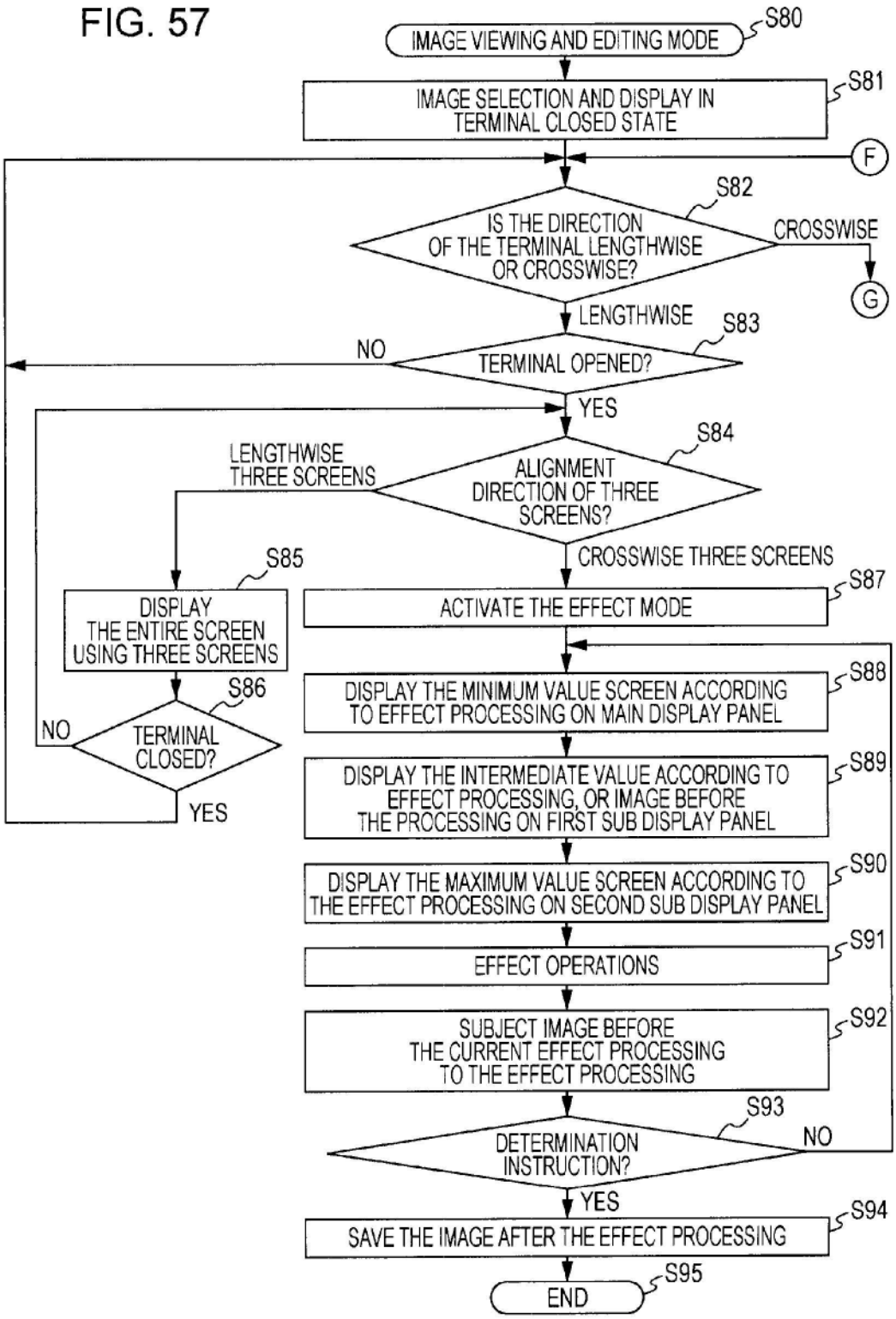
IMAGE VIEWING AND EDITING MODE
S80
IMAGE SELECTION AND DISPLAY IN TERMINAL CLOSED STATE
S81
F
IS THE DIRECTION OF THE TERMINAL LENGTHWISE OR CROSSWISE?
S82
CROSSWISE
G
LENGTHWISE
TERMINAL OPENED?
S83
NO
YES
ALIGNMENT DIRECTION OF THREE SCREENS?
S84
LENGTHWISE THREE SCREENS
CROSSWISE THREE SCREENS
DISPLAY THE ENTIRE SCREEN USING THREE SCREENS
S85
TERMINAL CLOSED?
S86
NO
YES
ACTIVATE THE EFFECT MODE
S87
DISPLAY THE MINIMUM VALUE SCREEN ACCORDING TO EFFECT PROCESSING ON MAIN DISPLAY PANEL
S88
DISPLAY THE INTERMEDIATE VALUE ACCORDING TO EFFECT PROCESSING, OR IMAGE BEFORE THE PROCESSING ON FIRST SUB DISPLAY PANEL
S89
DISPLAY THE MAXIMUM VALUE SCREEN ACCORDING TO THE EFFECT PROCESSING ON SECOND SUB DISPLAY PANEL
S90
EFFECT OPERATIONS
S91
SUBJECT IMAGE BEFORE THE CURRENT EFFECT PROCESSING TO THE EFFECT PROCESSING
S92
DETERMINATION INSTRUCTION?
S93
NO
YES
SAVE THE IMAGE AFTER THE EFFECT PROCESSING
S94
END
S95

FIG. 58

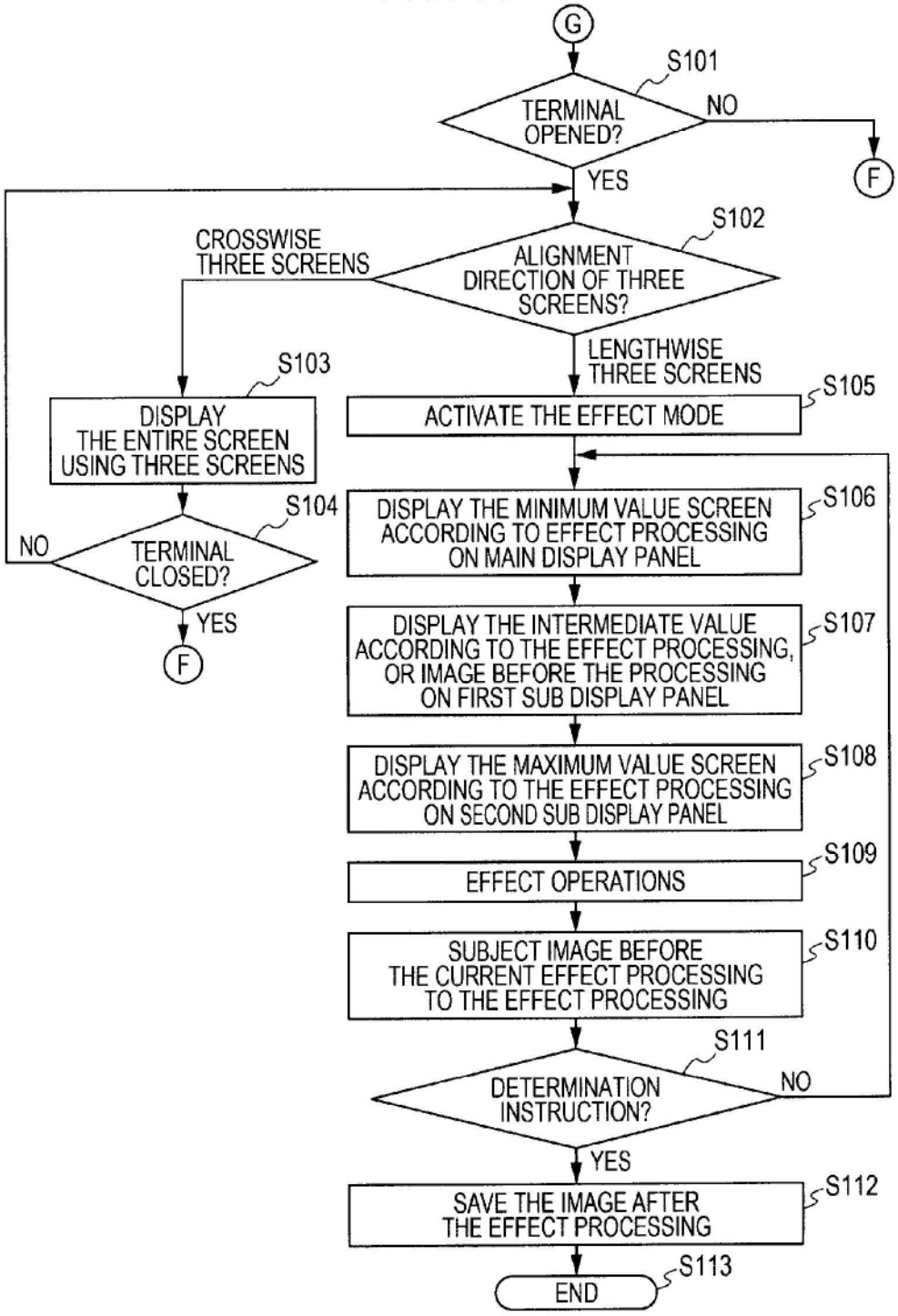
G
S101
TERMINAL OPENED?
NO
F
YES
S102
CROSSWISE THREE SCREENS
ALIGNMENT DIRECTION OF THREE SCREENS?
LENGTHWISE THREE SCREENS
S103
DISPLAY THE ENTIRE SCREEN USING THREE SCREENS
S105
ACTIVATE THE EFFECT MODE
S104
NO
TERMINAL CLOSED?
YES
F
S106
DISPLAY THE MINIMUM VALUE SCREEN ACCORDING TO EFFECT PROCESSING ON MAIN DISPLAY PANEL
S107
DISPLAY THE INTERMEDIATE VALUE ACCORDING TO THE EFFECT PROCESSING, OR IMAGE BEFORE THE PROCESSING ON FIRST SUB DISPLAY PANEL
S108
DISPLAY THE MAXIMUM VALUE SCREEN ACCORDING TO THE EFFECT PROCESSING ON SECOND SUB DISPLAY PANEL
S109
EFFECT OPERATIONS
S110
SUBJECT IMAGE BEFORE THE CURRENT EFFECT PROCESSING TO THE EFFECT PROCESSING
S111
DETERMINATION INSTRUCTION?
NO
YES
S112
SAVE THE IMAGE AFTER THE EFFECT PROCESSING
S113
END

FIG. 59

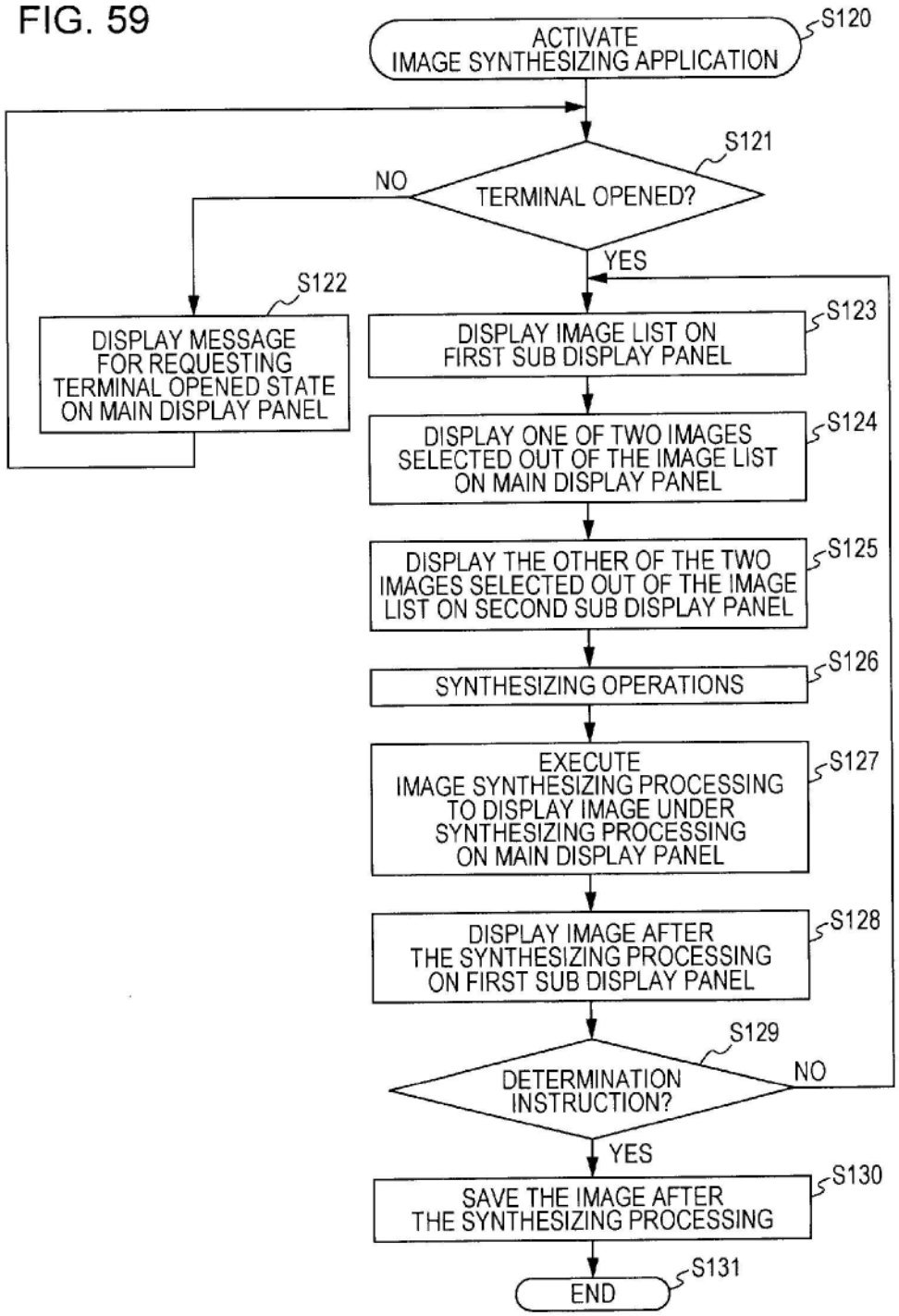
ACTIVATE IMAGE SYNTHESIZING APPLICATION
S120
TERMINAL OPENED?
S121
NO
YES
DISPLAY MESSAGE FOR REQUESTING TERMINAL OPENED STATE ON MAIN DISPLAY PANEL
S122
DISPLAY IMAGE LIST ON FIRST SUB DISPLAY PANEL
S123
DISPLAY ONE OF TWO IMAGES SELECTED OUT OF THE IMAGE LIST ON MAIN DISPLAY PANEL
S124
DISPLAY THE OTHER OF THE TWO IMAGES SELECTED OUT OF THE IMAGE LIST ON SECOND SUB DISPLAY PANEL
S125
SYNTHESIZING OPERATIONS
S126
EXECUTE IMAGE SYNTHESIZING PROCESSING TO DISPLAY IMAGE UNDER SYNTHESIZING PROCESSING ON MAIN DISPLAY PANEL
S127
DISPLAY IMAGE AFTER THE SYNTHESIZING PROCESSING ON FIRST SUB DISPLAY PANEL
S128
DETERMINATION INSTRUCTION?
S129
NO
YES
SAVE THE IMAGE AFTER THE SYNTHESIZING PROCESSING
S130
END
S131

FIG. 60

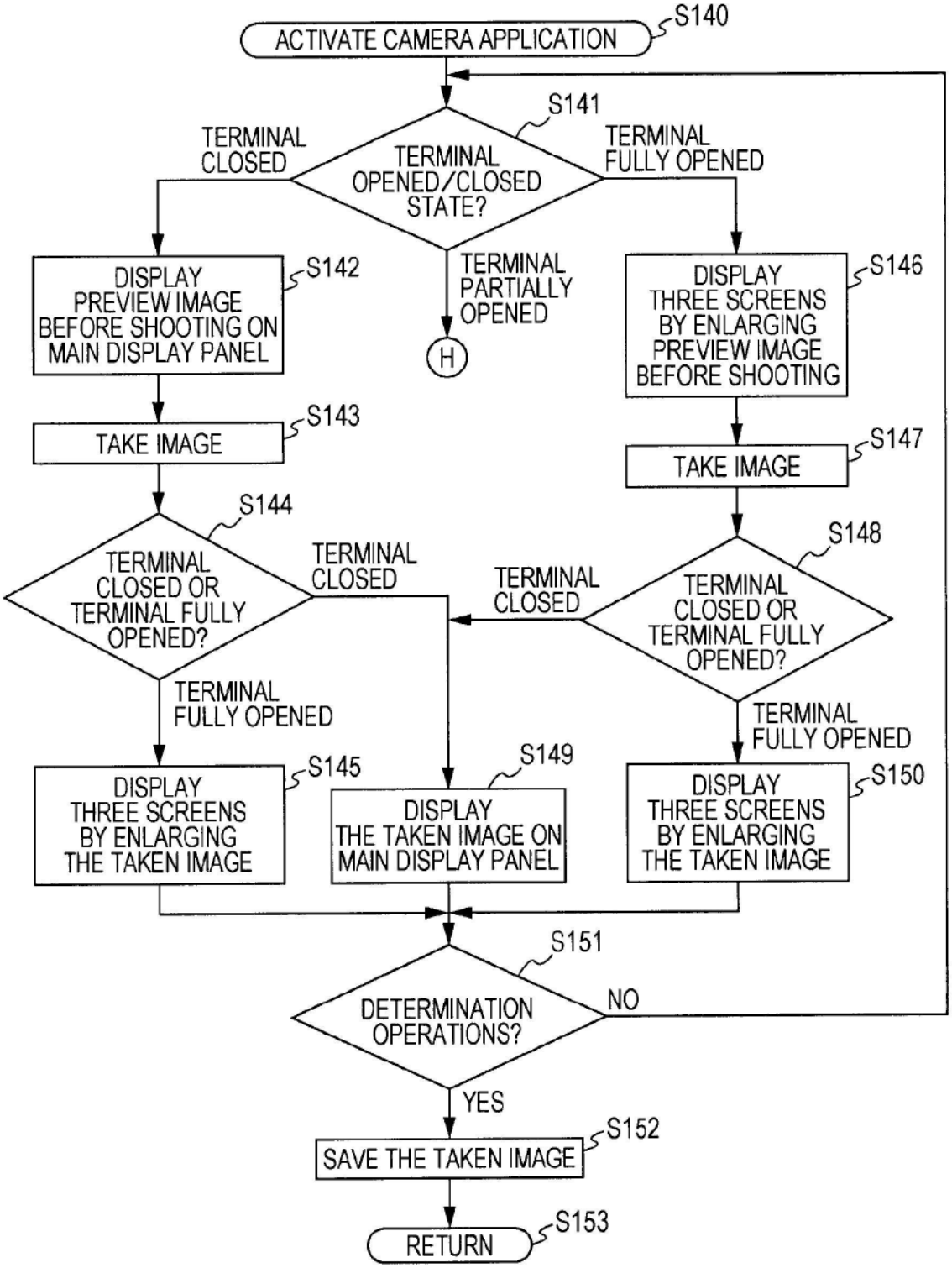
ACTIVATE CAMERA APPLICATION
S140
S141
TERMINAL OPENED/CLOSED STATE?
TERMINAL CLOSED
TERMINAL FULLY OPENED
TERMINAL PARTIALLY OPENED
H
DISPLAY PREVIEW IMAGE BEFORE SHOOTING ON MAIN DISPLAY PANEL
S142
TAKE IMAGE
S143
S144
TERMINAL CLOSED OR TERMINAL FULLY OPENED?
TERMINAL CLOSED
TERMINAL FULLY OPENED
DISPLAY THREE SCREENS BY ENLARGING THE TAKEN IMAGE
S145
DISPLAY THE TAKEN IMAGE ON MAIN DISPLAY PANEL
S149
DISPLAY THREE SCREENS BY ENLARGING PREVIEW IMAGE BEFORE SHOOTING
S146
TAKE IMAGE
S147
S148
TERMINAL CLOSED OR TERMINAL FULLY OPENED?
TERMINAL CLOSED
TERMINAL FULLY OPENED
DISPLAY THREE SCREENS BY ENLARGING THE TAKEN IMAGE
S150
S151
DETERMINATION OPERATIONS?
NO
YES
SAVE THE TAKEN IMAGE
S152
RETURN
S153

FIG. 61

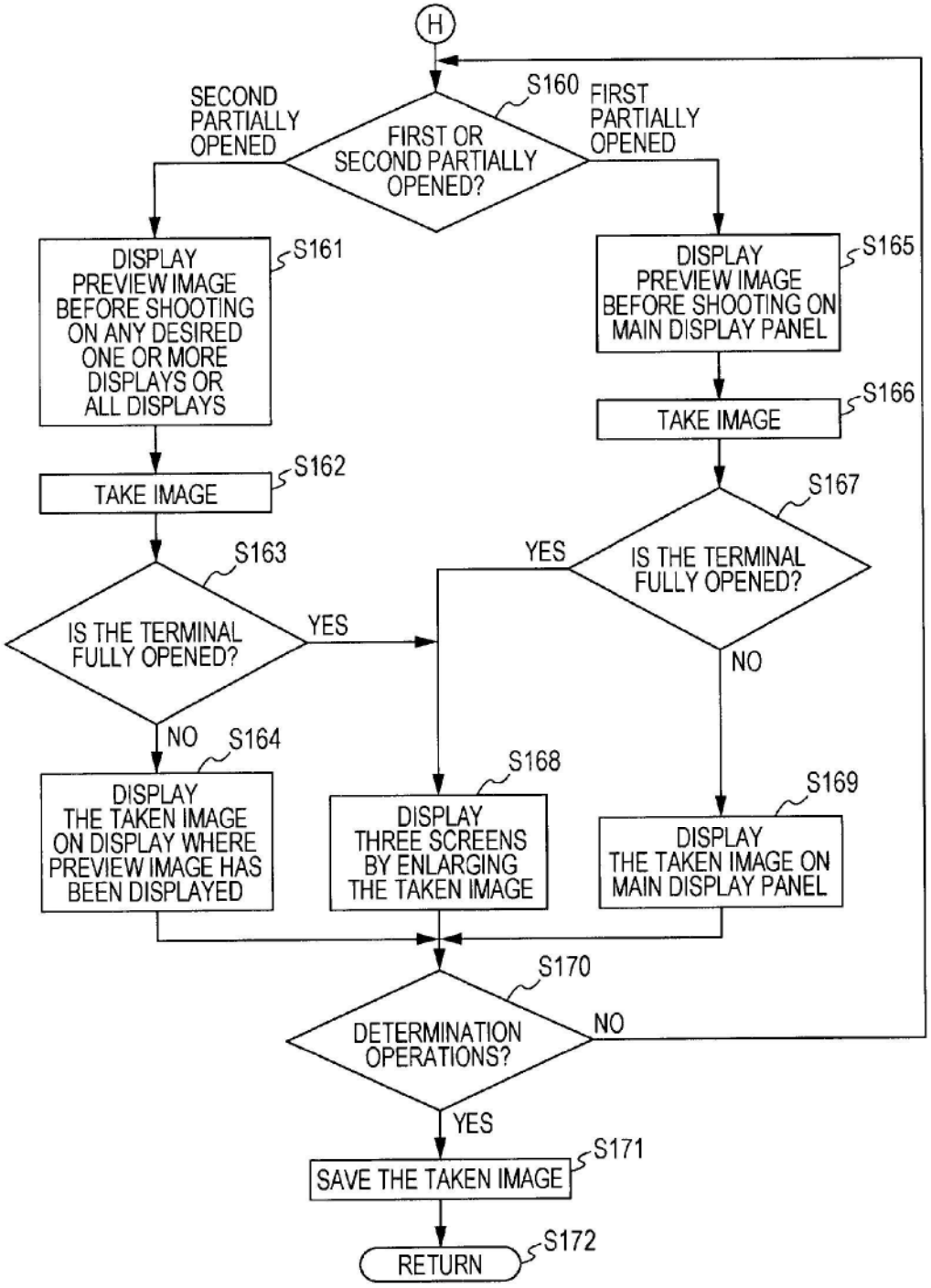
H
S160
FIRST OR SECOND PARTIALLY OPENED?
SECOND PARTIALLY OPENED
FIRST PARTIALLY OPENED
S161
DISPLAY PREVIEW IMAGE BEFORE SHOOTING ON ANY DESIRED ONE OR MORE DISPLAYS OR ALL DISPLAYS
S165
DISPLAY PREVIEW IMAGE BEFORE SHOOTING ON MAIN DISPLAY PANEL
S166
TAKE IMAGE
S162
TAKE IMAGE
S167
IS THE TERMINAL FULLY OPENED?
YES
NO
S163
IS THE TERMINAL FULLY OPENED?
YES
NO
S164
DISPLAY THE TAKEN IMAGE ON DISPLAY WHERE PREVIEW IMAGE HAS BEEN DISPLAYED
S168
DISPLAY THREE SCREENS BY ENLARGING THE TAKEN IMAGE
S169
DISPLAY THE TAKEN IMAGE ON MAIN DISPLAY PANEL
S170
DETERMINATION OPERATIONS?
NO
YES
S171
SAVE THE TAKEN IMAGE
S172
RETURN

FIG. 62

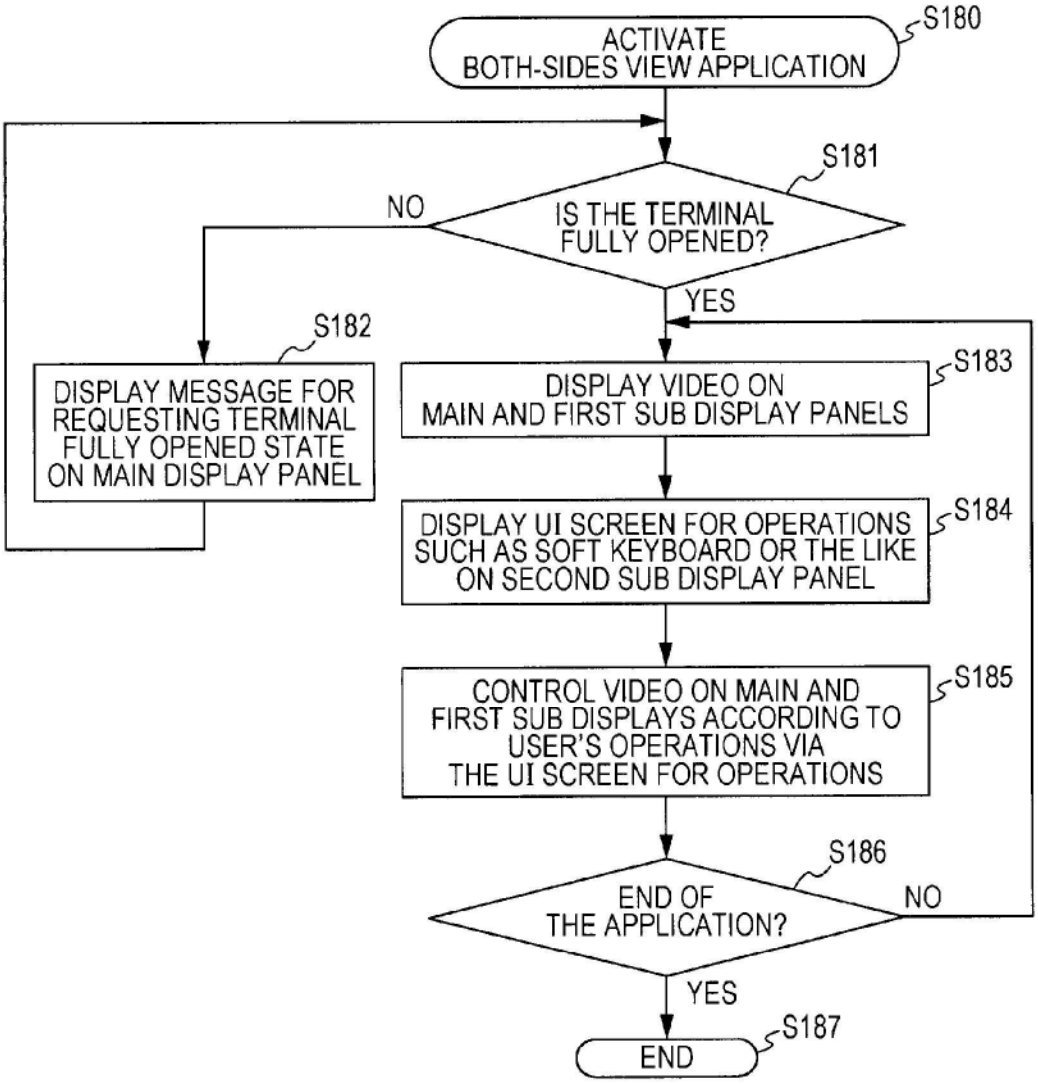
ACTIVATE BOTH-SIDES VIEW APPLICATION
S180
S181
IS THE TERMINAL FULLY OPENED?
NO
YES
S182
DISPLAY MESSAGE FOR REQUESTING TERMINAL FULLY OPENED STATE ON MAIN DISPLAY PANEL
S183
DISPLAY VIDEO ON MAIN AND FIRST SUB DISPLAY PANELS
S184
DISPLAY UI SCREEN FOR OPERATIONS SUCH AS SOFT KEYBOARD OR THE LIKE ON SECOND SUB DISPLAY PANEL
S185
CONTROL VIDEO ON MAIN AND FIRST SUB DISPLAYS ACCORDING TO USER'S OPERATIONS VIA THE UI SCREEN FOR OPERATIONS
S186
END OF THE APPLICATION?
NO
YES
S187
END

FIG. 63

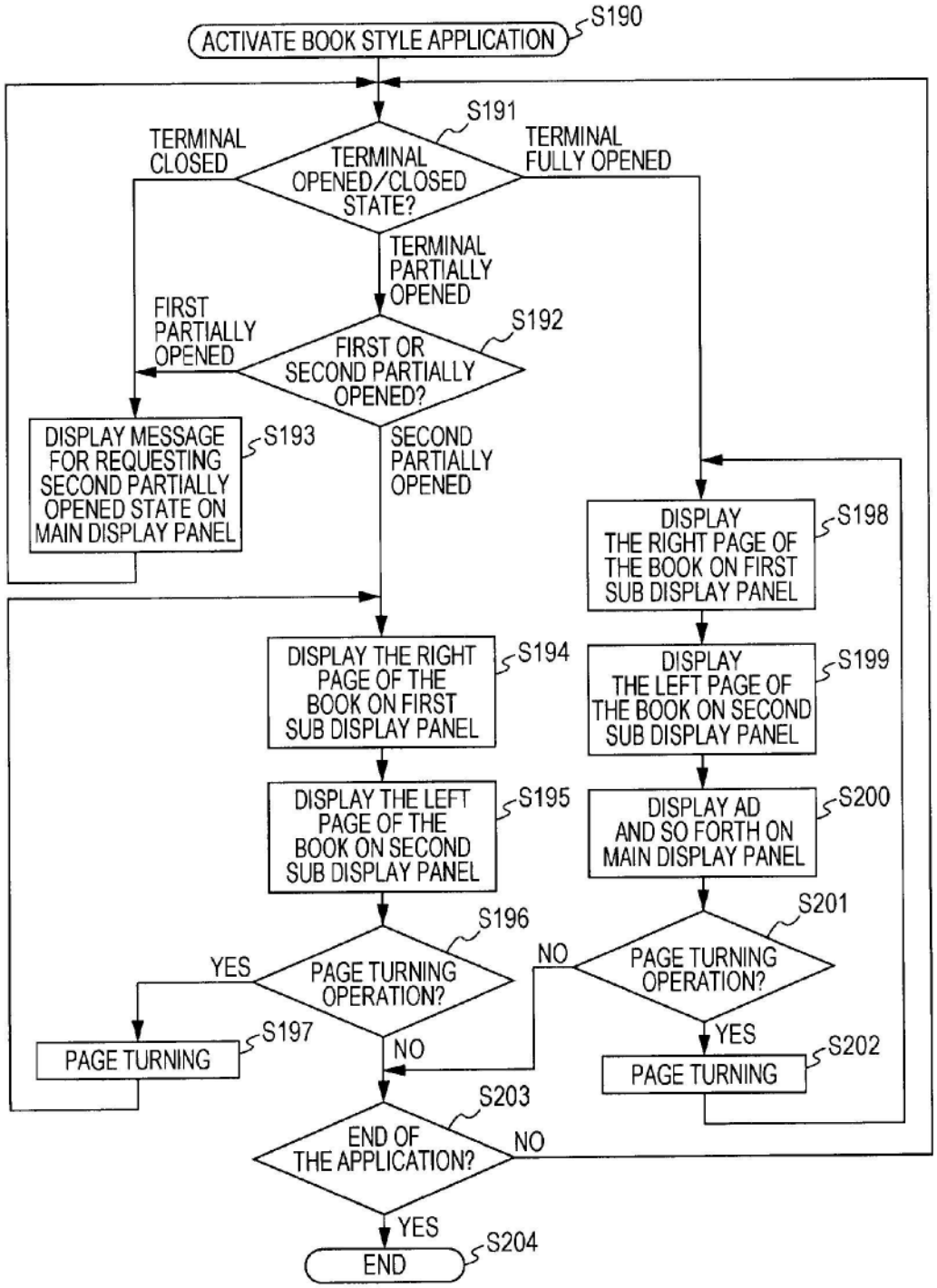
ACTIVATE BOOK STYLE APPLICATION
S190
S191
TERMINAL OPENED/CLOSED STATE?
TERMINAL CLOSED
TERMINAL FULLY OPENED
TERMINAL PARTIALLY OPENED
S192
FIRST OR SECOND PARTIALLY OPENED?
FIRST PARTIALLY OPENED
SECOND PARTIALLY OPENED
S193
DISPLAY MESSAGE FOR REQUESTING SECOND PARTIALLY OPENED STATE ON MAIN DISPLAY PANEL
S194
DISPLAY THE RIGHT PAGE OF THE BOOK ON FIRST SUB DISPLAY PANEL
S195
DISPLAY THE LEFT PAGE OF THE BOOK ON SECOND SUB DISPLAY PANEL
S196
PAGE TURNING OPERATION?
YES
NO
S197
PAGE TURNING
S198
DISPLAY THE RIGHT PAGE OF THE BOOK ON FIRST SUB DISPLAY PANEL
S199
DISPLAY THE LEFT PAGE OF THE BOOK ON SECOND SUB DISPLAY PANEL
S200
DISPLAY AD AND SO FORTH ON MAIN DISPLAY PANEL
S201
PAGE TURNING OPERATION?
NO
YES
S202
PAGE TURNING
S203
END OF THE APPLICATION?
NO
YES
S204
END

FIG. 64

	E1	E2	E3	E4	E5	E6	E7	E8	E9	E10	E11
THREE-SCREEN-FOLDING-TYPE PERSONAL DIGITAL ASSISTANT	Y	Y	Y	Y *1.78	Y	Y	Y	Y	Y	Y	Y
THREE-SCREEN-SLIDE-TYPE PERSONAL DIGITAL ASSISTANT	Y	Y	Y	Y *1.78	P	Y	Y	Y	Y	Y	N
THREE-SCREEN-DOUBLE-DOORS TERMINAL	Y	Y	N	—	N	N	N	Y	Y	N	P
THREE-SCREEN-INVERSE-DOUBLE-DOORS TERMINAL	Y	Y	Y	Y *1.78	P	N	Y	Y	N	N	P
9.7-INCH TOUCH PANEL TERMINAL	Y	N	N	—	N	—	—	Y	—	Y	N
3.5-INCH TOUCH PANEL TERMINAL	N	Y	Y	—	N	—	—	Y	—	Y	N
TWO-SCREEN-FOLDING TERMINAL	Y	Y	N	—	N	Y	N	Y	Y	Y	P
TWO-SCREEN-SLIDE TERMINAL	Y	Y	Y	N *1.1	N	Y	Y	Y	Y	Y	N
TWO-SCREEN-INVERSE-FOLDING TERMINAL	Y	Y	Y	N *1.1	N	Y	Y	Y	N	Y	P
FOUR-SCREEN-FOLDING TERMINAL	Y	Y	Y	Y *2	N	N	Y	N	N	P	P
TWO-SCREEN-SLIDE + THREE-SCREEN-FOLDING TERMINAL	Y	Y	Y	Y *2	N	N	Y	N	Y	P	P
FOUR-SCREEN SLIDE TERMINAL	Y	Y	Y	Y *2	N	N	Y	N	Y	P	N