US007996045B1

(12) **United States Patent**
Bauer et al.

(10) **Patent No.: US 7,996,045 B1**
(45) **Date of Patent: Aug. 9, 2011**

(54) **PROVIDING INTERACTIVE ALERT INFORMATION**

(75) Inventors: **German W. Bauer**, San Jose, CA (US); **Michael A. Cleron**, Menlo Park, CA (US)

(73) Assignee: **Google Inc.**, Mountain View, CA (US)

(*) Notice: Subject to any disclaimer, the term of this patent is extended or adjusted under 35 U.S.C. 154(b) by 770 days.

(21) Appl. No.: **11/938,134**

(22) Filed: **Nov. 9, 2007**

(51) **Int. Cl.**
H04B 1/00 (2006.01)

(52) **U.S. Cl.** **455/566**; 455/550.1; 455/466; 455/556.1; 715/700; 715/701; 715/702; 715/764; 715/790

(58) **Field of Classification Search** 455/466, 455/550.1, 556.1, 566, 56; 345/173–178; 715/700–702, 752, 772, 764, 783–788, 790–793, 715/831, 841–845, 863, 864, 866
See application file for complete search history.

(56) **References Cited**

U.S. PATENT DOCUMENTS

5,565,888 A * 10/1996 Selker 715/823
5,736,974 A * 4/1998 Selker 715/862
7,250,955 B1 * 7/2007 Beeman et al. 345/592
2005/0120306 A1 * 6/2005 Klassen et al. 715/765
2005/0188320 A1 * 8/2005 Bocking 715/752
2006/0101350 A1 * 5/2006 Scott 715/779
2008/0008239 A1 * 1/2008 Song 375/240.12
2008/0040693 A1 * 2/2008 Toyama et al. 715/865
2008/0307305 A1 * 12/2008 Klassen et al. 715/700
2009/0006570 A1 * 1/2009 Forstall et al. 709/206
2009/0069038 A1 * 3/2009 Olague et al. 455/466

OTHER PUBLICATIONS

Southern Oregon University, Windows XP—File Management, 6 pages, Sep. 21, 2006, accessed online from http://www.sou.edu/it/howtodocs/winxp/xpwinexplorer.shtml?print_version, Jun. 5, 2008.
University of Wyoming, Microsoft Outlook E-Mail Notification, 4 pages, Jul. 2005, accessed online from http://uwadmnweb.uwyo.edu/cessupport/Microsoft/Outlook/email_notifcation.asp, Jun. 5, 2008.

* cited by examiner

Primary Examiner — Edward Urban
Assistant Examiner — Fayyaz Alam
(74) *Attorney, Agent, or Firm* — Fish & Richardson P.C.

(57) **ABSTRACT**

In some implementations, a computer-implemented method of displaying alert information with a mobile communication device includes displaying device status indicators to a user of a mobile device in a status area; receiving information from an application to display an alert in the status area; displaying in the status area a first level of information for the alert and a user-selectable control; and displaying, in response to a selection of the user-selectable control, a second level of information for the alert that provides greater detail than the first level of information.

25 Claims, 12 Drawing Sheets

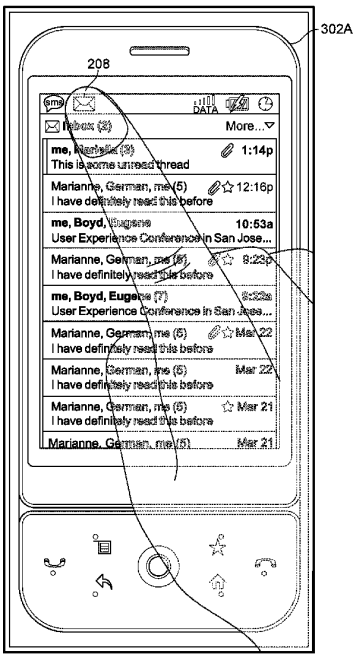

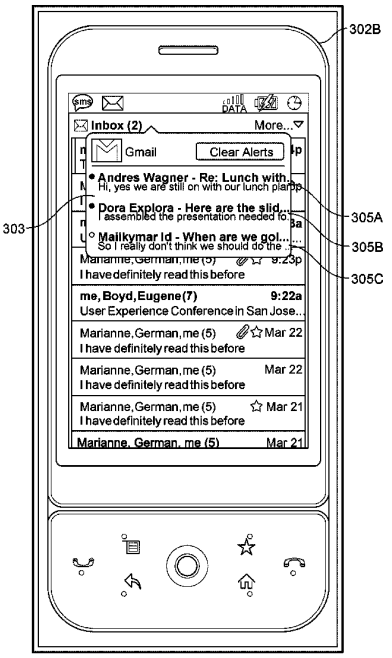

GOOGLE EXHIBIT 1007

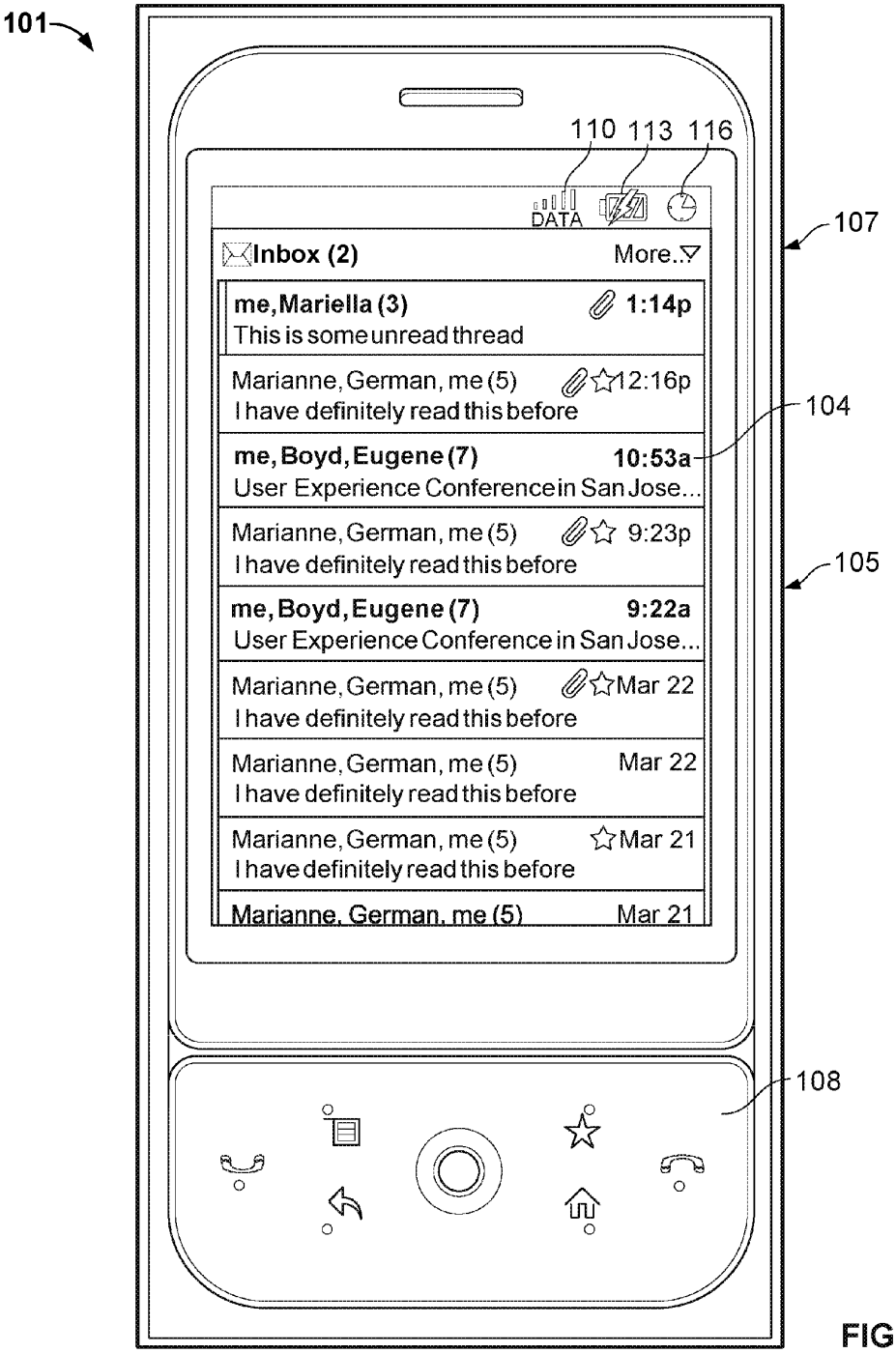
101
110
113
116
DATA
107
Inbox (2)
More..
me, Mariella (3)
1:14p
This is some unread thread
Marianne, German, me (5)
12:16p
I have definitely read this before
104
me, Boyd, Eugene (7)
10:53a
User Experience Conference in San Jose...
Marianne, German, me (5)
9:23p
I have definitely read this before
105
me, Boyd, Eugene (7)
9:22a
User Experience Conference in San Jose...
Marianne, German, me (5)
Mar 22
I have definitely read this before
Marianne, German, me (5)
Mar 22
I have definitely read this before
Marianne, German, me (5)
Mar 21
I have definitely read this before
Marianne, German, me (5)
Mar 21
108

FIG. 1

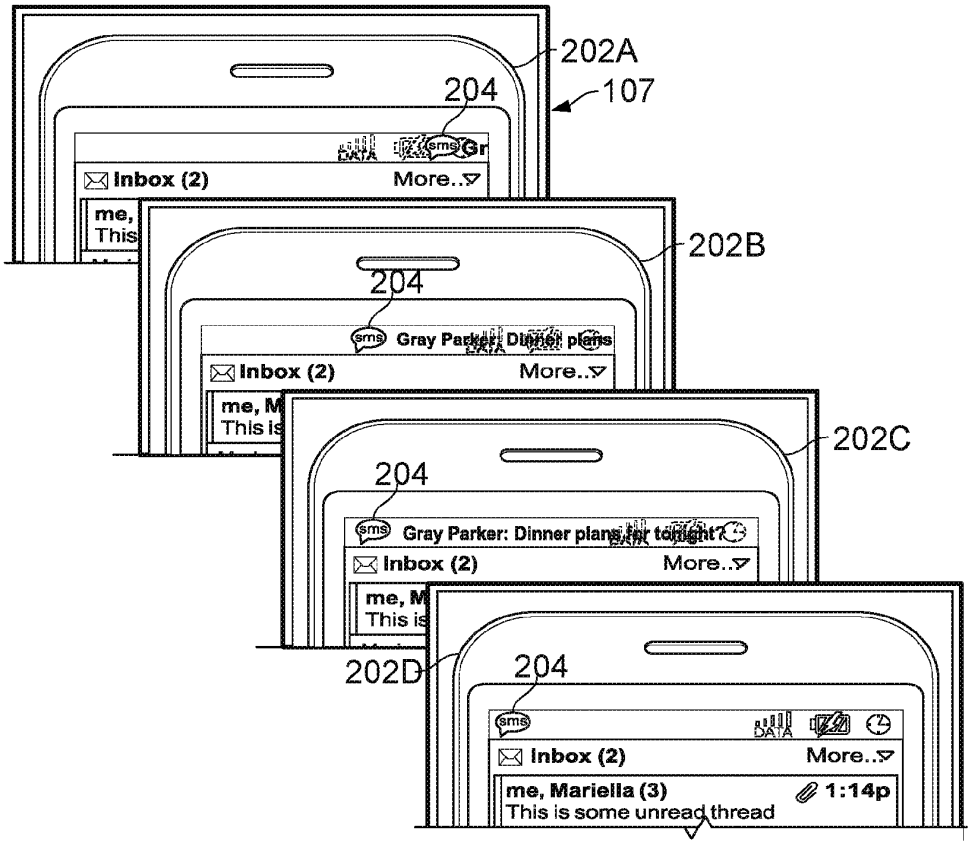
202A
107
204
Inbox (2)
More..
202B
204
Gray Parker: Dinner plans
Inbox (2)
More..
202C
204
Gray Parker: Dinner plans for tonight?
Inbox (2)
More..
202D
204
Inbox (2)
More..
me, Mariella (3)
1:14p
This is some unread thread

FIG. 2A

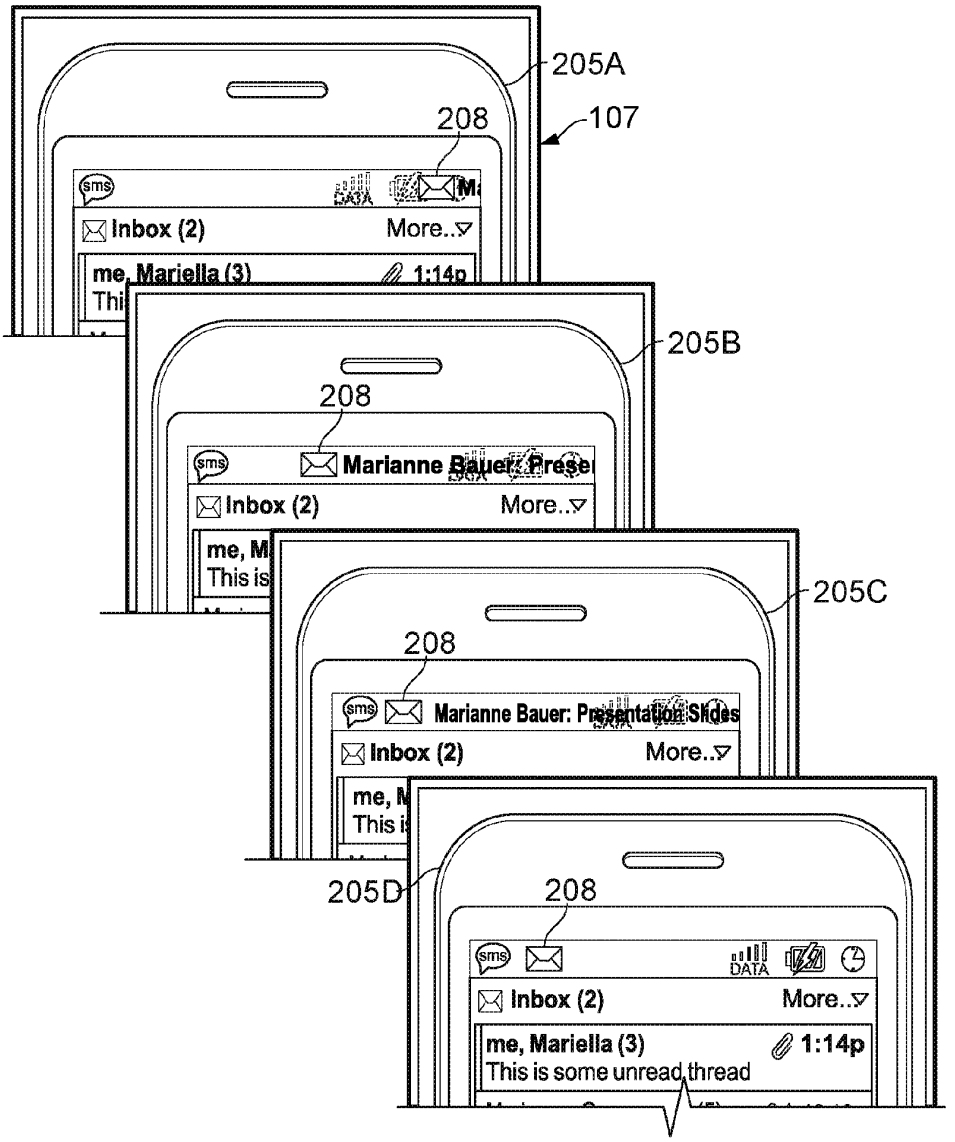
205A
107
208
sms
Inbox (2)
More..
me, Mariella (3)
1:14p
205B
208
Marianne Bauer: Prese
Inbox (2)
More..
205C
208
Marianne Bauer: Presentation Slides
Inbox (2)
More..
205D
208
sms
DATA
Inbox (2)
More..
me, Mariella (3)
1:14p
This is some unread thread

FIG. 2B

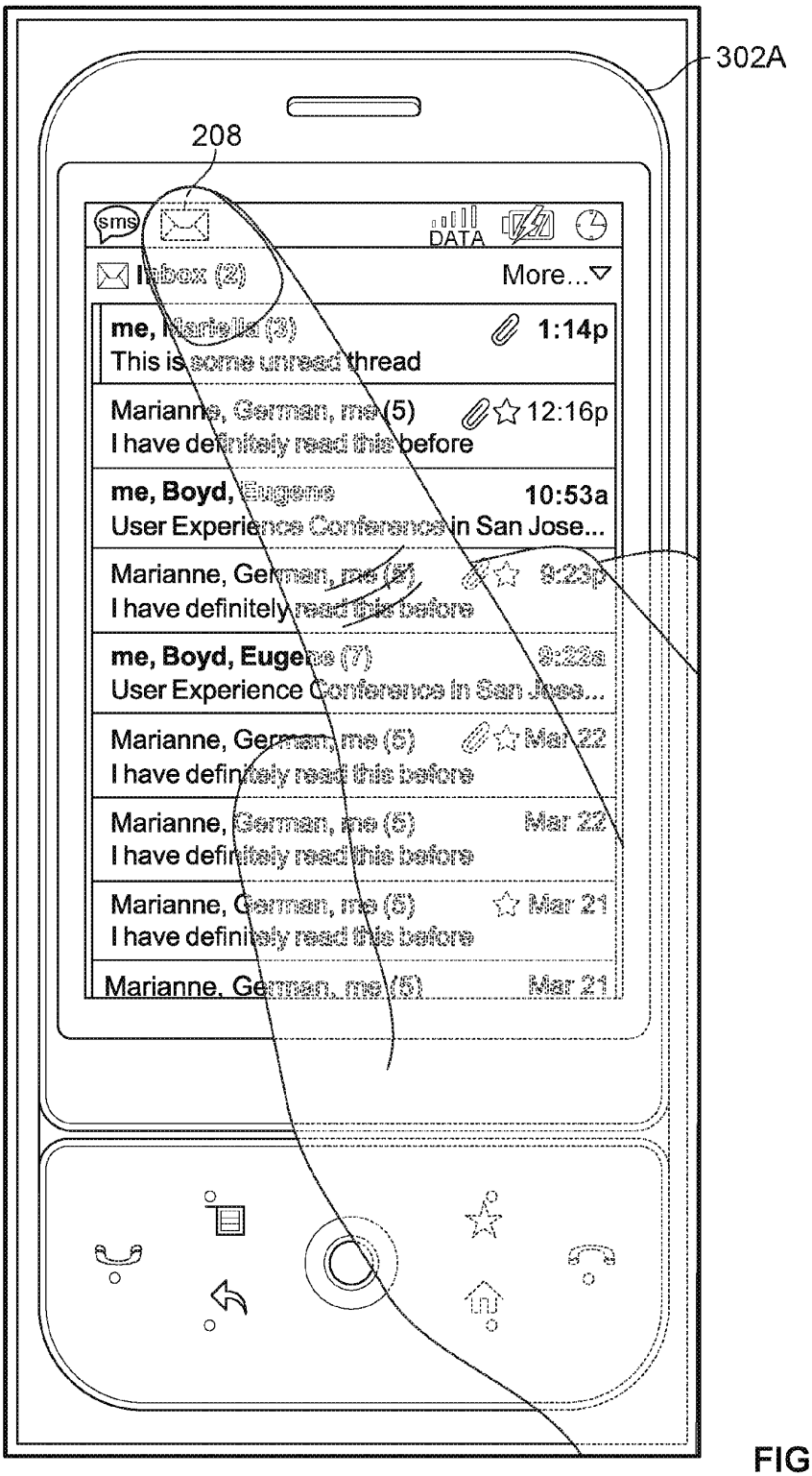
302A
208
sms
DATA
Inbox (2)
More...
me, Mariella (3)
1:14p
This is some unread thread
Marianne, German, me (5)
12:16p
I have definitely read this before
me, Boyd, Eugene
10:53a
User Experience Conference in San Jose...
Marianne, German, me (5)
9:23p
I have definitely read this before
me, Boyd, Eugene (7)
9:22a
User Experience Conference in San Jose...
Marianne, German, me (5)
Mar 22
I have definitely read this before
Marianne, German, me (5)
Mar 22
I have definitely read this before
Marianne, German, me (5)
Mar 21
I have definitely read this before
Marianne, German, me (5)
Mar 21

FIG. 3A

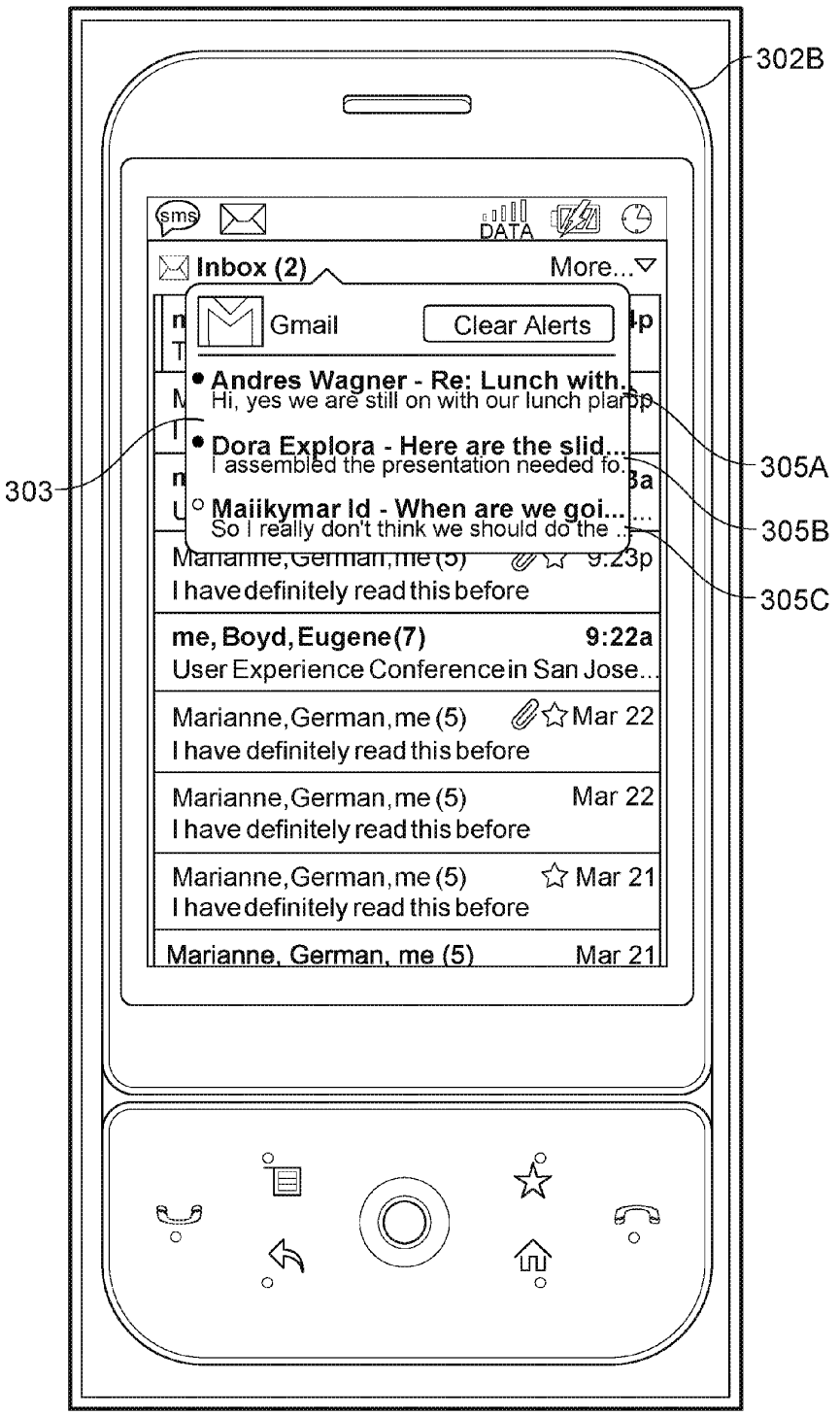
302B
sms
DATA
Inbox (2)
More...
Gmail
Clear Alerts
Andres Wagner - Re: Lunch with...
Hi, yes we are still on with our lunch plans
Dora Explora - Here are the slid...
I assembled the presentation needed fo...
Maiikymar Id - When are we goi...
So I really don't think we should do the ...
303
305A
305B
305C
I have definitely read this before
me, Boyd, Eugene (7) 9:22a
User Experience Conference in San Jose...
Marianne, German, me (5) Mar 22
I have definitely read this before
Marianne, German, me (5) Mar 22
I have definitely read this before
Marianne, German, me (5) Mar 21
I have definitely read this before
Marianne, German, me (5) Mar 21

FIG. 3B

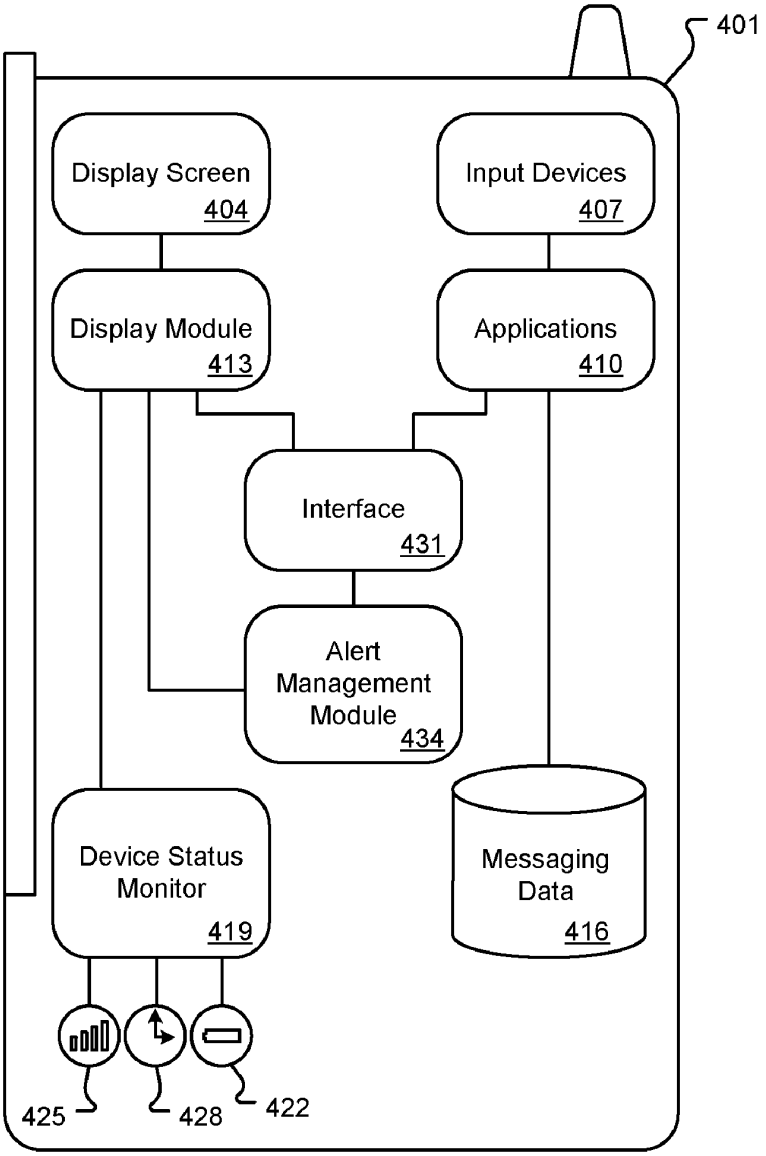
401
Display Screen
404
Input Devices
407
Display Module
413
Applications
410
Interface
431
Alert
Management
Module
434
Device Status
Monitor
419
Messaging
Data
416
425
428
422

FIG. 4

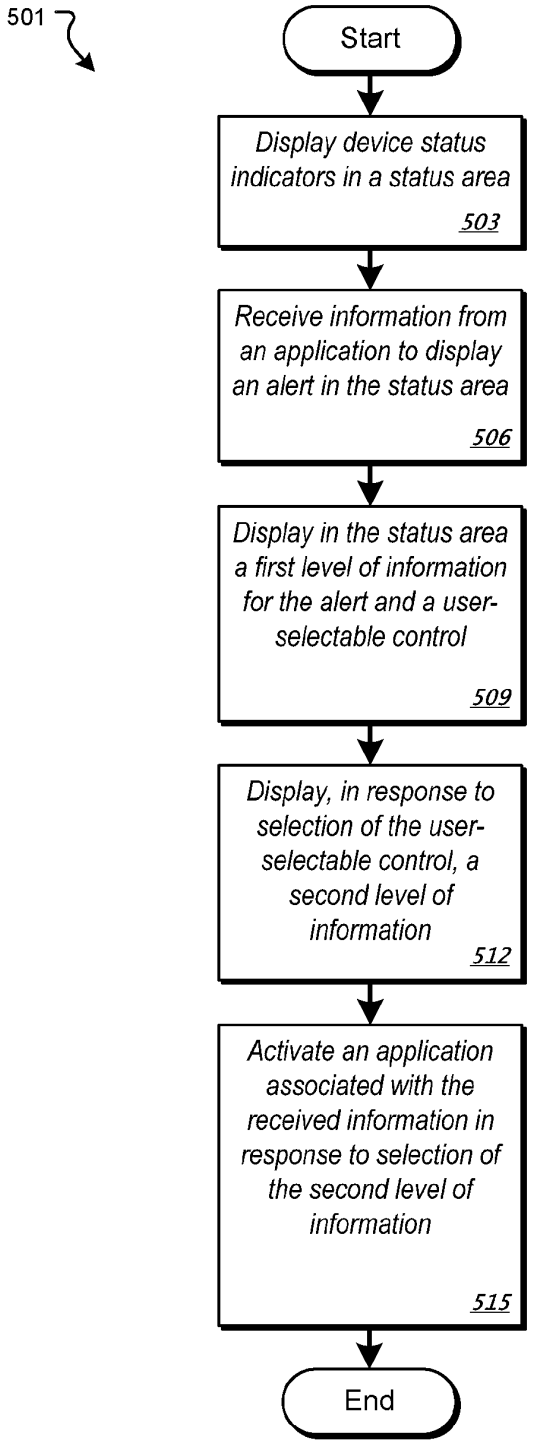
501
Start
Display device status indicators in a status area
503
Receive information from an application to display an alert in the status area
506
Display in the status area a first level of information for the alert and a user-selectable control
509
Display, in response to selection of the user-selectable control, a second level of information
512
Activate an application associated with the received information in response to selection of the second level of information
515
End

FIG. 5

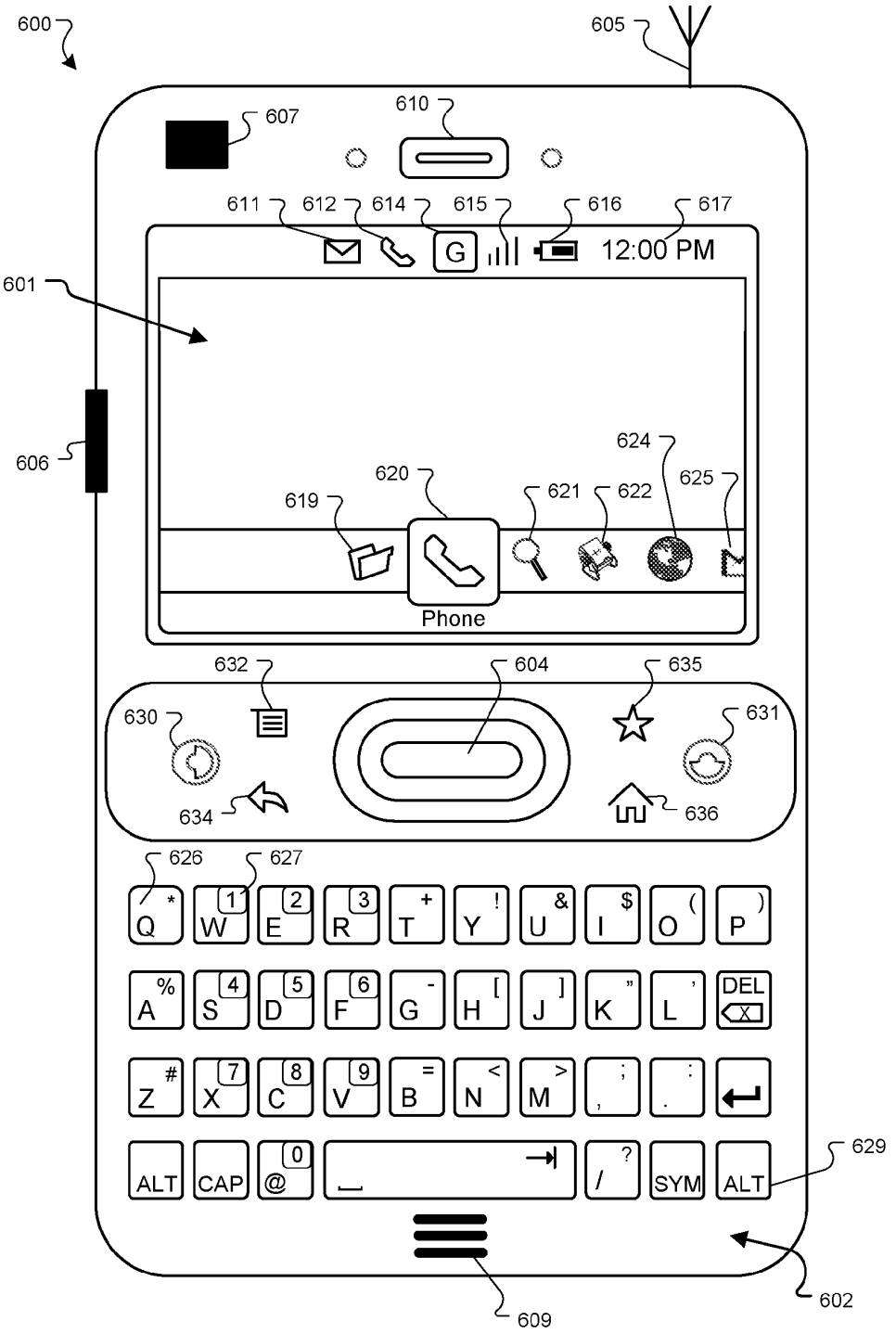
600
605
607
610
611
612
614
615
616
617
12:00 PM
601
606
624
620
625
619
621
622
Phone
632
604
635
630
631
634
636
626
627
629
609
602
ALT
CAP
SYM
DEL

FIG. 6

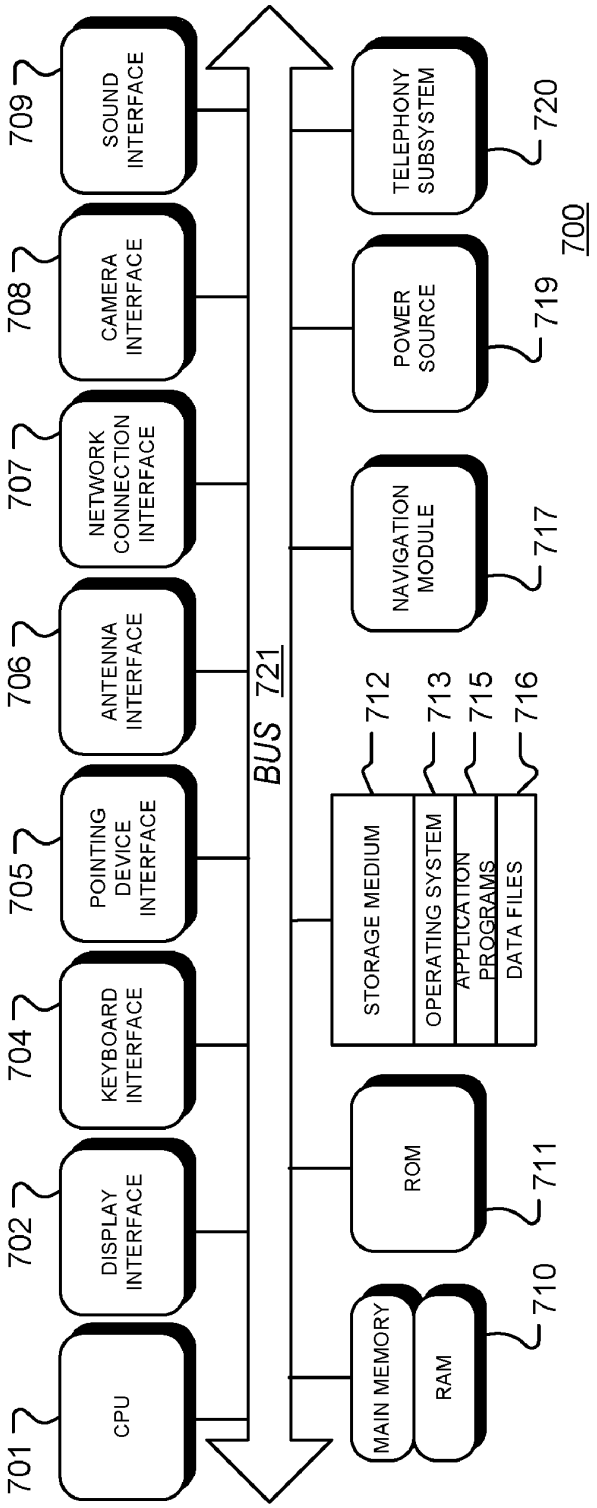
701
CPU
702
DISPLAY INTERFACE
704
KEYBOARD INTERFACE
705
POINTING DEVICE INTERFACE
706
ANTENNA INTERFACE
707
NETWORK CONNECTION INTERFACE
708
CAMERA INTERFACE
709
SOUND INTERFACE
BUS 721
MAIN MEMORY
RAM
710
ROM
711
STORAGE MEDIUM
712
OPERATING SYSTEM
713
APPLICATION PROGRAMS
715
DATA FILES
716
NAVIGATION MODULE
717
POWER SOURCE
719
TELEPHONY SUBSYSTEM
720
700

FIG. 7

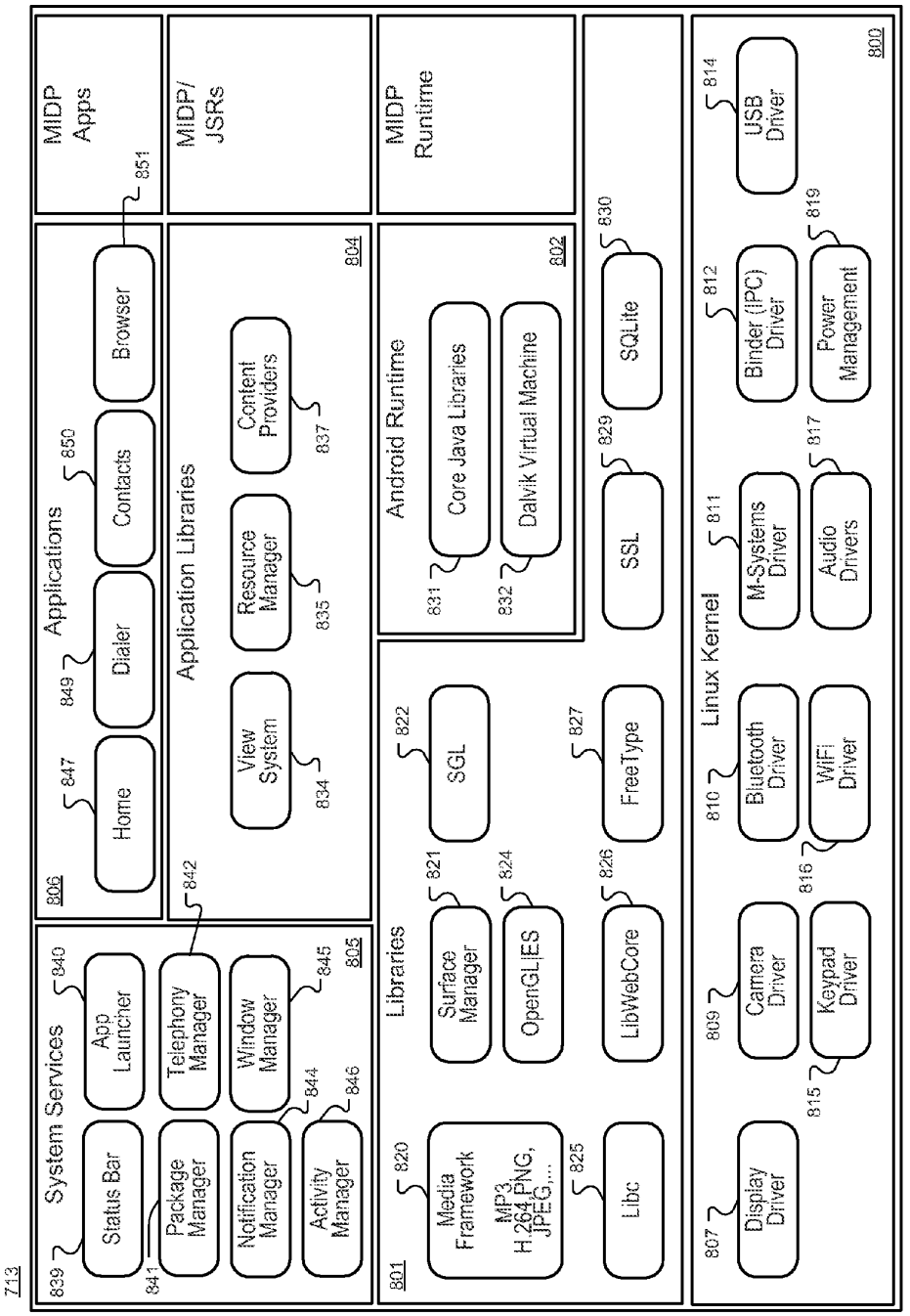
713
MIDP Apps
851
MIDP/ JSRs
MIDP Runtime
806
Applications
Home
847
Dialer
849
Contacts
850
Browser
Application Libraries
804
View System
834
Resource Manager
835
Content Providers
837
842
Android Runtime
802
Core Java Libraries
831
Dalvik Virtual Machine
832
System Services
839
Status Bar
841
App Launcher
840
Package Manager
Telephony Manager
Notification Manager
844
Window Manager
845
Activity Manager
846
805
Libraries
801
Media Framework
MP3, H.264, PNG, JPEG,...
820
Surface Manager
821
OpenGL|ES
824
SGL
822
Libc
825
LibWebCore
826
FreeType
827
SSL
829
SQLite
830
Linux Kernel
800
Display Driver
807
Camera Driver
809
Keypad Driver
815
Bluetooth Driver
810
WiFi Driver
816
M-Systems Driver
811
Audio Drivers
817
Binder (IPC) Driver
812
Power Management
819
USB Driver
814

FIG. 8

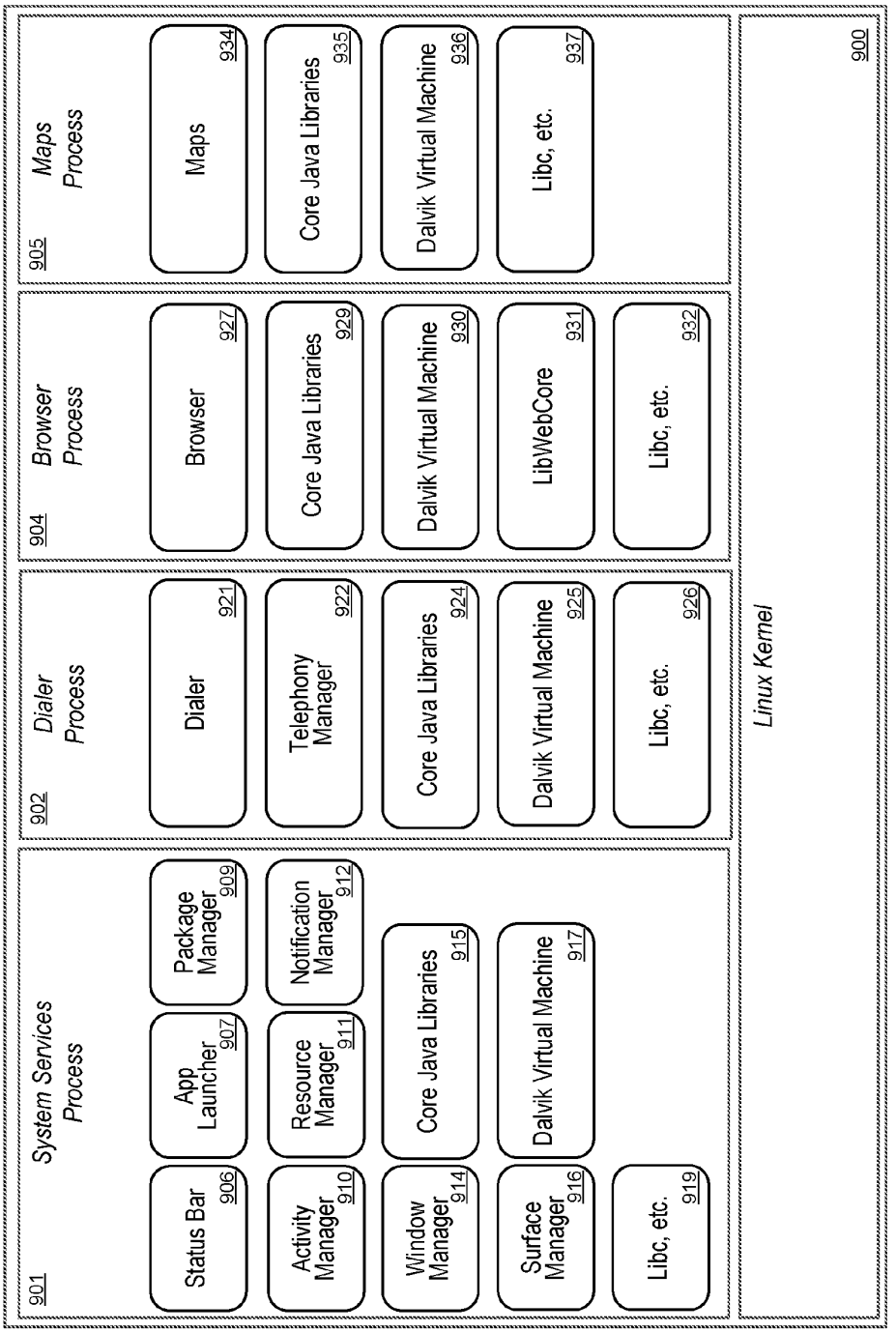
901
System Services Process
Status Bar 906
App Launcher 907
Package Manager 909
Activity Manager 910
Resource Manager 911
Notification Manager 912
Window Manager 914
Core Java Libraries 915
Surface Manager 916
Dalvik Virtual Machine 917
Libc, etc. 919
902
Dialer Process
Dialer 921
Telephony Manager 922
Core Java Libraries 924
Dalvik Virtual Machine 925
Libc, etc. 926
904
Browser Process
Browser 927
Core Java Libraries 929
Dalvik Virtual Machine 930
LibWebCore 931
Libc, etc. 932
905
Maps Process
Maps 934
Core Java Libraries 935
Dalvik Virtual Machine 936
Libc, etc. 937
Linux Kernel
900

FIG. 9

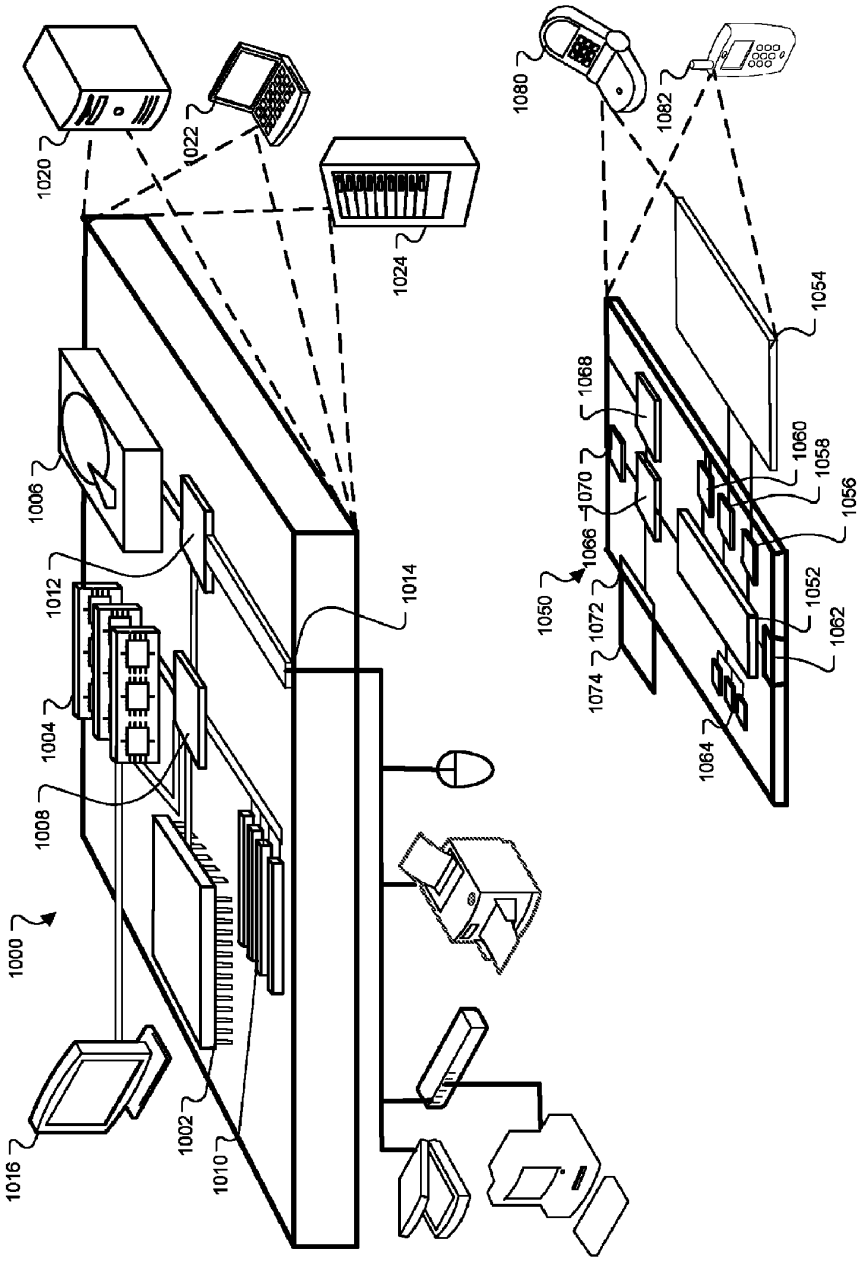
1000
1002
1004
1006
1008
1010
1012
1014
1016
1020
1022
1024
1050
1052
1054
1056
1058
1060
1062
1064
1066
1068
1070
1072
1074
1080
1082

FIG. 10

PROVIDING INTERACTIVE ALERT INFORMATION

TECHNICAL FIELD

This document relates generally to providing interactive alert information, and more particularly, to providing interactive alert information with a mobile computing or communication device.

BACKGROUND

A mobile computing or communication device (e.g., a smartphone, cell phone, personal digital assistant (PDA), etc.) may display status indicators associated with various system resources. For example a device may display a battery-shaped power meter that graphically depicts how much power remains in a battery included in the device; as power is consumed by the device, the power meter may change shape or character (e.g., the power meter may appear less "shaded" or filled-in as power is consumed). As another example, the device may display an antenna-shaped graphic having a number of "bars" that depict a relative strength of a signal that the device is capable of receiving from a corresponding wireless communication network; a stronger signal may be associated with more bars in the antenna graphic, and a weaker signal may be associated with fewer bars in the antenna graphic. As another example, the device may display various icons to depict a mode that the device is in. In particular, a telephone-shaped icon with wavy lines on either side may indicate a courtesy mode; an automobile-shaped icon may indicate a driving mode (e.g., one in which the device is configured to receive voice commands from a user).

SUMMARY

This document describes methods and systems for providing interactive alert information (e.g., interactive indicators or icons) in a device such as a mobile computing or communication device that can provide a user of the device with progressively more information about an event (e.g., the receipt of an email) in response to the user's interaction with the alert information. In particular, for example, multiple levels of detail corresponding to alert information can be provided. The multiple levels of detail can include a first level of information, which can be displayed with an initial interactive alert indicator; a second level of information can be displayed when a user of the device selects the initial interactive alert indicator; a third level of information can be displayed when the user selects the interactive alert indicator a second time (or selects a display of the second level of information). In some implementations, the device provides a mechanism for displaying interactive alert information for any application running on the device.

In some implementations, a computer-implemented method for displaying alert information includes in a mobile smartphone having a touch-sensitive display screen, displaying device status indicators to a user of the smartphone in a status area; receiving information from an application to display an alert in the status area; displaying in the status area a first level of information for the alert and a user-selectable control; displaying, in response to user selection input selecting the user-selectable control, a second level of information for the alert that provides greater detail than the first level of information; and in response to additional user selection input selecting the second level of information, activating an application associated with the received information, wherein the application is focused on a third level of information for the alert that provides greater detail than the first level or second level of information. The user selection input and the additional user selection input can be received through user contact with the touch-sensitive screen.

In some implementations, a computer-implemented method for displaying alert information with a mobile communication device includes displaying device status indicators to a user of a mobile device in a status area; receiving information from an application to display an alert in the status area; displaying in the status area a first level of information for the alert and a user-selectable control; and displaying, in response to a selection of the user-selectable control, a second level of information for the alert that provides greater detail than the first level of information. The second level of information can be displayed in a pop-up box near the user-selectable control.

The computer-implemented method can further include superimposing the first level of information over the device status indicators. Superimposing the first level of information over the device status indicators can include scrolling the first level of information through the status area over the device status indicators. The first level of information can include preview content related to the second level of information. The computer-implemented method can further include removing the preview content after a user review period.

The computer-implemented method can further include increasing a size of the user-selectable control while the user-selectable control is being selected and permitting selection of another user-selectable control by movement of a selector. Increasing the size of the user-selectable control can include increasing the size of the user-selectable control one or more times, to a predetermined maximum size, while the user-selectable control remains selected.

The computer-implemented method can further include activating an application associated with the received information, wherein the application is focused on a third level of information for the alert that provides greater detail than the first level or second level of information. Activating the application can include activating the application in response to a selection of the second level of information.

In some implementations, the first level of information includes a short message service (SMS) snippet, the second level of information includes an SMS message, and the application includes an SMS message manager. In some implementations, the first level of information includes an electronic mail snippet, the second level of information includes an electronic mail message portion that is larger than the snippet, and the application includes an electronic mail application.

In some implementations, a computer-implemented mobile device alert management system includes an interface configured to receive status alert information from applications on a mobile device; an alert management module configured to receive the status alert information from the interface and provide multiple levels of detail of the status alert information; and a display module configured to receive the multiple levels of detail of the status alert information and to display to a user of the mobile device at least a first level of detail of the status alert information in a device display status area of a mobile device.

The alert management module can be configured to initially present the first level of detail of the alert information and to present a second level of detail when selection input is received, the selection input indicating that the first level of detail has been selected. The interface can be configured to activate an application associated with the status alert infor-

mation when additional selection input has been received, the additional selection input indicating that the second level of detail has been selected.

The computer-implemented mobile device alert management can further include a touch-sensitive input device configured to receive the selection input. The interface can be configured to prevent the display module from being directly accessed by the applications. The interface can be configured to receive the status alert information from an application and initiate a protected function call that incorporates at least a portion of the received status alert information, wherein the protected function call is not directly accessible to the applications.

The computer-implemented mobile device alert management system can further comprising a static indicator module configured to display in the status area status information pertaining to the overall operation of the mobile device, wherein the status information includes at least one of an indication of remaining on-board power in the mobile device or an indication of signal strength of a wireless channel over which the mobile device sends and receives information. The display module can be configured to display the alert information in the status area of the mobile device in a manner that is more prominent than the status information during a user-review period.

In some implementations, a computer-implemented mobile device alert management system includes an interface configured to receive status alert information from applications on a mobile device; an alert management means for receiving the status alert information from the interface and providing multiple levels of detail of the status alert information; and a display module configured to receive the multiple levels of detail of the status alert information and to display to a user of the mobile device at least a first level of detail of the status alert information in a device display status area of the mobile device.

The details of one or more implementations are set forth in the accompanying drawings and the description below.

DESCRIPTION OF DRAWINGS

FIG. **1** illustrates an example mobile device that can display interactive indicators.

FIGS. **2**A and **2**B illustrate two examples of interactive indicators that provide a first level of information.

FIGS. **3**A and **3**B illustrate an example of a user interacting with a status indicator to provide a second level of information.

FIG. **4** is a block diagram illustrating certain details of a mobile device that can provide interactive indicators.

FIG. **5** is a flow diagram of an example method of providing interactive indicators with a mobile device.

FIG. **6** is a schematic representation of an exemplary mobile device that can implement interactive indicators.

FIG. **7** is a block diagram illustrating additional details of the internal architecture of the device of FIG. **6**.

FIG. **8** is a block diagram illustrating exemplary components of the operating system used by the device of FIG. **6**.

FIG. **9** is a block diagram illustrating exemplary processes implemented by the operating system of FIG. **8**.

FIG. **10** shows an example of a computer device and a mobile computer device that can be used to implement the techniques described here.

Like reference symbols in the various drawings indicate like elements.

DETAILED DESCRIPTION

This document describes methods and systems for providing interactive alert information (e.g., interactive indicators or icons) in a device such as a mobile computing or communication device that can provide a user of the device with progressively more information about an event (e.g., the receipt of an email) in response to the user's interaction with the alert information. In particular, for example, multiple levels of detail corresponding to alert information can be provided. The multiple levels of detail can include a first level of information, which can be displayed with an initial interactive alert indicator; a second level of information can be displayed when a user of the device selects the initial interactive alert indicator; a third level of information can be displayed when the user selects the interactive alert indicator a second time (or selects a display of the second level of information). In some implementations, the device provides a mechanism for displaying interactive alert information for any application running on the device.

FIG. **1** illustrates an example mobile device that can display interactive indicators. FIGS. **2**A and **2**B illustrate two examples of status indicators that provide a first level of information. FIGS. **3**A and **3**B illustrate an example of a user interacting with a status indicator to provide a second level of information. In some implementations, a third level of information associated with an interactive indicator can be provided when the user interacts with the second level of information that is illustrated in FIGS. **3**A and **3**B. The remaining figures provide additional detail of mobile devices that can provide interactive indicators in the manner shown in and described with reference to FIGS. **1**, **2**A, **2**B, **3**A and **3**B.

Turning to FIG. **1**, an example mobile device **101** that can display interactive indicators is shown. The mobile device **101** is shown as a slider-style smartphone, but the mobile device **101** can be any mobile communication or computing device, such as a cell phone, personal digital assistant (PDA), media player, navigational device, etc. Typically, such devices provide various computing resources that enable a user to interact with the device through input/output facilities, and in particular, to run applications that enable the user to process data or media in some manner. Some such devices also provide communication facilities, such as voice, data and messaging services. Additional example details of mobile devices are provided below, for example, with reference to FIGS. **6**-**10**. The exact type of mobile device is not critical to this description, and the reader will appreciate that the principles described herein can be applied to other devices that are not traditionally characterized as mobile devices. For example, the principles described herein can be advantageously applied to other devices having touch-sensitive displays, such as, for example, dash-mounted vehicle navigation systems and display-equipped consumer appliances (e.g., washers, dryers, dishwashers, microwaves, refrigerators, wine cabinets, coffee makers, etc).

As depicted in one implementation in FIG. **1**, the mobile device **101** (also referred to as the "smartphone **101**") includes a display screen **104** for displaying graphical information to the user, and various buttons and keys to receive input from the user. In some implementations, additional keys are available under the display screen **104** and can be accessed by sliding the screen up and away from a bottom portion **108**.

In some implementations, the display screen **104** is a touch screen that is configured to receive tactile input from the user. For example, when the mobile device **101** detects that an object (e.g., a user's finger or a stylus) is in contact with the display screen **104**, the mobile device **101** can cause a keyboard image (e.g., a soft keyboard) to be displayed. The user can contact specific portions of the display screen **104** above the keyboard image to provide corresponding input to the mobile device **101**. Various other details of mobile devices,

such as the mobile device **101**, are described below with reference to FIGS. **4** and **6-10**.

As shown in one implementation, the display screen **104** includes two areas: an application area **105** that consumes much of the screen real estate, and a status bar **107**. The mobile device **101** can employ the application area to display menus of applications that are available to users of the mobile device **101** or information associated with one or more applications that may be currently running on the mobile device **101**. For example, for purposes of illustration, a messaging application is depicted in the application area **105**.

In some implementations, the status bar **107** is a standard area where various system status information can be displayed. As an example of typical system status information, a signal-strength indicator **110** that graphically includes four bars is shown, which may correspond to a detected strength of a wireless communication signal that is currently available to the mobile device **101**. As the strength of the signal changes, the number or character of the bars may change. For example, detection by the mobile device **101** of a small decrease in signal strength may cause the device to display only the three smallest bars, or to display outlines of all four bars but only fill in the smallest three bars. A "DATA" indicator is shown below the four bars and may indicate a type of wireless signal that is available or a current mode of the device. In other modes, other indicators may be displayed (e.g., "VOICE," "ANALOG," "DIGITAL," "CDMA," "GSM," etc.). As another example of a type of system status information, a battery icon **113** is depicted. A fraction of the battery icon **113** that is filled in may correspond to a fraction or percentage of power remaining in a battery that is included in the mobile device **101**. The lightning bolt icon that is displayed over the battery icon may indicate that the power source is currently charging (e.g., that the mobile device may be connected to a charging device, such as an alternating current (AC) power adapter). As another example of a type of system status information, an analog clock icon **116** is displayed that may apprise the user of the current time.

Each of the above-described example indicators may be a static indicator. For example, although the indicator may change based on environmental parameters (e.g., the character of the bars **110** may change based on a detected signal strength, the battery icon **113** may change based on a current level of power in a power source in the device, and the clock icon **116** may change with the time), the static indicators may not change in character or appearance, or provide additional information, in response any user's attempts to interact with the static indicators. Moreover, many example static indicators may be associated with system functions or parameters of the mobile device **101** rather than with specific applications that run on the mobile device **101**. Other indicators that are associated with specific applications may be displayed (not shown, but may include, for example an envelope icon to indicate that a messaging application has received a new message), but such indicators may, likewise, be static in the sense of not supporting direct user interaction (e.g., the character or appearance of these indicators may not change in response to a user's attempts to interact with them).

The mobile device **101** may also provide interactive indicators (e.g., alerts). In contrast to the static indicators described above, interactive indicators can support user interaction. That is, an interactive indicator can be configured to progressively display more information in response to received user input associated with the interactive indicator. In particular, for example, an interactive indicator may initially provide a first level of information or detail about an application or parameter of the mobile device **101**. In response to initial first user input associated with the interactive indicator, the interactive indicator may provide a second level of information or detail (e.g., more information or detail than is provided in the first level) about the application or parameter. In some implementations, subsequent user input associated with the interactive indicator can cause the interactive indicator to provide a third level of information or detail associated with the application or parameter. Providing additional levels of detail can, in some implementations, include activating an application or initiating a network communication corresponding to the interactive indicator. Examples of interactive indicators are provided in and discussed with reference to FIGS. **2**A and **2**B.

FIG. **2**A illustrates time-sequenced screenshots from a portion of the display screen **104** that depict an example interactive indicator that provides a first level of information. The example depicted in FIG. **2**A is one in which receipt of a short message service (SMS) message is announced with an icon **204** and preview content that are scrolled across the status bar **107**. As shown in screenshot **202**A, an "SMS" balloon **204** begins to appear at the right side of the status bar **107**. The SMS balloon **204** scrolls to the left of the status bar, as depicted by screenshots **202**B and **202**C. In this example, a sender and message preview is provided during a user review period. The message preview may include the full text of very short messages, or it may include a first portion or snippet of the message (e.g., the first sentence, or an amount of the message that fits in the status bar, after the sender or a portion of identifying information for the sender is provided). After a short period of time (e.g., a user review period), the sender and message preview may be removed from the status bar, as depicted by screenshot **202**D.

In some implementations, while the interactive indicator **204** scrolls across the status bar **107**, the prominence of other status information may be reduced. For example, as shown in one implementation in screenshots **202**A-C, the intensity of the static indicators **110**, **113** and **116** is reduced, and the interactive indicator (e.g., the icon **204** and the corresponding preview) are superimposed over the static indicators. Once the preview content associated with the interactive indicator **204** is removed, the intensity of the static indicators may be restored, as depicted in screenshot **202**D. Additional levels of detail or information may be displayed upon receipt of user input associated with the interactive indicator **204**, as will be described in greater detail, with reference to FIGS. **3**A and **3**B.

FIG. **2**B illustrates another set of time-sequenced screenshots from a portion of the display screen **104** that depict another example interactive indicator **208** that provides a first level of information. The example depicted in FIG. **2**B is one in which receipt of an email message is announced with an envelope icon **208** and preview content that are scrolled across the status bar **107**. As shown in screenshot **205**A, the envelope icon **208** begins to appear at the right side of the status bar. The envelope icon **208** may scroll across the status bar **107** to the left, along with a preview of the email message (e.g., an indication of the sender and a subject or first portion of the body of the message), as depicted in screenshots **205**B and **205**C. As in the case of the SMS indicator, the preview associated with the email indicator may disappear after a user review period.

In some implementations, the user review period is preset for a period of time that may allow a user to read the preview content (e.g., 5, 10 or 30 seconds, or some other period). In some implementations, the user review period is user-configurable. In some implementations, the user review period may be influenced by how may other interactive alerts are queued

for display. For example, if only a single interactive indicator is to be displayed, preview content associated with the single interactive indicator may be displayed for 30 seconds, whereas if five interactive indicators are to be displayed, preview content for each of the five interactive indicators may only be displayed for five or 10 seconds each.

In the above description, the interactive indicators are depicted and described as being scrolled across the screen. However, in other implementations, interactive indicators may be displayed differently. For example, an interactive indicator may immediately appear without scrolling (e.g., in the left corner of the status bar **107**), but the interactive indicator may flash for an initial user review period (e.g., while corresponding preview content is displayed in either a flashing or fixed format). As another example, the interactive indicator may initially appear in one color or shade but change color or shade during or after a user review period. As another example, the interactive indicator may simply appear—with or without preview content—but without being displayed in a manner designed to capture the user's attention.

In some implementations, the interactive indicators are displayed immediately upon being activated. For example, in the context of the SMS example depicted in FIG. **2**A or the email example depicted in FIG. **2**B, the corresponding interactive indicator may appear as soon as the corresponding SMS or email message is received. In some implementations, the interactive indicators are displayed based on other input. For example, the mobile device **101** may include a component that detects when the mobile device **101** is in a particular position, such as a display-screen-up position, with the device at an angle that indicates a user is likely to be viewing the contents of the display screen. In such implementations, interactive indicators may be queued as they are activated (e.g., when the SMS and email messages are received in the example above), then displayed when the particular position is detected (e.g., when the device detects that the user is likely viewing the screen contents). As another example, the interactive indicators may be displayed when the display of the mobile device **101** is powered on (e.g., following a transition from a reduced power mode, such a dark-display sleep mode).

In some implementations, additional levels of information or detail may be provided when the mobile device **101** receives user input associated with an interactive indicator, as will now be described with reference to FIGS. **3**A and **3**B.

FIGS. **3**A and **3**B depict an example of a user interacting with the status indicator **208** to receive a second level of information. In particular, screenshot **302**A depicts a user of the mobile device **101** selecting the interactive envelope indicator **208** by touching the graphical display above the indicator. This example depicts the mobile device **101** receiving user input through a touch-sensitive display **104**. Alternatively, a device **101** that does not have a touch-sensitive display **104** could receive input to select the interactive indicator in another manner (e.g., with a button-controlled cursor).

Upon receipt of user input selecting the interactive indicator, a second level of information can be displayed, as depicted in screenshot **302**B. In this example, a pop-up window **303** appears, which provides a second level of detail that provides more detail than is provided by the first level of detail. In particular, as depicted in one implementation, a sender, subject line and first portion of the body of an email message are provided (in contrast to just the sender and subject line depicted in screenshots **205**A-D).

In some implementations, two inputs (e.g., two touch-selections) may be necessary to cause the pop-up window **303** to be displayed. In particular, touch input associated with the interactive indicator depicted in screenshot **302**A may activate the interactive indicators. That is, the interactive indicators may be in an inactive state (e.g., a state in which input associated with them activates them but does not immediately bring up a second level of information). Upon receipt of input associated with one of the interactive indicators, the interactive indicator(s) may be transitioned to an active state (and the character of the interactive indicators may change, such as by being displayed in a slightly different window **304** (e.g., a larger floating window)). Subsequent input associated with a specific interactive indicator in its active state (e.g., the envelope icon **208**) may then cause the pop-up window **303** to be displayed. In this manner, unwanted presentations of more detailed levels of information (which may otherwise result, for example, by inadvertent contact by the user with the status bar **107**, and which may annoy the user) may be prevented. The window **304** can also provide another function and advantage, as is now described.

The window **304** can assist a user in accurately selecting a desired icon. In general, the window **304** shows an enlargement of a selectable object underneath what has been determined by the device to be a location of a finger or other pressing selection. The particular selected item under the selection is enlarged upon a touch in that location so that a user may more readily see what object was selected, in case the user did not intend to select that particular object. In some implementations, the objects on each side of the selected object may also be enlarged, either to the same extent as is the selected object or to a lesser extent so that the selected objects blend with the surrounding interface. Also, objects around the enlarged objects may lay underneath the newly enlarged objects, or may be pushed outward to make room for the enlarged objects. The level of enlargement may also increase one or more times (e.g., multiple times) while the user keeps his or her finger (or other pointer) pressed down, up until a maximum level of enlargement. The user may then roll or slide his or her finger or other pointer if the selected object is not the object he or she intended to select. A selection action may be invoked upon a pointer-up condition.

On devices with smaller screens, such a feature may provide certain usability advantages. For example, it may be preferable to provide greater resolution and additional objects from which a user may select. But such an approach may make it difficult for people with large fingers to select the right object, and the selected object (an adjacent objects that were intended for selection) may be hidden beneath their person's finger. By enlarging the objects when the person's finger is still pressed down, the system may enable the person to immediately see that there is a problem in their selection, and to correct that problem by moving their finger to the proper selection.

The second level of detail may be cumulative relative to multiple alerts, interactive indicators, or instances of an interactive indicator. For example, in the context of an email message indicator, the icon **208** and a corresponding preview may be scrolled across the status bar **107** each time an email message is received. For the first email message for which an interactive indicator is displayed, the interactive indicator may be displayed as depicted in screenshots **205**A-D. For subsequent emails, another interactive indicator and corresponding preview content may be displayed as depicted in screenshots **205**A-**205**C, but only a single interactive indicator may be ultimately displayed for the corresponding application. That is, only a single envelope icon **208** may remain after corresponding preview content has been removed from the status bar **107**—regardless of how may email messages are announced with a scrolling icon **208**. (In other words, even

though each of multiple email messages may be announced, only a single envelope icon **208** may remain in the status bar **107**.)

In this example, the second level of detail may include information for each email for which a first level of detail has been provided (e.g., a scrolling icon **208** and corresponding preview content). That is, as depicted in one example in screen shot **302**B, the second level of detail (e.g., the pop-up window **303**) includes detail **305**A, **305**B and **305**C for three email messages that may have been received since a user last interacted with a corresponding icon **208**. In other implementations, the details **305**A, **305**B and **305**C could relate to messages in a corresponding email application that have some characteristic (e.g., they may be marked as unread, they may be from a particular sender, they may have a particular level of priority, they may be confidential, or they may have some combination of these or other attributes).

In some implementations, the mobile device is configured to receive additional input associated with the second level of detail. In response to the additional input, the mobile device **101** can provide a third level of detail in response to such additional input, or take some other action. For example, the mobile device **101** may activate an application associated with interactive indicator in response to user selection of the second level of detail. In particular, for example, a user could select the "Dora Explora" detail **305**B to activate an email application.

Activating an application can include launching the application if it is not already running (i.e., actively loaded in temporary memory of the mobile device **101**, such as RAM). Activating the application can also include giving the application focus (e.g., bringing a graphical user interface associated with the application to the foreground of the display, and setting the focus of appropriate input devices (a touch screen, application buttons, a soft keyboard, etc.) to that application. In this example, input associated with the "Dora Explora" detail **305**B may bring the email application to the foreground.

Activating an application may cause the second level of detail (e.g., the pop-up window **303**) to disappear. In some implementations, the first level of detail (e.g., the envelope icon **208**) may also be removed from the display. For example, the mobile device may cause the envelope icon **208** to be removed from the status bar **107** when a corresponding email application is activated. In other implementations, the second level of detail (e.g., the pop-up window **303**) disappears, but the first level of detail (e.g., the envelope icon **208** in the status bar **107**) may remain. In the context of the above example, for instance, the envelope icon **208** may remain in the status bar until the second level of detail for the other messages (detail **305**A and **305**C) is selected, or until the corresponding massages are processed in some manner in the application (e.g., until the email messages are read in the email application).

Activating the application can also include setting the focus of the application to correspond to a third level of information associated with the interactive indicator. In the context of the above example pertaining to email messages, input associated with the "Dora Explora" detail **305**B can cause the email application to activated, and the corresponding "Dora Explora" email to be opened (e.g., in a preview or editing pane, window or frame associated with the email application).

In some implementations, the second level of detail may facilitate additional user interaction. For example, selection of the detail **305**B may cause the full corresponding message (or a larger portion thereof) to be displayed within the pop-up window **303**), without causing the underlying application to be launched. As another example, selection of the detail **305**B may activate various controls within the pop-up window **303** or in another pop-up window to dispose of corresponding content in the underlying application (e.g., in this context, controls may be provided for marking the "Dora Explora" message as read in the email application, or for deleting the message, or routing it to a folder, or taking some other action). In this manner, the interactive indicators can, in some implementations, enable the user of the mobile device **101** to efficiently process information without causing extra or unnecessary context switches in the mobile device **101** or on the display screen **104**.

Examples have been provided in the context of SMS and email messaging applications, but interactive indicators can be provided for any application. Some such applications are applications that are provided with the mobile device (e.g., by the manufacturer of the mobile device or by the service provider associated with the mobile device); other applications are added to the mobile device by the user (e.g., by downloading them from a third party, by adding them through an interface that facilitates addition of user programs, or by direct programming by the user). In particular, as will be described in more detail with reference to other figures, some implementations permit interactive indicators to be associated with and activated by any application running on the mobile device. For purposes of illustration, two additional examples are briefly described.

One example of another application that can employ interactive indicators is an application that uses location-sensing technology in the mobile device to detect when the mobile device is nearing a bus stop (e.g., a location that has been registered or configured as a bus stop). Input from the location-sensing technology (e.g., a Global Positioning System (GPS) module) can cause an interactive indicator to appear in the status bar (e.g., an icon in the shape of a bus). Subsequent user selection of the interactive indicator can cause a pop-up window to appear from which the user can select particular information from a second level of detail, such as a specific bus route from a list of different bus routes (e.g., specific routes that are stored in the mobile device, that the user has previously configured, or routes that are downloaded (e.g., dynamically) from a third-party's site or service).

Subsequent user selection of the second level of detail can cause a third level of detail to be provided. In particular, for example, a time that a next bus for the selected route is to arrive at the bus stop nearest the mobile device may be displayed. Such information can be retrieved from data stored on the mobile device, or the information may be retrieved from a third-party's site or service (e.g., dynamically). As another example, the third level of detail could include a full schedule for the selected route, or an alternate route (e.g., if a bus recently passed the stop and some time will pass before another bus is expected).

An additional example of another application that can employ interactive indicators is an application for notifying a user when a particular profile available through a social networking service or site (e.g., FACEBOOK, MYSPACE, FRIENDSTER, etc.) is updated. An application running in the background on the mobile device may periodically query a social networking service to determine if a particular profile has recently been updated (e.g., a profile that a user of the mobile device has configured to be checked, or a profile recently visited from the mobile device). If the application determines that the profile has been updated since a previous query, an interactive indicator may be provided in the status bar **107** (e.g., an icon in the shape of a person's head).

Subsequent user selection of the interactive indicator may provide a second level of detail (e.g., a pop-up window indicating when the profile was updated). The second level of detail may provide additional information, such as the last time other profiles were updated that the mobile device user may be interested in. User selection of the second level of detail may cause a browser application to be activated and content to be retrieved from the corresponding profile (or another social networking application may be activated, possibly with a focus set to the corresponding profile).

The above examples illustrate various aspects of interactive indicators. The reader will appreciate that interactive indicators can be employed in any other context—for example, contexts where it is advantageous to provide a user with some sort of an alert message, and subsequently allow the user to interact with the alert message in order to receive progressively more information associated with the alert message or the underlying application or application data that caused the alert message to be launched.

FIG. **4** is a schematic representation of an exemplary mobile device **401** that can implement interactive indicators as described herein. Additional details of mobile devices generally, such as the mobile device **101** or **401**, are illustrated in and described with reference to FIGS. **6-10**.

As depicted in one implementation in FIG. **4**, the mobile device **401** includes a display screen **404** (and possibly other output devices, which are not shown), input devices **407** (e.g., buttons, a hard keyboard, a soft keyboard (such as an image of a keyboard on a touch-sensitive screen, etc.), and applications **410** (e.g., programming code stored in memory that can be executed by a processor to receive input from the input devices **407**, process the input and present corresponding output in the display screen **404** or through other output devices. A display module **413** can include programming code and hardware necessary to receive information from the applications and from other sources, transform the information into a format that is suitable for controlling the display screen (e.g., a pixel format that specifies data for each pixel in the display screen including, for example, a row and column address, a color for the pixel, and an intensity for the pixel), and provide the transformed information to the display screen (or more particularly, a hardware interface that controls the display screen, in some implementations).

As described above with reference to other figures, some applications can include messaging applications (e.g., SMS or email applications). Accordingly, the mobile device **401** can include messaging data storage **416** reserved for the messaging data (e.g., an area for storing sent messages or messages in an inbox).

The mobile device **401** can also include a device status monitor **419** (e.g., a static indicator module) for monitoring various system aspects of the mobile device. For example, the device status monitor **419** can monitor the power remaining in a battery (depicted by element **422**) included in the mobile device, and the device status monitor **419** can cause a graphical depiction of the remaining power to be displayed in the display screen by providing appropriate information to the display module **413**. In particular, for example, the device status monitor **419** can cause a static indicator, such as the battery icon **113** that is shown in the status bar **107** in FIGS. **1**, **2**A and **2**B, or the battery life indicator **616** shown in FIG. **6** (described more below). As another example, the device status monitor **419** can monitor signal strength (e.g., with a signal strength monitoring device **425** (e.g., a receiver) of a wireless communication signal that is currently available to the mobile device **401**, and can cause an icon to be displayed that depicts the signal strength. In particular, for example, the device status monitor can **419** cause a static indicator, such as the four bars that are shown in the status bar **107** in FIGS. **1**, **2**A and **2**B, or the signal strength indicator **615** shown in FIG. **6** (described more below). As another example, the device status monitor **419** can cause a current time to be displayed in the status bar **107** (e.g., as an analog clock icon or a digital indication of time), based on input received from a timing module (depicted as element **428**—which could be, for example, an internal time-keeping mechanism, and/or a receiver that periodically extracts timing information from received wireless communication signals).

To provide interactive icon functionality, the mobile device **401** can include an interface **431** and an alert management module **434**. In some implementations, the alert management module **434** receives alert information from one or more of the applications **410**, and generates interactive icons in response to the alert information. In particular, with reference to the example interactive email indicator described above and illustrated in screenshots **205**A-D (FIG. **2**B), the alert management module **434** can receive information from a corresponding email application that an email message has been received. The alert management module **434** can also receive additional information about the email message, such as, for example, a corresponding sender, subject, and a portion of the content (e.g., a snippet of content) or the full body of the message.

With the additional information, the alert management module **434** can generate different levels of detail for the email message, which can be provided in an interactive indicator and in additional windows or applications that may be activated in response to user interaction with the interactive indicator. In particular, for example, the alert management module **434** can cause an initial icon to be displayed (e.g., the envelope icon **208** that is depicted as scrolling across the status bar in FIG. **2**B, as well as the corresponding preview content (sender and subject)). The alert management module can also cause the pop-up window **303** depicted in FIG. **3**B to be displayed in response to user interaction (e.g., user selection with a pointing device or with tactile input on a touch-sensitive screen).

In one implementation, as depicted in FIG. **4**, the mobile device **401** can employ the interface **431** to receive information from the applications and provide this information to the alert management module **434** (possibly in a different format). The interface **431** can, in some implementations, shield the alert management module **434** and display module **413** from being directly accessed by the applications **410**. By shielding the alert management module **434** and the display module **413**, the interface **431** may protect the mobile device **401** from crashes, exceptions or other errors caused by poorly written or malicious programming code in the applications **410**. Malicious code can be of particular concern in cases where aspects of the mobile device are open to direct interaction by custom applications that the user may add to the mobile device. For example, with an open architecture in which any developer can create new applications that use interactive indicator functionality, the interface **431** can intercept malicious of errant code before such code compromises the integrity of the display module **413** or the mobile device **401** itself.

In some implementations, the interface **431** can protect against errant or malicious code by providing information to the display module **413** or the alert management module **434** through controlled, protected function calls. That is, information to be displayed on the display screen **404** may be provided to the display module **413** only through protected function calls, and those protected function calls may only be

accessible to the interface **431**, rather than being directly accessible to the applications. In such scenarios, data may be passed from the applications **410** to the interface, along with requests (e.g., control signals) for the data to be passed to the display module **413** or the alert management module **434**, but the applications may not have the capability to directly control the display screen **404** (or other hardware functionality), thereby reducing the risk that errant or malicious applications will be able to crash the mobile device

The use of calls to protected functions by the interface **431** is just one example of how the mobile device **401** may protect against errant or malicious code crashing or otherwise causing undesirable behavior. Other methods can be employed to provide a mobile device that is resistant to malicious or errant code. For example, an operating system can rigorously manage various application threads or programs that may be running on the mobile device and terminate any threads or programs that are not behaving in predictable manners. More particularly, a thread that repeatedly attempts to make outgoing calls may be terminated; a thread that is consuming more than a threshold amount of processing time or memory without much corresponding output may also be terminated. As another example, certain functions within the mobile device may be restricted to respond only to function calls from certain regions of memory or from certain modules within the mobile device. Moreover, format of the function calls may be rigorously checked, and the function calls may be ignored if the format is not appropriate, in order to reduce the likelihood that malicious or errant function calls will be made. Other methods of protecting a device from errant or malicious code are known and contemplated.

FIG. **5** is a flow diagram of an example method **501** of providing interactive indicators with a mobile device. In operation, the method **501** can cause progressively more information to be provided in response to a user's interaction with an initial interactive indicator. For example, as described above, an interactive indicator and a first level of detail can be initially provided. In response to user input associated with the interactive indicator (e.g., user input from a touch-sensitive screen associated with the interactive indicator), a second level of detail can be provided (e.g., more detail than is provided initially). In some implementations, user input associated with the second level of detail can cause a third level of detail (e.g., more detail than provided by the first or second levels of detail) to be provided. In particular, for example, providing the third level of detail may include activating an application associated with the interactive indicator, and setting the focus of the application to information corresponding to the interactive indicator.

The method **501** can include displaying (**503**) device status indicators in a status area. For example, with reference to FIG. **1**, static indicators for signal strength (element **110**), remaining battery power (element **113**) or current time (element **116**) can be displayed in the status bar **107**. With reference to FIG. **4**, the static indicators may be displayed in response to information from the device status monitor **419** (e.g., information captured by monitoring elements **422**, **425** or **428**).

The method **501** can include receiving (**506**) information from an application to display an alert (e.g., an interactive indicator) in the status area of a display screen. For example, with reference to FIG. **4**, the alert management module **434** can receive information (e.g., an indication that an email message has been received) from one of the applications **410** (e.g., an email messaging application). The alert management module **434** may receive the information indirectly, through the interface **431**. That is, the appropriate application from the applications **410** may indicate to the interface **431** that an alert message (e.g., an interactive indicator) should be provided; the interface **431** may, in turn, provide this information to the alert management module **434** in a manner that protects the integrity of the mobile device **401** (e.g., through a protected function call).

The method **501** can include displaying (**509**) in the status area a first level of information for the alert (e.g., status alert information) and a user-selectable control. For example, with reference to FIG. **2**B (and in the context of an interactive indicator associated with an email message), an envelope icon **208** can be displayed in the status bar **107** (e.g., scrolled across the status bar **107**), and a first level of information can be provided with the icon **208** (e.g., preview content, such as a sender and subject line, or portion thereof, associated with the email). In some implementations, the preview content is displayed for a short period of time (e.g., a user review period, such as five seconds, 30 seconds, or some other period of time). The preview content can be displayed when the corresponding email is received, or in response to some other input (e.g., input indicating that the mobile device **401** is positioned such that a user is likely to be viewing contents of the display screen).

The method **501** can include displaying (**512**), in response to selection of the user-selectable control, a second level of information. For example, with reference to FIGS. **3**A and **3**B, user input, such as user selection on a touch-sensitive screen of the envelope icon **208**, can cause the pop-up window **303** to be displayed, which can provide a second level of detail, which provides more detail that initially provided. In particular, for example, the second level of detail can include a snippet or portion of the body of the email message, as depicted by elements **305**A-C.

In some implementations, the method **501** includes activating an application associated with the received information that was received (**506**) to display the initial alert, in response to selection of the second level of information (**515**). For example, in response to user selection of the detail **305**B in the pop-up window **303**, an email application can be activated (e.g., brought to the foreground of the display or launched if not currently active), and focus in the application can be set to the content of the interactive indicator (e.g., the specific email message announced by the interactive indicator).

Referring now to FIG. **6**, the exterior appearance of an exemplary device **600** that provides interactive indicators is illustrated. Briefly, and among other things, the device **600** includes a processor configured to provide interactive indicators, which can reveal progressively more information about an alert message, in response to user interaction with the corresponding interactive indicator.

In more detail, the hardware environment of the device **600** includes a display **601** for displaying text, images, and video to a user; a keyboard **602** for entering text data and user commands into the device **600**; a pointing device **604** for pointing, selecting, and adjusting objects displayed on the display **601**; an antenna **605**; a network connection **606**; a camera **607**; a microphone **609**; and a speaker **610**. Although the device **600** shows an external antenna, the device **600** can include an internal antenna, which is not visible to the user.

The display **601** can display video, graphics, images, and text that make up the user interface for the software applications used by the device **600**, and the operating system programs used to operate the device **600**. Possible elements that may be displayed on the display **601** include, for example, a new mail indicator **611** that alerts a user to the presence of a new message; an active call indicator **612** that indicates that a telephone call is being received, placed, or is occurring; a data

standard indicator **614** that indicates the data standard currently being used by the device **600** to transmit and receive data; a signal strength indicator **615** that indicates a measurement of the strength of a signal received by via the antenna **605**, such as by using signal strength bars; a battery life indicator **616** that indicates a measurement of the remaining battery life; or a clock **617** that outputs the current time. Interactive indicators can also be dynamically displayed (not shown in FIG. **6**) as described above.

The display **601** may also show application icons representing various applications available to the user, such as a web browser application icon **619**, a phone application icon **620**, a search application icon **621**, a contacts application icon **622**, a mapping application icon **624**, an email application icon **625**, or other application icons. In one example implementation, the display **601** is a quarter video graphics array (QVGA) thin film transistor (TFT) liquid crystal display (LCD), capable of 16-bit color or better.

A user uses the keyboard (or "keypad") **602** to enter commands and data to operate and control the operating system and applications that provide for interactive indicators. The keyboard **602** includes standard keyboard buttons or keys associated with alphanumeric characters, such as keys **626** and **627** that are associated with the alphanumeric characters "Q" and "W" when selected alone, or are associated with the characters "*" and "1" when pressed in combination with key **629**. A single key may also be associated with special characters or functions, including unlabeled functions, based upon the state of the operating system or applications invoked by the operating system. For example, when an application calls for the input of a numeric character, a selection of the key **627** alone may cause a "1" to be input.

In addition to keys traditionally associated with an alphanumeric keypad, the keyboard **602** also includes other special function keys, such as an establish-call key **630** that causes a received call to be answered or a new call to be originated; a terminate call key **631** that causes the termination of an active call; a drop down menu key **632** that causes a menu to appear within the display **601**; a backward navigation key **634** that causes a previously accessed network address to be accessed again; a favorites key **635** that causes an active web page to be placed in a bookmarks folder of favorite sites, or causes a bookmarks folder to appear; a home page key **636** that causes an application invoked on the device **600** to navigate to a predetermined network address; or other keys that provide for multiple-way navigation, application selection, and power and volume control.

The user uses the pointing device **604** to select and adjust graphics and text objects displayed on the display **601** as part of the interaction with and control of the device **600** and the applications invoked on the device **600**. The pointing device **604** is any appropriate type of pointing device, and may be a joystick, a trackball, a touch-pad, a camera, a voice input device, a touch screen device implemented in combination with the display **601**, or any other input device.

The antenna **605**, which can be an external antenna or an internal antenna, is a directional or omni-directional antenna used for the transmission and reception of radiofrequency (RF) signals that implement point-to-point radio communication, wireless local area network (LAN) communication, or location determination. The antenna **605** may facilitate point-to-point radio communication using the Specialized Mobile Radio (SMR), cellular, or Personal Communication Service (PCS) frequency bands, and may implement the transmission of data using any number or data standards. For example, the antenna **605** may allow data to be transmitted between the device **600** and a base station using technologies such as Wireless Broadband (WiBro), Worldwide Interoperability for Microwave ACCess (WiMAX), 3GPP Long Term Evolution (LTE), Ultra Mobile Broadband (UMB), High Performance Radio Metropolitan Network (HIPERMAN), iBurst or High Capacity Spatial Division Multiple Access (HC-SDMA), High Speed OFDM Packet Access (HSOPA), High-Speed Packet Access (HSPA), HSPA Evolution, HSPA+, High Speed Upload Packet Access (HSUPA), High Speed Downlink Packet Access (HSDPA), Generic Access Network (GAN), Time Division-Synchronous Code Division Multiple Access (TD-SCDMA), Evolution-Data Optimized (or Evolution-Data Only)(EVDO), Time Division-Code Division Multiple Access (TD-CDMA), Freedom Of Mobile Multimedia Access (FOMA), Universal Mobile Telecommunications System (UMTS), Wideband Code Division Multiple Access (W-CDMA), Enhanced Data rates for GSM Evolution (EDGE), Enhanced GPRS (EGPRS), Code Division Multiple Access-2000 (CDMA2000), Wideband Integrated Dispatch Enhanced Network (WiDEN), High-Speed Circuit-Switched Data (HSCSD), General Packet Radio Service (GPRS), Personal Handy-Phone System (PHS), Circuit Switched Data (CSD), Personal Digital Cellular (PDC), CDMAone, Digital Advanced Mobile Phone System (D-AMPS), Integrated Digital Enhanced Network (IDEN), Global System for Mobile communications (GSM), DataTAC, Mobitex, Cellular Digital Packet Data (CDPD), Hicap, Advanced Mobile Phone System (AMPS), Nordic Mobile Phone (NMP), Autoradiopuhelin (ARP), Autotel or Public Automated Land Mobile (PALM), Mobiltelefonisystem D (MTD), Offentlig Landmobil Telefoni (OLT), Advanced Mobile Telephone System (AMTS), Improved Mobile Telephone Service (IMTS), Mobile Telephone System (MTS), Push-To-Talk (PTT), or other technologies. Communication via W-CDMA, HSUPA, GSM, GPRS, and EDGE networks may occur, for example, using a QUALCOMM MSM7200A chipset with an QUALCOMM RTR6285™ transceiver and PM7540™ power management circuit.

The wireless or wired computer network connection **606** may be a modem connection, a local-area network (LAN) connection including the Ethernet, or a broadband wide-area network (WAN) connection such as a digital subscriber line (DSL), cable high-speed internet connection, dial-up connection, T-1 line, T-3 line, fiber optic connection, or satellite connection. The network connection **606** may connect to a LAN network, a corporate or government WAN network, the Internet, a telephone network, or other network. The network connection **606** uses a wired or wireless connector. Example wireless connectors include, for example, an INFRARED DATA ASSOCIATION (IrDA) wireless connector, a Wi-Fi wireless connector, an optical wireless connector, an INSTITUTE OF ELECTRICAL AND ELECTRONICS ENGINEERS (IEEE) Standard 802.11 wireless connector, a BLUETOOTH wireless connector (such as a BLUETOOTH version 1.2 or 3.0 connector), a near field communications (NFC) connector, an orthogonal frequency division multiplexing (OFDM) ultra wide band (UWB) wireless connector, a time-modulated ultra wide band (TM-UWB) wireless connector, or other wireless connector. Example wired connectors include, for example, a IEEE-1394 FIREWIRE connector, a Universal Serial Bus (USB) connector (including a mini-B USB interface connector), a serial port connector, a parallel port connector, or other wired connector. In another implementation, the functions of the network connection **606** and the antenna **605** are integrated into a single component.

The camera **607** allows the device **600** to capture digital images, and may be a scanner, a digital still camera, a digital video camera, other digital input device. In one example

implementation, the camera **607** is a 3 mega-pixel (MP) camera that utilizes a complementary metal-oxide semiconductor (CMOS).

The microphone **609** allows the device **600** to capture sound, and may be an omni-directional microphone, a unidirectional microphone, a bi-directional microphone, a shotgun microphone, or other type of apparatus that converts sound to an electrical signal. The microphone **609** may be used to capture sound generated by a user, for example when the user is speaking to another user during a telephone call via the device **600**. Conversely, the speaker **610** allows the device to convert an electrical signal into sound, such as a voice from another user generated by a telephone application program, or a ring tone generated from a ring tone application program. Furthermore, although the device **600** is illustrated in FIG. **6** as a handheld device, in further implementations the device **600** may be a laptop, a workstation, a midrange computer, a mainframe, an embedded system, telephone, desktop PC, a tablet computer, a PDA, or other type of computing device.

FIG. **7** is a block diagram illustrating an internal architecture **700** of the device **600**. The architecture includes a central processing unit (CPU) **701** where the computer instructions that comprise an operating system or an application are processed; a display interface **702** that provides a communication interface and processing functions for rendering video, graphics, images, and texts on the display **601**, provides a set of built-in controls (such as buttons, text and lists), and supports diverse screen sizes; a keyboard interface **704** that provides a communication interface to the keyboard **602**; a pointing device interface **705** that provides a communication interface to the pointing device **604**; an antenna interface **706** that provides a communication interface to the antenna **605**; a network connection interface **707** that provides a communication interface to a network over the computer network connection **606**; a camera interface **708** that provides a communication interface and processing functions for capturing digital images from the camera **607**; a sound interface **709** that provides a communication interface for converting sound into electrical signals using the microphone **609** and for converting electrical signals into sound using the speaker **610**; a random access memory (RAM) **710** where computer instructions and data are stored in a volatile memory device for processing by the CPU **701**; a read-only memory (ROM) **711** where invariant low-level systems code or data for basic system functions such as basic input and output (I/O), startup, or reception of keystrokes from the keyboard **602** are stored in a non-volatile memory device; a storage medium **712** or other suitable type of memory (e.g. such as RAM, ROM, programmable read-only memory (PROM), erasable programmable read-only memory (EPROM), electrically erasable programmable read-only memory (EEPROM), magnetic disks, optical disks, floppy disks, hard disks, removable cartridges, flash drives), where the files that comprise an operating system **713**, application programs **715** (including, for example, a web browser application, a widget or gadget engine, and or other applications, as necessary) and data files **716** are stored; a navigation module **717** that provides a real-world or relative position or geographic location of the device **600**; a power source **719** that provides an appropriate alternating current (AC) or direct current (DC) to power components; and a telephony subsystem **720** that allows the device **600** to transmit and receive sound over a telephone network. The constituent devices and the CPU **701** communicate with each other over a bus **721**.

The CPU **701** can be one of a number of computer processors. In one arrangement, the computer CPU **701** is more than one processing unit. The RAM **710** interfaces with the computer bus **721** so as to provide quick RAM storage to the CPU **701** during the execution of software programs such as the operating system application programs, and device drivers. More specifically, the CPU **701** loads computer-executable process steps from the storage medium **712** or other media into a field of the RAM **710** in order to execute software programs. Data is stored in the RAM **710**, where the data is accessed by the computer CPU **701** during execution. In one example configuration, the device **600** includes at least 128 MB of RAM, and 256 MB of flash memory.

The storage medium **712** itself may include a number of physical drive units, such as a redundant array of independent disks (RAID), a floppy disk drive, a flash memory, a USB flash drive, an external hard disk drive, thumb drive, pen drive, key drive, a High-Density Digital Versatile Disc (HD-DVD) optical disc drive, an internal hard disk drive, a Blu-Ray optical disc drive, or a Holographic Digital Data Storage (HDDS) optical disc drive, an external mini-dual in-line memory module (DIMM) synchronous dynamic random access memory (SDRAM), or an external micro-DIMM SDRAM. Such computer readable storage media allow the device **600** to access computer-executable process steps, application programs and the like, stored on removable and non-removable memory media, to off-load data from the device **600**, or to upload data onto the device **600**.

A computer program product is tangibly embodied in storage medium **712**, a machine-readable storage medium. The computer program product includes instructions that, when read by a machine, operate to cause a data processing apparatus to store image data in the mobile device. In some implementations, the computer program product includes instructions that generate interactive indicators.

The operating system **713** may be a LINUX-based operating system such as the GOOGLE mobile device platform; APPLE MAC OS X; MICROSOFT WINDOWS NT/WINDOWS 2000/WINDOWS XP/WINDOWS MOBILE; a variety of UNIX-flavored operating systems; or a proprietary operating system for computers or embedded systems. The application development platform or framework for the operating system **713** may be: BINARY RUNTIME ENVIRONMENT FOR WIRELESS (BREW); JAVA Platform, Micro Edition (JAVA ME) or JAVA 2 Platform, Micro Edition (J2ME) using the SUN MICROSYSTEMS JAVASCRIPT programming language; PYTHON™, FLASH LITE, or MICROSOFT .NET Compact, or another appropriate environment.

The device stores computer-executable code for the operating system **713**, and the application programs **715** such as an email, instant messaging, a video service application, a mapping application word processing, spreadsheet, presentation, gaming, mapping, web browsing, JAVASCRIPT engine, or other applications. For example, one implementation may allow a user to access the GOOGLE GMAIL email application, the GOOGLE TALK instant messaging application, a YOUTUBE video service application, a GOOGLE MAPS or GOOGLE EARTH mapping application, or a GOOGLE PICASA imaging editing and presentation application. The application programs **715** may also include a widget or gadget engine, such as a TAFRI™ widget engine, a MICROSOFT gadget engine such as the WINDOWS SIDEBAR gadget engine or the KAPSULES™ gadget engine, a YAHOO! widget engine such as the KONFABULTOR™ widget engine, the APPLE DASHBOARD widget engine, the GOOGLE gadget engine, the KLIPFOLIO widget engine, an OPERA™ widget engine, the WIDSETS™ widget engine, a

proprietary widget or gadget engine, or other widget or gadget engine the provides host system software for a physically-inspired applet on a desktop.

Although it is possible for interactive indicators to be provided using the above-described implementation, it is also possible to implement the functions described herein as a dynamic link library (DLL), or as a plug-in to other application programs such as an Internet web-browser such as the FOXFIRE web browser, the APPLE SAFARI web browser or the MICROSOFT INTERNET EXPLORER web browser.

The navigation module **717** may determine an absolute or relative position of the device, such as by using the Global Positioning System (GPS) signals, the GLObal NAvigation Satellite System (GLONASS), the Galileo positioning system, the Beidou Satellite Navigation and Positioning System, an inertial navigation system, a dead reckoning system, or by accessing address, internet protocol (IP) address, or location information in a database. The navigation module **717** may also be used to measure angular displacement, orientation, or velocity of the device **600**, such as by using one or more accelerometers.

FIG. **8** is a block diagram illustrating exemplary components of the operating system **713** used by a device, in the case where the operating system **713** is the GOOGLE mobile device platform. The operating system **713** invokes multiple processes, while ensuring that the associated phone application is responsive, and that wayward applications do not cause a fault (or crash) of the operating system. Using task switching, the operating system **713** allows for the switching of applications while on a telephone call, without losing the state of each associated application. The operating system **713** may use an application framework to encourage reuse of components, and provide a scalable user experience by combining pointing device and keyboard inputs and by allowing for pivoting. Thus, the operating system can provide a rich graphics system and media experience, while using an advanced, standards-based web browser.

In some implementations, the operating system **713** is organized into six components: a kernel **800**, libraries **801**, an operating system runtime **802**, application libraries **804**, system services **805**, and applications **806**. The kernel **800** includes a display driver **807** that allows software such as the operating system **713** and the application programs **715** to interact with the display **601** via the display interface **702**, a camera driver **809** that allows the software to interact with the camera **607**; a BLUETOOTH driver **810**; an M-Systems driver **811**; a binder (IPC) driver **812**, a USB driver **814** a keypad driver **815** that allows the software to interact with the keyboard **602** via the keyboard interface **704**; a WiFi driver **816**; audio drivers **817** that allow the software to interact with the microphone **609** and the speaker **610** via the sound interface **709**; and a power management component **819** that allows the software to interact with and manage the power source **719**.

The BLUETOOTH driver, which in one implementation is based on the BlueZ BLUETOOTH stack for LINUX-based operating systems, provides profile support for headsets and hands-free devices, dial-up networking, personal area networking (PAN), or audio streaming (such as by Advance Audio Distribution Profile (A2DP) or Audio/Video Remote Control Profile (AVRCP). The BLUETOOTH driver provides JAVA bindings for scanning, pairing and unpairing, and service queries.

The libraries **801** include a media framework **820** that supports standard video, audio and still-frame formats (such as Moving Picture Experts Group (MPEG)-4, H.264, MPEG-1 Audio Layer-3 (MP3), Advanced Audio Coding (AAC), Adaptive Multi-Rate (AMR), Joint Photographic Experts Group (JPEG), and others) using an efficient JAVA Application Programming Interface (API) layer; a surface manager **821**; a simple graphics library (SGL) **822** for two-dimensional application drawing; an Open Graphics Library for Embedded Systems (OpenGL ES) **824** for gaming and three-dimensional rendering; a C standard library (LIBC) **825**; a LIBWEBCORE library **826**; a FreeType library **827**; an SSL **829**; and an SQLite library **830**.

The operating system runtime **802** includes core JAVA libraries **831**, and a Dalvik virtual machine **832**. The Dalvik virtual machine **832** is a custom virtual machine that runs a customized file format (.DEX).

The operating system **713** can also include Mobile Information Device Profile (MIDP) components such as the MIDP JAVA Specification Requests (JSRs) components, MIDP runtime, and MIDP applications as shown in FIG. **8**. The MIDP components can support MIDP applications running on the device **600**.

With regard to graphics rendering, a system-wide composer manages surfaces and a frame buffer and handles window transitions, using the OpenGL ES **824** and two-dimensional hardware accelerators for its compositions.

The Dalvik virtual machine **832** may be used with an embedded environment, since it uses runtime memory very efficiently, implements a CPU-optimized bytecode interpreter, and supports multiple virtual machine processes per device. The custom file format (.DEX) is designed for runtime efficiency, using a shared constant pool to reduce memory, read-only structures to improve cross-process sharing, concise, and fixed-width instructions to reduce parse time, thereby allowing installed applications to be translated into the custom file formal at build-time. The associated bytecodes are designed for quick interpretation, since register-based instead of stack-based instructions reduce memory and dispatch overhead, since using fixed width instructions simplifies parsing, and since the 16-bit code units minimize reads.

The application libraries **804** include a view system **834**, a resource manager **835**, and content providers **837**. The system services **805** includes a status bar **839**; an application launcher **840**; a package manager **841** that maintains information for all installed applications; a telephony manager **842** that provides an application level JAVA interface to the media framework **820**; a notification manager **844** (which may include components such as the display module **413**, interface **431** and alert management module **434**, shown in FIG. **4**) that allows all applications access to the status bar and on-screen notifications; a window manager **845** that allows multiple applications with multiple windows to share the display **601**; and an activity manager **846** that runs each application in a separate process, manages an application life cycle, and maintains a cross-application history.

The applications **806** include a home application **847**, a dialer application **849**, a contacts application **850**, and a browser application **851**.

The telephony manager **842** provides event notifications (such as phone state, network state, Subscriber Identity Module (SIM) status, or voicemail status or other static indicators described with reference to FIGS. **1** and **4** (see, e.g., elements **110**, **113**, **116**, **419**, **422**, **425** and **428**)), allows access to state information (such as network information, SIM information, or voicemail presence), initiates calls, and queries and controls the call state. The browser application **851** renders web pages in a full, desktop-like manager, including navigation functions. Furthermore, the browser application **851** allows

single column, small screen rendering, and provides for the embedding of HTML views into other applications.

FIG. **9** is a block diagram illustrating exemplary processes implemented by the operating system kernel **900**. Generally, applications and system services run in separate processes, where the activity manager **910** runs each application in a separate process and manages the application life cycle. The applications run in their own processes, although many activities or services can also run in the same process. Processes are started and stopped as needed to run an application's components, and processes may be terminated to reclaim resources. Each application is assigned its own process, whose name is the application's package name, and individual parts of an application can be assigned another process name.

Some processes can be persistent. For example, processes associated with core system components such as the surface manager **916**, the window manager **914**, the activity manager **910**, or the notification manager **912** can be continuously executed while the device is powered. Additionally, some application-specific processes can also be persistent. For example, processes associated with the dialer application **921**, may also be persistent.

The processes implemented by the operating system kernel **900** may generally be categorized as system services processes **901**, dialer processes **902**, browser processes **904**, and maps processes **905**. The system services processes **901** include status bar processes **906** associated with the status bar **839**; application launcher processes **907** associated with the application launcher **840**; package manager processes **909** associated with the package manager **841**; activity manager processes **910** associated with the activity manager **846**; resource manager processes **911** associated with a resource manager **835** that provides access to graphics, localized strings, and XML layout descriptions; notification manger processes **912** associated with the notification manager **844** (and alert management module **434**, shown in FIG. **4**); window manager processes **914** associated with the window manager **845**; core JAVA libraries processes **915** associated with the core JAVA libraries **831**; surface manager processes **916** associated with the surface manager **821**; Dalvik virtual machine processes **917** associated with the Dalvik virtual machine **832**; and LIBC processes **919** associated with the LIBC library **825**.

The dialer processes **902** include dialer application processes **921** associated with the dialer application **849**; telephony manager processes **922** associated with the telephony manager **842** (and device status monitor **419**, shown in FIG. **4**); core JAVA libraries processes **924** associated with the core JAVA libraries **831**; Dalvik virtual machine processes **925** associated with the Dalvik Virtual machine **832**; and LIBC processes **926** associated with the LIBC library **825**.

The browser processes **904** include browser application processes **927** associated with the browser application **851**; core JAVA libraries processes **929** associated with the core JAVA libraries **831**; Dalvik virtual machine processes **930** associated with the Dalvik virtual machine **832**; LIBWEBCORE processes **931** associated with the LIBWEBCORE library **826**; and LIBC processes **932** associated with the LIBC library **825**.

The maps processes **905** include maps application processes **934**, core JAVA libraries processes **935**, Dalvik virtual machine processes **936**, and LIBC processes **937**. Notably, some processes, such as the Dalvik virtual machine processes, may exist within one or more of the systems services processes **901**, the dialer processes **902**, the browser processes **904**, and the maps processes **905**.

FIG. **10** shows an example of a generic computer device **1000** and a generic mobile computer device **1050**, which may be used with the techniques described here. Computing device **1000** is intended to represent various forms of digital computers, such as laptops, desktops, workstations, personal digital assistants, servers, blade servers, mainframes, and other appropriate computers. Computing device **1050** is intended to represent various forms of mobile devices, such as personal digital assistants, cellular telephones, smartphones, and other similar computing devices. The components shown here, their connections and relationships, and their functions, are meant to be exemplary only, and are not meant to limit implementations of the inventions described and/or claimed in this document.

Computing device **1000** includes a processor **1002**, memory **1004**, a storage device **1006**, a high-speed interface **1008** connecting to memory **1004** and high-speed expansion ports **1010**, and a low speed interface **1012** connecting to low speed bus **1014** and storage device **1006**. Each of the components **1002**, **1004**, **1006**, **1008**, **1010**, and **1012**, are interconnected using various busses, and may be mounted on a common motherboard or in other manners as appropriate. The processor **1002** can process instructions for execution within the computing device **1000**, including instructions stored in the memory **1004** or on the storage device **1006** to display graphical information for a GUI on an external input/output device, such as display **1016** coupled to high speed interface **1008**. In other implementations, multiple processors and/or multiple buses may be used, as appropriate, along with multiple memories and types of memory. Also, multiple computing devices **1000** may be connected, with each device providing portions of the necessary operations (e.g., as a server bank, a group of blade servers, or a multi-processor system).

The memory **1004** stores information within the computing device **1000**. In one implementation, the memory **1004** is a volatile memory unit or units. In another implementation, the memory **1004** is a non-volatile memory unit or units. The memory **1004** may also be another form of computer-readable medium, such as a magnetic or optical disk.

The storage device **1006** is capable of providing mass storage for the computing device **1000**. In one implementation, the storage device **1006** may be or contain a computer-readable medium, such as a floppy disk device, a hard disk device, an optical disk device, or a tape device, a flash memory or other similar solid state memory device, or an array of devices, including devices in a storage area network or other configurations. A computer program product can be tangibly embodied in an information carrier. The computer program product may also contain instructions that, when executed, perform one or more methods, such as those described above. The information carrier is a computer- or machine-readable medium, such as the memory **1004**, the storage device **1006**, memory on processor **1002**, or a propagated signal.

The high speed controller **1008** manages bandwidth-intensive operations for the computing device **1000**, while the low speed controller **1012** manages lower bandwidth-intensive operations. Such allocation of functions is exemplary only. In one implementation, the high-speed controller **1008** is coupled to memory **1004**, display **1016** (e.g., through a graphics processor or accelerator), and to high-speed expansion ports **1010**, which may accept various expansion cards (not shown). In the implementation, low-speed controller **1012** is coupled to storage device **1006** and low-speed expansion port **1014**. The low-speed expansion port, which may include various communication ports (e.g., USB, Bluetooth, Ethernet, wireless Ethernet) may be coupled to one or more input/

output devices, such as a keyboard, a pointing device, a scanner, or a networking device such as a switch or router, e.g., through a network adapter.

The computing device **1000** may be implemented in a number of different forms, as shown in the figure. For example, it may be implemented as a standard server **1020**, or multiple times in a group of such servers. It may also be implemented as part of a rack server system **1024**. In addition, it may be implemented in a personal computer such as a laptop computer **1022**. Alternatively, components from computing device **1000** may be combined with other components in a mobile device (not shown), such as device **1050**. Each of such devices may contain one or more of computing device **1000**, **1050**, and an entire system may be made up of multiple computing devices **1000**, **1050** communicating with each other.

Computing device **1050** includes a processor **1052**, memory **1064**, an input/output device such as a display **1054**, a communication interface **1066**, and a transceiver **1068**, among other components. The device **1050** may also be provided with a storage device, such as a microdrive or other device, to provide additional storage. Each of the components **1050**, **1052**, **1064**, **1054**, **1066**, and **1068**, are interconnected using various buses, and several of the components may be mounted on a common motherboard or in other manners as appropriate.

The processor **1052** can execute instructions within the computing device **1050**, including instructions stored in the memory **1064**. The processor may be implemented as a chipset of chips that include separate and multiple analog and digital processors. The processor may provide, for example, for coordination of the other components of the device **1050**, such as control of user interfaces, applications run by device **1050**, and wireless communication by device **1050**.

Processor **1052** may communicate with a user through control interface **1058** and display interface **1056** coupled to a display **1054**. The display **1054** may be, for example, a TFT LCD (Thin-Film-Transistor Liquid Crystal Display) or an OLED (Organic Light Emitting Diode) display, or other appropriate display technology. The display interface **1056** may comprise appropriate circuitry for driving the display **1054** to present graphical and other information to a user. The control interface **1058** may receive commands from a user and convert them for submission to the processor **1052**. In addition, an external interface **1062** may be provide in communication with processor **1052**, so as to enable near area communication of device **1050** with other devices. External interface **1062** may provide, for example, for wired communication in some implementations, or for wireless communication in other implementations, and multiple interfaces may also be used.

The memory **1064** stores information within the computing device **1050**. The memory **1064** can be implemented as one or more of a computer-readable medium or media, a volatile memory unit or units, or a non-volatile memory unit or units. Expansion memory **1074** may also be provided and connected to device **1050** through expansion interface **1072**, which may include, for example, a SIMM (Single In Line Memory Module) card interface. Such expansion memory **1074** may provide extra storage space for device **1050**, or may also store applications or other information for device **1050**. Specifically, expansion memory **1074** may include instructions to carry out or supplement the processes described above, and may include secure information also. Thus, for example, expansion memory **1074** may be provide as a security module for device **1050**, and may be programmed with instructions that permit secure use of device **1050**. In addition, secure applications may be provided via the SIMM cards, along with additional information, such as placing identifying information on the SIMM card in a non-hackable manner.

The memory may include, for example, flash memory and/or NVRAM memory, as discussed below. In one implementation, a computer program product is tangibly embodied in an information carrier. The computer program product contains instructions that, when executed, perform one or more methods, such as those described above. The information carrier is a computer- or machine-readable medium, such as the memory **1064**, expansion memory **1074**, memory on processor **1052**, or a propagated signal that may be received, for example, over transceiver **1068** or external interface **1062**.

Device **1050** may communicate wirelessly through communication interface **1066**, which may include digital signal processing circuitry where necessary. Communication interface **1066** may provide for communications under various modes or protocols, such as GSM voice calls, SMS, EMS, or MMS messaging, CDMA, TDMA, PDC, WCDMA, CDMA2000, or GPRS, among others. Such communication may occur, for example, through radio-frequency transceiver **1068**. In addition, short-range communication may occur, such as using a Bluetooth, WiFi, or other such transceiver (not shown). In addition, GPS (Global Positioning System) receiver module **1070** may provide additional navigation- and location-related wireless data to device **1050**, which may be used as appropriate by applications running on device **1050**.

Device **1050** may also communicate audibly using audio codec **1060**, which may receive spoken information from a user and convert it to usable digital information. Audio codec **1060** may likewise generate audible sound for a user, such as through a speaker, e.g., in a handset of device **1050**. Such sound may include sound from voice telephone calls, may include recorded sound (e.g., voice messages, music files, etc.) and may also include sound generated by applications operating on device **1050**.

The computing device **1050** may be implemented in a number of different forms, as shown in the figure. For example, it may be implemented as a cellular telephone **1080**. It may also be implemented as part of a smartphone **1082**, personal digital assistant, or other similar mobile device.

Various implementations of the systems and techniques described here can be realized in digital electronic circuitry, integrated circuitry, specially designed ASICs (application specific integrated circuits), computer hardware, firmware, software, and/or combinations thereof. These various implementations can include implementation in one or more computer programs that are executable and/or interpretable on a programmable system including at least one programmable processor, which may be special or general purpose, coupled to receive data and instructions from, and to transmit data and instructions to, a storage system, at least one input device, and at least one output device.

These computer programs (also known as programs, software, software applications or code) include machine instructions for a programmable processor, and can be implemented in a high-level procedural and/or object-oriented programming language, and/or in assembly/machine language. As used herein, the terms "machine-readable medium" "computer-readable medium" refers to any computer program product, apparatus and/or device (e.g., magnetic discs, optical disks, memory, Programmable Logic Devices (PLDs)) used to provide machine instructions and/or data to a programmable processor, including a machine-readable medium that receives machine instructions as a machine-readable signal.

The term "machine-readable signal" refers to any signal used to provide machine instructions and/or data to a programmable processor.

To provide for interaction with a user, the systems and techniques described here can be implemented on a computer having a display device (e.g., a CRT (cathode ray tube) or LCD (liquid crystal display) monitor) for displaying information to the user and a keyboard and a pointing device (e.g., a mouse or a trackball) by which the user can provide input to the computer. Other kinds of devices can be used to provide for interaction with a user as well; for example, feedback provided to the user can be any form of sensory feedback (e.g., visual feedback, auditory feedback, or tactile feedback); and input from the user can be received in any form, including acoustic, speech, or tactile input.

The systems and techniques described here can be implemented in a computing system that includes a back end component (e.g., as a data server), or that includes a middleware component (e.g., an application server), or that includes a front end component (e.g., a client computer having a graphical user interface or a Web browser through which a user can interact with an implementation of the systems and techniques described here), or any combination of such back end, middleware, or front end components. The components of the system can be interconnected by any form or medium of digital data communication (e.g., a communication network). Examples of communication networks include a local area network ("LAN"), a wide area network ("WAN"), and the Internet.

The computing system can include clients and servers. A client and server are generally remote from each other and typically interact through a communication network. The relationship of client and server arises by virtue of computer programs running on the respective computers and having a client-server relationship to each other.

A number of implementations have been described. Nevertheless, it will be understood that various modifications may be made without departing from the spirit and scope of the disclosed implementations. For example, interactive indicators can be provided for various mobile devices, even though the examples and figures herein generally relate to mobile communication devices (e.g., smartphones). Moreover, interactive indicators can be provided for other devices that are not traditionally characterized as mobile devices—particularly devices that have a touch-sensitive display. In particular, for example, dash-mounted vehicle navigation systems, and display-equipped consumer appliances (e.g., washers, dryers, dishwashers, microwaves, refrigerators, wine cabinets, coffee makers, etc) can also provide interactive indicators. The interactive indicators can be associated with virtually any application, in addition to those applications described above. Two or three levels of detail are described, but other numbers of levels of detail can be provided as well. Example methods of providing interactive indicator information have been described (e.g., scrolling messages, pop-up windows, etc.), but the reader will appreciate that the principles described herein can be applied to other methods of providing interactive indicators. Accordingly, other implementations are within the scope of the following claims.

What is claimed is:

1. A computer-implemented method for displaying alert information, the method comprising:

in a mobile computing device having a touch-sensitive display screen, displaying device status indicators to a user of the computing device in a status area of a graphical user interface on the touch-sensitive display screen, wherein the status area (a) displays a plurality of icons that indicate current statuses of different parameters for the computing device, and (b) is defined by a status area periphery that spatially separates the status area from an application area of the graphical user interface that displays one or more applications executing on the computing device;

receiving information from an application to display an alert in the status area;

displaying in the status area and contained within the status area periphery a first level of textual information for the alert and a user-selectable control;

displaying, in response to user selection input selecting the user-selectable control, a second level of information for the alert that provides greater detail than the first level of textual information, wherein the user selection input is received through user contact with the touch-sensitive display screen, and wherein the first level of textual information displayed in the status area and contained within the status area periphery includes text that describes the second level of information; and

in response to additional user selection input selecting the second level of information, activating an application associated with the received information, wherein the application is focused on a third level of information for the alert that provides greater detail than the first level or second level of information, wherein the additional user selection input is received through user contact with the touch-sensitive display screen.

2. A computer-implemented method for displaying alert information with a mobile computing device, the method comprising:

displaying device status indicators that indicate current statuses of different parameters for the computing device to a user of a mobile device in a status area of a graphical user interface on a display screen of the computing device;

receiving information from an application to display an alert in the status area, the status area defined by a status area periphery that spatially separates the status area from an application area of the graphical user interface that displays one or more applications executing on the computing device;

displaying in the status area and contained within the status area periphery a first level of textual information for the alert and a user-selectable control; and

displaying, in response to a selection of the user-selectable control, a second level of information for the alert that provides greater detail than the first level of textual information, wherein the first level of textual information displayed in the status area and contained within the status area periphery includes text that describes the second level of information.

3. The computer-implemented method of claim **2**, further comprising superimposing the first level of textual information over the device status indicators.

4. The computer-implemented method of claim **3**, wherein superimposing the first level of textual information over the device status indicators includes scrolling the first level of information through the status area over the device status indicators.

5. The computer-implemented method of claim **2**, wherein the first level of textual information includes preview content related to the second level of information.

6. The computer-implemented method of claim **5**, further comprising removing the preview content after a user review period.

7. The computer-implemented method of claim 2, further comprising increasing a size of the user-selectable control while the user-selectable control is being selected and permitting selection of another user-selectable control by movement of a selector.

8. The computer-implemented method of claim 7, wherein increasing the size of the user-selectable control comprises increasing the size of the user-selectable control one or more times, to a predetermined maximum size, while the user-selectable control remains selected.

9. The computer-implemented method of claim 2, wherein the second level of information is displayed in a pop-up box near the user-selectable control.

10. The computer-implemented method of claim 2, further comprising activating an application associated with the received information, wherein the application is focused on a third level of information for the alert that provides greater detail than the first level or second level of information.

11. The computer-implemented method of claim 10, wherein activating the application comprises activating the application in response to a selection of the second level of information.

12. The computer-implemented method of claim 10, wherein the first level of textual information comprises a short message service (SMS) snippet, the second level of information comprises an SMS message, and the application comprises an SMS message manager.

13. The computer-implemented method of claim 10, wherein the first level of textual information comprises an electronic mail snippet, the second level of information comprises an electronic mail message portion that is larger than the snippet, and the application comprises an electronic mail application.

14. A computer-implemented mobile device alert management system, comprising:

an interface configured to receive status alert information from applications on a mobile device;

an alert management module configured to receive the status alert information from the interface and provide multiple levels of detail of the status alert information; and

a display module configured to receive the multiple levels of detail of the status alert information and to display to a user of the mobile device at least a first level of detail of the status alert information in a device display status area of the mobile device, the status area (a) displaying a plurality of icons that indicate current statuses of different parameters for the mobile device, and (b) defined by a status area periphery that spatially separates the status area from an application area that displays one or more applications executing on the mobile device, wherein the display of the first level of detail is contained within the status area periphery and includes text that describes a second level of detail of the multiple levels of detail of the status alert information.

15. The computer-implemented mobile device alert management system of claim 14, wherein the alert management module is configured to initially present the first level of detail of the alert information and to present the second level of detail when selection input is received, the selection input indicating that the first level of detail has been selected.

16. The computer-implemented mobile device alert management system of claim 14, wherein the interface is configured to activate an application associated with the status alert information when additional selection input has been received, the additional selection input indicating that the second level of detail has been selected.

17. The computer-implemented mobile device alert management system of claim 14, further comprising a touch-sensitive input device configured to receive the selection input.

18. The computer-implemented mobile device alert management system of claim 14, wherein the interface is configured to prevent the display module from being directly accessed by the applications.

19. The computer-implemented mobile device alert management system of claim 18, wherein the interface is configured to receive the status alert information from an application and initiate a protected function call that incorporates at least a portion of the received status alert information, wherein the protected function call is not directly accessible to the applications.

20. The computer-implemented mobile device alert management system of claim 14, further comprising a static indicator module configured to display in the status area the plurality of icons that indicate current statuses of different parameters for the mobile device, wherein the plurality of icons includes at least one of an indication of remaining on-board power in the mobile device or an indication of signal strength of a wireless channel over which the mobile device sends and receives information.

21. The computer-implemented mobile device alert management system of claim 20, wherein the display module is configured to display the alert information in the status area of the mobile device in a manner that is more prominent than the plurality of icons during a user-review period.

22. A computer-implemented mobile device alert management system, comprising:

an interface configured to receive status alert information from applications on a mobile device;

an alert management means for receiving the status alert information from the interface and providing multiple levels of detail of the status alert information; and

a display module configured to receive the multiple levels of detail of the status alert information and to display to a user of the mobile device at least a first level of detail of the status alert information in a device display status area of the mobile device, the status area (a) displaying a plurality of icons that indicate current statuses of different parameters for the mobile device, and (b) defined by a status area periphery that spatially separates the status area from an application area that displays one or more applications executing on the mobile device, wherein the display of the first level of detail is contained within the status area periphery and includes text that describes a second level of detail of the multiple levels of detail of the status alert information.

23. The computer-implemented method of claim 1, wherein the status area is in the form of a status bar that includes slots for displaying icons that represent a device battery level and a status of one or more network connections.

24. The computer-implemented method of claim 1, wherein display of the icons is replaced with display of the first level of textual information for a temporary period after the information to display the alert is received.

25. The computer-implemented method of claim 1, wherein the status area periphery spans across the display screen.

* * * * *