US008649824B2

(12) **United States Patent**
Choi

(10) **Patent No.: US 8,649,824 B2**
(45) **Date of Patent: *Feb. 11, 2014**

(54) **TERMINAL AND METHOD OF CONTROLLING THE SAME**

(75) Inventor: **Kyung Dong Choi**, Bucheon-si (KR)

(73) Assignee: **LG Electronics Inc.**, Seoul (KR)

(*) Notice: Subject to any disclaimer, the term of this patent is extended or adjusted under 35 U.S.C. 154(b) by 823 days.

This patent is subject to a terminal disclaimer.

(21) Appl. No.: **12/464,469**

(22) Filed: **May 12, 2009**

(65) **Prior Publication Data**

US 2009/0298537 A1 Dec. 3, 2009

(30) **Foreign Application Priority Data**

May 29, 2008 (KR) 10-2008-0050460

(51) **Int. Cl.**

H04M 1/00	(2006.01)
G09G 3/18	(2006.01)
G09G 3/14	(2006.01)
G09G 3/34	(2006.01)

(52) **U.S. Cl.**

USPC **455/566**; 345/38; 345/39; 345/108; 345/111

(58) **Field of Classification Search**

USPC 455/566

See application file for complete search history.

(56) **References Cited**

U.S. PATENT DOCUMENTS

5,160,920	A	11/1992	Harris	
5,469,185	A	11/1995	Lebby et al.	
5,798,744	A	8/1998	Tanaka et al.	
5,801,758	A	9/1998	Heirich	
5,896,575	A	4/1999	Higginbotham et al.	
6,132,048	A	10/2000	Gao et al.	
6,327,482	B1	12/2001	Miyashita	
6,466,202	B1	10/2002	Suso et al.	
6,662,244	B1	12/2003	Takahashi	
6,753,842	B1	6/2004	Williams et al.	
6,998,772	B2	2/2006	Terumoto	
7,205,959	B2	4/2007	Henriksson	
7,420,585	B2	9/2008	Fredlund et al.	
7,460,108	B2	12/2008	Tamura	
7,504,770	B2	3/2009	Choong	
7,532,173	B2	5/2009	Yamazaki et al.	
7,573,522	B2 *	8/2009	Kim	348/333.01
7,724,208	B1	5/2010	Engel et al.	
7,738,912	B1	6/2010	Hawkins et al.	
7,876,288	B1	1/2011	Huang	
8,022,977	B2	9/2011	Kanade et al.	
2002/0094846	A1	7/2002	Kishimoto et al.	

(Continued)

FOREIGN PATENT DOCUMENTS

CN	1295316 A	5/2001
CN	1517972 A	8/2004

(Continued)

Primary Examiner — Huy C Ho

(74) *Attorney, Agent, or Firm* — Birch, Stewart, Kolasch & Birch, LLP

(57) **ABSTRACT**

A terminal and method of controlling the same are disclosed, by which user's convenience for photography using a terminal can be further enhanced. The terminal includes a camera, a display, a user input having a camera shutter key, and a controller for controlling at least one of more menu icons displayed in a standby mode to be displayed by being overlapped with a camera preview image. A see-through image seen through a transparent display can become a camera preview image.

21 Claims, 71 Drawing Sheets

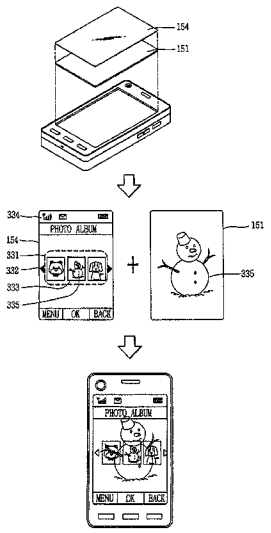

GOOGLE EXHIBIT 1006

(56) **References Cited**

U.S. PATENT DOCUMENTS

2004/0017524	A1	1/2004	Li	
2004/0100510	A1	5/2004	Milic-Frayling et al.	
2004/0189630	A1	9/2004	Huh et al.	
2004/0214612	A1	10/2004	Park et al.	
2004/0240056	A1	12/2004	Tomisawa et al.	
2004/0257473	A1	12/2004	Miyagawa	
2005/0001796	A1	1/2005	Liu	
2005/0012842	A1	1/2005	Miyagawa et al.	
2005/0024339	A1	2/2005	Yamazaki et al.	
2005/0030518	A1	2/2005	Nishi et al.	
2005/0037815	A1	2/2005	Besharat et al.	
2005/0078227	A1	4/2005	Kobayashi et al.	
2005/0083642	A1	4/2005	Senpuku et al.	
2005/0117096	A1	6/2005	Voloschenko et al.	
2005/0183040	A1	8/2005	Kondo et al.	
2005/0251760	A1	11/2005	Sato et al.	
2005/0264984	A1	12/2005	Lee	
2006/0044286	A1	3/2006	Kohlhaas et al.	
2006/0044399	A1	3/2006	Fredlund et al.	
2006/0079302	A1*	4/2006	Kota et al.	455/575.3
2006/0280363	A1	12/2006	Umeda	
2007/0002130	A1	1/2007	Hartkop	
2007/0013871	A1	1/2007	Marshall et al.	
2007/0075915	A1	4/2007	Cheon et al.	
2007/0078598	A1	4/2007	Watanabe et al.	
2007/0188439	A1	8/2007	Kimura et al.	
2007/0188450	A1	8/2007	Hernandez et al.	
2007/0287506	A1*	12/2007	Kim et al.	455/566
2008/0066109	A1	3/2008	Dunning et al.	
2008/0106591	A1	5/2008	Border et al.	
2008/0129719	A1	6/2008	Jonsson et al.	
2008/0204438	A1	8/2008	Song et al.	
2008/0220821	A1*	9/2008	Okuzako et al.	455/566
2009/0009628	A1	1/2009	Janicek	
2009/0091513	A1	4/2009	Kuhn	
2009/0231244	A1	9/2009	Lee	
2009/0298546	A1	12/2009	Kim et al.	
2010/0039350	A1	2/2010	Wakefield et al.	
2010/0039372	A1	2/2010	Futter	
2010/0060587	A1	3/2010	Freund	
2010/0222110	A1	9/2010	Kim et al.	
2011/0171942	A1	7/2011	Kokubo	
2013/0044097	A1	2/2013	Kim et al.	

FOREIGN PATENT DOCUMENTS

CN	1551596	A	12/2004
CN	1574904	A	2/2005
CN	1610874	A	4/2005
CN	1949530	A	4/2007
CN	101021766	A	8/2007
EP	0967511	A1	12/1999
EP	1 100 067	A2	5/2001
EP	1298909	A1	4/2003
EP	1510994	A1	3/2005
EP	1770473	A2	4/2007
EP	1804113	A1	7/2007
EP	1843563	A1	10/2007
JP	61021561	A	1/1986
KR	10-0630162	B1	12/2005
WO	WO-98/38822	A1	9/1998
WO	WO 2007/047685	A2	4/2007
WO	WO 2007/138543	A2	12/2007

* cited by examiner

FIG. 1

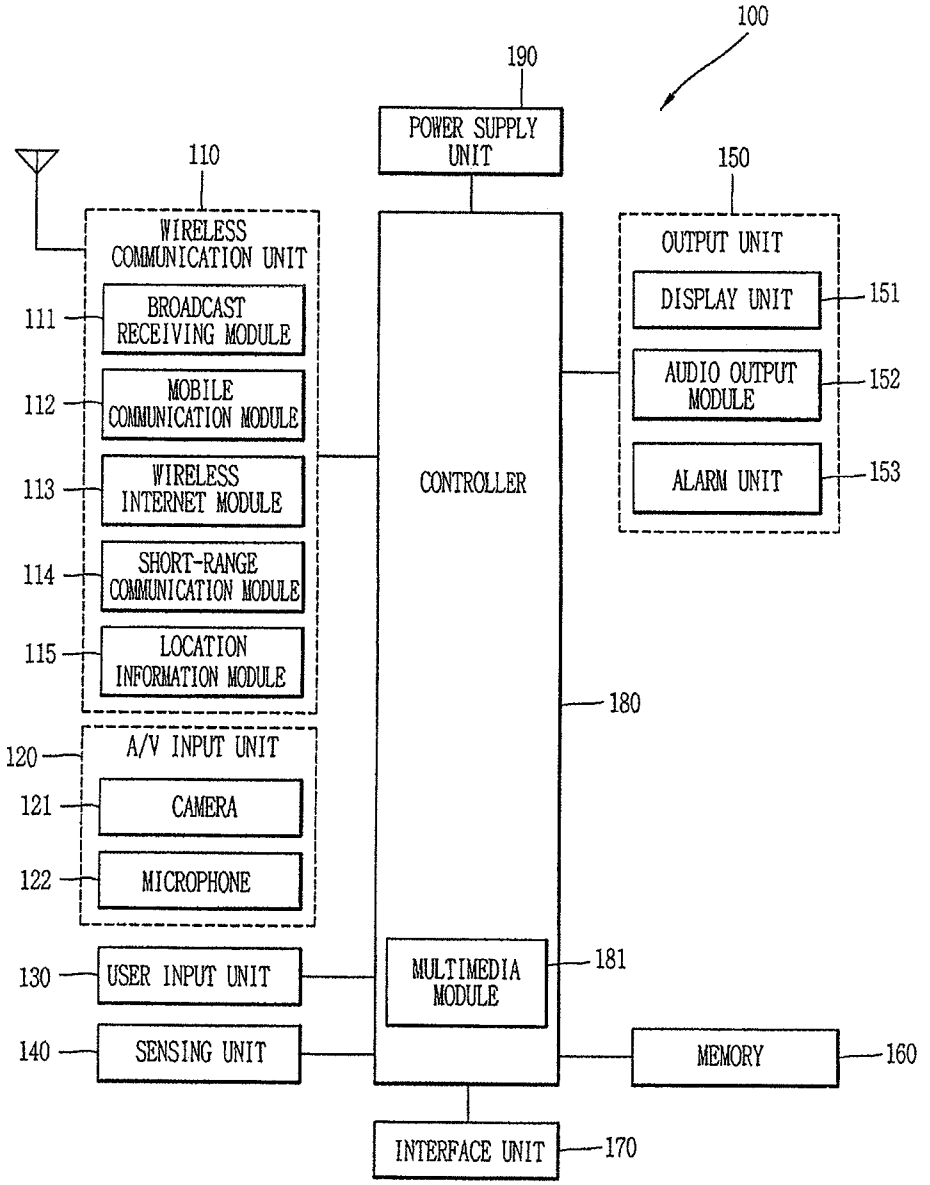
100
190
POWER SUPPLY UNIT
110
WIRELESS COMMUNICATION UNIT
111
BROADCAST RECEIVING MODULE
112
MOBILE COMMUNICATION MODULE
113
WIRELESS INTERNET MODULE
114
SHORT-RANGE COMMUNICATION MODULE
115
LOCATION INFORMATION MODULE
120
A/V INPUT UNIT
121
CAMERA
122
MICROPHONE
130
USER INPUT UNIT
140
SENSING UNIT
CONTROLLER
MULTIMEDIA MODULE
181
180
150
OUTPUT UNIT
DISPLAY UNIT
151
AUDIO OUTPUT MODULE
152
ALARM UNIT
153
MEMORY
160
INTERFACE UNIT
170

FIG. 2

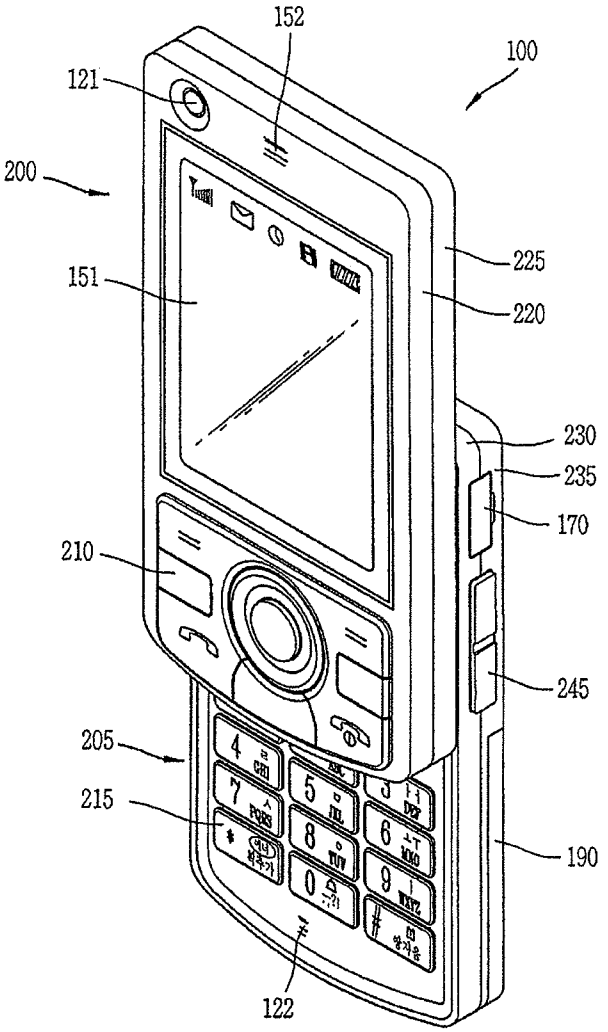

FIG. 3

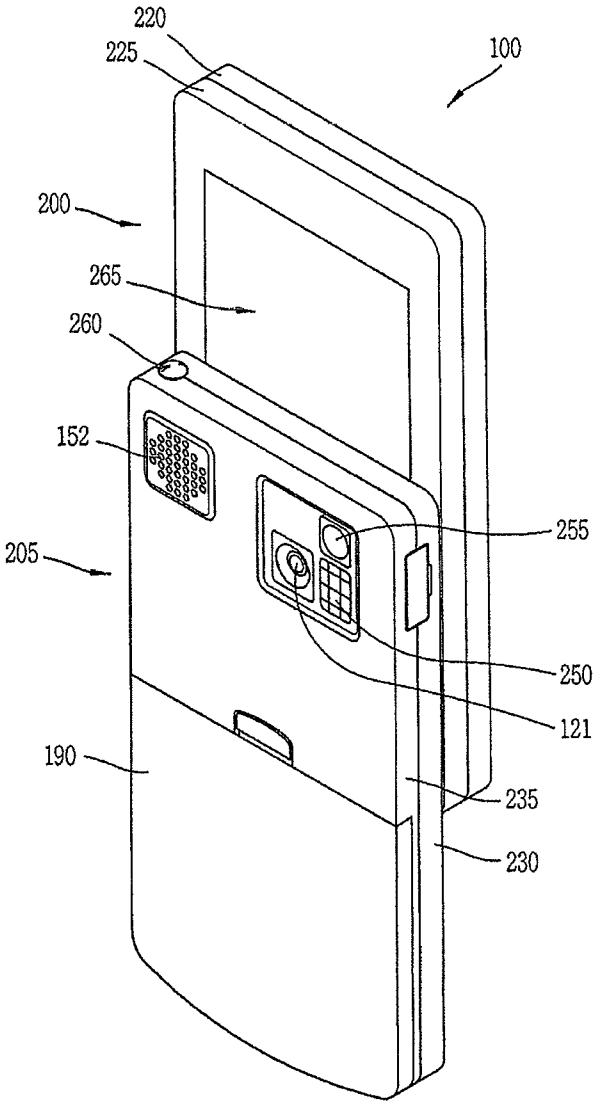

FIG. 4

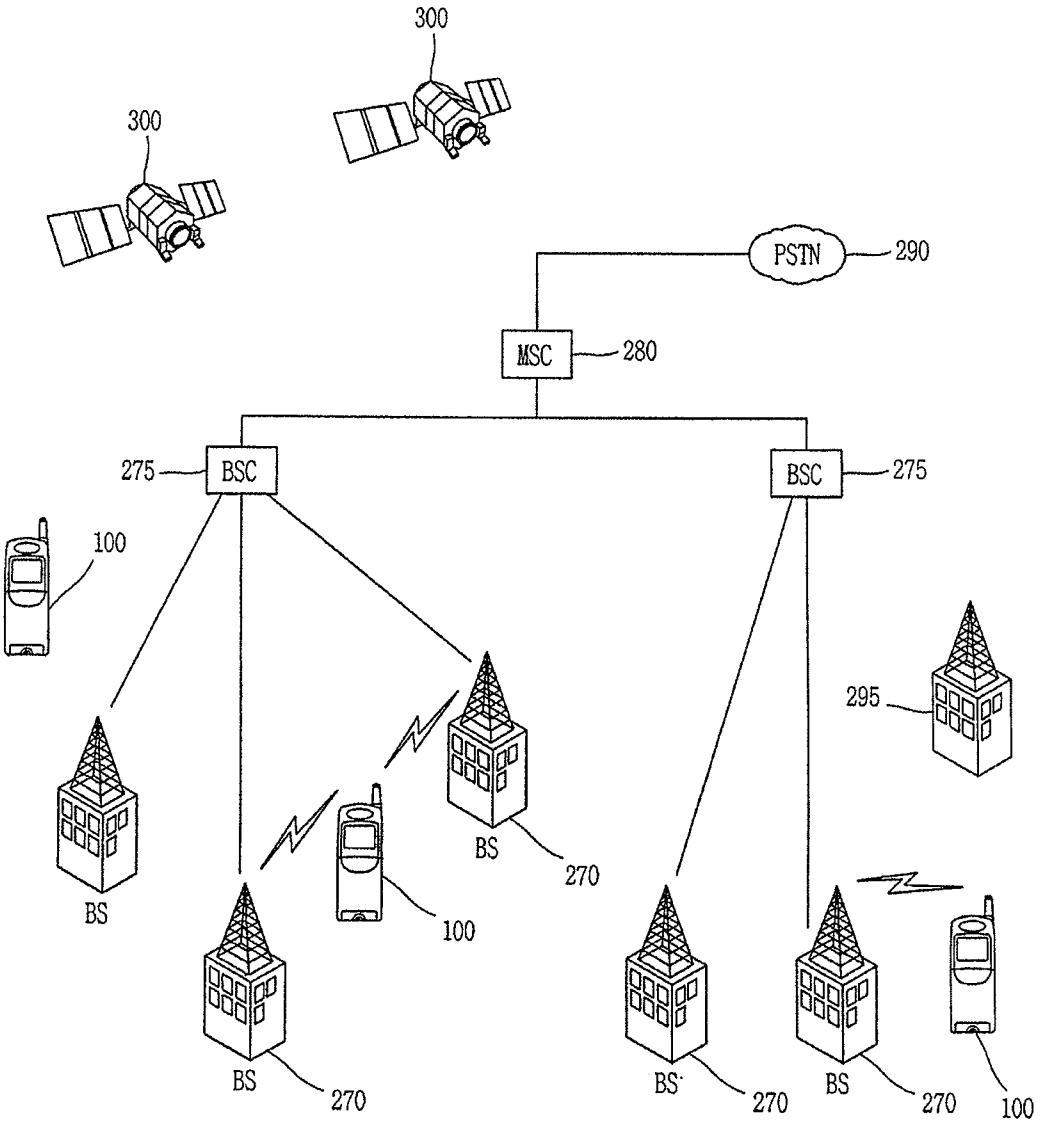
300
300
PSTN
290
MSC
280
275
BSC
BSC
275
100
295
BS
BS
270
100
BS
270
BS
270
BS
270
100

FIG. 5

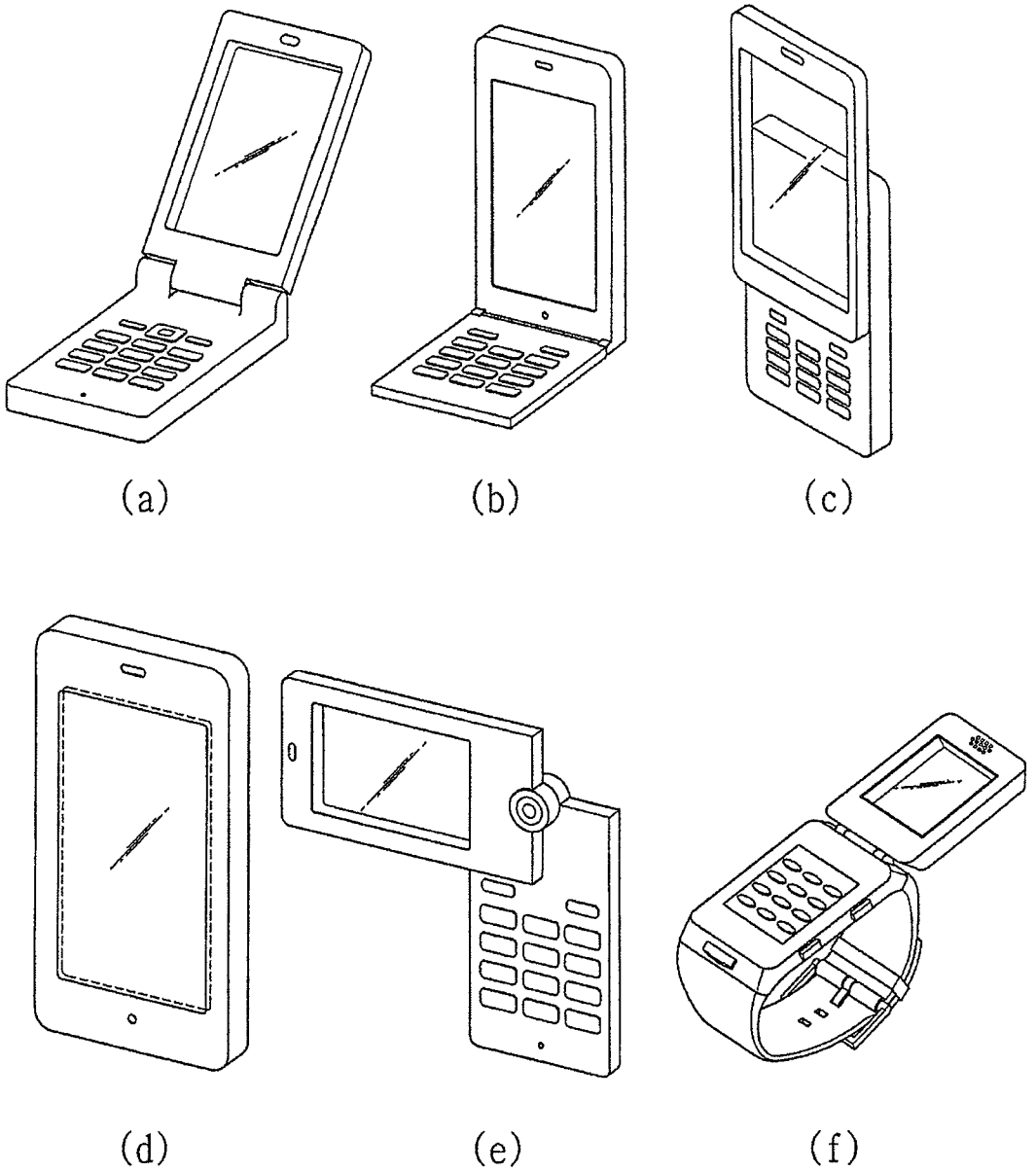

FIG. 6

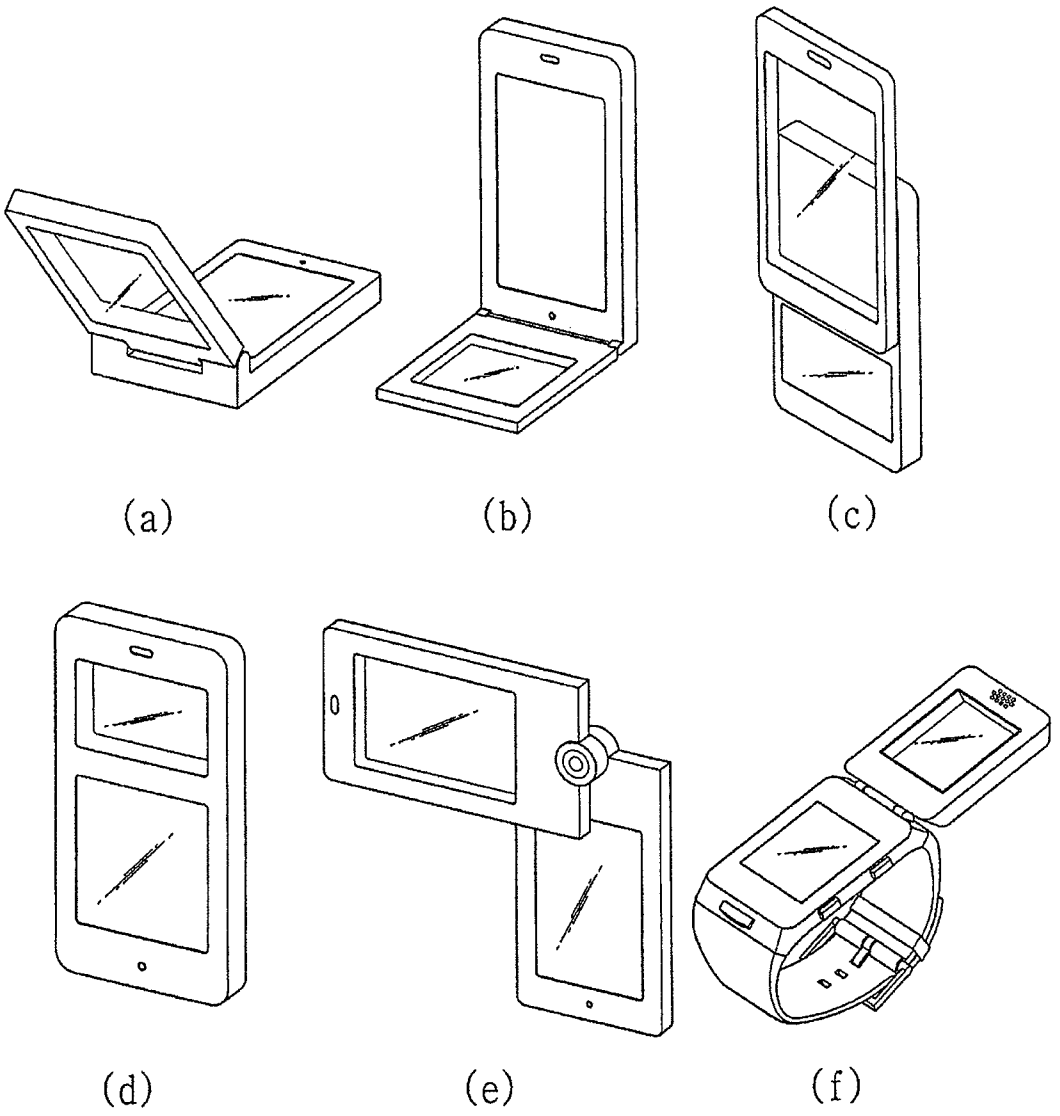

FIG. 7A

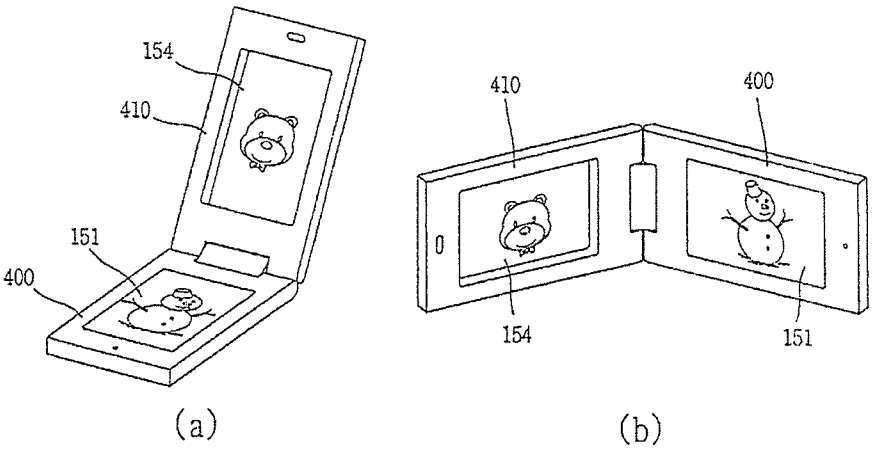
154
410
151
400
410
400
154
151
(a)
(b)

FIG. 7B

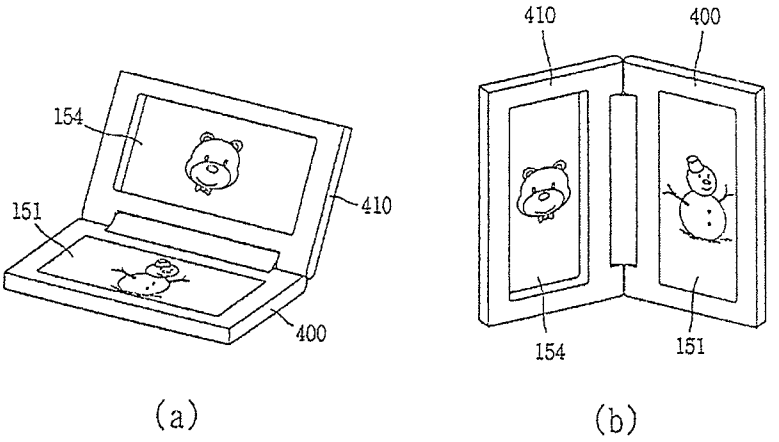
154
151
410
400
410
400
154
151
(a)
(b)

FIG. 8

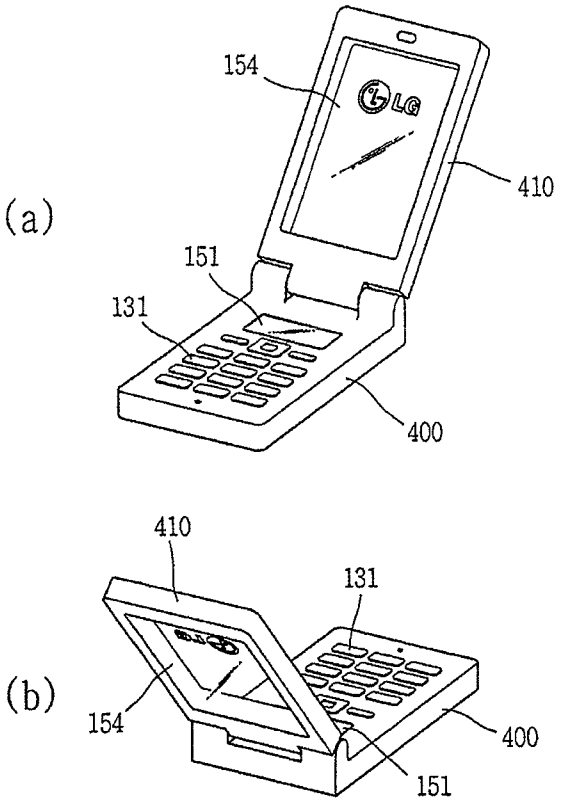

FIG. 9

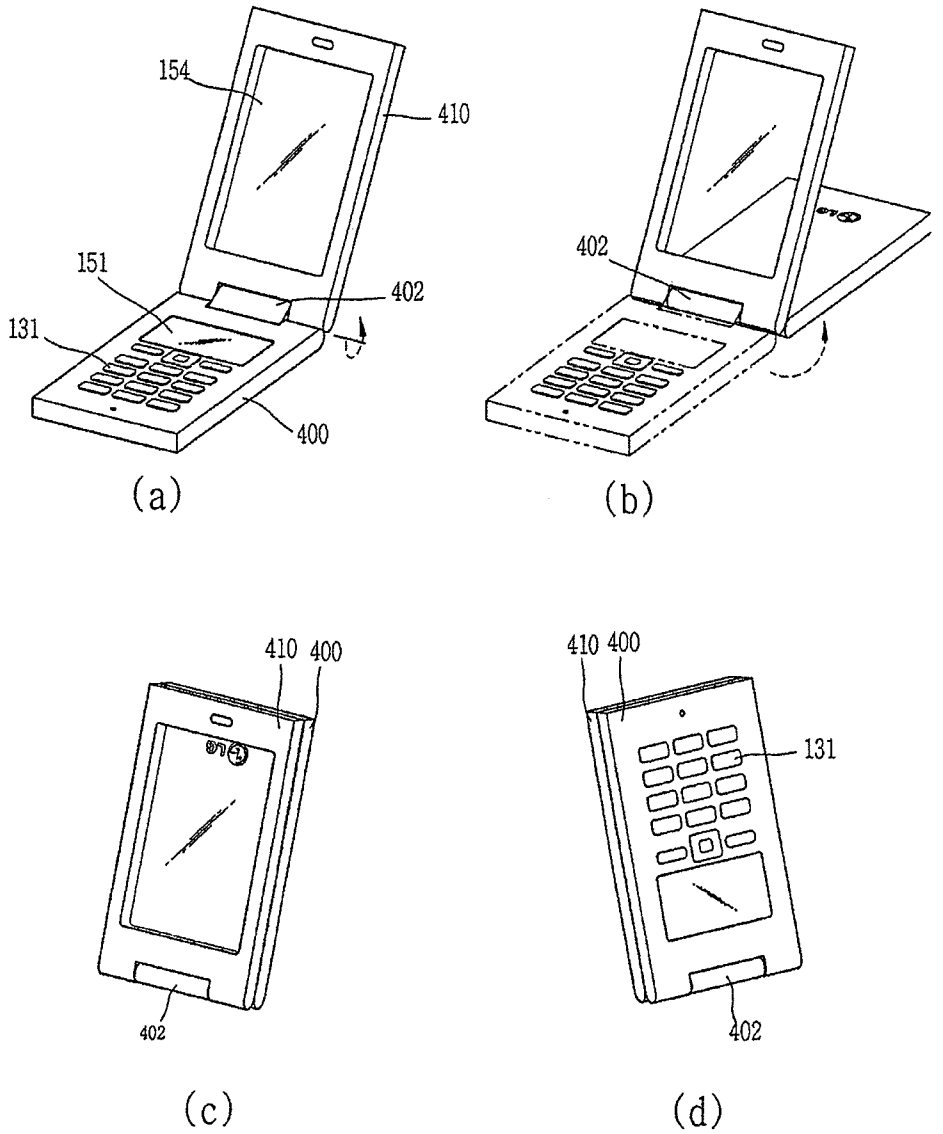

FIG. 10

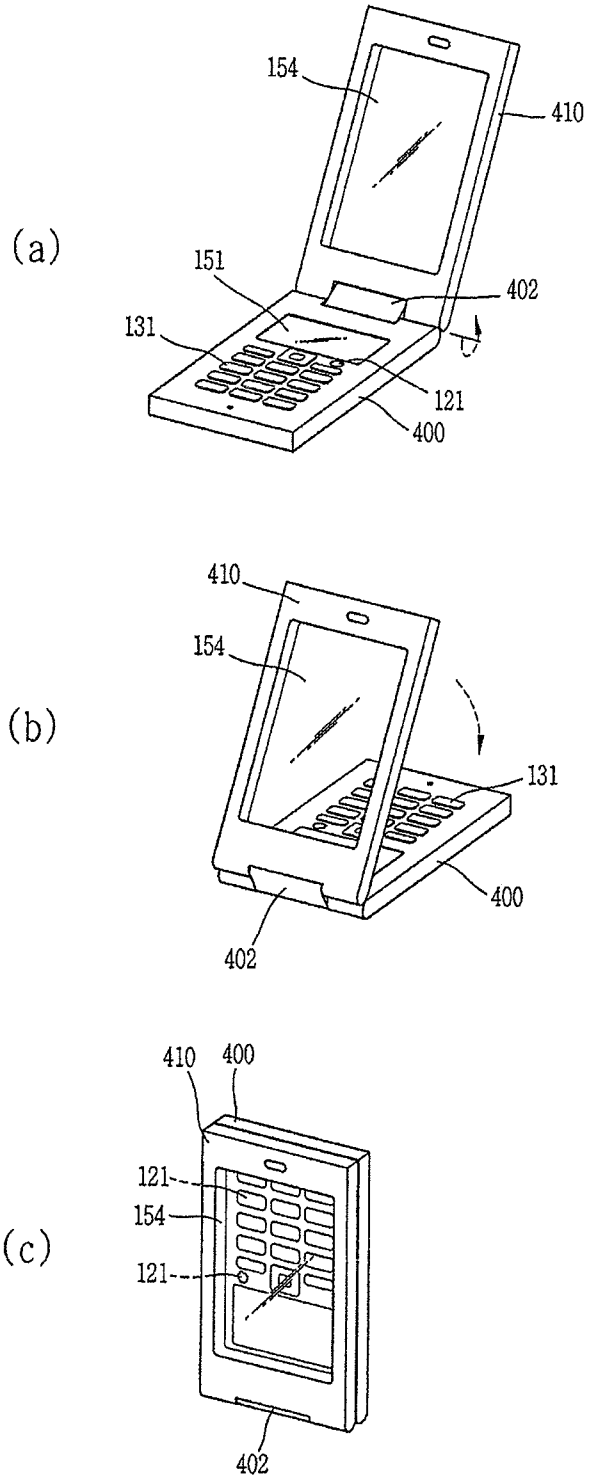
(a)
154
410
151
402
131
121
400
(b)
410
154
131
400
402
(c)
410
400
121
154
121
402

FIG. 11

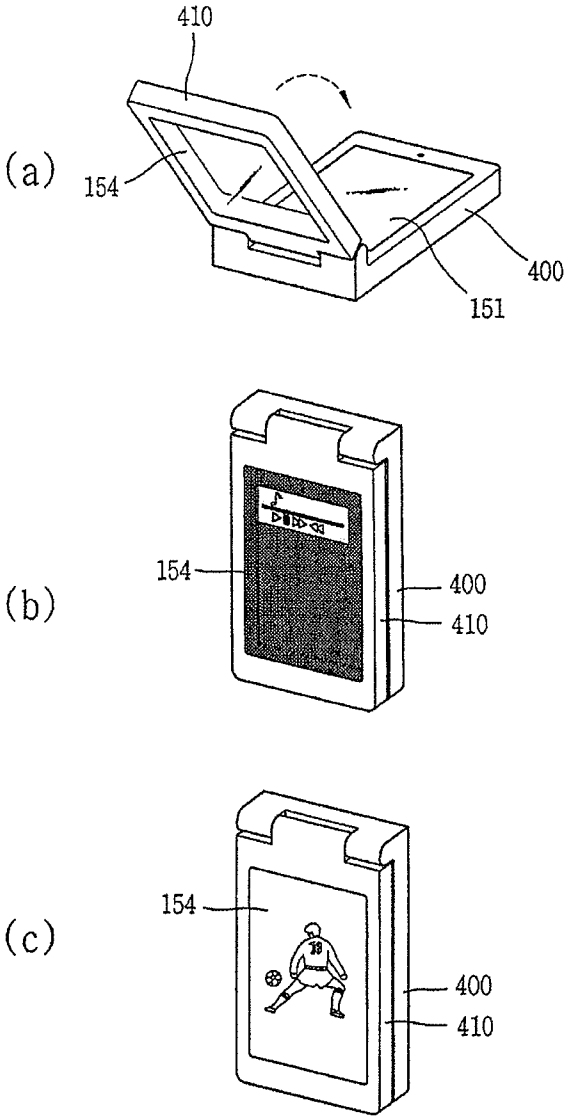

FIG. 12A

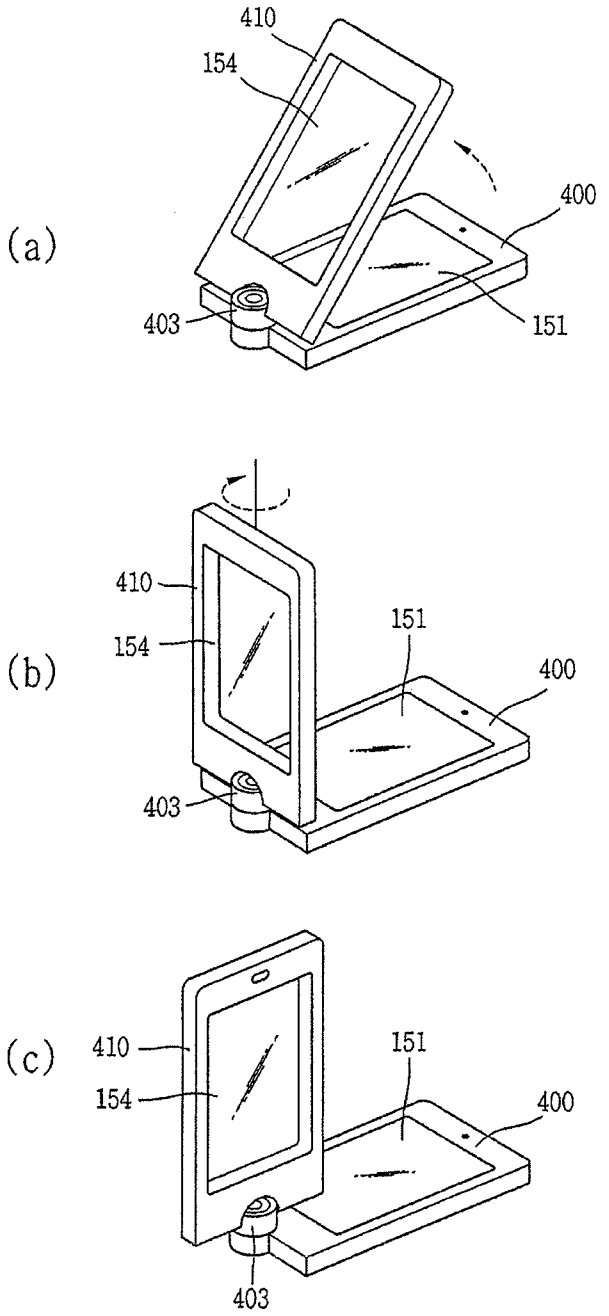

FIG. 12B

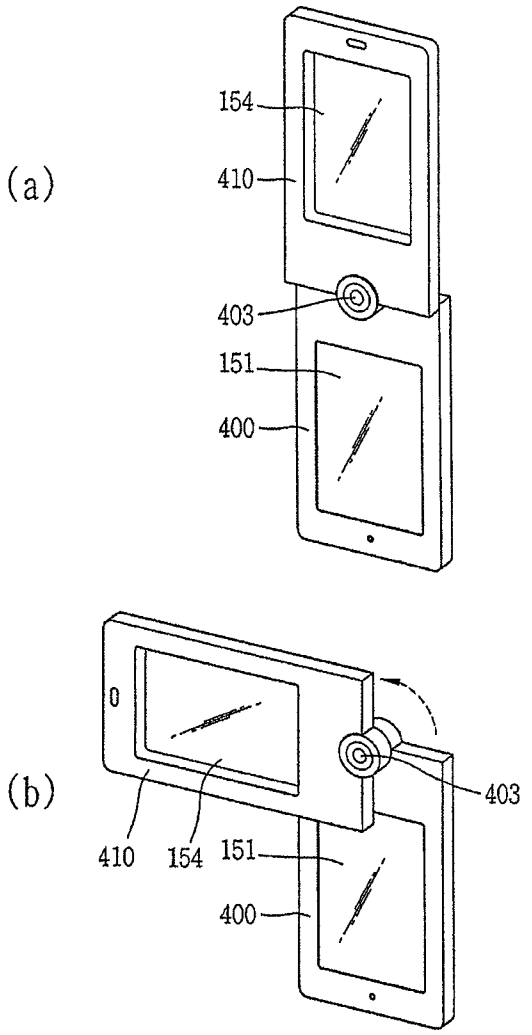

FIG. 13

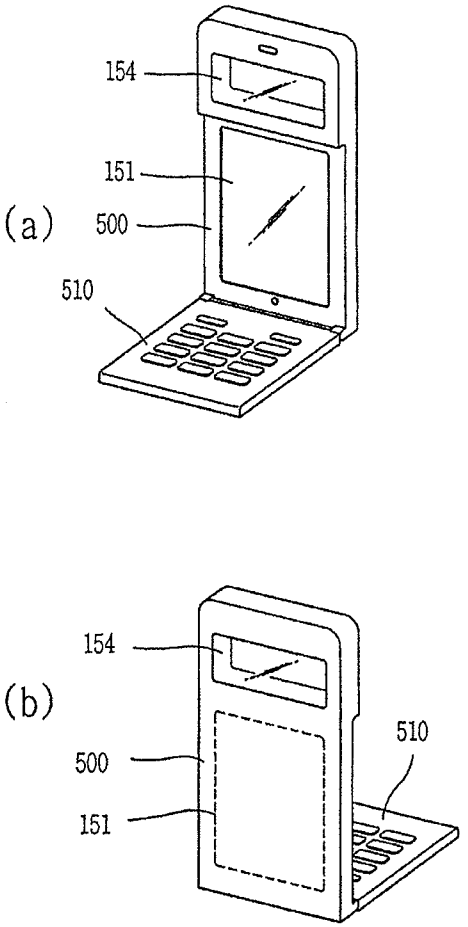

FIG. 14

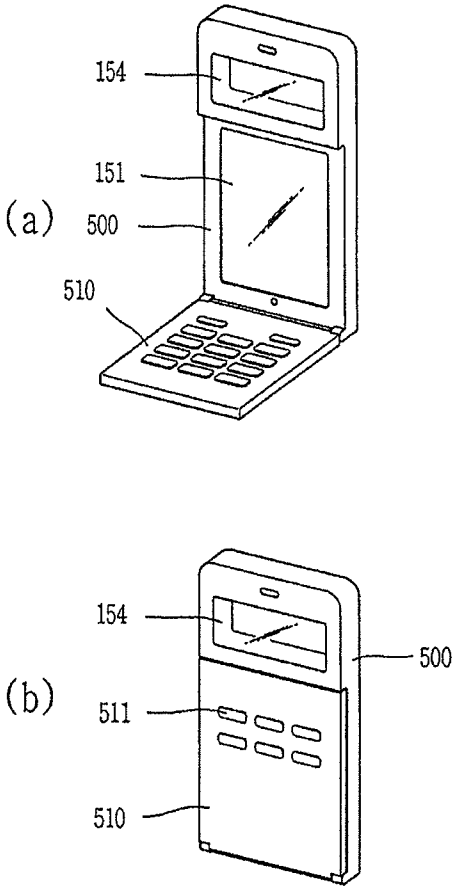

FIG. 15

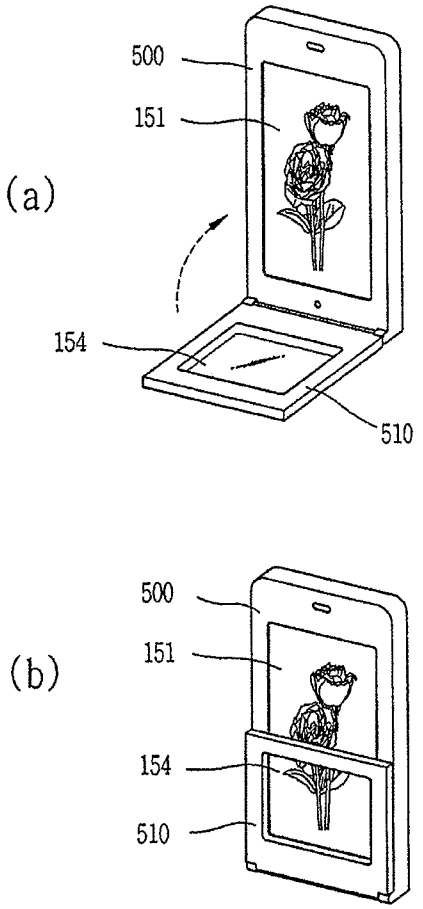

FIG. 16

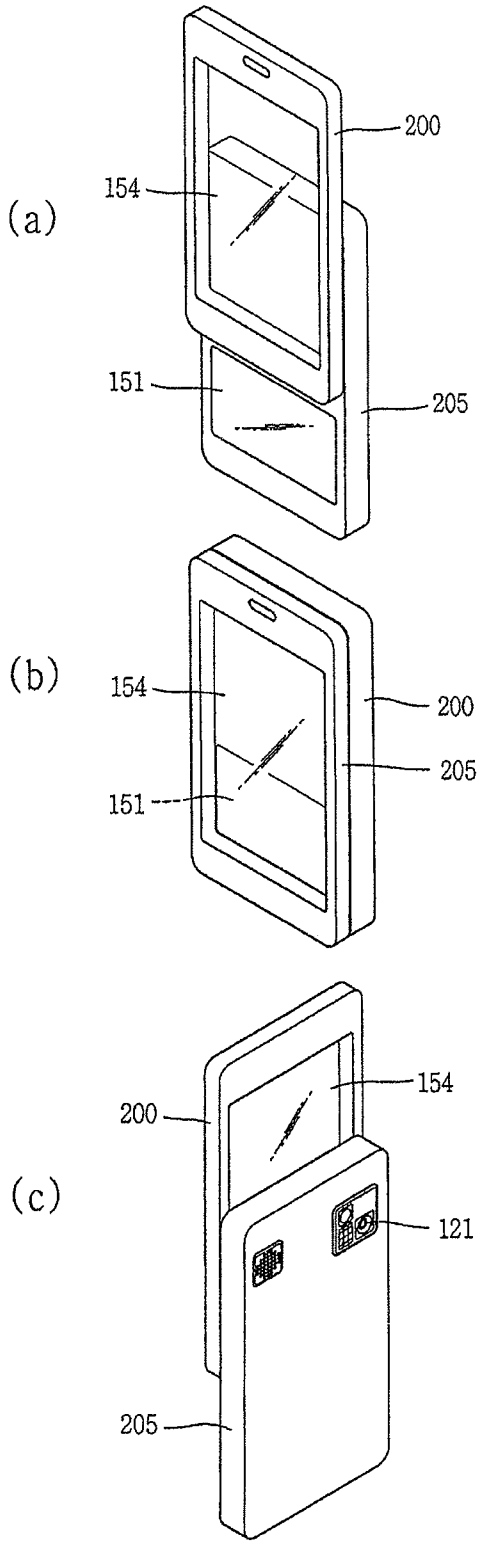

FIG. 17

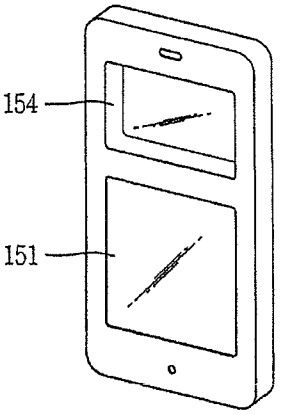

FIG. 18

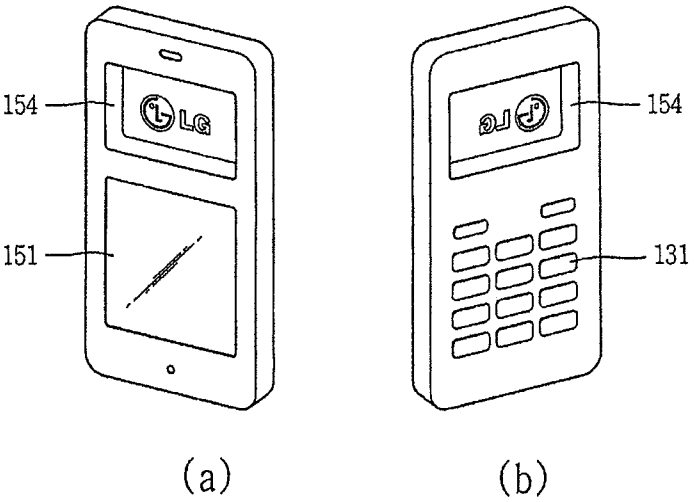

FIG. 19

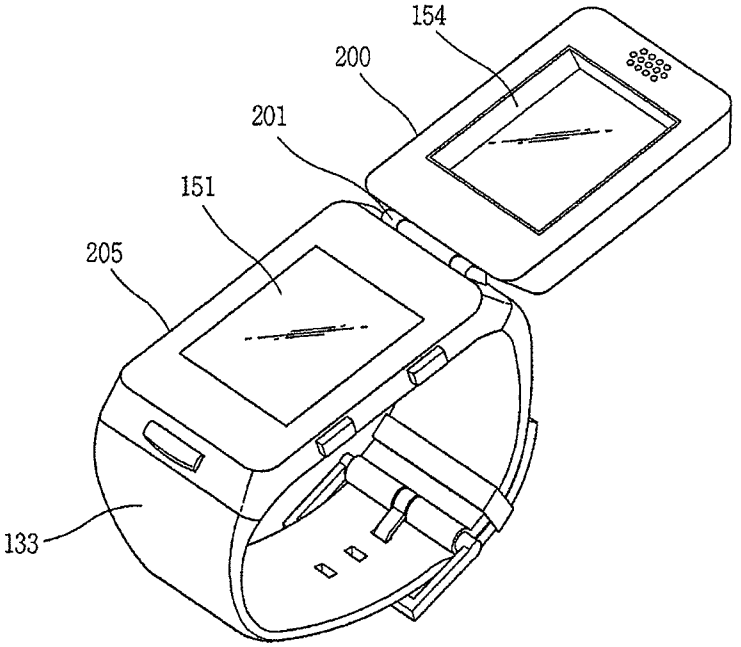

FIG. 20

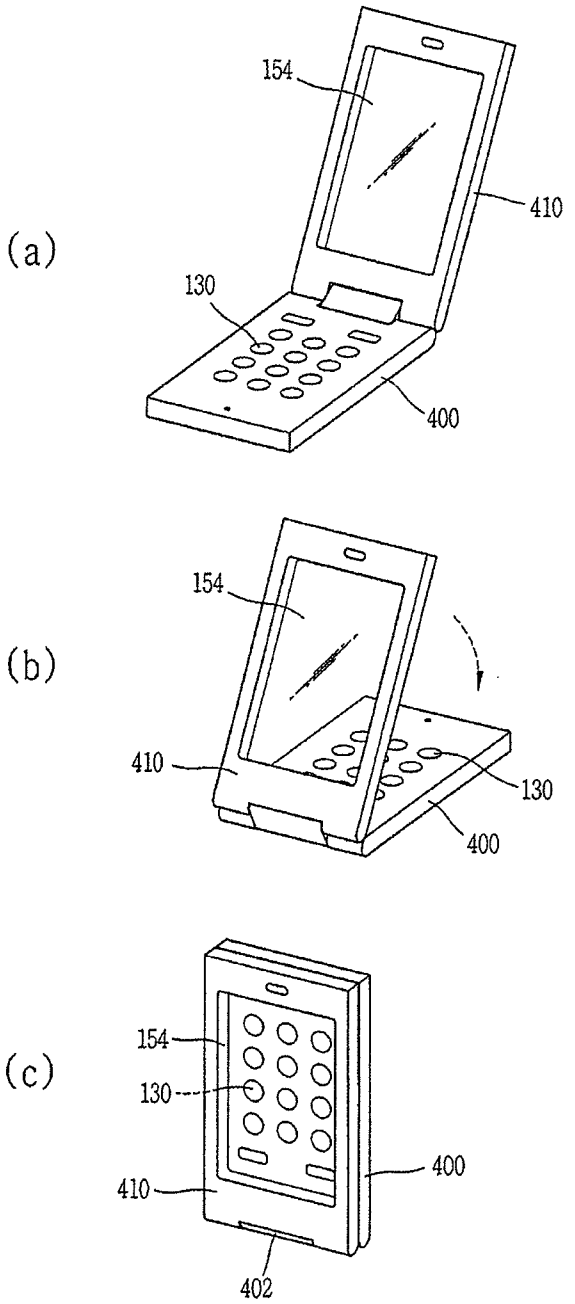

FIG. 21

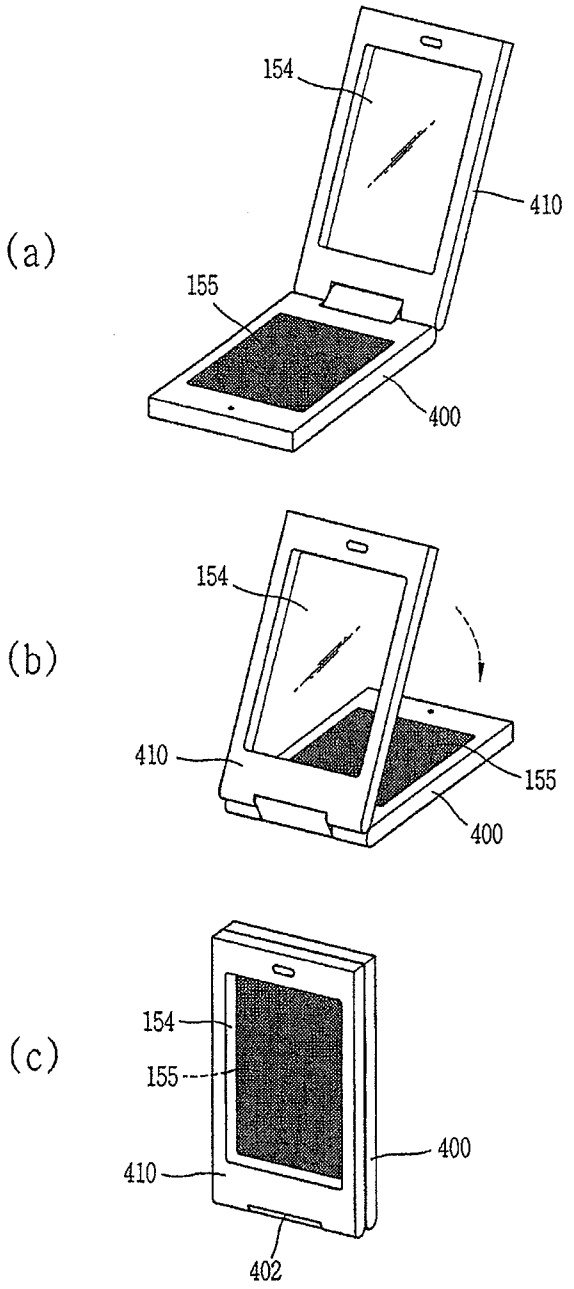

FIG. 22

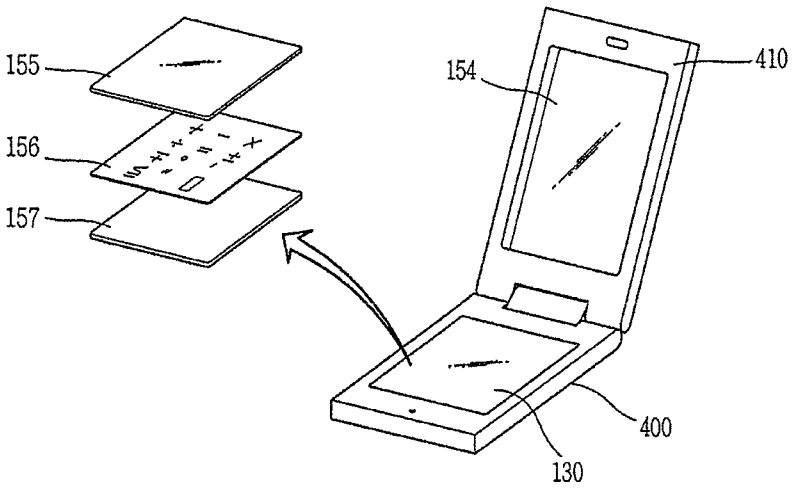

(a)

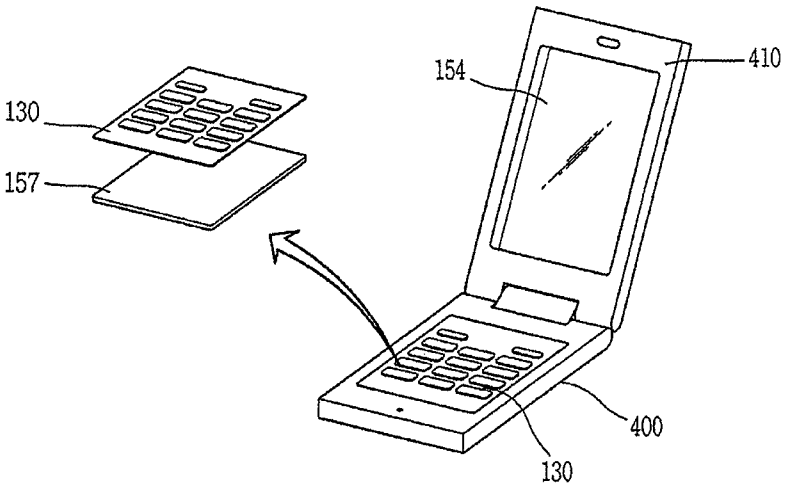

(b)

FIG. 23

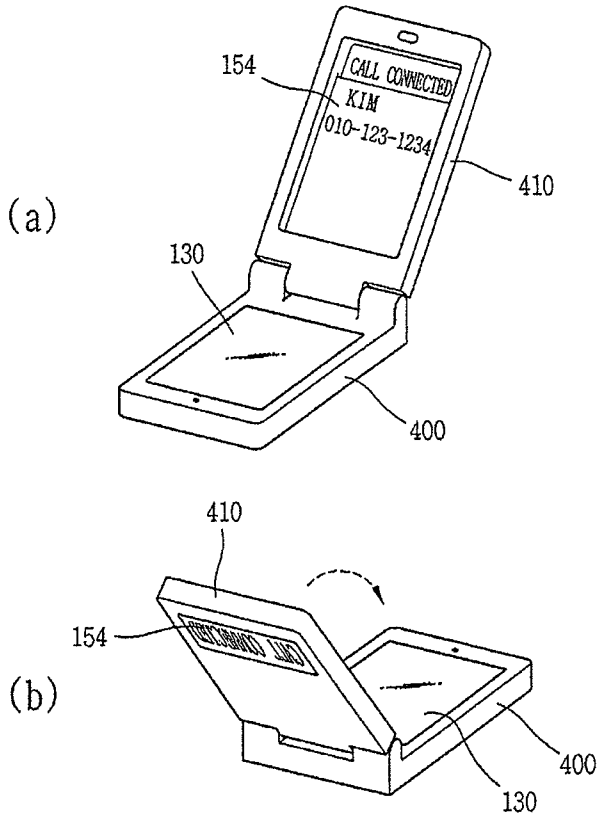
(a)
154
CALL CONNECTED
KIM
010-123-1234
410
130
400
(b)
410
154
130
400

FIG. 24

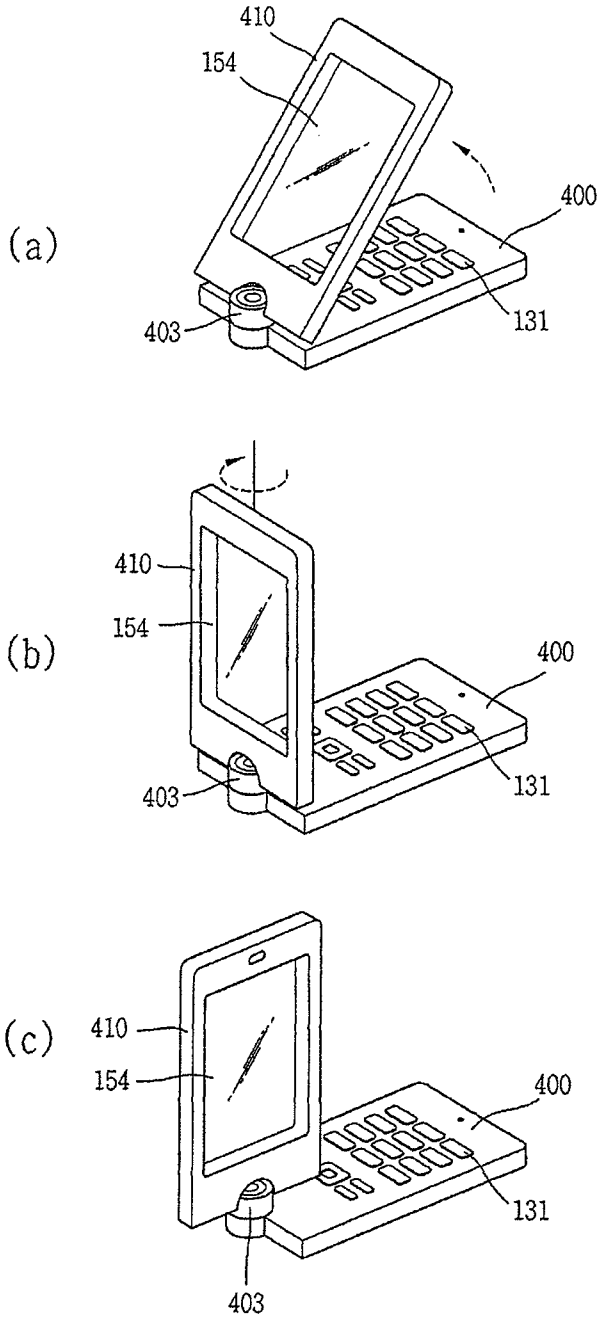

FIG. 25

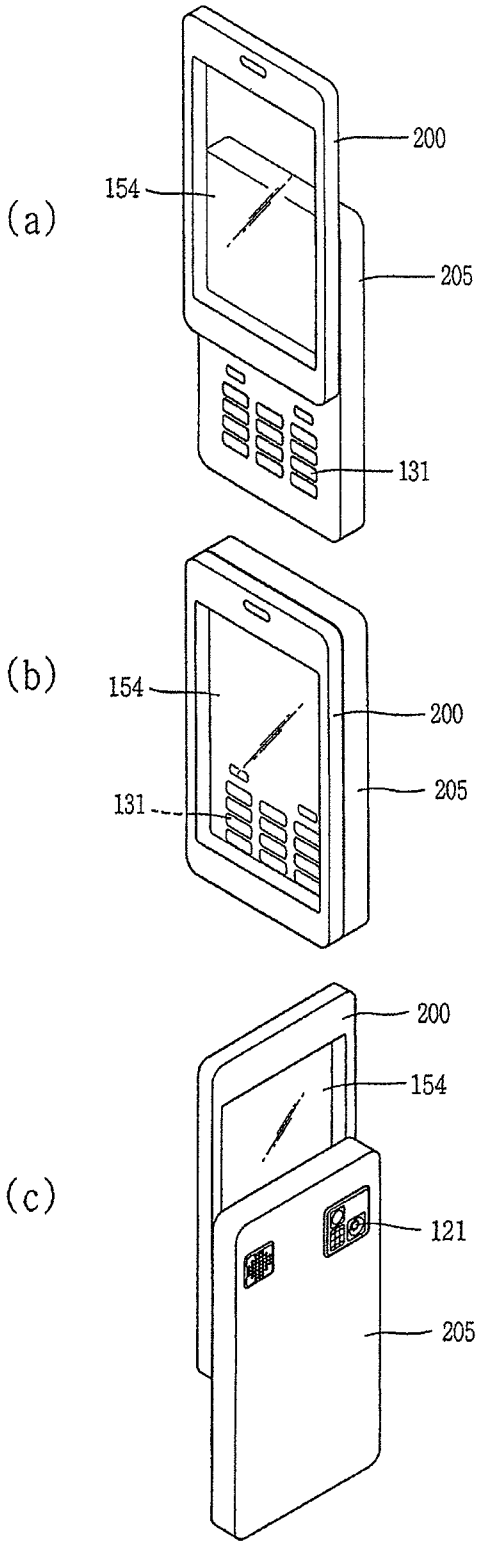

FIG. 26

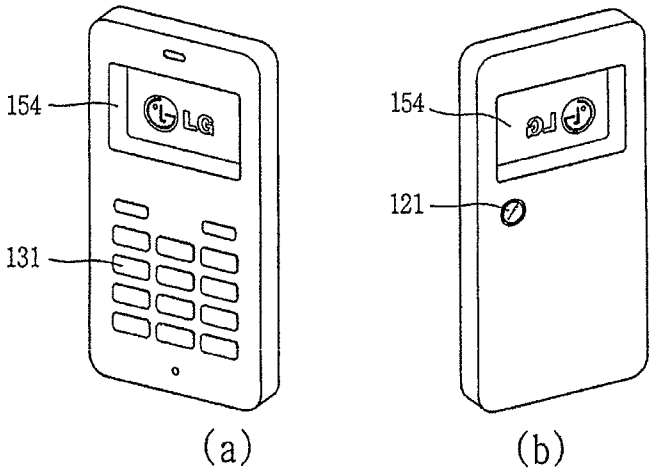

FIG. 27

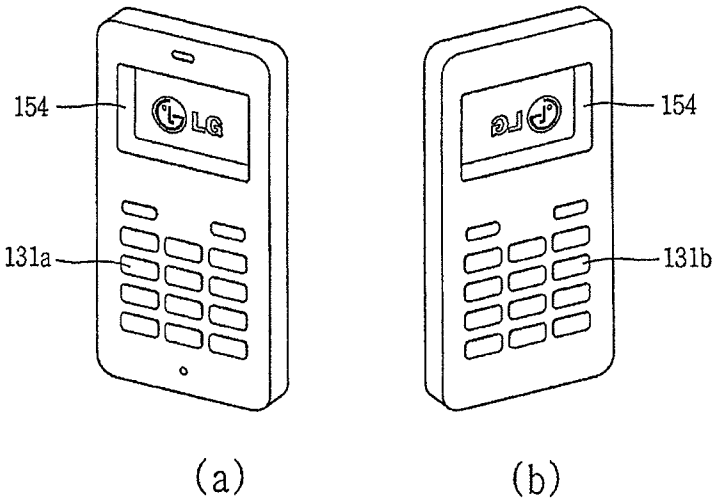

FIG. 28

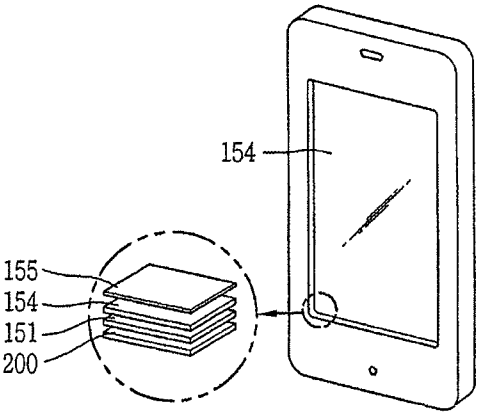

FIG. 29

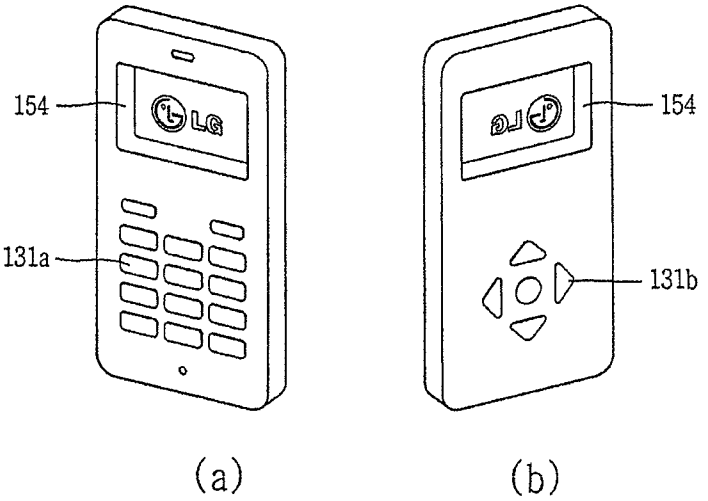

FIG. 30

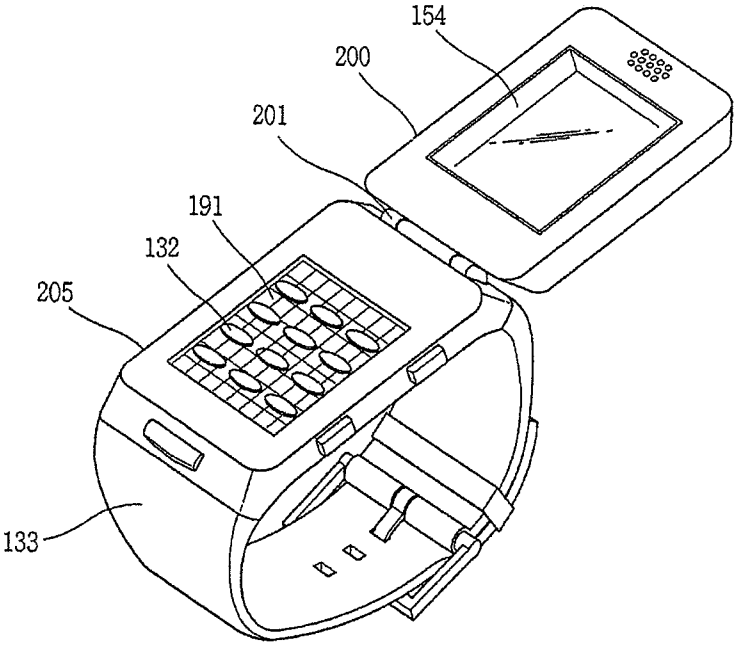

FIG. 31

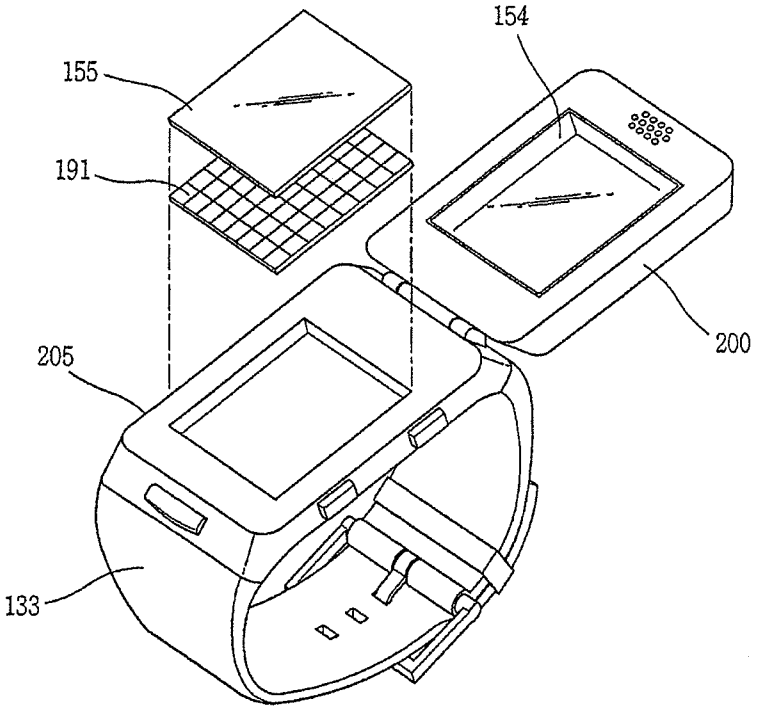

FIG. 32

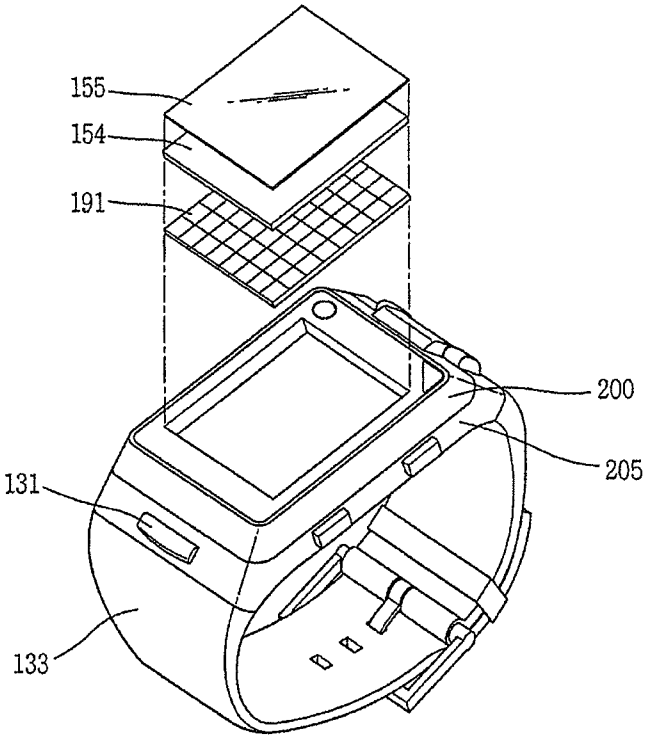

FIG. 33

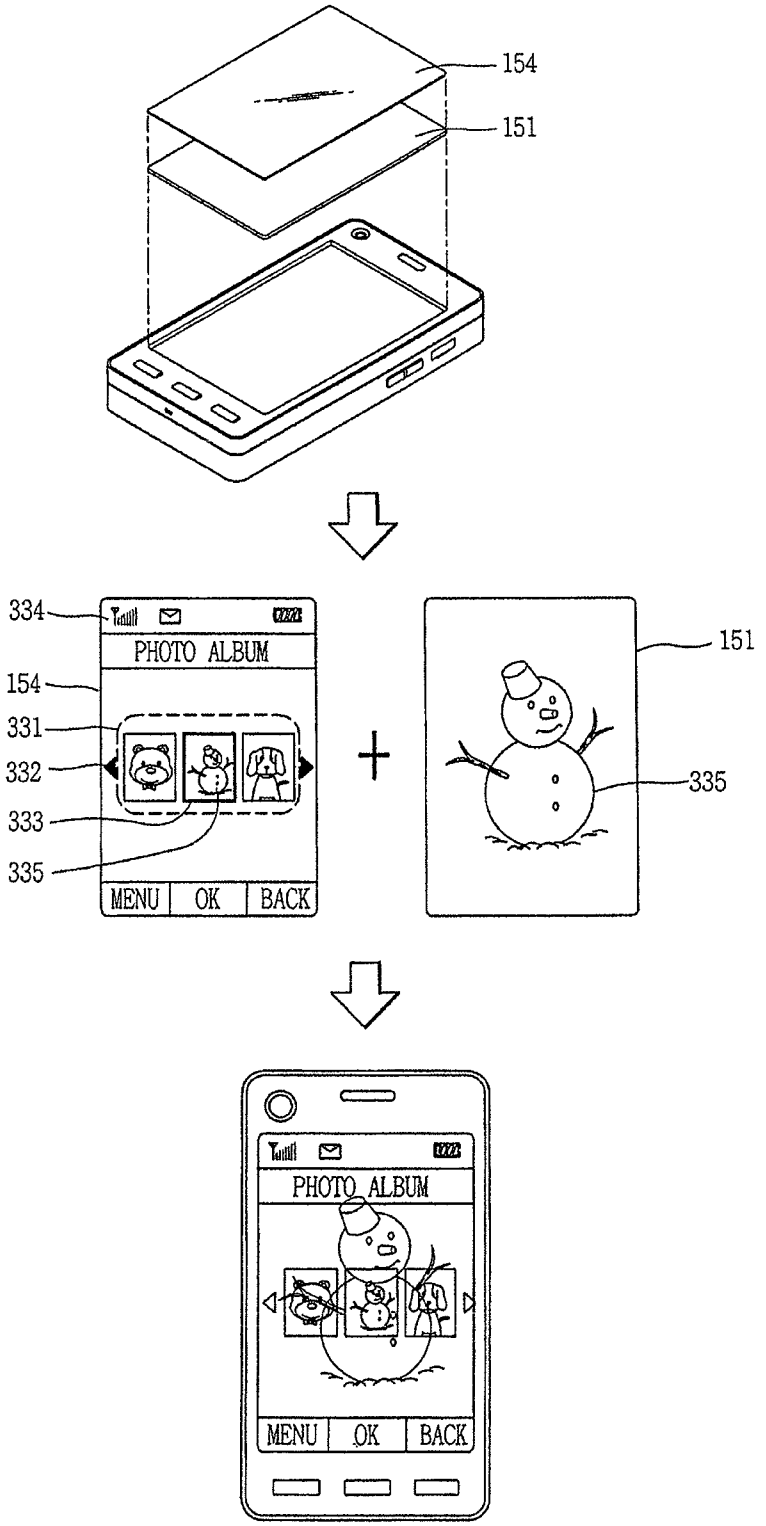
154
151
334
PHOTO ALBUM
154
331
332
333
335
MENU
OK
BACK
151
335
PHOTO ALBUM
MENU
OK
BACK

FIG. 34

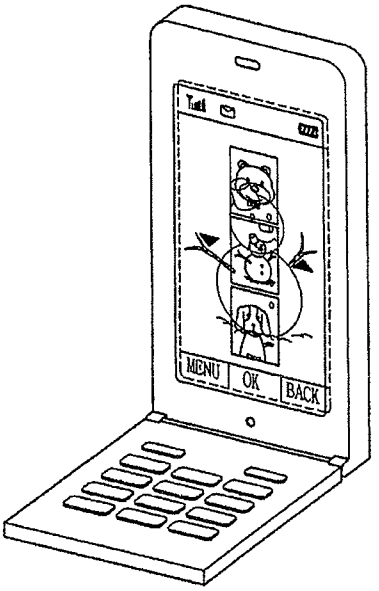

FIG. 35

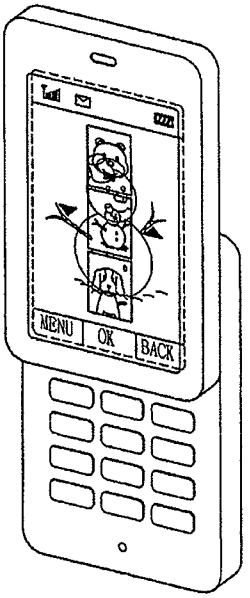

FIG. 36

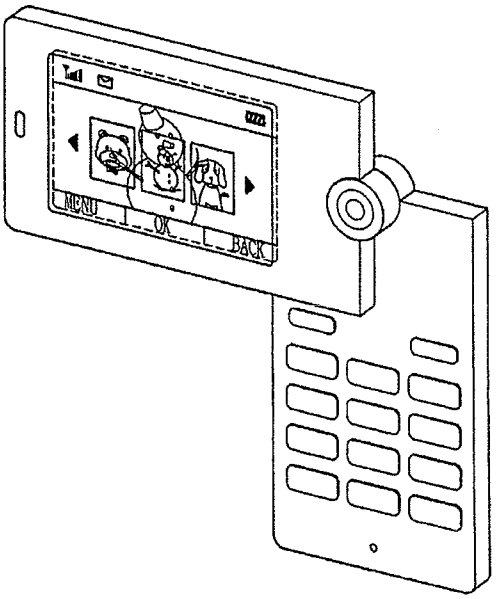

FIG. 37

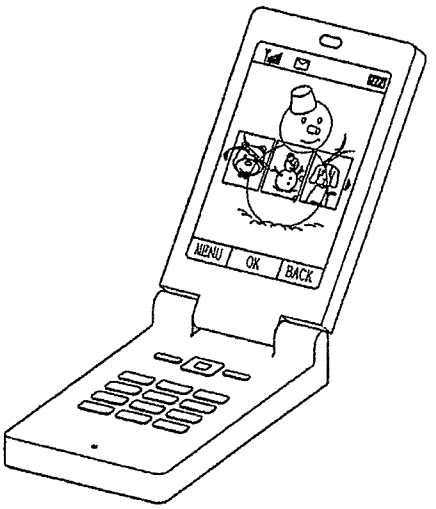

FIG. 38

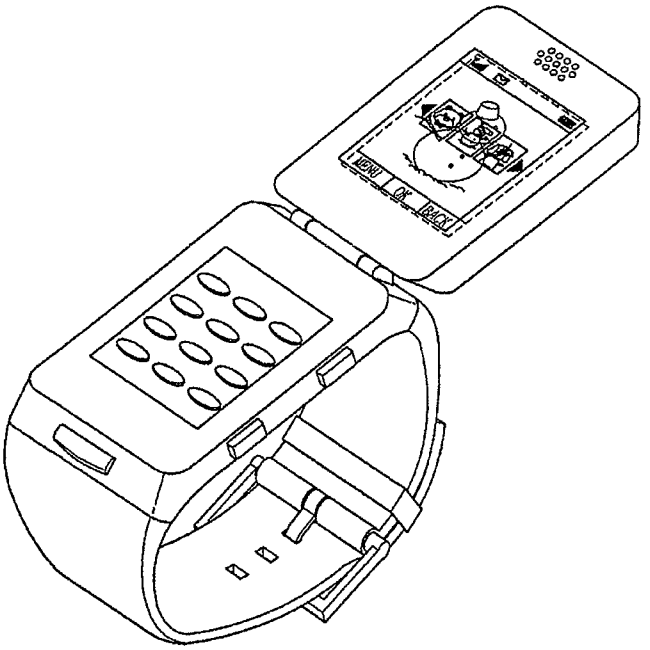

FIG. 39

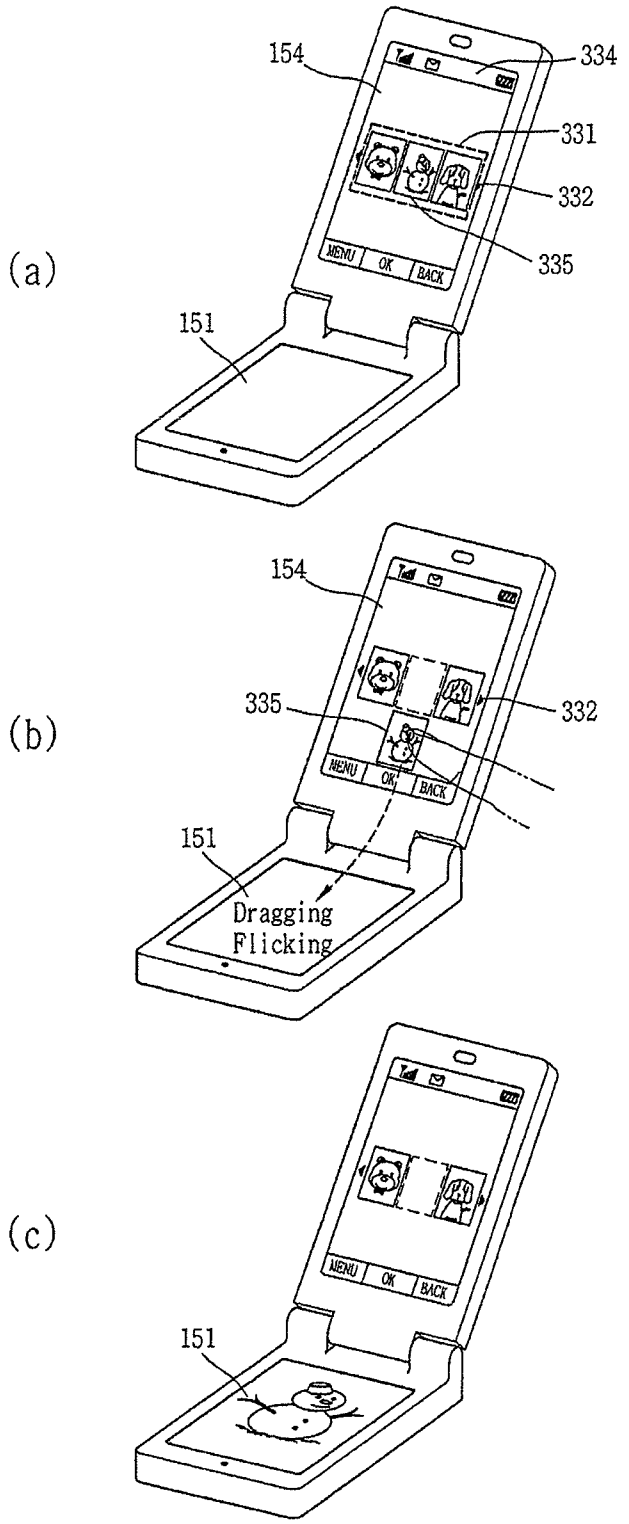
(a)
154
334
331
332
335
MENU
OK
BACK
151
(b)
154
335
332
MENU
OK
BACK
151
Dragging
Flicking
(c)
MENU
OK
BACK
151

FIG. 40

(a)

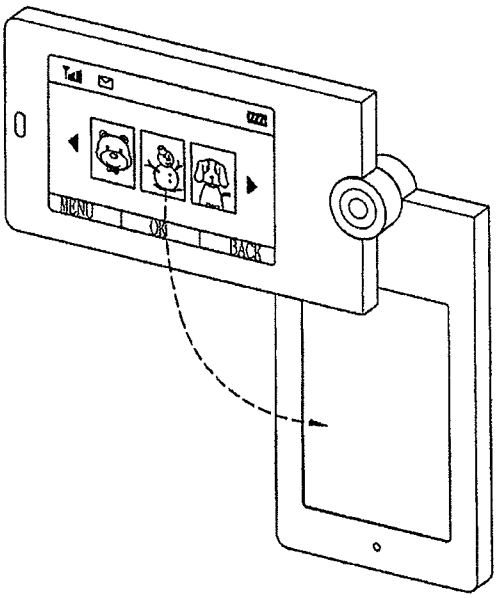

(b)

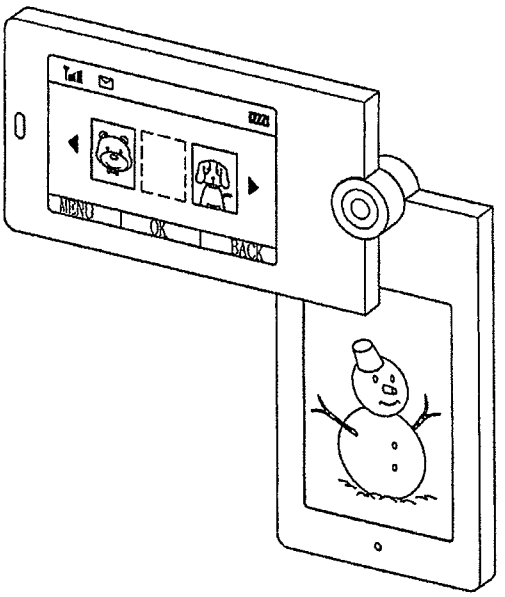

FIG. 41

(a)

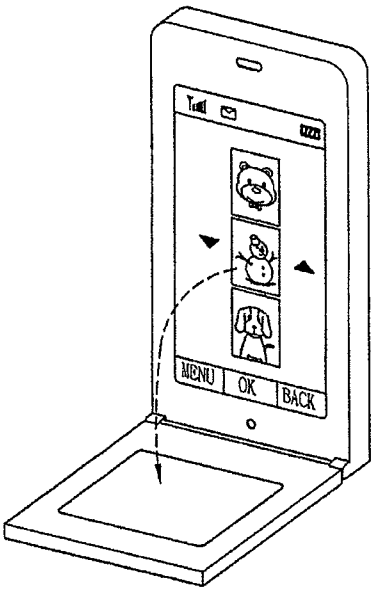

(b)

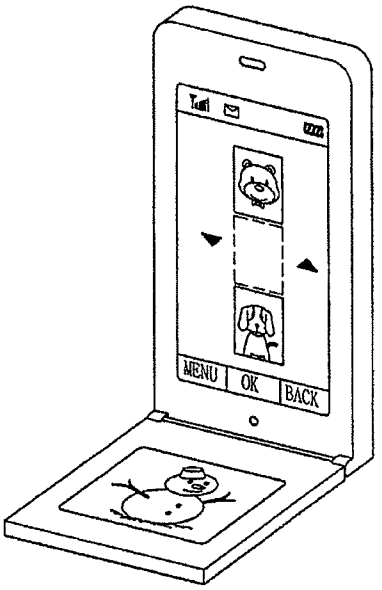

FIG. 42

(a)

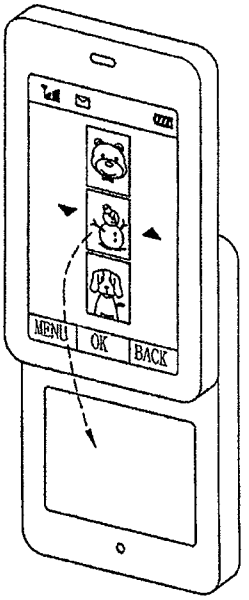

(b)

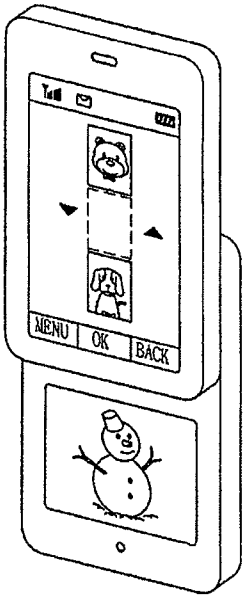

FIG. 43

(a)

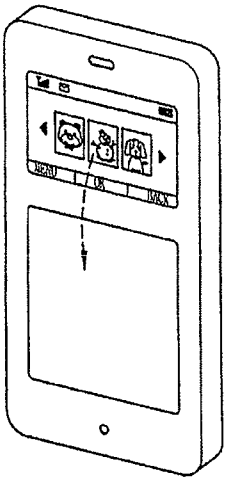

(b)

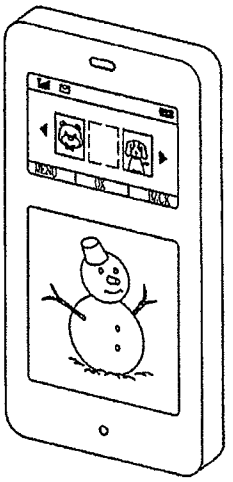

FIG. 44

(a)

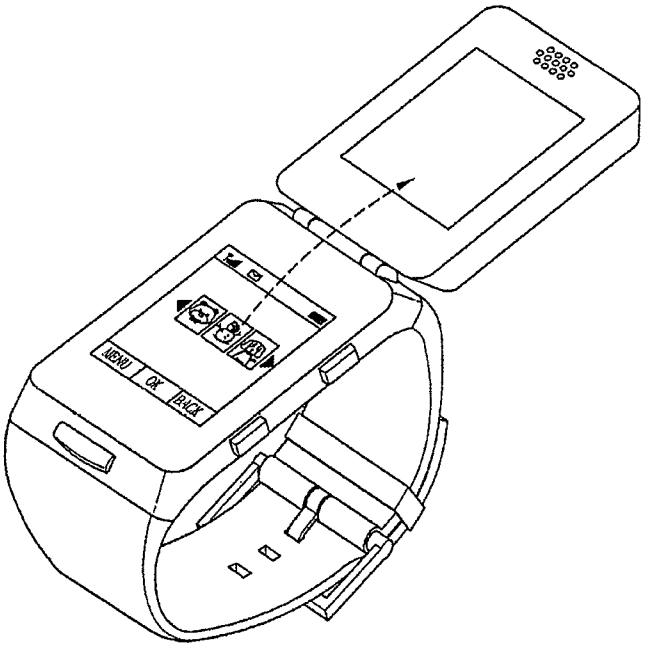

(b)

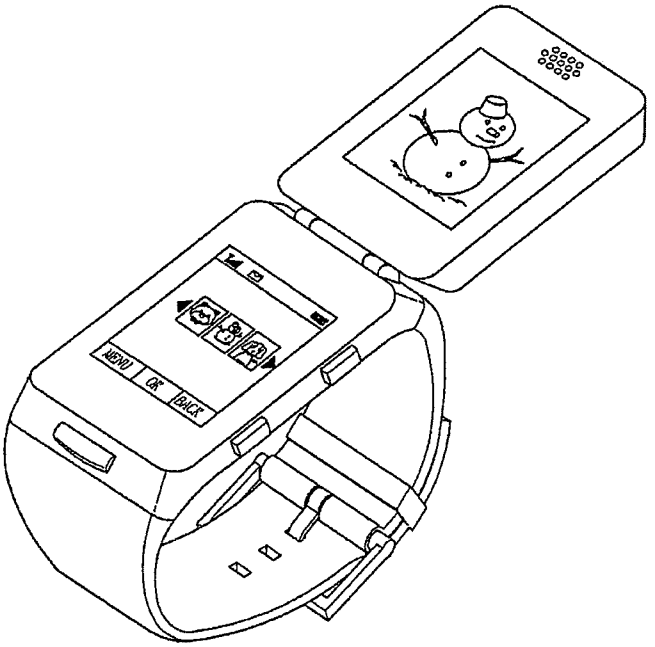

FIG. 45

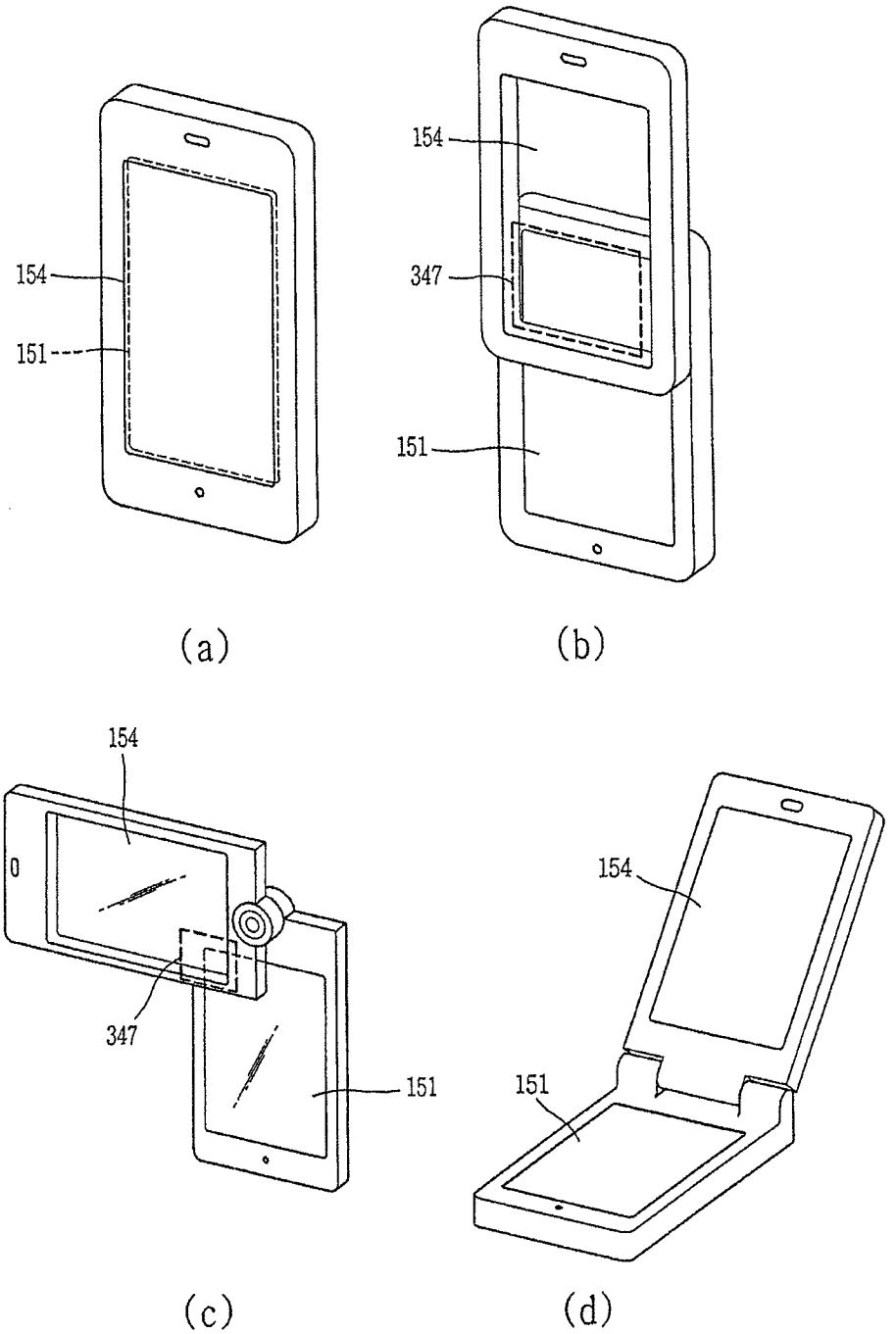

FIG. 46A

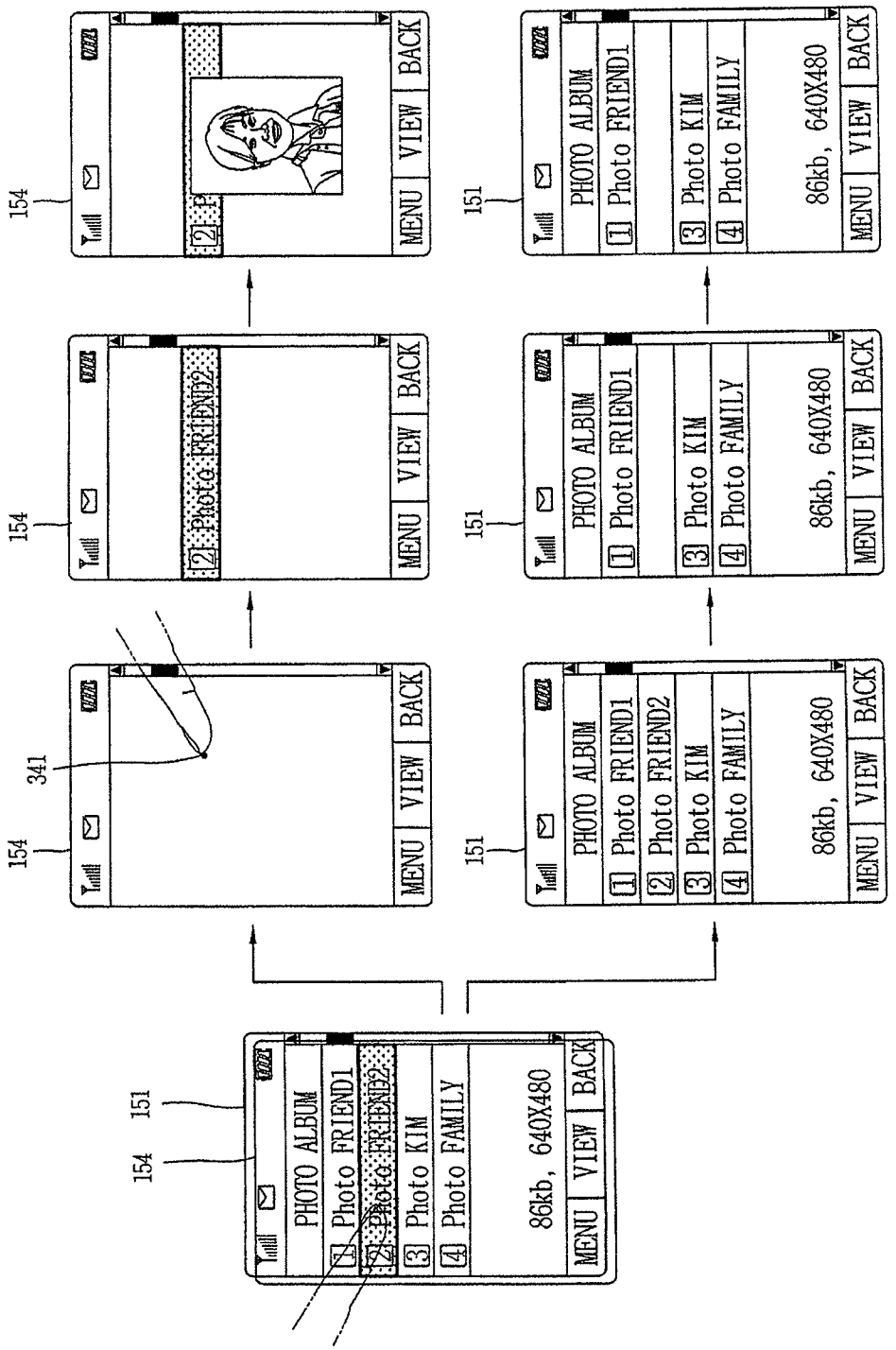
154
151
341
PHOTO ALBUM
1 Photo FRIEND1
2 Photo FRIEND2
3 Photo KIM
4 Photo FAMILY
86kb, 640X480
MENU
VIEW
BACK

FIG. 46B

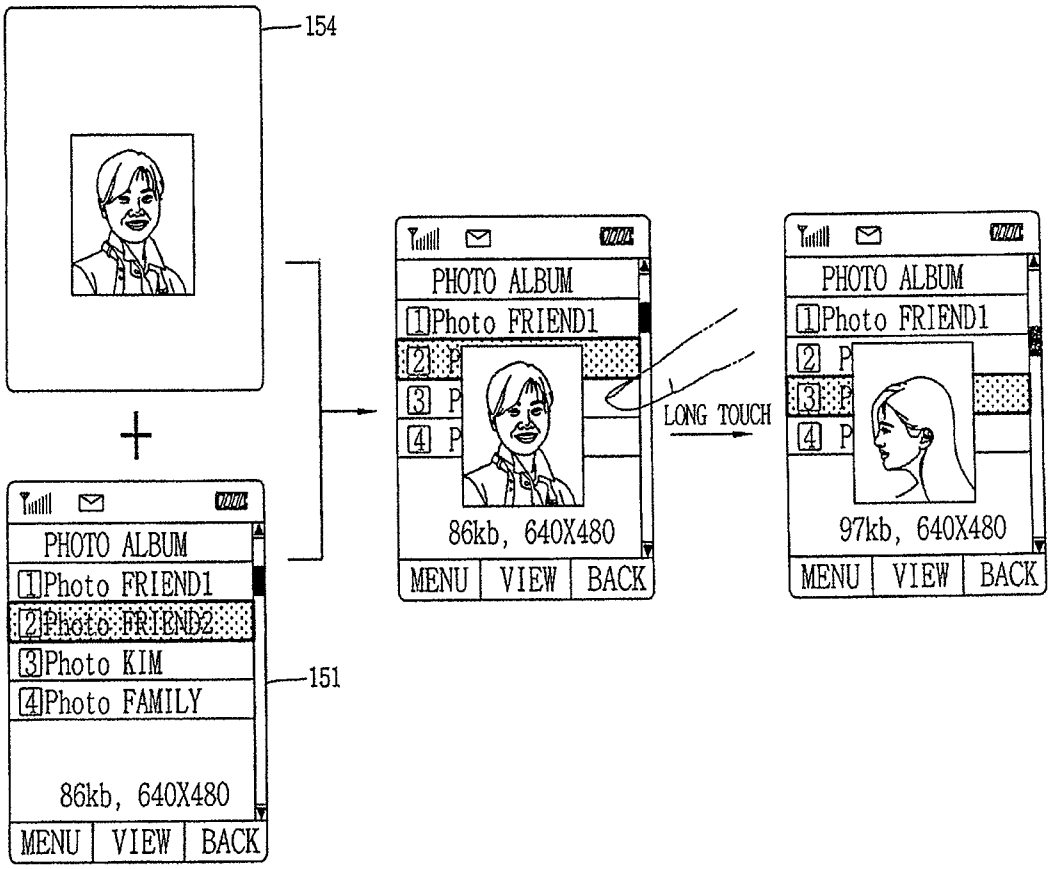
154
PHOTO ALBUM
1 Photo FRIEND1
2 Photo FRIEND2
3 Photo KIM
4 Photo FAMILY
86kb, 640X480
MENU
VIEW
BACK
151
PHOTO ALBUM
1 Photo FRIEND1
86kb, 640X480
MENU
VIEW
BACK
LONG TOUCH
PHOTO ALBUM
1 Photo FRIEND1
97kb, 640X480
MENU
VIEW
BACK

FIG. 46C

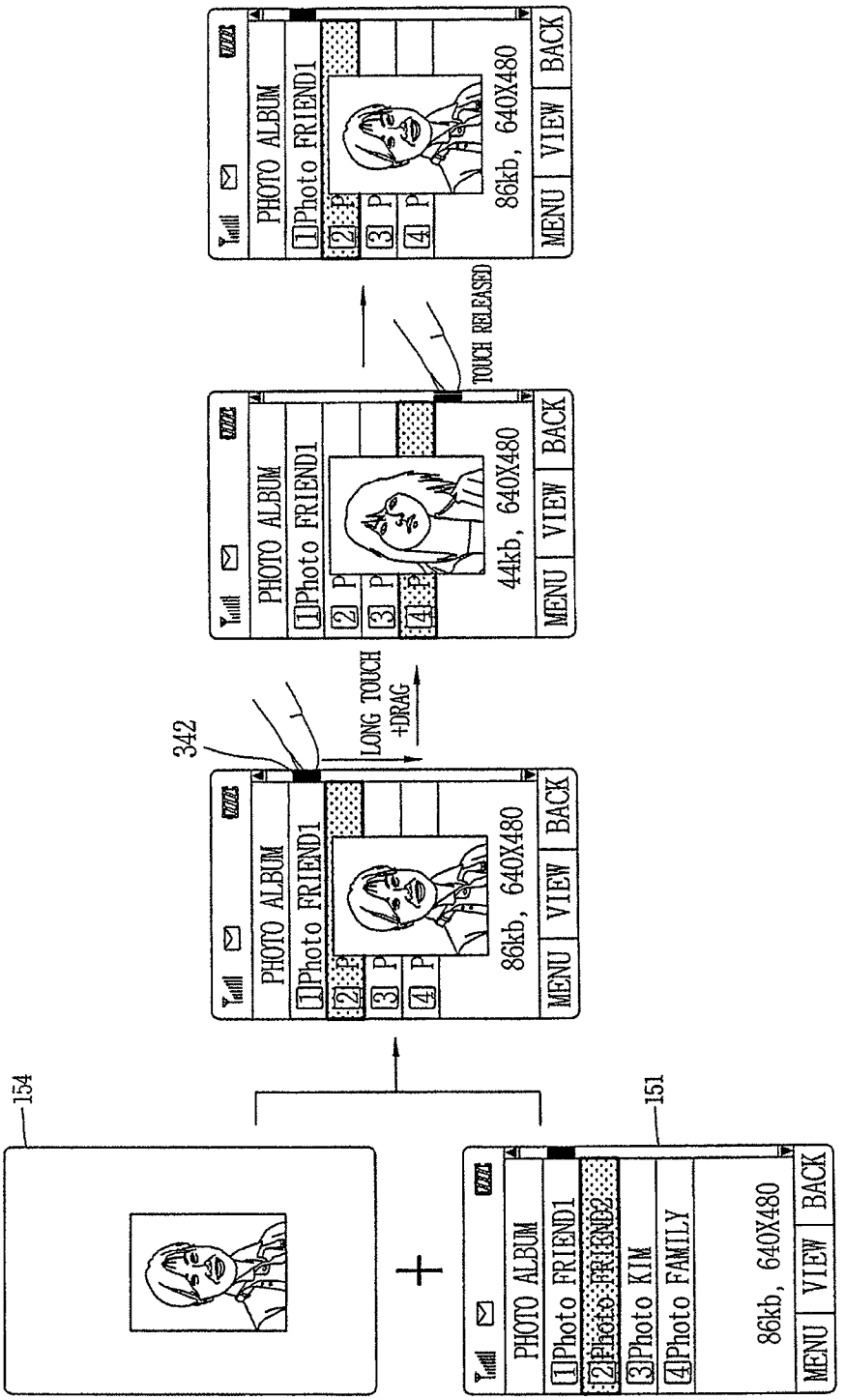
154
151
342
PHOTO ALBUM
1 Photo FRIEND1
2 Photo FRIEND2
3 Photo KIM
4 Photo FAMILY
86kb, 640X480
MENU
VIEW
BACK
LONG TOUCH +DRAG
44kb, 640X480
TOUCH RELEASED

FIG. 47A

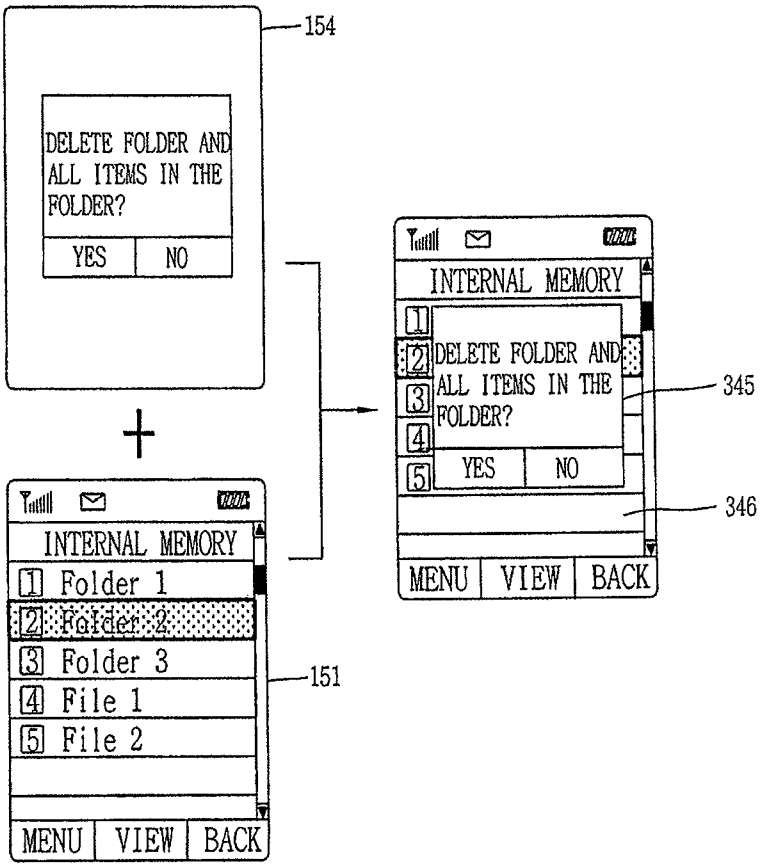
154
DELETE FOLDER AND ALL ITEMS IN THE FOLDER?
YES
NO
INTERNAL MEMORY
1 Folder 1
2 Folder 2
3 Folder 3
4 File 1
5 File 2
MENU
VIEW
BACK
151
INTERNAL MEMORY
DELETE FOLDER AND ALL ITEMS IN THE FOLDER?
YES
NO
345
346
MENU
VIEW
BACK

FIG. 47B

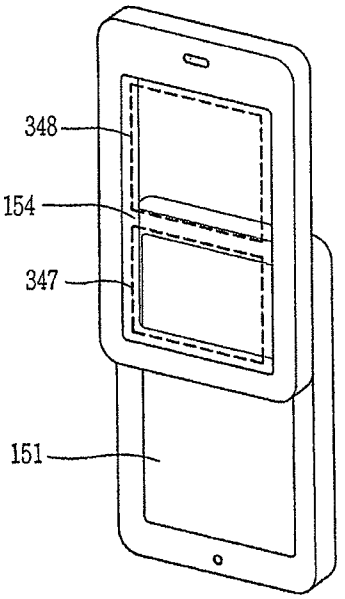

FIG. 48

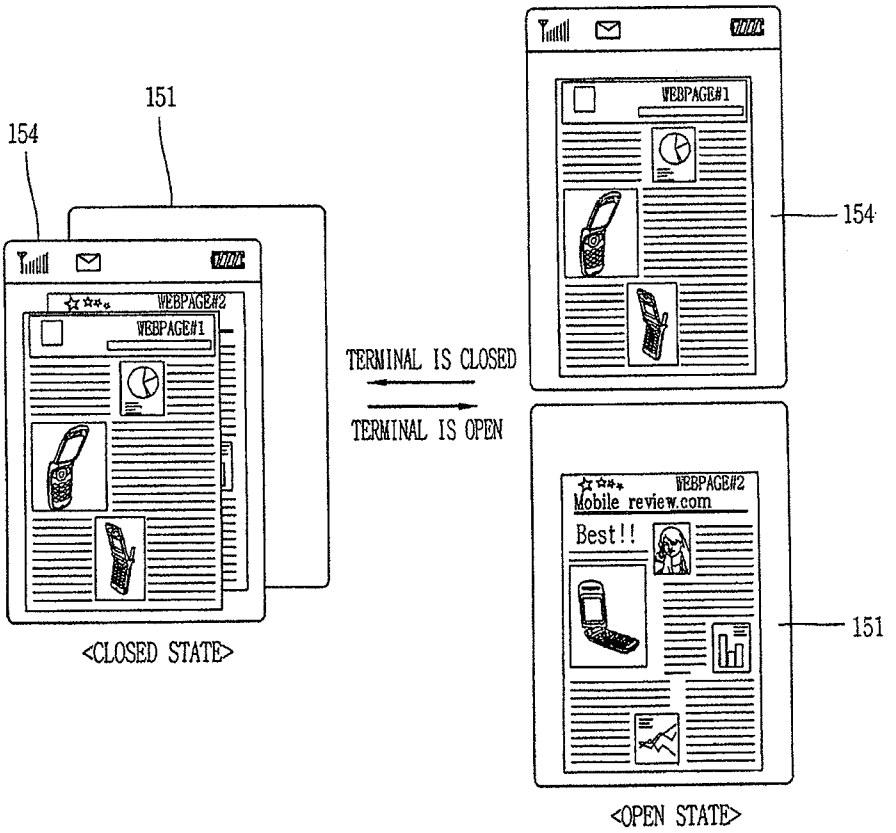
151
154
WEBPAGE#2
WEBPAGE#1
<CLOSED STATE>
TERMINAL IS CLOSED
TERMINAL IS OPEN
WEBPAGE#1
154
WEBPAGE#2
Mobile review.com
Best!!
151
<OPEN STATE>

FIG. 49A

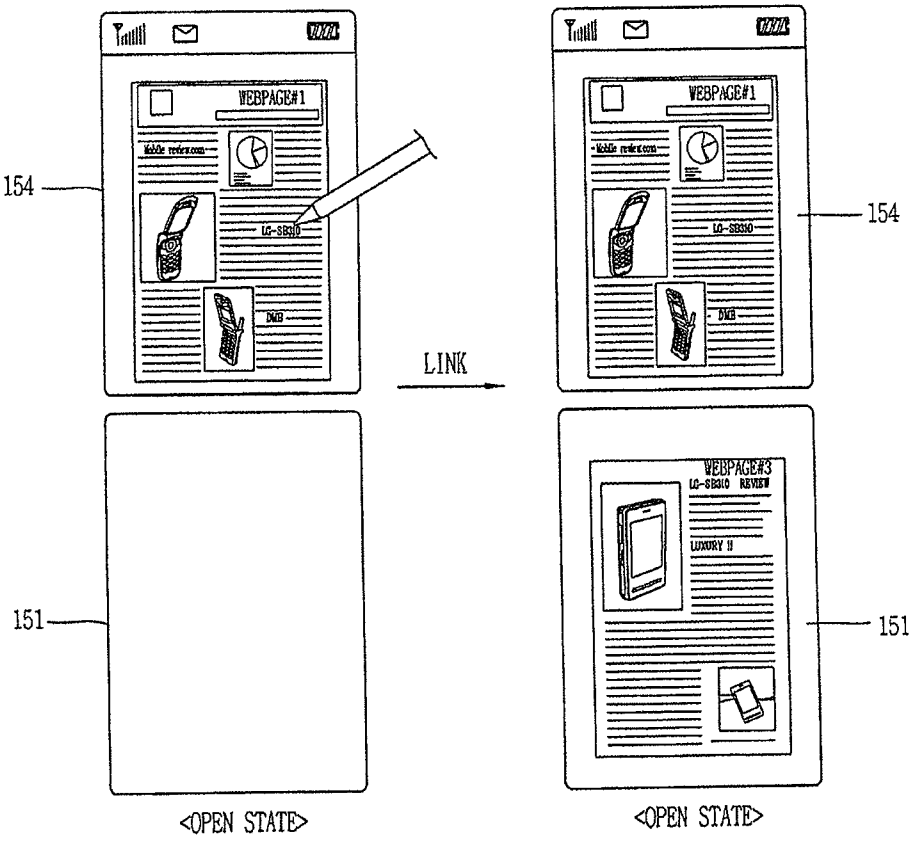
WEBPAGE#1
154
LINK
WEBPAGE#1
154
WEBPAGE#3
LG-SB310 REVIEW
LUXURY II
151
151
<OPEN STATE>
<OPEN STATE>

FIG. 49B

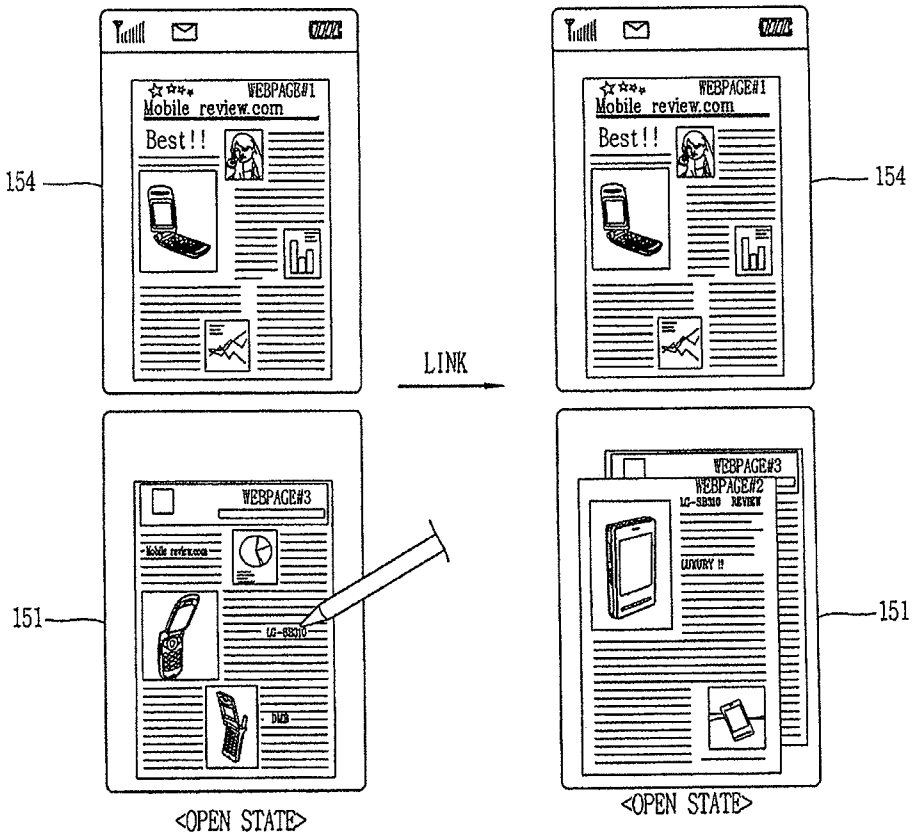
WEBPAGE#1
Mobile review.com
Best!!
154
LINK
WEBPAGE#3
151
<OPEN STATE>
WEBPAGE#3
WEBPAGE#2
LUXURY !!
151
<OPEN STATE>

FIG. 50A

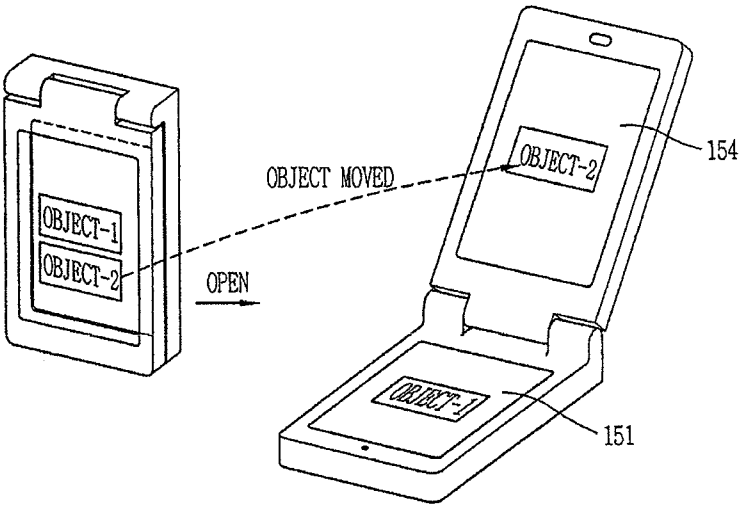

FIG. 50B

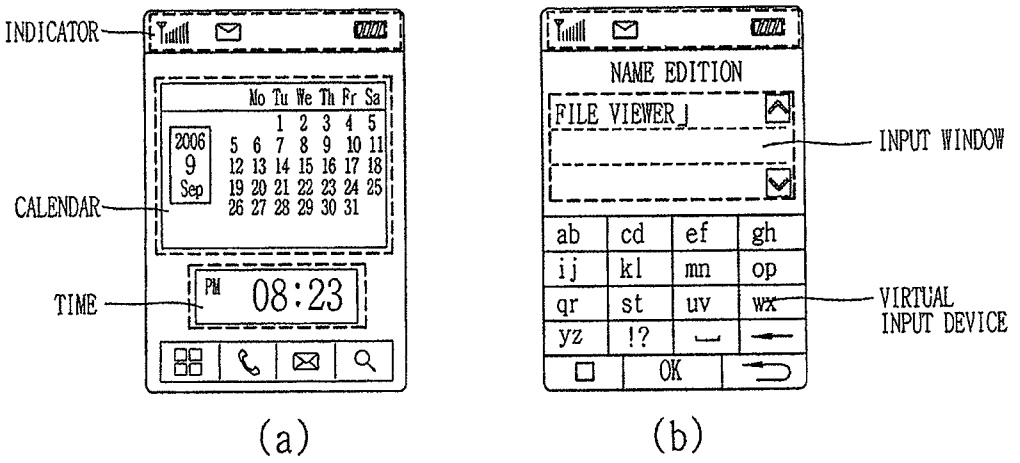

FIG. 51A

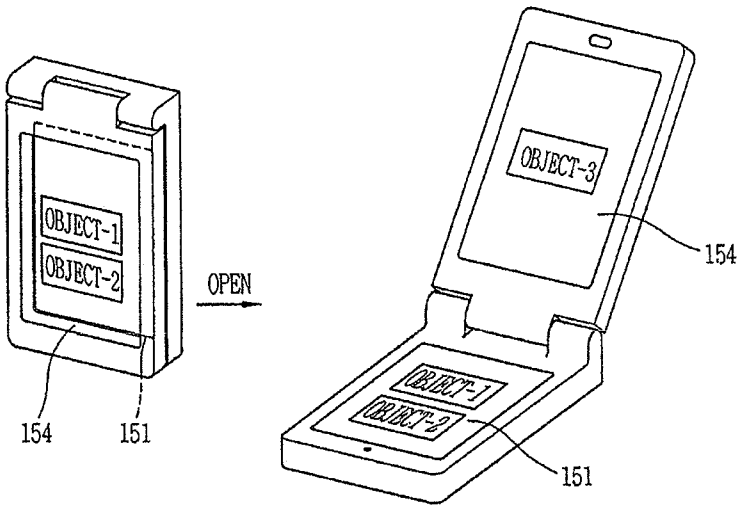

FIG. 51B

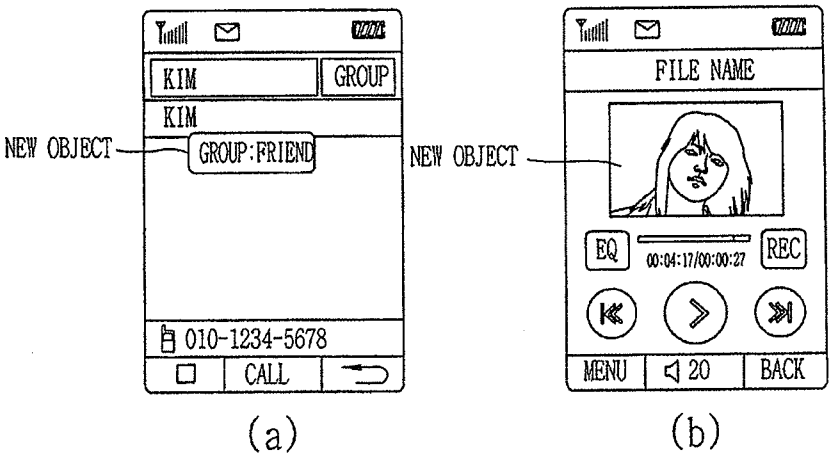

FIG. 52

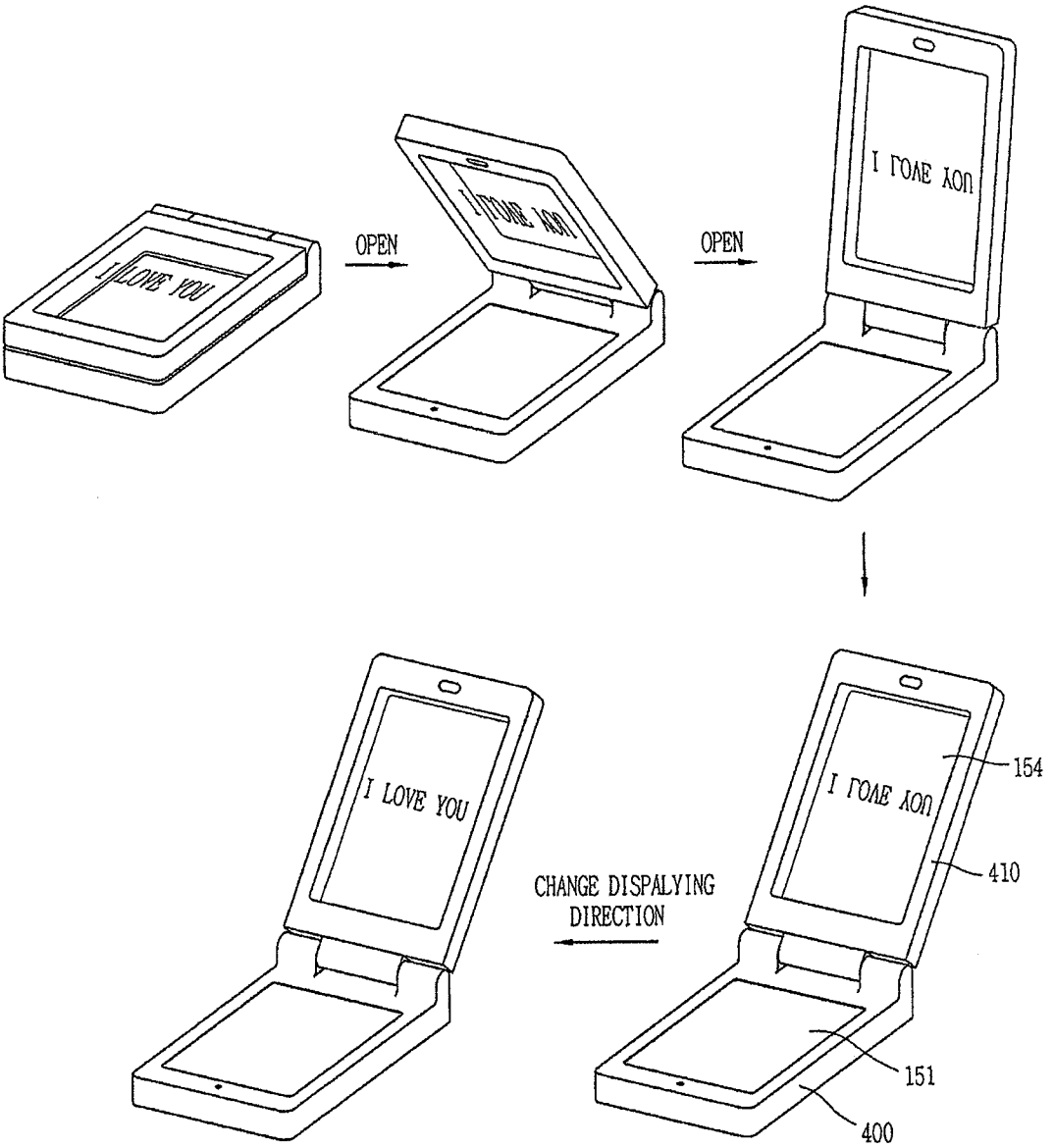
I LOVE YOU
OPEN
OPEN
I LOVE YOU
I LOVE YOU
CHANGE DISPALYING DIRECTION
154
410
151
400

FIG. 53

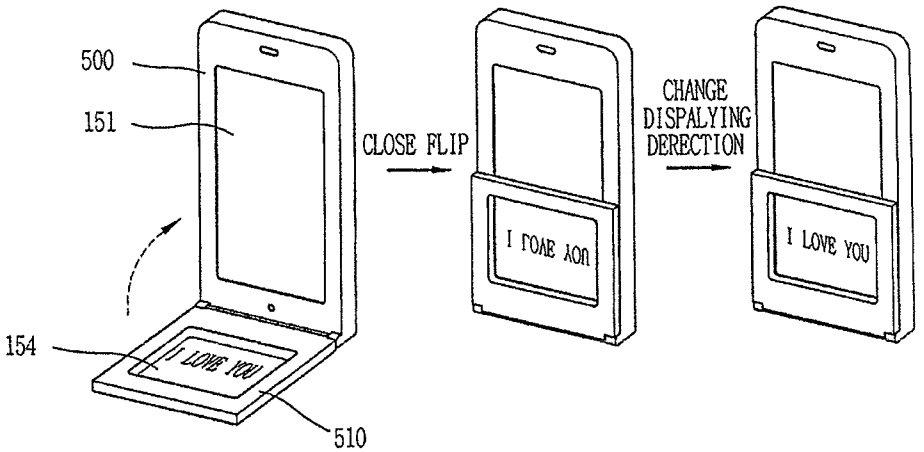
500
151
154
I LOVE YOU
510
CLOSE FLIP
I LOVE YOU
CHANGE
DISPALYING
DERECTION
I LOVE YOU

FIG. 54

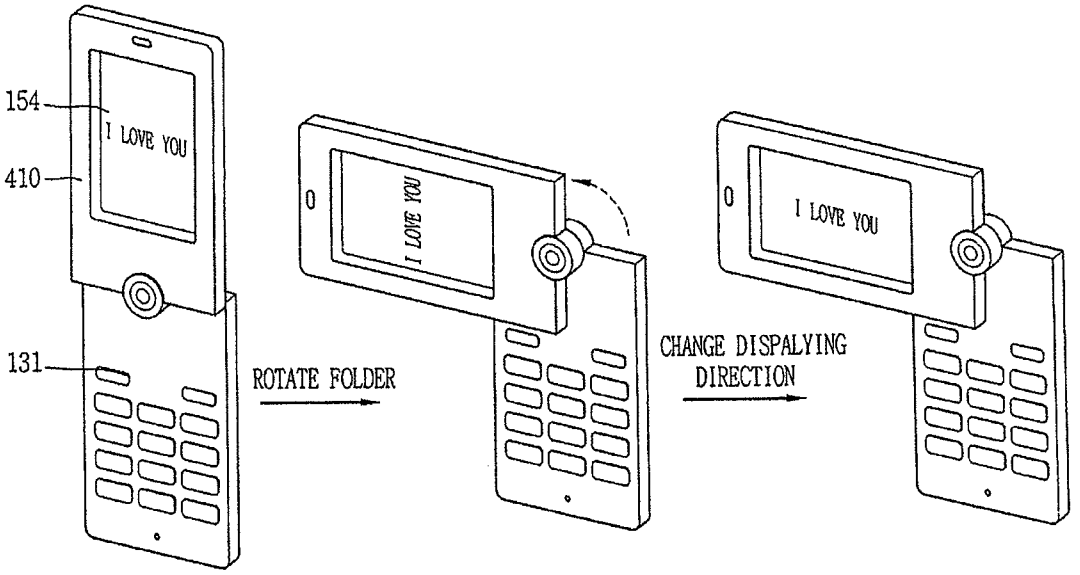
154
410
131
I LOVE YOU
ROTATE FOLDER
I LOVE YOU
CHANGE DISPALYING DIRECTION
I LOVE YOU

FIG. 55

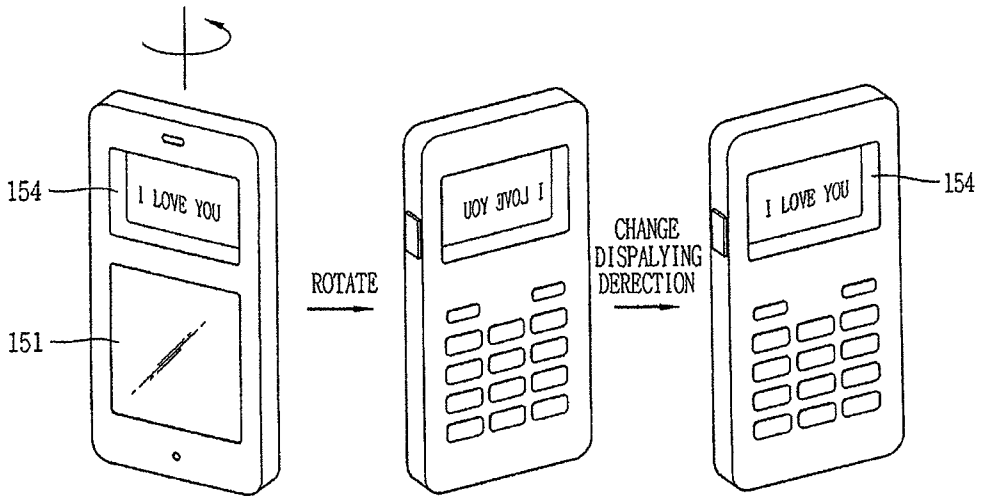
154
I LOVE YOU
151
ROTATE
UOY EVOL I
CHANGE
DISPALYING
DERECTION
I LOVE YOU
154

FIG. 56

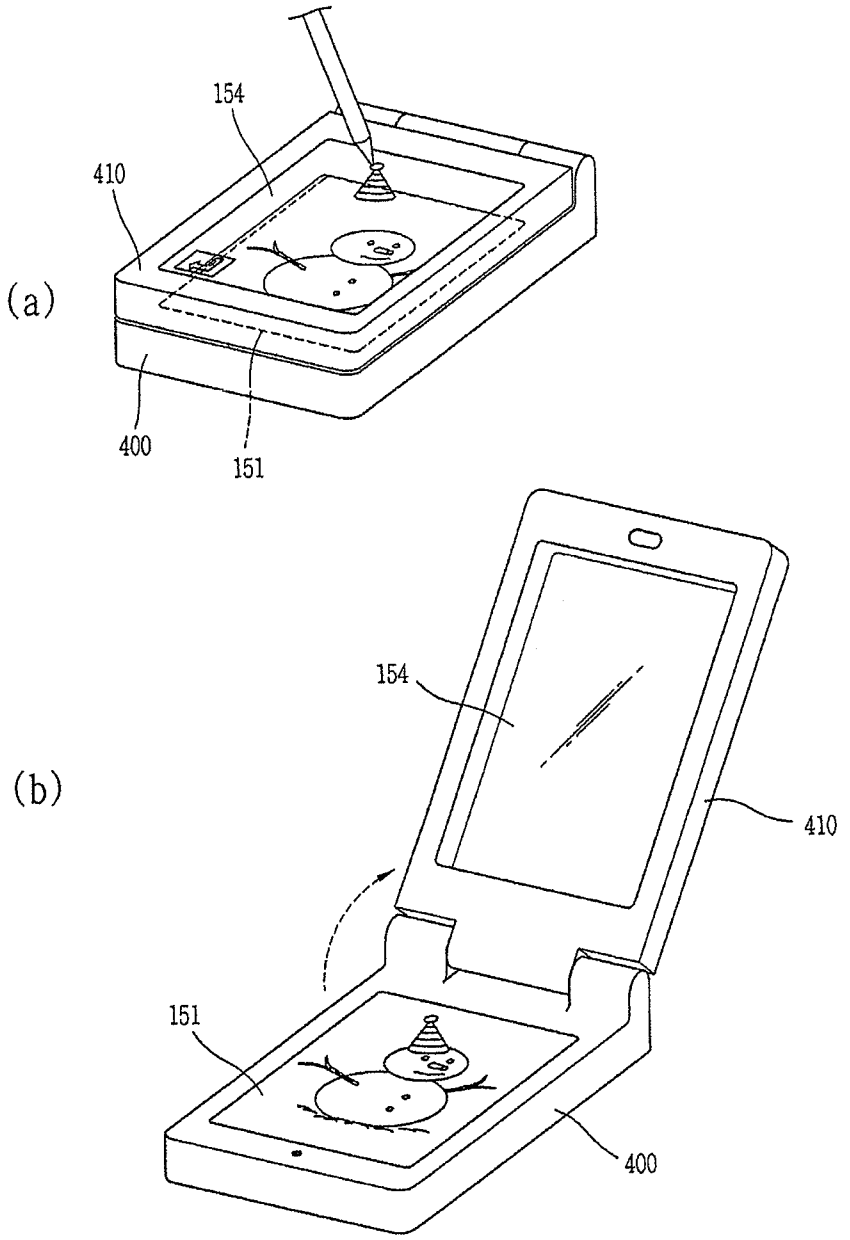

FIG. 57

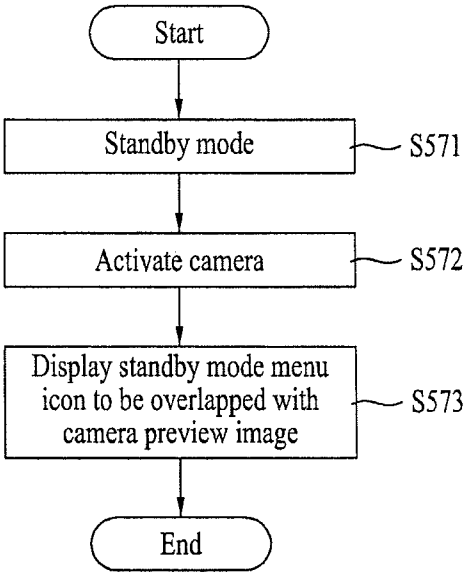
Start
Standby mode
S571
Activate camera
S572
Display standby mode menu icon to be overlapped with camera preview image
S573
End

FIG. 58

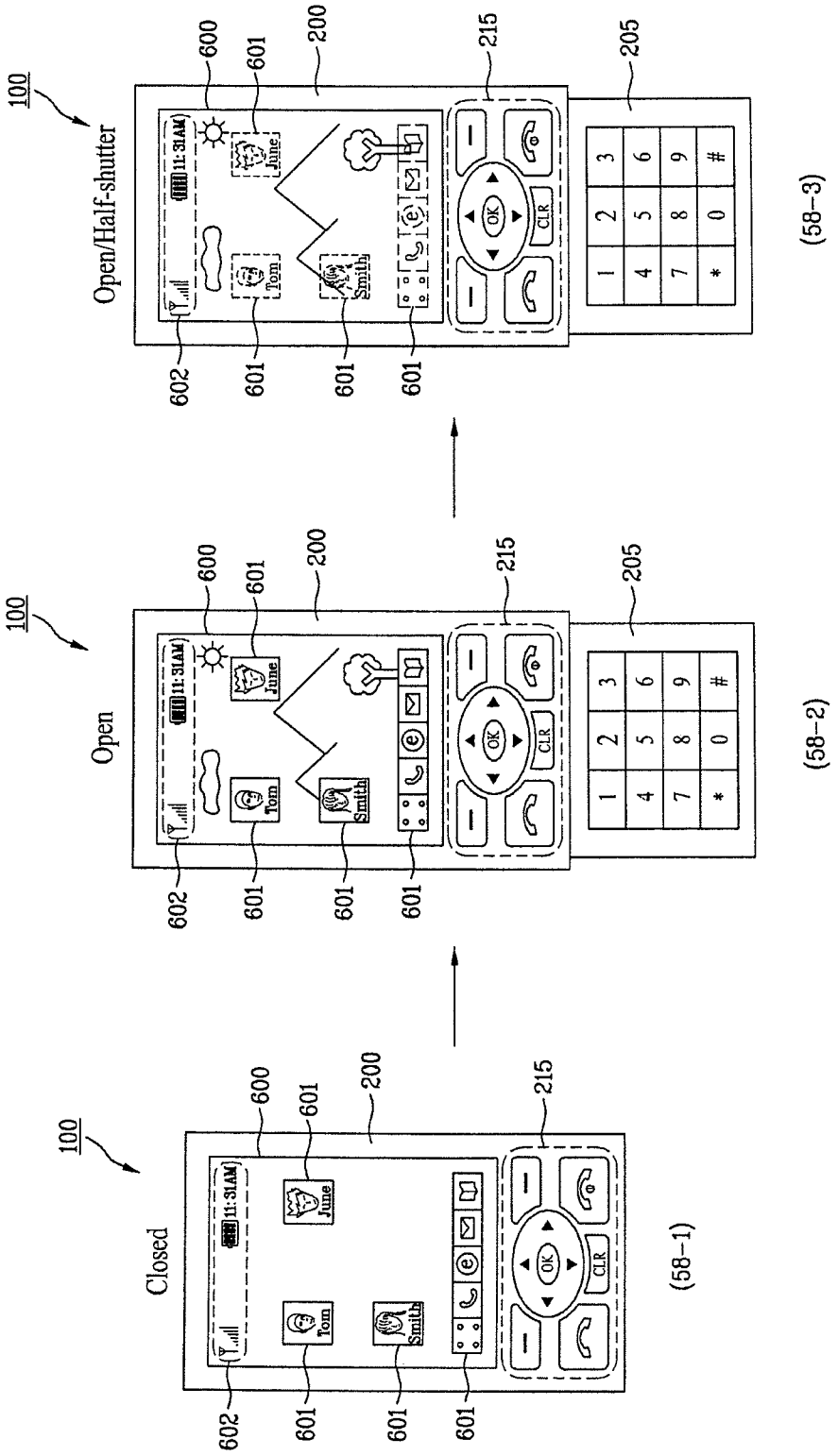
100
Closed
Open
Open/Half-shutter
600
601
200
215
205
602
11:31AM
June
Tom
Smith
OK
CLR
1
2
3
4
5
6
7
8
9
*
0
#
(58-1)
(58-2)
(58-3)

FIG. 59

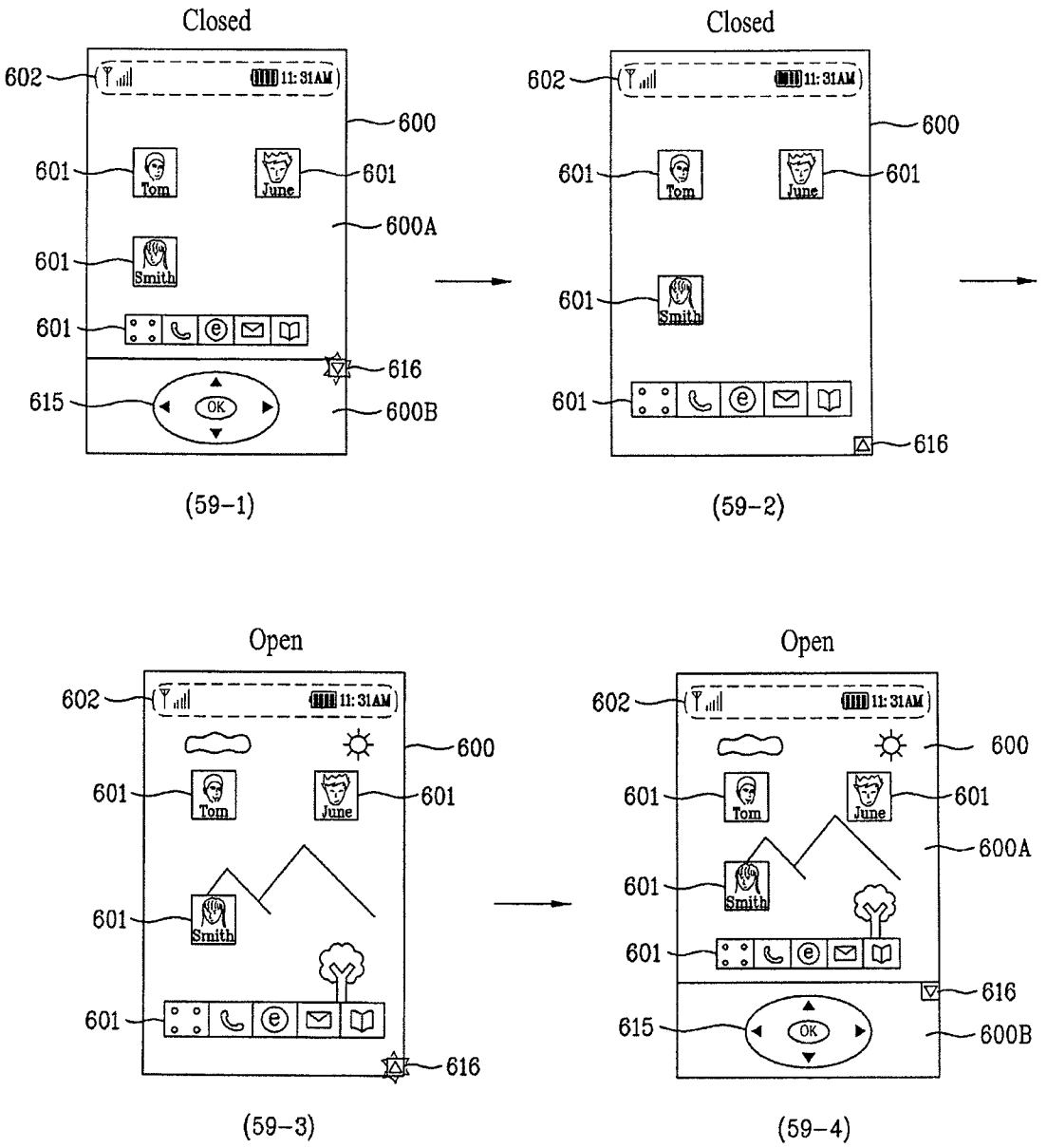
Closed
602
11:31AM
600
601
Tom
June
601
600A
601
Smith
601
616
615
OK
600B
(59-1)
Closed
602
11:31AM
600
601
Tom
June
601
601
Smith
601
616
(59-2)
Open
602
11:31AM
600
601
Tom
June
601
601
Smith
601
616
(59-3)
Open
602
11:31AM
600
601
Tom
June
601
600A
601
Smith
601
616
615
OK
600B
(59-4)

FIG. 60

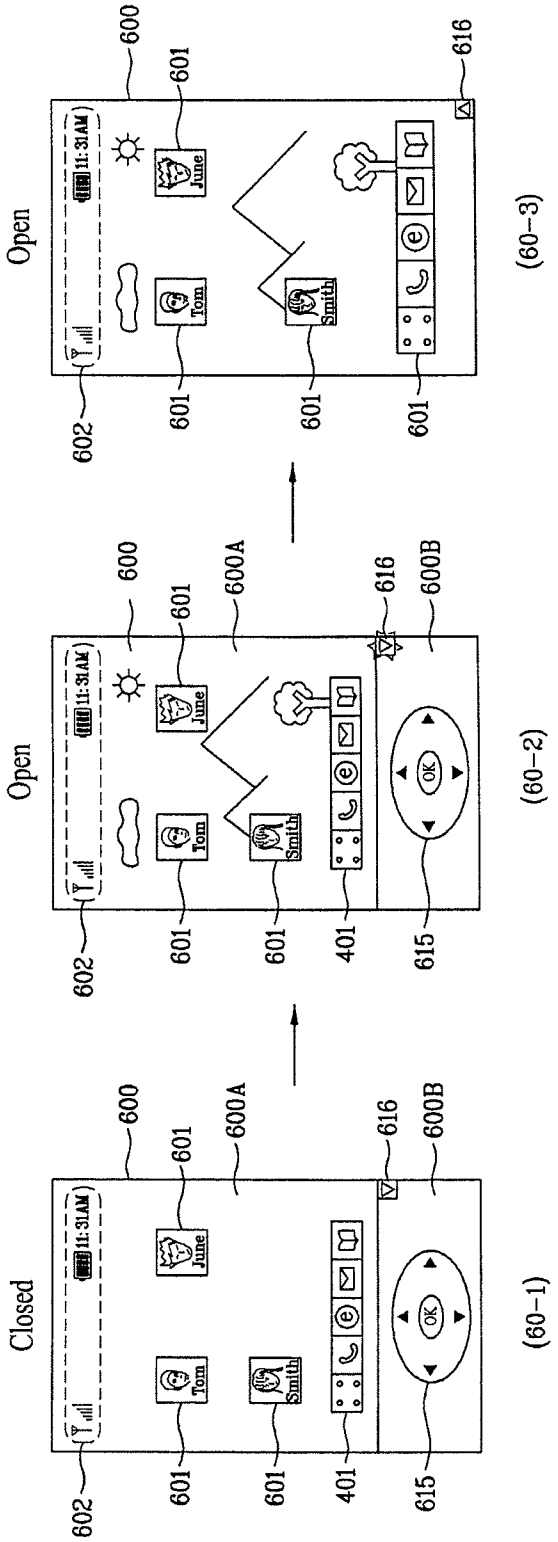
Closed
Open
Open
11:31AM
Tom
June
Smith
OK
600
600A
600B
601
602
401
615
616
(60-1)
(60-2)
(60-3)

FIG. 61

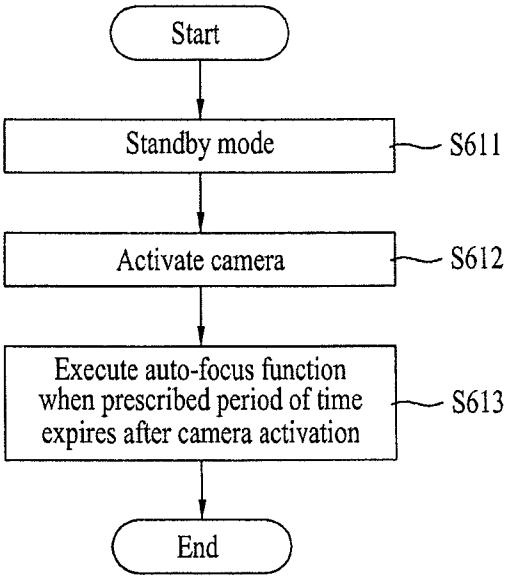
Start
Standby mode
S611
Activate camera
S612
Execute auto-focus function when prescribed period of time expires after camera activation
S613
End

FIG. 62

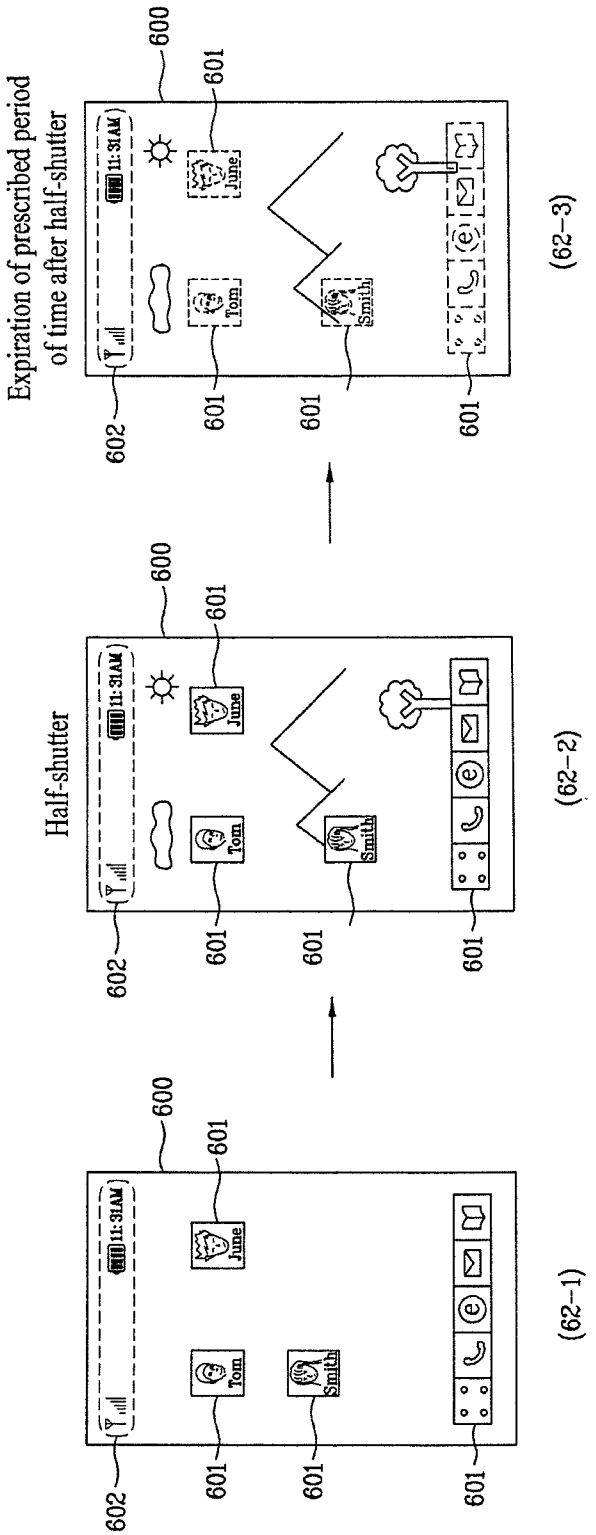
Expiration of prescribed period of time after half-shutter
Half-shutter
11:31AM
Tom
June
Smith
600
601
602
(62-1)
(62-2)
(62-3)

FIG. 63A

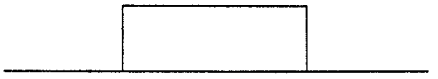

(63A-1)

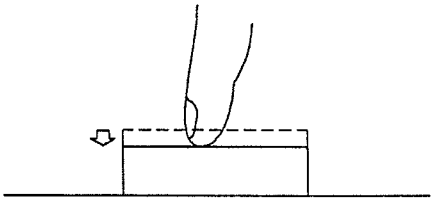

(63A-2)

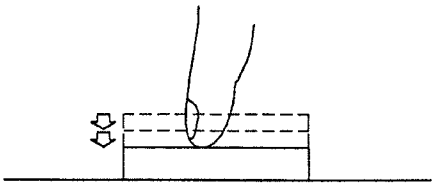

(63A-3)

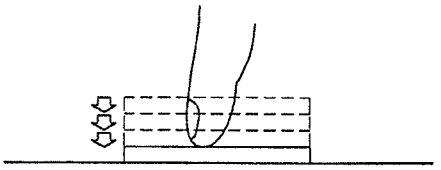

(63A-4)

FIG. 63B

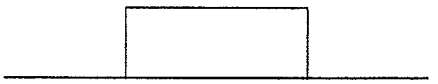

(63B-1)

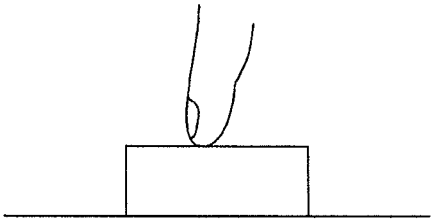

(63B-2)

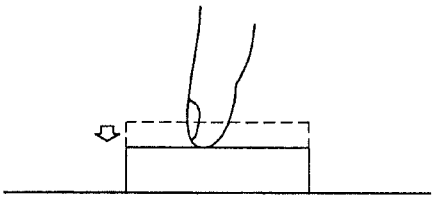

(63B-3)

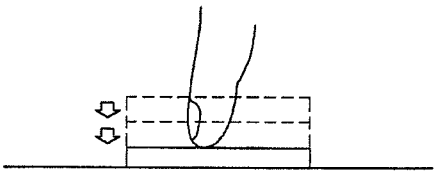

(63B-4)

FIG. 64

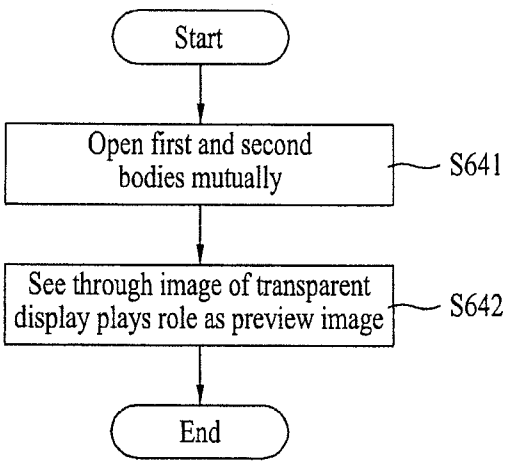
Start
Open first and second bodies mutually
S641
See through image of transparent display plays role as preview image
S642
End

FIG. 65

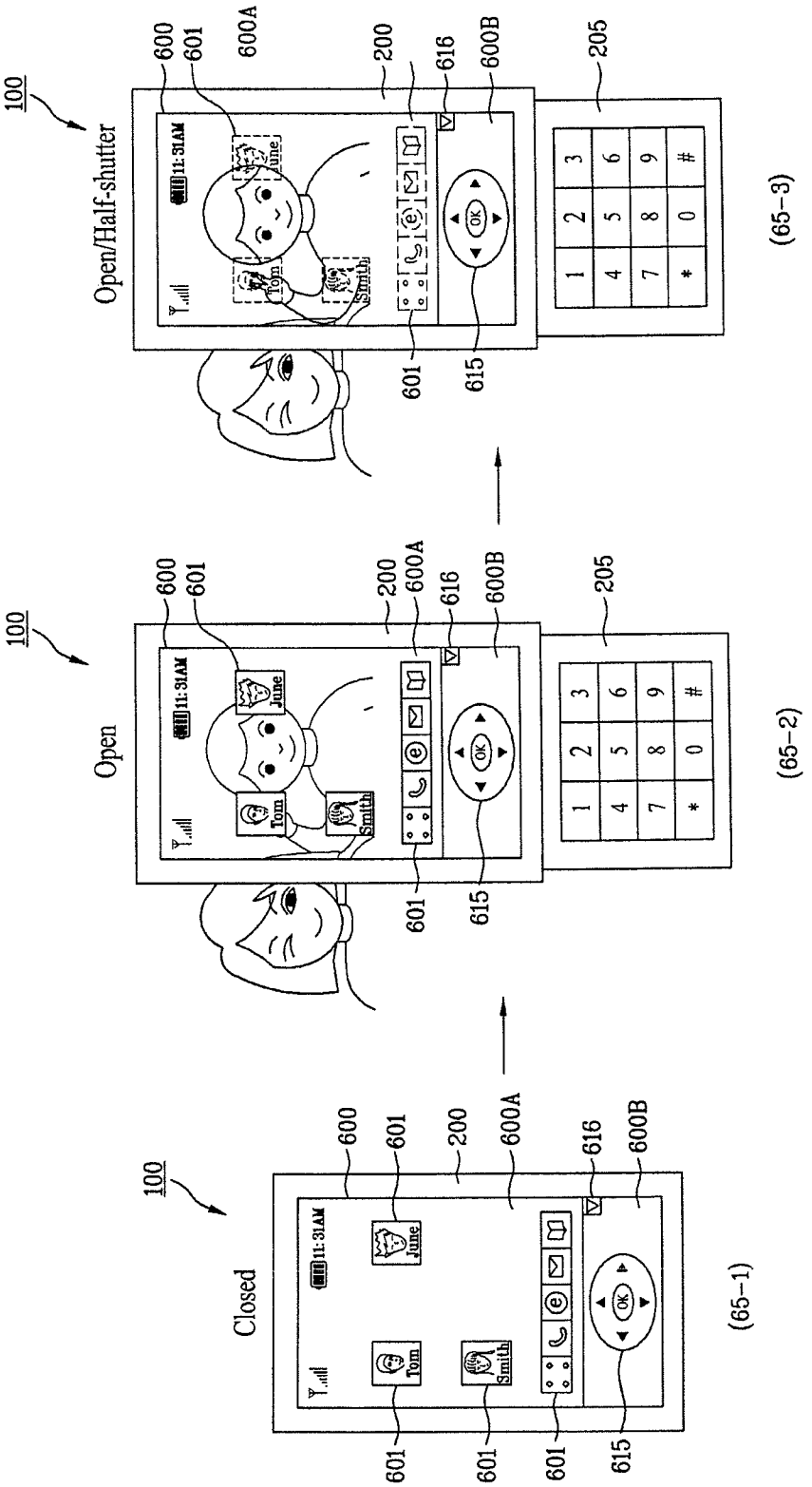
100
Closed
11:31AM
Tom
June
Smith
OK
600
601
200
600A
616
600B
615
(65-1)
Open
205
1 2 3
4 5 6
7 8 9
* 0 #
(65-2)
Open/Half-shutter
(65-3)

FIG. 66

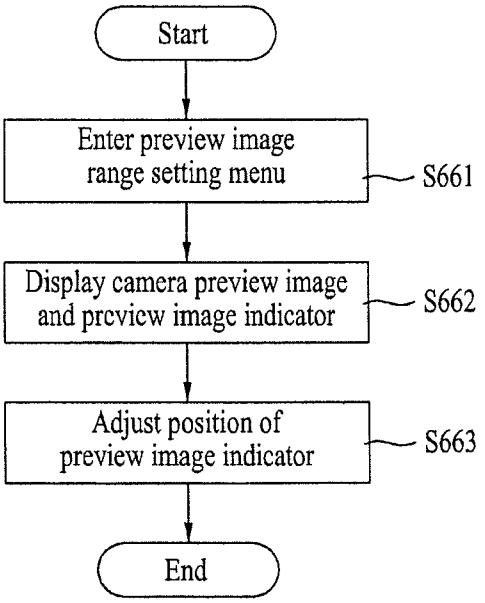
Start
Enter preview image range setting menu
S661
Display camera preview image and preview image indicator
S662
Adjust position of preview image indicator
S663
End

FIG. 67

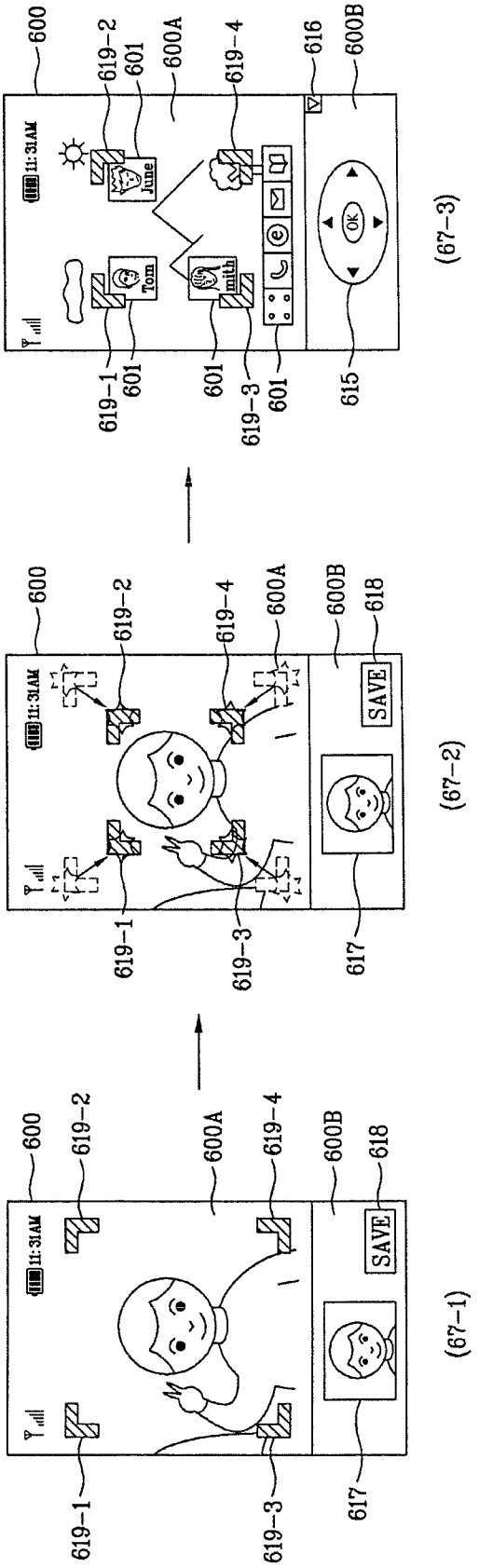
600
619-1
619-2
619-3
619-4
600A
600B
601
616
615
617
618
11:31AM
Tom
June
Smith
OK
SAVE
(67-1)
(67-2)
(67-3)

FIG. 68

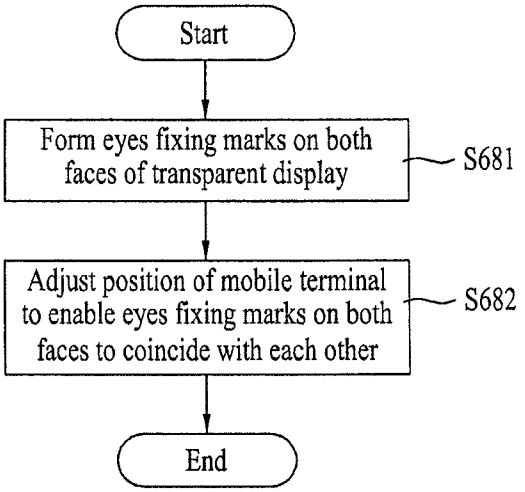
Start
Form eyes fixing marks on both faces of transparent display
S681
Adjust position of mobile terminal to enable eyes fixing marks on both faces to coincide with each other
S682
End

FIG. 69

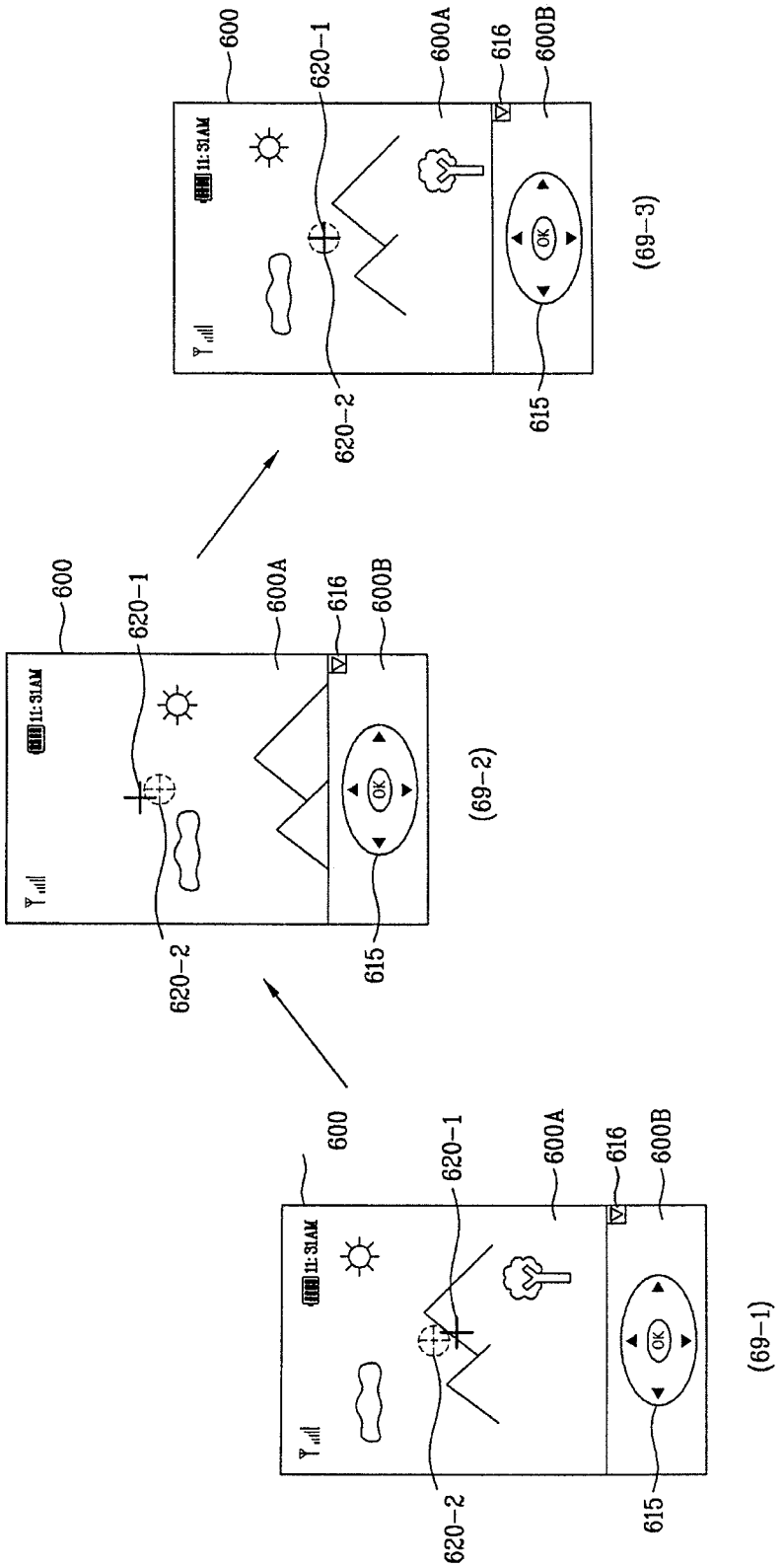

FIG. 70

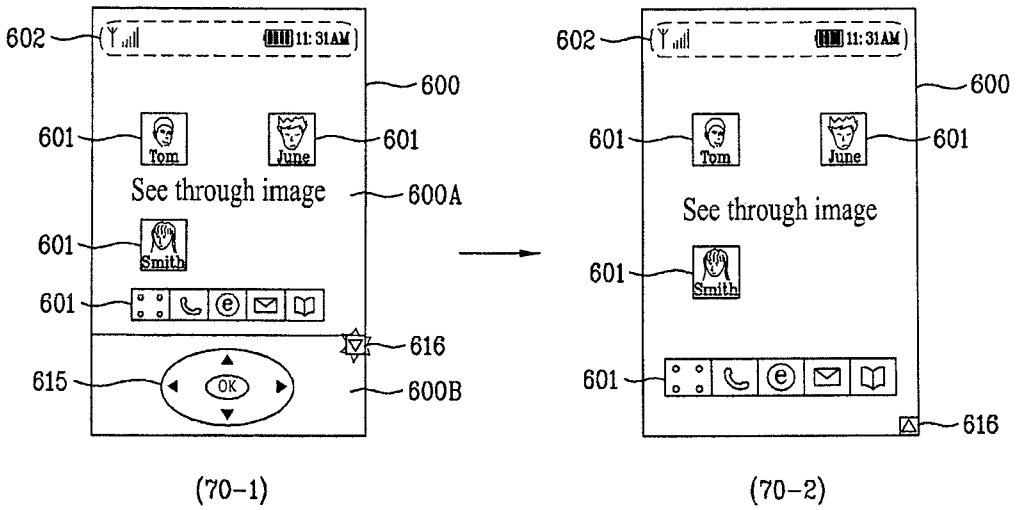
602
11:31AM
600
601
Tom
June
See through image
600A
Smith
616
615
OK
600B
(70-1)
(70-2)

FIG. 71

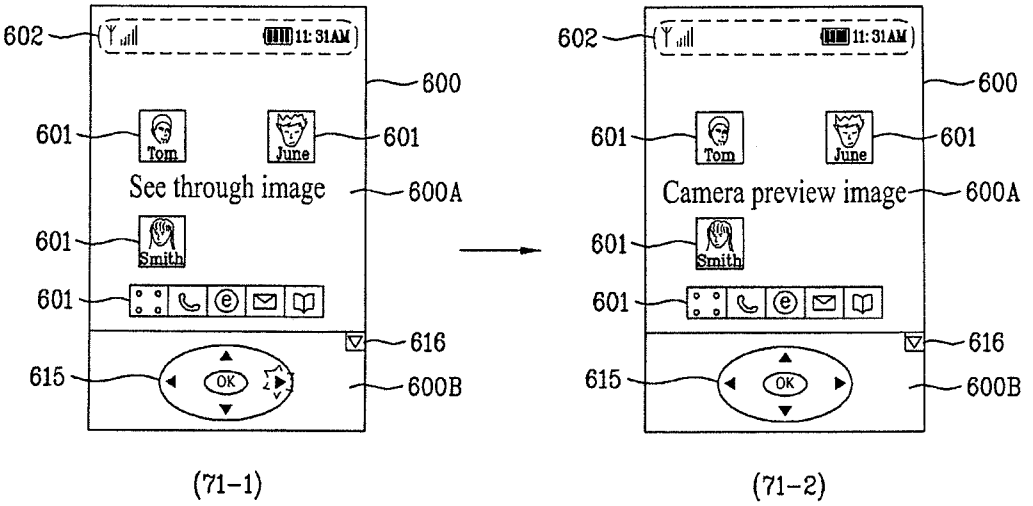
602
11:31AM
600
601
Tom
June
See through image
Camera preview image
600A
Smith
616
615
OK
600B
(71-1)
(71-2)

TERMINAL AND METHOD OF CONTROLLING THE SAME

CROSS REFERENCE TO RELATED APPLICATIONS

This application claims the benefit of the Korean Patent Application No. 10-2008-0050460, filed on May 29, 2008, which is hereby incorporated by reference as if fully set forth herein.

BACKGROUND OF THE INVENTION

1. Field of the Invention

The present invention relates to a mobile terminal and method of controlling the same. Although the present invention is suitable for a wide scope of applications, it is particularly suitable for performing image capturing with further consideration of user's convenience.

2. Discussion of the Related Art

A mobile terminal is a device which may be configured to perform various functions. Examples of such functions include data and voice communications, capturing images and video via a camera, recording audio, playing music files and outputting music via a speaker system, and displaying images and video on a display. Some terminals include additional functionality which supports game playing, while other terminals are also configured as multimedia players. More recently, mobile terminals have been configured to receive broadcast and multicast signals which permit viewing of contents, such as videos and television programs.

Generally, terminals can be classified into mobile terminals and stationary terminals according to a presence or non-presence of mobility. And, the mobile terminals can be further classified into handheld terminals and vehicle mount terminals according to availability for hand-carry.

There are ongoing efforts to support and increase the functionality of mobile terminals. Such efforts include software and hardware improvements, as well as changes and improvements in the structural components which form the mobile terminal.

Recently, the number of users taking pictures using a mobile terminal such as a mobile phone is increasing. And, a photographic function becomes one of major functions of a mobile terminal. Therefore, the demand for a scheme of facilitating a user to manipulate a photographic function of a mobile terminal further rises.

SUMMARY OF THE INVENTION

Accordingly, the present invention is directed to a terminal and method of controlling the same that substantially obviate one or more problems due to limitations and disadvantages of the related art.

An object of the present invention is to provide a terminal and method of controlling the same, by which user's convenience for photography using a terminal can be further enhanced.

Additional advantages, objects, and features of the invention will be set forth in part in the description which follows and in part will become apparent to those having ordinary skill in the art upon examination of the following or may be learned from practice of the invention. The objectives and other advantages of the invention may be realized and attained by the structure particularly pointed out in the written description and claims hereof as well as the appended drawings.

To achieve these objects and other advantages and in accordance with the purpose of the invention, as embodied and broadly described herein, a terminal according to the present invention includes a camera unit, a display unit, a user input unit having a shutter key for photography, and a control unit controlling at least one menu icons displayed in a standby mode (hereinafter "standby mode menu icons") to be displayed by being overlapped with a preview image obtained for the photography by the camera unit.

In another aspect of the present invention, a terminal includes a camera unit, a transparent display unit, a user input unit having a shutter key for photography, and a control unit controlling an image (hereinafter "a see through image") seen through the transparent display unit to play a role as a preview image for the photography.

In another aspect of the present invention, a method of controlling a terminal includes displaying a preview image for photography and displaying at least one or more icons displayed in a standby mode to be displayed by being overlapped with the preview image.

In a further aspect of the present invention, a method of controlling a terminal includes opening a first body and a second body mutually to enable an image to be seen through a transparent display unit, and controlling the see through image to play a role as a preview image for photography.

It is to be understood that both the foregoing general description and the following detailed description of the present invention are exemplary and explanatory and are intended to provide further explanation of the invention as claimed.

BRIEF DESCRIPTION OF THE DRAWINGS

The accompanying drawings, which are included to provide a further understanding of the invention and are incorporated in and constitute a part of this application, illustrate embodiment(s) of the invention and together with the description serve to explain the principle of the invention. In the drawings:

FIG. **1** is a block diagram of a mobile terminal in accordance with an embodiment of the present invention;

FIG. **2** is a perspective diagram of a front side of a mobile terminal according to an embodiment of the present invention;

FIG. **3** is a perspective diagram of a backside of the mobile terminal shown in FIG. **2**;

FIG. **4** is a block diagram of a wireless communication system in which a mobile terminal according to the present invention is operable;

FIG. **5** is an overview of mobile terminals each having a single TOLED (Transparent Organic Light Emitting Diode) according to an embodiment of the present invention;

FIG. **6** is an overview of mobile terminals each having a dual TOLED according to an embodiment of the present invention;

FIGS. **7**A and **7**B are overviews of a folder-type mobile terminal having a dual TOLED according to an embodiment of the present invention, which shows a mobile terminal having variable directions to display information according a posture of the mobile terminal;

FIG. **8** is an overview of a folder-type mobile terminal having a dual TOLED and a keypad according to an embodiment of the present invention;

FIG. **9** is an overview of a mobile terminal having a dual TOLED according to an embodiment of the present invention, which shows a mobile terminal having a folder rotatable by 360°;

FIG. **10** is an overview of a mobile terminal having a dual TOLED according to an embodiment of the present invention, which shows a mobile terminal capable of photographing even when closed;

FIG. **11** is a perspective view of a mobile terminal having a dual TOLED according to an embodiment of the present invention, which shows a mobile terminal capable of controlling a size of information output in cooperation with opening/closing of a folder;

FIG. **12**A and **12**B are overviews of a swivel-type mobile terminal having a dual TOLED according to an embodiment of the present invention;

FIG. **13** is an overview of a flip-type mobile terminal having a dual TOLED according to an embodiment of the present invention;

FIG. **14** is another overview of the flip-type mobile terminal of FIG. **13**;

FIG. **15** is another overview of the flip-type mobile terminal of FIG. **13**;

FIG. **16** is an overview of a mobile terminal having a dual TOLED according to an embodiment of the present invention, which shows a method of displaying information on the TOLED in cooperation with opening or closing of a sliding portion of the mobile terminal;

FIG. **17** is an overview of a bar-type mobile terminal having a dual TOLED according to an embodiment of the present invention;

FIG. **18** is an overview of a mobile terminal configured such that the rear surface of the bar-type mobile terminal of FIG. **17** can be used;

FIG. **19** is an overview of a watch-type mobile terminal having a single TOLED according to an embodiment of the present invention;

FIG. **20** is an overview of a folder-type mobile terminal having a single TOLED according to an embodiment of the present invention;

FIG. **21** is an overview showing a method for inputting information in a folder-type mobile terminal having a single TOLED according to an embodiment of the present invention;

FIG. **22** is an overview showing a configuration of a keypad for a folder-type mobile terminal having a single TOLED according to an embodiment of the present invention;

FIG. **23** is an overview of a folder-type mobile terminal having a TOLED according to an embodiment of the present invention, which shows a mobile terminal having a configuration in which information displayed on any one surface of the TOLED can be restricted;

FIG. **24** is an overview of a swivel-type mobile terminal having a single TOLED according to an embodiment of the present invention;

FIG. **25** is an overview of a slider-type mobile terminal having a single TOLED according to an embodiment of the present invention, which shows an information displaying method on the TOLED in cooperation with opening or closing of a sliding portion of the mobile terminal;

FIG. **26** is an overview of a bar-type mobile terminal having a single TOLED according to an embodiment of the present invention;

FIG. **27** is an overview of a bar-type mobile terminal having keypads at both surfaces of the mobile terminal of FIG. **26**;

FIG. **28** is an overview showing a configuration of a single display configured by overlapping a TOLED with a non-TOLED;

FIG. **29** is an overview of a bar-type mobile terminal having keypads with different functions at both surfaces of the mobile terminal of FIG. **26**;

FIG. **30** is an overview of a watch-type mobile terminal having a single TOLED and a solar cell in a rear surface thereof according to an embodiment of the present invention;

FIG. **31** is an overview of a mobile terminal having a touch pad at an upper surface of the solar cell of FIG. **30**;

FIG. **32** is an overview of a watch-type mobile terminal having a TOLED according to an embodiment of the present invention, which shows a mobile terminal having a touch pad at an upper surface of the TOLED;

FIGS. **33** to **38** are overviews showing a method for controlling a display of a mobile terminal which has a single TOLED according to an embodiment of the present invention;

FIGS. **39** to **44** are overviews showing a method for controlling a display of a mobile terminal having a dual TOLED according to an embodiment of the present invention;

FIG. **45** is an overview of a mobile terminal having a dual TOLED according to an embodiment of the present invention, which shows a method for controlling displays according to an overlapped state between the displays;

FIGS. **46**A to **46**C are overviews showing a method for controlling a touching operation under the state that the displays of FIG. **45** are completely overlapped with each other;

FIGS. **47**A and **47**B are overviews showing a method for controlling a touching operation under the state that the displays of FIG. **45** are partially overlapped with each other;

FIG. **48** is an overview showing a web browsing method for describing a main/sub window operation method in a mobile terminal according to an embodiment of the present invention;

FIGS. **49**A and **49**B are overviews showing a method for displaying a webpage in cooperation with a main/sub window operation method in a mobile terminal according to an embodiment of the present invention;

FIGS. **50**A and **50**B are overviews showing a method for moving a displayed object in cooperation with an open/closing operation of a mobile terminal having a dual TOLED according to an embodiment of the present invention;

FIGS. **51**A and **51**B are overviews showing a method for generating a displayed object in cooperation with an open/closing operation of a mobile terminal having a dual TOLED according to an embodiment of the present invention;

FIGS. **52** and **53** are overviews showing a method for changing an information displaying direction in a mobile terminal having a dual TOLED according to an embodiment of the present invention;

FIGS. **54** and **55** are overviews showing a method for changing an information displaying direction in a mobile terminal having a single TOLED according to an embodiment of the present invention;

FIG. **56** is an overview showing an operation related to the movement of a displayed object executed in cooperation with an open/closing operation of a mobile terminal having a dual TOLED according to an embodiment of the present invention;

FIG. **57** is a flowchart for a method of controlling a mobile terminal according to a first embodiment of the present invention;

FIGS. **58** to **60** are diagrams of display screen configurations for implementing a mobile terminal according to a first embodiment of the present invention;

FIG. **61** is a flowchart for a method of controlling a mobile terminal according to a second embodiment of the present invention;

FIG. **62** is a diagram of display screen configuration for implementing a mobile terminal according to a second embodiment of the present invention;

FIG. **63**A and FIG. **63**B are diagrams of a shutter key usable for a mobile terminal according to the present invention;

FIG. **64** is a flowchart for a method of controlling a mobile terminal according to a third embodiment of the present invention;

FIG. **65** is a diagram of display screen configuration for implementing a mobile terminal according to a third embodiment of the present invention;

FIG. **66** is a flowchart for a method of controlling a mobile terminal according to a fourth embodiment of the present invention;

FIG. **67** is a diagram of display screen configuration for implementing a mobile terminal according to a fourth embodiment of the present invention;

FIG. **68** is a flowchart for a method of controlling a mobile terminal according to a fifth embodiment of the present invention;

FIG. **69** is a diagram of display screen configuration for implementing a mobile terminal according to a fifth embodiment of the present invention; and

FIG. **70** and FIG. **71** are diagrams of display screen configurations for implementing a mobile terminal according to a sixth embodiment of the present invention.

DETAILED DESCRIPTION OF THE INVENTION

Reference will now be made in detail to the preferred embodiments of the present invention, examples of which are illustrated in the accompanying drawings. It is to be understood by those of ordinary skill in this technological field that other embodiments may be used, and structural, electrical, as well as procedural changes may be made without departing from the scope of the present invention. Wherever possible, the same reference numbers will be used throughout the drawings to refer to the same or like parts.

As used herein, the suffixes 'module', 'unit' and 'part' are used for elements in order to facilitate the disclosure only. Therefore, significant meanings or roles are not given to the suffixes themselves and it is understood that the 'module', 'unit' and 'part' can be used together or interchangeably.

The present invention can be applicable to a various types of terminals. Examples of such terminals include mobile as well as stationary terminals, such as mobile phones, user equipment, smart phones, DTV, computers, digital broadcast terminals, personal digital assistants, portable multimedia players (PMP) and navigators.

However, by way of non-limiting example only, further description will be with regard to a mobile terminal **100**, and it should be noted that such teachings may apply equally to other types of terminals.

FIG. **1** is a block diagram of a mobile terminal **100** in accordance with an embodiment of the present invention. FIG. **1** shows the mobile terminal **100** having various components, but it is understood that implementing all of the illustrated components is not a requirement. Greater or fewer components may alternatively be implemented.

FIG. **1** shows a wireless communication unit **110** configured with several commonly implemented components. For example, the wireless communication unit **110** typically includes one or more components which permit wireless communication between the mobile terminal **100** and a wireless communication system or network within which the mobile terminal is located. In case of non-mobile terminals, the wireless communication unit **110** can be replaced with a wire communication unit. The wireless communication unit **110** and wire communication unit can be commonly referred to as a communication unit.

A broadcast receiving module **111** receives a broadcast signal and/or broadcast associated information from an external broadcast managing entity via a broadcast channel. The broadcast channel may include a satellite channel and a terrestrial channel. The broadcast managing entity generally refers to a system which transmits a broadcast signal and/or broadcast associated information.

Examples of broadcast associated information include information associated with a broadcast channel, a broadcast program, a broadcast service provider, etc. For example, the broadcast associated information may include an electronic program guide (EPG) of digital multimedia broadcasting (DMB) and electronic service guide (ESG) of digital video broadcast-handheld (DVB-H).

The broadcast signal may be implemented, for example, as a TV broadcast signal, a radio broadcast signal, and a data broadcast signal. If desired, the broadcast signal may further include a broadcast signal combined with a TV or radio broadcast signal.

The broadcast receiving module **111** may be configured to receive broadcast signals transmitted from various types of broadcast systems. Nonlimiting examples of such broadcasting systems include digital multimedia broadcasting-terrestrial (DMB-T), digital multimedia broadcasting-satellite (DMB-S), digital video broadcast-handheld (DVB-H), the data broadcasting system known as media forward link only (MediaFLO®) and integrated services digital broadcast-terrestrial (ISDB-T). Receiving multicast signals is also possible. If desired, data received by the broadcast receiving module **111** may be stored in a suitable device, such as a memory **160**.

A mobile communication module **112** communicates wireless signals with one or more network entities such as a base station or Node-B. Such signals may represent, for example, audio, video, multimedia, control signaling, and data.

A wireless internet module **113** supports Internet access for the mobile terminal **100**. This module may be internally or externally coupled to the mobile terminal **100**. Suitable technologies for wireless internet may include, but are not limited to, WLAN (Wireless LAN) (Wi-Fi), Wibro (Wireless broadband), Wimax (World Interoperability for Microwave Access), and HSDPA (High Speed Downlink Packet Access). The wireless internet module can be replaced with a wire internet module in non-mobile terminals. The wireless internet module **113** and wire internet module may be commonly referred to as an internet module.

A short-range communication module **114** facilitates relatively short-range communications. Suitable technologies for short-range communication may include, but are not limited to, radio frequency identification (RFID), infrared data association (IrDA), ultra-wideband (UWB), as well as the networking technologies commonly referred to as Bluetooth and ZigBee.

A position-location module **115** identifies or otherwise obtains the location of the mobile terminal **100**. This module may be implemented using, for example, global positioning system (GPS) components which cooperate with associated satellites, network components, and combinations thereof.

According to the current technology, the GPS module **115** is able to precisely calculate current 3-dimensional position information based on longitude, latitude and altitude by calculating distance information and precise time information

from at least three satellites and then applying triangulation to the calculated information. Currently, location and time information are calculated using three satellites, and errors of the calculated location position and time information are then amended using another satellite. Besides, the GPS module **115** is able to calculate speed information by continuously calculating a real-time current location.

An audio/video (A/V) input unit **120** is configured to provide audio or video signal input to the mobile terminal **100**. As shown, the A/V input unit **120** includes a camera **121** and a microphone **122**. The camera **121** receives and processes image frames of still pictures or video.

A microphone **122** receives an external audio signal while the portable device is in a particular mode, such as phone call mode, recording mode or voice recognition mode. This audio signal is processed and converted into digital data.

The portable device, and specifically the A/V input unit **120**, typically includes assorted noise removing algorithms to remove noise generated in the course of receiving the external audio signal. Data generated by the A/V input unit **120** may be stored in the memory **160**, used by the output unit **150**, or transmitted via one or more modules of communication unit **110**. If desired, two or more microphones and/or cameras may be used.

A user input unit **130** generates input data responsive to user manipulation of an associated input device or devices. Examples of such devices include a keypad, a dome switch, a touchpad such as static pressure/capacitance, a jog wheel and a jog switch. A specific example is one in which the user input unit **130** is configured as a touchpad in cooperation with a display, which will be described in more detail below.

A sensing unit **140** provides status measurements of various aspects of the mobile terminal **100**. For example, the sensing unit may detect an open/close status of the mobile terminal **100**, relative positioning of components such as a display and keypad of the mobile terminal, a change of position of the mobile terminal or a component of the mobile terminal, a presence or absence of user contact with the mobile terminal, orientation or acceleration/deceleration of the mobile terminal.

If the mobile terminal **100** is configured as a slide-type mobile terminal, the sensing unit **140** may sense whether a sliding portion of the mobile terminal is open or closed. Other examples include the sensing unit **140** sensing the presence or absence of power provided by the power supply **190**, the presence or absence of a coupling or other connection between the interface unit **170** and an external device.

An interface unit **170** is often implemented to couple the mobile terminal with external devices. Typical external devices include wired/wireless headphones, external chargers, power supplies, storage devices configured to store data such as audio, video, and pictures, as well as earphones and microphones. The interface unit **170** may be configured using a wired/wireless data port, audio input/output ports, video input/output port, a card socket for coupling to a memory card, a subscriber identity module (SIM) card, a user identity module (UIM) card, or removable user identity module (RUIM) card).

When the mobile terminal **110** is connected to an external cradle, the interface unit **170** becomes a passage for supplying the mobile terminal **100** with a power from the cradle or a passage for delivering various command signals inputted from the cradle by a user to the mobile terminal **100**. Each of the various command signals inputted from the cradle or the power can operate as a signal enabling the mobile terminal **100** to recognize that it is correctly loaded in the cradle.

An output unit **150** generally includes various components that support the output requirements of the mobile terminal **100**. A display **151** is typically implemented to visually display information associated with the mobile terminal **100**. For example, if the mobile terminal **100** is operating in a phone call mode, the display will generally provide a user interface or graphical user interface that includes information associated with placing, conducting, and terminating a phone call. As another example, if the mobile terminal **100** is in a video call mode or a photographing mode, the display **151** may additionally or alternatively display images associated with these modes.

One particular implementation includes the display **151** configured as a touch screen working in cooperation with an input device, such as a touchpad. This configuration permits the display **151** to function both as an output device and an input device.

The display **151** may be implemented using known display technologies including a liquid crystal display (LCD), a thin film transistor-liquid crystal display (TFT-LCD), an organic light-emitting diode display (OLED), a transparent OLED, a flexible display and a three-dimensional display.

And, some of them can be configured transparent to view external environment. This can be named a transparent display. One representative example of the transparent displays includes a transparent LCD, transparent OLED (TOLED) and the like.

The mobile terminal **100** may include one or more of displays **151**. An example of a two-display embodiment is one in which one display **151** is configured as an internal display viewable when the terminal is in an opened position and a second display **151** configured as an external display viewable in both the open and closed positions.

The touch screen can be configured to detect a touch input pressure as well as a touch input position and size.

Meanwhile, a proximity sensor (not shown in the drawing) can be provided within or around the touch screen. The proximity sensor detects an object approaching a prescribed detecting surface or a presence or non-presence of an object existing around itself using an electromagnetic power or infrared rays without mechanical contact. Hence, the proximity sensor is superior to a contact sensor in lifespan and utilization.

Example for an operational principle of the proximity sensor is explained as follows. First of all, if an object approaches a sensor-detecting surface while an oscillation circuit oscillates a sine radio frequency, an oscillation amplitude of the oscillation circuit attenuates or stops. This change is converted to an electric signal to detect a presence or non-presence of the object. So, even if any material except a metallic comes between the RF oscillation proximity sensor and the object, a proximity switch is able to detect the object to detect without interference with the material.

In spite of not providing the proximity sensor, if the touch screen is electrostatic, it can be configured to detect the proximity of a pointer through an electric field change attributed to the proximity of the pointer.

So, in case that the pointer is placed in the vicinity of the touch screen without being actually contacted with the touch screen, it is able to detect a position of the pointer and a distance between the pointer and the touch screen. For clarity and convenience of explanation, an action for enabling the pointer approaching the touch screen to be recognized as placed on the touch screen is named 'proximity touch' and an action of enabling the pointer to actually come into contact with the touch screen is named 'contact touch'. And, a position, at which the proximity touch is made to the touch screen

using the pointer, means a position of the pointer vertically corresponding to the touch screen when the pointer makes the proximity touch.

If the proximity sensor is used, it is able to sense a proximity touch and its pattern (e.g., proximity touch distance, proximity touch direction, proximity touch speed, proximity touch position, proximity touch moving state, etc.). And, it is also able to output information corresponding to the sensed proximity touch action and the proximity touch pattern to the touch screen.

FIG. **1** further shows the output unit **150** having an audio output module **152** which supports the audio output requirements of the mobile terminal **100**. The audio output module **152** is often implemented using one or more speakers, buzzers, other audio producing devices, and combinations thereof.

The audio output module **152** functions in various modes such as call-receiving mode, call-placing mode, recording mode, voice recognition mode and broadcast reception mode. During operation, the audio output module **152** outputs audio relating to a particular function or status, such as call received, message received, or errors.

The output unit **150** is further shown having an alarm **153**, which is commonly used to signal or otherwise identify the occurrence of a particular event associated with the mobile terminal **100**. Typical events include call received, message received and user input received.

An example of a signal provided by the output unit **150** is tactile sensations. For example, the alarm **153**, which includes at least one vibrator, may be configured to vibrate responsive to the mobile terminal **100** receiving a call or message. As another example, vibration is provided by the alarm **153** responsive to receiving user input at the mobile terminal **100**, thereby providing a tactile feedback mechanism. It is understood that the various signals provided by the components of output unit **150** may be separately performed or performed using any combination of such components.

A memory **160** is generally used to store various types of data to support the processing, control, and storage requirements of the mobile terminal **100**. Examples of such data include program instructions for applications operating on the mobile terminal **100**, contact data, phonebook data, messages, pictures, and video.

Moreover, data for various patterns of vibration and/or sound outputted in case of a touch input to the touch screen can be stored in the memory **160**.

As map information can be stored in the memory **160**, user's convenience can be further provided in a manner of providing the map information to a user if necessary. Moreover, a recent use history or a cumulative use frequency of each menu in the mobile terminal can be stored in the memory **160**.

The memory **160** shown in FIG. **1** may be implemented using any type or combination of suitable volatile and non-volatile memory or storage devices including random access memory (RAM), static random access memory (SRAM), electrically erasable programmable read-only memory (EEPROM), erasable programmable read-only memory (EPROM), programmable read-only memory (PROM), read-only memory (ROM), magnetic memory, flash memory, magnetic or optical disk, card-type memory, or other similar memory or data storage device.

A controller **180** typically controls the overall operations of the mobile terminal **100**. For example, the controller **180** performs the control and processing associated with voice calls, data communications, instant message communication, video calls, camera operations and recording operations.

The controller **180** may include a multimedia module **181** that provides multimedia playback. The multimedia module **181** may be configured as part of the controller **180**, or implemented as a separate component.

Moreover, the controller **180** is able to perform a pattern recognizing process for recognizing a writing input and a picture drawing input carried out on the touch screen as characters or images, respectively.

Moreover, the controller **180** is able to perform TTS (text to speech) conversion for converting text to speech or STT (speech to text) conversion for converting speech to text.

A power supply **190** provides power required by the various components for the mobile terminal **100**. The power may be internal power, external power, or combinations thereof.

Various embodiments described herein may be implemented in a computer-readable medium using, for example, computer software, hardware, or some combination thereof. For a hardware implementation, the embodiments described herein may be implemented within one or more application specific integrated circuits (ASICs), digital signal processors (DSPs), digital signal processing devices (DSPDs), programmable logic devices (PLDs), field programmable gate arrays (FPGAs), processors, controllers, micro-controllers, microprocessors, other electronic units designed to perform the functions described herein, or a selective combination thereof. Such embodiments may also be implemented by the controller **180**.

For a software implementation, the embodiments described herein may be implemented with separate software modules, such as procedures and functions, each of which perform one or more of the functions and operations described herein. The software codes can be implemented with a software application written in any suitable programming language and may be stored in memory such as the memory **160**, and executed by a controller or processor, such as the controller **180**.

The mobile terminal **100** may be implemented in a variety of different configurations. Examples of such configurations include folder-type, slide-type, bar-type, rotational-type, swing-type and combinations thereof. For clarity, further disclosure will primarily relate to a slide-type mobile terminal **100**. However such teachings apply equally to other types of mobile terminals.

FIG. **2** is a perspective view of a front side of a mobile terminal **100** according to an embodiment of the present invention. In FIG. **2**, the mobile terminal **100** is shown having a first body **200** configured to slidably cooperate with a second body **205**.

The user input unit **130** described in FIG. **1** may include a first input unit such as function keys and four directional keys **210**, a second input unit such as keypad **215** and a third input unit such as side keys **245**. The function keys **210** are associated with the first body **200**, and the keypad **215** is associated with the second body **205**. The keypad includes various keys such as numbers, characters, and symbols to enable a user to place a call, prepare a text or multimedia message, and otherwise operate the mobile terminal **100**.

Moreover, a third user input unit **245** includes at least two keys to work as a shutter key for taking pictures and a zoom adjust key, respectively.

The first body **200** slides relative to the second body **205** between open and closed positions. Although not shown in drawings, in case of a folder-type mobile terminal, a first body thereof folds and unfolds relative to a second body thereof between open and closed positions. In addition, in case of a

swing-type mobile terminal, a first body thereof swings relative to a second body thereof between open and closed positions.

In a closed position, the first body **200** is positioned over the second body **205** in such a manner that the keypad **215** is substantially or completely obscured by the first body **200**. In the open position, user access to the keypad **215** is possible. The function keys **210** are conveniently configured for a user to enter commands such as start, stop and scroll.

The mobile terminal **100** is operable in either a standby mode, in which it is able to receive a call or message and to receive and respond to network control signaling or an active call mode. Typically, the mobile terminal **100** functions in the standby mode in the closed position and in an active mode in the open position. This mode configuration may be changed as required or desired.

The first body **200** is shown formed from a first case **220** and a second case **225**. The second body **205** is shown formed from a first case **230** and a second case **235**. The first case **230** and second case **235** are usually formed from a suitably rigid material, such as injection molded plastic, or formed using metallic material, such as stainless steel (STS) and titanium (Ti).

In case that the display unit of the first body includes a transparent display, the first rear case **225** of the first body **200** is formed of a transparent material for the transparent display or can be configured to have an open partial area.

One or more intermediate cases may be provided between the first case **230** and second case **235** of one or both of the first body **200** and second body **205**. The first body **200** and second body **205** are typically sized to receive electronic components necessary to support operation of the mobile terminal **100**.

The first body **200** is shown having a camera **121** and audio output unit **152**, which is configured as a speaker, positioned relative to the display **151**. The camera **121** may be constructed such that it can be selectively positioned relative to first body **200** such as by rotation or, swiveling.

The function keys **210** are positioned adjacent to a lower side of the display **151**, which is shown implemented as an LCD or OLED. The display may also be configured as a touch screen having an underlying touchpad which generates signals responsive to user contact with the touch screen, such as with a finger or stylus.

The second body **205** is shown having a microphone **122** positioned adjacent to the keypad **215** and having side keys **245**, which are one type of a user input unit as mentioned above, positioned along the side of second body **205**. Preferably, the side keys **245** may be configured as hot keys, such that the side keys are associated with a particular function of the mobile terminal **100**. An interface unit **170** is shown positioned adjacent to the side keys **245**, and a power supply **190** in a form of a battery is shown located on a lower portion of the second body **205**.

FIG. **3** is a rear view of the mobile terminal **100** shown in FIG. **2**. FIG. **3** shows the second body **205** having a camera **121** with an associated flash **250** and mirror **255**. The flash **250** operates in conjunction with the camera **121**. The mirror **255** is useful for assisting a user to position the camera **121** in a self-portrait mode.

The camera **121** of the second body **205** faces a direction which is opposite to a direction faced by the camera **121** of the first body **200** (FIG. **2**). Each of the cameras **121** of the first body **200** and second body **205** may have the same or different capabilities.

In an embodiment, the camera **121** of the first body **200** operates with a relatively lower resolution than the camera **121** of the second body **205**. Such an arrangement works well during a video conference, for example, in which reverse link bandwidth capabilities may be limited. The relatively higher resolution of the camera **121** of the second body **205** (FIG. **3**) is useful for obtaining higher quality pictures for later use or for communicating with other parties.

The second body **205** also includes an audio output module **152** located on an upper side of the second body and configured as a speaker. The audio output modules **152** of the first body **200** and second body **205** may cooperate to provide stereo output. Moreover, either or both of these audio output modules **152** may be configured to operate as a speakerphone.

A broadcast signal receiving antenna **260** is shown located at an upper end of the second body **205**. The antenna **260** functions in cooperation with the broadcast receiving module **111** (FIG. **1**). The antenna **260** may be fixed or configured to retract into the second body **205**. The rear side of the first body **200** includes a slide module **265**, which slidably couples with a corresponding slide module located on the front side of the second body **205**.

It is understood that the illustrated arrangement of the various components of the first body **200** and second body **205** may be modified as required or desired. In general, some or all of the components of one body may alternatively be implemented on the other body. In addition, the location and relative positioning of such components are not critical to many embodiments, and therefore, the components may be positioned at locations which differ from those shown by the representative figures.

The mobile terminal **100** of FIGS. **1-3** may be configured to operate within a communication system which transmits data via frames or packets, including both wireless and wired communication systems, and satellite-based communication systems. Such communication systems use different air interfaces and/or physical layers.

Examples of air interfaces used by the communication systems include example, frequency division multiple access (FDMA), time division multiple access (TDMA), code division multiple access (CDMA), the universal mobile telecommunications system (UMTS), the long term evolution (LTE) of the UMTS, and the global system for mobile communications (GSM). By way of non-limiting example only, further description will relate to a CDMA communication system, but such teachings apply equally to other system types.

Referring to FIG. **4**, a CDMA wireless communication system is shown having a plurality of mobile terminals **100**, a plurality of base stations **270**, a plurality of base station controllers (BSCs) **275**, and a mobile switching center (MSC) **280**.

The MSC **280** is configured to interface with a conventional public switch telephone network (PSTN) **290**. The MSC **280** is also configured to interface with the BSCs **275**.

The BSCs **275** are coupled to the base stations **270** via backhaul lines. The backhaul lines may be configured in accordance with any of several known interfaces including, for example, E1/T1, ATM, IP, PPP, Frame Relay, HDSL, ADSL, or XDSL. It is to be understood that the system may include more than two BSCs **275**.

Each base station **270** may include one or more sectors, each sector having an omni-directional antenna or an antenna pointed in a particular direction radially away from the base station **270**. Alternatively, each sector may include two antennas for diversity reception. Each base station **270** may be configured to support a plurality of frequency assignments, with each frequency assignment having a particular spectrum (e.g., 1.25 MHz, 5 MHz).

The intersection of a sector and frequency assignment may be referred to as a CDMA channel. The base stations **270** may also be referred to as base station transceiver subsystems (BTSs). In some cases, the term "base station" may be used to refer collectively to a BSC **275**, and one or more base stations **270**. The base stations **270** may also be denoted as "cell sites." Alternatively, individual sectors of a given base station **270** may be referred to as cell sites.

A terrestrial digital multimedia broadcasting (DMB) transmitter **295** is shown broadcasting to mobile terminals **100** operating within the system. The broadcast receiving module **111** (FIG. **1**) of the mobile terminal **100** may be configured to receive broadcast signals transmitted by the DMB transmitter **295**. Similar arrangements may be implemented for other types of broadcast and multicast signaling as discussed above.

FIG. **4** further depicts several global positioning system (GPS) satellites **300**. Such satellites facilitate locating the position of some or all of the mobile terminals **100**. Two satellites are depicted, but it is understood that useful positioning information may be obtained with greater or fewer satellites.

The position-location module **115** (FIG. **1**) of the mobile terminal **100** is typically configured to cooperate with the satellites **300** to obtain desired position information. It is to be appreciated that other types of position detection technology, such as location technology that may be used in addition to or instead of GPS location technology, may alternatively be implemented. Some or all of the GPS satellites **300** may alternatively or additionally be configured to provide satellite DMB transmissions.

During typical operation of the wireless communication system, the base stations **270** receive sets of reverse-link signals from various mobile terminals **100**. The mobile terminals **100** engage in calls, messaging, and other communications.

Each reverse-link signal received by a given base station **270** is processed within that base station **270**. The resulting data is forwarded to an associated BSC **275**.

The BSC **275** provides call resource allocation and mobility management functionality including soft handoffs between the base stations **270**. The BSCs **275** also route the received data to the MSC **280**, which provides additional routing services for interfacing with the PSTN **290**.

Similarly, the PSTN interfaces with the MSC **280**, and the MSC **280** interfaces with the BSCs **275**. The BSCs **275** control the base stations **270** to transmit sets of forward-link signals to the mobile terminals **100**.

In the following description, structures and interfacing methods for operations and actions of a mobile terminal according to the present invention are explained.

1. Configuration of a Mobile Terminal according to an Embodiment of the Present Invention

A mobile terminal according to an embodiment of the present invention will be divided, according to a structure of a display, into a mobile terminal having a dual display and a mobile terminal having a single display. In more detail, FIG. **5** shows various types of mobile terminals each having the single display, and FIG. **6** shows various types of mobile terminals each having the dual display. Each mobile terminal having the dual display and the single display as shown in FIGS. **5** and **6** may be applicable to various types of mobile terminals, including folder-type (a), flip-type (b), slide-type (c), bar-type (d), rotating-type (e) (e.g., swivel-type or swing-type), watch-type (f), or the like.

Hereinafter, a mobile terminal having the single or dual display may have a transparent display. In addition, a non-transparent display may further be provided. The transparent display and the non-transparent display may be configured to be overlapped with each other or be separately provided. That is, the single display shown in FIG. **5** may be configured as one display module having the transparent display and the non-transparent display being overlapped with each other or be implemented only with the transparent display, whereas the dual display shown in FIG. **6** may be configured to have the transparent display and the non-transparent display separately provided.

In addition, in all embodiments, the transparent display may be defined as a Transparent OLED (TOLED), and the non-transparent display may be defined as the display module **151** or a Liquid Crystal Display (LCD). However, the transparent and non-transparent displays are not limited to the TOLED and the LCD, respectively. Also, the transparent display may be a permeable display having both displayable surfaces (e.g., inner surface-outer surface, or lower surface-upper surface). Further, the embodiments disclosed in the present invention may be applied to all types of mobile terminal; however, depending on embodiments, a certain type of mobile terminal may be illustrated, which is appropriate for the sake of explanation.

Dual Display-Folder-Type Mobile Terminal

FIGS. **7**A and **7**B are overviews of a folder-type mobile terminal having a dual transparent display according to an embodiment of the present invention, which shows a mobile terminal having variable directions to display information according to a posture of the mobile terminal. As shown in FIGS. **7**A and **7**B, a folder-type mobile terminal according to an embodiment of the present invention may be configured such that a TOLED **154** is disposed at a folding portion **410** and a LCD **151** is disposed at a main body portion **400**. Further, the LCD **151** may operate as a main display and the TOLED **154** may operate as a sub display.

Such positions of the TOLED **154** and the LCD **151** may also be changed, and accordingly, their functions as the main and sub displays may also be changed. For example, under the open position of the folding portion **410**, the TOLED **154** may serve as a main display while the LCD **151** may serve as a sub display. Also, the LCD **151** can display an interactive keypad in one embodiment. In addition, under the closed state of the folding portion **410** of the mobile terminal, if the TOLED **154** independently operates, the operation of the LCD **151** at the main body portion **400** can be blocked such that it cannot interrupt the displaying of the TOLED **154**.

Further, the TOLED **154** and the LCD **151** may be overlapped by a touchpad on any one of their upper or lower surface, so as to be useable as touch screens. Hereinafter, although not separately mentioned in every embodiment of the present invention, it is assumed that the TOLED **154** and the LCD **151** function as a touch screen. Also, the folder-type mobile terminal may be configured for its folding portion to be folded (closed) or unfolded (opened) in a vertical direction (i.e., up and down direction) or in a horizontal direction (i.e., right and left direction), according to its posture (i.e., its rotational direction). Thus, the mobile terminal may detect its posture (i.e., the rotational direction) and also rotate information output on the TOLED **154** or the LCD **151** for output according to its detected posture (i.e. the rotational direction).

In addition, FIG. **7**A is an overview illustrating a method for displaying information when the folding portion **410** is open or closed in the vertical direction, and FIG. **7**B is an overview illustrating a method for displaying information when the folding portion **410** is open or closed in the horizontal direction. Further, FIG. **8** is an overview of a folder-type mobile terminal having a dual transparent display

according to an embodiment of the present invention, which shows a mobile terminal further having a keypad and a display. Also, the mobile terminal shown in FIG. **8** may be configured such that TOLED **154** is disposed at the folding portion **410** and the LCD **151** and keypad of the user input unit **130** are disposed at the main body portion **400**. The TOLED **154** may also operate as a main display.

Preferably, the TOLED **154** serving as the main display executes and displays most of functions and operations of the mobile terminal including a multimedia function and communication function. On the other hand, the LCD **151** at the main body portion **400** executes operations associated with the keypad of the user input unit **130** and calls. When the TOLED **154** independently operates under the closed state of the folding portion **410**, the emission of backlights in a dome keypad may preferably be prevented, so as to protect the displaying of the TOLED **154** from the interference of the emission.

FIG. **8**(*a*) is a perspective view of a front face of the folder-type mobile terminal having a transparent display according to an embodiment of the present invention, and FIG. **8**(*b*) is a perspective view of a rear face thereof. Further, FIG. **9** is an overview of a mobile terminal having a dual transparent display according to an embodiment of the present invention, which shows a mobile terminal having a folding portion rotatable by 360°.

Also, the mobile terminal shown in FIG. **9** may be configured to have the TOLED **154** disposed at the folding portion **410** and the LCD **151** and keypad **131** of the user input unit **130** both disposed on the main body portion **400**. Also, the TOLED **154** and the LCD **151** can display various types of information by dividing them according to their purposes of use. For instance, the TOLED **154** may display as the main display information related to most of the functions and operations executed in the mobile terminal as well as the multimedia function and the communication function, while the LCD **151** may display as the sub display telephone numbers input for placing a call or additional information.

Further, the mobile terminal according to this embodiment can implement a dual look by configuring a hinge **402** disposed between the folding portion **410** and the main body portion **400** to be rotatable by 360°. That is, as shown in FIGS. **9**(*a*) to **9**(*d*), the mobile terminal can be folded by rotating the main body portion **400** by 360° around the hinge **402**.

Next, FIG. **10** is an overview of a mobile terminal having a dual transparent display according to an embodiment of the present invention, which shows the mobile terminal being capable of photographing in a state of a folder being closed. As shown, the mobile terminal may be configured such that TOLED **154** is disposed at the folding portion **410** and the LCD **151** and keypad **131** of the input unit **130** are both disposed at the main body portion **400**. Further, the TOLED **154** may operate as a main display and the LCD **151** may operate as a sub display. For example, the TOLED **154** serving as the main display can display information related to most of the functions and operations of the mobile terminal including the multimedia function and communication function, while the LCD **151** can display a telephone number input for placing a call on the keypad and additional information such as an indicator.

In addition, the mobile terminal may further be provided with the camera **121** disposed between the LCD **151** and the keypad **131**. By disposing the camera **121** between the LCD **151** and the keypad **131**, a user can photograph an object to be taken or photograph himself in a self-portrait mode not only in the open sate of the folding portion **410** but also in the closed state. This is because the photographing operation can be executed through the TOLED **154**.

Also, in the closed state of the folding portion **410**, the camera **121** is located at a central portion of the rear side of the TOLED **154**. Hence, assuming as mentioned above that a video call is attempted in the closed state of the folding portion **410**, another party's image is displayed on the TOLED **154**, and the camera **121** is located at the rear side of the other party's image displayed on the TOLED **154**. Accordingly, when the user faces the other party's image displayed on the TOLED **154**, an effect is generated as if the user directly faces the camera **121**. Therefore, the controller **180** can send the user's face image to the other party's terminal by using the camera **121**. Thus, the other party can feel like they are directly talking with the user. That is, because the parties are looking directly into the cameras when they are conducting a video call between each other, the parties feel as if they are directly talking to each other.

In another embodiment, a bar-type mobile terminal can be configured such that the camera **121** is disposed at a central portion of a lower side of the TOLED **154** and an object viewed through the TOLED **154** can be photographed. Here, an image (interference image) displayed on the TOLED **154** may be photographed together with the object. In this instance, such image of the object can be compensated using preset compensation data. If the interference image is included in the image of the object by more than a certain reference, the transparency of the TOLED **154** increases such that the interference image can be reduced by a commensurable level.

Also, when using a self-portrait mode, the mobile terminal having the TOLED **154** may be configured to display a preview image of the camera **121** on a non-overlapped portion between the camera **121** and the TOLED **154**. For example, when a folding portion having the TOLED **154** is slid up to operate a self-portrait mode in a slide-type mobile terminal, the preview image can be displayed on the slid-up portion of the TOLED **154**.

In addition, if other information (e.g., multimedia image information) is being displayed on the TOLED **154**, the controller **180** can simultaneously display both the multimedia image information and the preview image of the camera **121** by adjusting the transparency and color of the TOLED **154**. Further, an image to be displayed on the TOLED **154** can manually be changed by the user's input. Also, to receive the user's input, the mobile terminal may include a sensor for detecting information such as an inclination, touching, key input, pressure, proximity, voice or the like.

Next, FIG. **11** is an overview of a mobile terminal having a dual transparent display according to an embodiment of the present invention, which shows a method for controlling a size of information output in cooperation with the opening or closing of a folding portion.

Further, as shown, the TOLED **154** is disposed on the folding portion **410** and the LCD **151** is disposed on the main body portion **400**. Also, each of the TOLED **154** and the LCD **151** may be obscured by a touchpad on their upper surface or a lower surface, so as to operate as a touch screen. As discussed above, any one of the TOLED **154** or LCD **151** may serve as a main display, and the other as a sub display. For example, the TOLED **154** may be used to display menu information for displaying operational states of the mobile terminal or to control a multimedia playback under the closed state of the mobile terminal. Also, the TOLED **154** may serve as a sub display to assist a main display (e.g., LCD **151**) according to various scenarios of user interfaces under the open state of the mobile terminal.

FIGS. **12**A and **12**B are overviews illustrating a swivel-type mobile terminal having a dual transparent display according to an embodiment of the present invention. As shown in FIGS. **12**A and **12**B, the swivel-type mobile terminal may be separately provided with the TOLED **154** and LCD **151**. Similar to the different types of mobile terminals having the dual display as above, the TOLED **154** and the LCD **151** may serve respectively as main display and sub display so as to display different information from each other.

For example, the TOLED **154** may be used as the main display in the open state of the folding portion **410**, the LCD **151** may serve as the sub display to display a keypad in a software configuration. Also, as shown in FIGS. **12**A and **12**B, the mobile terminal may have a swivel hinge **403** that allows the folding portion **410** to be rotated or moved to a certain angle (or position).

Dual Display-Flip-Type Mobile Terminal

FIG. **13** is an overview illustrating a flip-type mobile terminal having a dual transparent display according to an embodiment of the present invention. As shown in FIG. **13**, the flip-type mobile terminal may be configured such that a keypad is disposed on a flip portion **510** and the TOLED **154** and LCD **151** are all disposed on a main body portion **500**. Further, the TOLED **154** and the LCD **151** may operate as any of a main display or a sub display. For example, for displaying various information related to the mobile terminal (e.g., a current time, absent calls, message received, additional service related information, and the like) on the TOLED **154**, a user can check such information on any portion of a front or rear surface of the mobile terminal even in the closed state.

Next, FIG. **14** is an overview illustrating another embodiment of the flip-type mobile terminal of FIG. **13**, in which a separate sub-keypad **511** may be disposed on an outer surface of the flip portion **510**. Such arrangement of the sub-keypad **511** on the outer surface of the flip portion **510** allows the user to control the operation of the mobile terminal with reference to information displayed on the TOLED **154** even in the closed state of the flip portion **510**.

Further, FIG. **15** is another overview illustrating the flip-type mobile terminal of FIG. **13**. As shown in FIG. **15**, the TOLED **154** is disposed on the flip portion **510** and the LCD **11** is disposed on the LCD **151**. The TOLED **154** and the LCD **151** may operate as any of a main display or a sub display. For example, assuming that the TOLED **154** operates as a main display in the open state of the flip portion **510**, the LCD **151** serves as a sub display so as to display a keypad in a software configuration.

Also, if the TOLED **154** operates as a sub display in the closed state of the flip portion **510**, the TOLED **154** can display, for example, a software key for manipulating the mobile terminal, an operational state of the mobile terminal, wireless (radio) information transmitted/received to/from the mobile terminal, and various additional information (e.g., current time, absent calls, message received, additional service related information, and the like).

Dual Display-Slide-Type Mobile Terminal

FIG. **16** is an overview illustrating a mobile terminal having a dual transparent display according to an embodiment of the present invention, which shows a method for displaying information on a transparent display in cooperation with the opening or closing of a sliding portion of the mobile terminal.

As shown in FIG. **16**, the slide-type mobile terminal may be configured to have TOLED **154** disposed on a first body **200** and the LCD **151** disposed on a second body **205**. Further, the TOLED **154** and the LCD **151** may operate as any of a main display or a sub display, and each can display various different types of information. As one example, when the user photographs himself in a self-portrait mode, the user can easily do photograph himself based upon image information output on the TOLED **154**.

For example, previously, the user had to photographed himself in the self-portrait mode by using a mirror disposed adjacent to a camera. However, in the embodiment of the present invention, as shown in FIG. **16**(*c*), an image reflected on the camera **121** can be output as a preview image on a partial display region of the TOLED **154** (e.g., a display region seen from the rear side of the mobile terminal when being slid up). Hence, the user can photograph himself more easily by viewing an image displayed on the TOLED **154**. Also, as shown in FIG. **16**(*a*), the TOLED **154** transmits an image output on the LCD **151** when the sliding portion is in the closed state. Accordingly, even in the closed state of the sliding portion, it is possible to output and control basic information required to control the mobile terminal.

Dual Display-Bar-Type Mobile Terminal

FIG. **17** is an overview illustrating a bar-type mobile terminal having a dual transparent display according to an embodiment of the present invention. As shown in FIG. **17**, the bar-type mobile terminal may be configured to have the TOLED **154** disposed on an upper portion of a terminal body and the LCD **151** disposed on a lower portion thereof. Further, the TOLED **154** and the LCD **151** may operate as any of a main display or a sub display, and each can display various different types of information.

FIG. **18** is an overview of another embodiment of the bar-type mobile terminal of FIG. **17**, in which the mobile terminal is configured such that its rear surface can be used as another type of mobile terminal. As shown in FIG. **18**, the mobile terminal may be configured such that the LCD **151** is disposed below the TOLED **154** on a front surface of the mobile terminal and the keypad **131** is disposed below the TOLED **154** on a rear surface of the mobile terminal. Further, information displayed on the TOLED **154** is provided in order to represent that the information displayed on the front surface of the TOLED **154** is transmitted and displayed on the rear surface. Such information may be displayed by converting or rotating a displaying direction according to the user's manipulation.

Watch-Type Mobile Terminal

FIG. **19** is an overview illustrating a watch-type mobile terminal having a dual transparent display according to an embodiment of the present invention. As shown FIG. **19**, the watch-type mobile terminal may include the second body **205** having a watchstrap **133** connected thereto and having the LCD **151**, and the first body **200** connected to one side of the second body **205** by a hinge **201** to be open or closed and having the TOLED **154**. Hereinafter, the first body **200** may also be referred to as a cover.

Similar to the different types of mobile terminals having the dual display as discussed above, the TOLED **154** and the LCD **151** may operate as any of a main display or a sub display, and each can display various different types of information. Also, because the TOLED **154** is transparent, it can transmit information displayed on the LCD **151** in the closed state of the cover so as to output such information thereon, namely, the first body **200**. Also, in the open state of the first body **200**, the TOLED **154** and the LCD **151** can display different information from each other. Further, in the open state of the first body **200**, the TOLED **154** and the LCD **151** may be used either as displays or keypads.

Single Display-Folder-Type Mobile Terminal

FIG. **20** is an overview illustrating a folder-type mobile terminal having a single transparent display according to an embodiment of the present invention. As shown in FIG. **20**,

the mobile terminal may be configured to have the TOLED **154** disposed on the folding portion **410** and the keypad **131** disposed on the main body portion **400**. The keypad **131** may also be configured as a dome key or have backlights (not shown). Thus, when the folding portion **410** is in the open state, a user can input information by pressing the keypad **131**. Conversely, when the folding portion **410** is in the closed state, the user can input information by touching keys on corresponding positions with referring to the positions of the keys on the keypad **131**, which is viewable by being transmitted through the TOLED **154**.

Next, FIG. **21** is an overview illustrating an information input method in a folder-type mobile terminal having a single transparent display according to an embodiment of the present invention. As shown in FIG. **21**, the mobile terminal may be configured to have the TOLED **154** disposed on the folding portion **410** and a keypad or touchpad **155** disposed on the main body portion **400**. Further, the TOLED **154** may operate as a touch screen with a touchpad (or touch film) attached on its upper surface or lower surface. In addition, the keypad may include dome keys, or be configured as a printed pattern having various key-like patterns (e.g., numeral keys, navigation keys, symbol keys, character keys, and the like). Also, the keypad or touchpad **155** may be provided with backlights. The backlights may be configured by using Light Emitting Diodes (LEDs) or an Electroluminescence Sheet (EL).

Further, the backlight may automatically be driven by the controller **180** according to the user's manipulation or the opening/closing operation of the folding portion **410**. For example, when the folding portion is closed while specific information is being displayed on the TOLED **154**, the backlights may not be driven in order to prevent the keypad from being transmitted as a background. Also, in order to prevent the keypad from being transmitted as a background even when the backlights are not driven, the keypad or touchpad **155** may preferably be implemented to be flat or with a dark color. On the other hand, in the open state of the folding portion **410**, the user can input information by touching the keypad or touchpad **155**. That is, the user can touch the touchpad **155** to input cursive letters or to perform a touch and drag operation when the backlight is not driven.

Next, FIG. **22** is an overview illustrating a configuration of a keypad on a folder-type mobile terminal having a single transparent display according to an embodiment of the present invention. As shown in FIG. **22**, the mobile terminal may be configured such that the TOLED **154** is disposed on the folding portion **410**. Also, the touchpad **155**, various key patterns **156** and an EL **157** for backlights are disposed on the main body portion **400**.

In addition, the EL **157** may be a material emitting light onto a space to which an electrical force can come up to. Also, an EL Sheet is a planar light source in a paper form based on EL, and has many advantages that neon or phosphor does not have. As a material in a form of flexible thin-film, it requires low power consumption and can be cut in various forms suitable for applications. Also, the input unit **130** uses multi-layered EL sheets to activate EL sheets suitable for each backlight control algorithm. For example, the EL sheet may be configured as a key pattern combining numeral keys and navigation keys, a symbol key pattern, QWERTY key pattern, and the like. The controller **180** can then activate one of such key patterns according to the user's control or a preset backlight control algorithm. The input unit **130** using the EL sheets may also be implemented by a keypad or by a touchpad.

FIG. **23** is an overview illustrating a folder-type mobile terminal having a transparent display according to an embodiment of the present invention, which shows a configuration of the mobile terminal in which information displayed on one surface of the transparent display can be restricted. As shown in FIG. **23**(*a*), the mobile terminal may be configured such that the TOLED **154** is disposed on the folding portion **410** and the input unit **130** using a dome keypad, touch keypad, EL sheets or the like is disposed on the main body portion **400**.

In the closed state of the mobile terminal, the folding portion **410** is designed to expose part of the TOLED **154** as shown in FIG. **23**(*b*). Thus, the part of the TOLED **154** can be exposed to the user. Further, the folding portion **410** according to this embodiment may be provided with the TOLED **154** on both surfaces (i.e., inner surface and outer surface) such that displaying information can be executed both in the open and closed states of the mobile terminal.

FIG. **24** is an overview illustrating a swivel-type mobile terminal having a single transparent display according to an embodiment of the present invention. As shown in FIG. **24**, the swivel-type mobile terminal may be configured with the TOLED **154** and the keypad **131** separately disposed and the swivel hinge **403** connecting the folding portion **410** to the main body portion **400**. The swivel hinge **403** allows the folding portion **410** to be rotated or moved to a certain angle (or position).

Further, the controller **180** can change a displaying direction of information output on the TOLED **154** according to the rotation of the folding portion **410**. In addition, the TOLED **154** is allowed to display on both surfaces thereof. Accordingly, the controller **180** can allow information, which is displayed on a front surface (first surface) of the TOLED **154**, to be displayed on a rear surface (second surface) thereof, according to the rotation of the folding portion **410** or the opening/closing of the folding portion **410**.

Single Display-Slide-Type Mobile Terminal

FIG. **25** is an overview of a slide-type mobile terminal having a single transparent display according to an embodiment of the present invention, which shows a method for displaying information on the transparent display in cooperation with the opening or closing of a sliding portion. As shown in FIG. **25**, the slide-type mobile terminal may be configured to have the TOLED **154** disposed on the first body **200** and the keypad **131** disposed on the second body **205**. Also, the camera **121** is disposed at a rear surface of the second body **205**.

Thus, when a user wants to photograph himself or herself using the camera **121** disposed at the rear surface, the controller **180**, as shown in FIG. **25**(*c*), can output an image reflected on the camera **121** as a preview image on a partial display region of the TOLED **154** (i.e., a display region exposed to the rear surface when the mobile terminal is slid open). Accordingly, the user can view his own image displayed on the TOLED **154** so as to photograph himself or herself more easily.

Also, as shown in FIG. **25**(*a*), because the keypad **131** disposed on the second body **205** is transmitted through the TOLED **154** when the sliding portion is in the closed state, the user can input information by touching keys on corresponding positions and referring to the positions of the keys transmitted and displayed on the TOLED **154**. As such, the basic operations of the mobile terminal can be controlled even in the closed state of the sliding portion.

Single Display-Bar-Type Mobile Terminal

FIG. **26** is an overview illustrating a bar-type mobile terminal having a single transparent display according to an embodiment of the present invention. As shown in FIG. **26**,

the bar-type mobile terminal may be configured to have the TOLED **154** disposed at an upper portion of a front surface of a terminal body and the keypad **131** disposed at a lower portion thereof. The TOLED **154** is also exposed to the rear surface of the mobile terminal.

Therefore, as shown in FIG. **27**, the keypad **131** may further be disposed below the TOLED **154** shown on the rear surface of the terminal body. Accordingly, when an error is generated on a keypad (e.g., **131***a*) on one surface, the user can use a keypad (e.g., **131***b*) on another surface. Further, the information displayed on the TOLED **154** is provided in order to represent that information displayed on the front surface of the TOLED **154** is transmitted and displayed on the rear surface thereof. Such information may be displayed on any one of both surfaces of the TOLED **154**, according to a keypad which the user manipulates, or be displayed by converting or rotating its displaying direction.

Next, FIG. **28** is an overview illustrating a configuration of a single display obtained by overlapping a transparent display with a non-transparent display according to an embodiment of the present invention. In this description, a bar-type mobile terminal having such a single display will be described. As shown in FIG. **28**, the single display may be configured as a single module in which the TOLED **154** is overlapped with the LCD **151**.

Also, a touchpad (or a touch film) **155** may be attached to the upper surface of the module so as to be used as a touch screen. Further, the LCD **151** and TOLED **154** having such a single display may operate as one of a main display or sub display. That is, the LCD **151** and the TOLED **154** may display different information from each other or output the same information, and can make various visual effects according to a method for outputting such information. For example, when a user manipulates and outputs a menu or image, the image or menu can be shown with a cubic effect. In addition, the display may be applied not only to the bar-type mobile terminal but also every type of mobile terminal, such as folder-type, flip-type, slide-type, rotating-type (e.g., swivel-type, swing-type), or the like), or a watch-type.

FIG. **29** is an overview of a bar-type mobile terminal having keypads with different functions disposed on both surfaces of the bar type mobile terminal of FIG. **26**. As shown in FIG. **29**, the mobile terminal is configured to have a first keypad **131***a* disposed below the TOLED **154** on a front surface of the mobile terminal, and a second keypad **131***b* disposed below the TOLED **154** on a rear surface of the mobile terminal. Further, information displayed on the TOLED **154** is provided in order to represent that information displayed on the front surface of the TOLED **154** is transmitted and displayed onto the rear surface thereof. Such information may be displayed by converting or rotating its displaying direction according to the user's manipulation.

In addition, the first keypad **131***a* may have keys for inputting letters and numerals and several short keys for allowing an immediate execution of certain functions. The second keypad **131***b* may have navigation keys and short keys for allowing an immediate execution of other certain functions. Also, the short keys may be disposed both on the first and second keypads **131***a* and **131***b*.

Accordingly, such keys having different functions can be disposed on both of the front and rear surfaces of the mobile terminal such that the keys can be arranged with wider intervals there between, which ensures a simple keypad configuration, thereby preventing key input errors. For example, communication functions can effectively be executed on the surface having the first keypad **131***a* (e.g., the keypad containing keys for letters and numerals), while various multimedia functions such as playing games can effectively executed on the surface having the second keypad **131***b* (e.g., the keypad containing navigation keys or function keys).

Watch-Type Mobile Terminal

FIG. **30** is an overview illustrating a watch-type mobile terminal having a single transparent display and a solar cell on a rear surface thereof according to an embodiment of the present invention. As shown in FIG. **30**, the watch-type mobile terminal may include the second body **205** having a watchstrap **133** connected thereto and having a solar cell **191** disposed therein, and the first body **200** connected to one side of the second body **205** by the hinge **201** to be open or closed and having the TOLED **154**. The first body **200** may also be referred to as a cover.

In addition, the solar cell **191** is disposed inside the second body **200**, and the TOLED **154** is structurally disposed to cover the solar cell **191**. The first body **200** having the TOLED **154** may be configured using a sliding unit or the hinge **201** such that one side of the TOLED **154** can be opened or closed with respect to the second body **205**. Also, under the closed state of the first body **200**, the controller **180** can receive a user's command input via a touchpad disposed on an upper portion (upper surface, upper end, outer side) of the TOLED **154**.

In addition, dome keys **132** may be disposed on an upper portion of the solar cell **191**. Thus, when the TOLED **154** is opened, the controller **180** can receive a command input by a user using the dome keys **132**. The result of the command input using the dome keys **132** can be output on any one of both surfaces of the TOLED **154** according to the control of the controller **180**. Further, the solar cell **191** can generate electricity by using light transmitted through the TOLED **154**. Also, by arranging the solar cell **191** to receive light transmitted through the TOLED **154**, a greater area of the solar cell **191** is ensured, resulting in an increase in an amount of electricity generated.

Next, FIG. **31** is an overview of a mobile terminal having a touchpad on an upper surface of the solar cell of FIG. **30**. As shown in FIG. **31**, the second body **205** may include the solar cell **191** therein, and a touchpad **155** is disposed on an upper surface of the solar cell **191**. Also, the first body **200** having the TOLED **154** may be configured using a sliding unit or the hinge **201** such that at least one side thereof can be opened or closed with respect to the second body **205**.

Further, because the solar cell **191** is configured to be structurally covered with the TOLED **154**, the solar cell **191** can generate electricity by using light transmitted through the TOLED **154** even in the closed state of the first body **200**. In addition, the controller **180** may receive a command input by a user using the touchpad **155** in the open state of the first body **200**. The result of the command input using the touchpad **155** can be output on any one of both surfaces of the TOLED **154** according to the control of the controller **180**.

In addition, FIG. **32** is an overview of a watch-type mobile terminal having a transparent display according to an embodiment of the present invention, which shows a mobile terminal having a touchpad on an upper surface of the transparent display. As shown in FIG. **32**, the second body **205** may include the solar cell **191** therein, and the first body **200** is overlapped on the second body **205**. Further, the first body **200** may include the TOLED **154**, which is structurally located on an upper surface of the solar cell **191**. The touchpad **155** is also disposed on an upper surface of the TOLED **154**.

Therefore, the user can input a command through the touch pad **155** disposed on the upper surface of the TOLED **154**. Further, the solar cell **191** can generate electricity using light

transmitted through the TOLED **154**, regardless of whether or not the TOLED **154** displays information. Also, the amount of transmitted light depends on the transmittance of the TOLED **154**, and accordingly the amount of generated electricity may be different. In addition, when the solar cell **191** is configured with black color, the color sensitivity of the TOLED **154** may be effectively improved.

2. Operation of a Mobile Terminal According to an Embodiment of the Present Invention (Manipulation of User Interface (UI))

As mentioned above, a mobile terminal with a single display is configured as a display module in which a transparent display is overlapped with a non-transparent display, and a mobile terminal with a dual display is configured as two display modules in which a transparent display and a non-transparent display are separately disposed.

Further, the folder-type mobile terminal is a representative type of mobile terminal configured to have the dual display. The folder-type mobile terminal can display independent information on each display in cooperation with the opening or closing of a folding portion, or display several information associated with each other by overlapping each display. When displaying such information associated with each other by overlapping each display, a new visual effect can be generated.

Next, the operations and functions of a mobile terminal having the single display configured by overlapping a transparent display with a non-transparent display will be described according to embodiments of the present invention. Further, the operations and functions may be applied to all aforementioned types of mobile terminals (e.g., flip-type, folder-type, bar-type, slide-type, swivel-type and watch-type), etc.

A detailed description will now be given of a display controlling method according to operational states of a mobile terminal having a transparent display according to an embodiment of the present invention, a power saving method, and a display controlling method in connection with a specific function (e.g., a camera function) provided in the mobile terminal.

Screen Displaying Method of the Mobile Terminal with Transparent Display

A method for displaying a screen in a mobile terminal with a transparent display according to an embodiment of the present invention may be divided into a displaying method of the LCD **151** and the TOLED **154**, a controlling method related to a touching operation, and a controlling method related to a displaying operation.

Displaying Method of the LCD and TOLED

Next a description will be given of a method in which a user executes a photo album function and selects one image in the album to thereby display the selected image on a preview screen or link the image with another function according to an embodiment of the present invention. Also, in the method, the LCD **151** and the TOLED **154** are defined respectively as a main display and a sub display, and information to be displayed on each display is also classified, so as to provide a cubic effect.

FIGS. **33** to **38** are overviews for illustrating a displaying control method of a mobile terminal having a single transparent display according to an embodiment of the present invention, and particularly, illustrating a displaying control method of the LCD **151** and TOLED **154** when a photo album function is executed. In more detail,

Next, a method for controlling a display provided at each type of mobile terminal will be described representatively with respect to the bar-type mobile terminal shown in FIG. **33**. As shown in FIG. **33**, a display disposed on each type of mobile terminal is configured by overlapping the TOLED **154** and the LCD **151**. Further, the controller **180** may display a screen for executing or activating a photo album on the TOLED **154**. Also, an indicator **334** for indicating an operational state of the mobile terminal may also be displayed. The screen for executing the photo album may include images **331**, navigation keys **332** (hereinafter, referred to as 'software navigation keys') for moving the images **331**, and a cursor **333** for selecting one of the images **331**.

Also, a user can select one (e.g., image **335**) of the images **331** displayed on the photo album execution screen. Further, the controller **180** can display the selected image **335** on the LCD **151** as a preview image. The controller **180** can also change the selected image **335** into an image for an idle screen of the LCD **151**. FIGS. **34-38** illustrate the selected image being displayed in different configurations and on different types of mobile terminals.

In addition, the controller **180** can support an animation effect that the selected image is first dropped and then unfolded. Also, because the TOLED **154** has transmittance, even in the state of the photo album execution screen being displayed on the TOLED **154**, the user can view the idle screen image set for the LCD **151**. On the other hand, when the TOLED **154** is displayable on both of its surfaces, the same operation as aforementioned can be executed by controlling each front and rear surface of the TOLED **154** other than the LCD **151**. In addition, a component which controls the displaying operations of the LCD **151** and TOLED **154** according to an embodiment of the present invention may be a multimedia processor or a separate processor having a control function.

Also, the controller **180** can move the object between the TOLED **154** and the LCD **151** based on a double touch operation. For example, the user can touch an object displayed on the TOLED **154** and then touch a portion of the LCD **151**. Then, upon receiving a signal corresponding to the double touch operation, the controller **180** moves the object displayed on the TOLED **154** to the LCD **151** are where the user touched the LCD **151**. The user can also move the object displayed on the LCD **151** to the TOLED **154** using the reverse procedure. The controller **180** can also automatically move the displayed object between the first and second displays (i.e., the TOLED **154** and the LCD **151**) when there is insufficient area on a particular display (i.e., the TOLED **154** and the LCD **151**).

Hereinafter, a description will be given of operations of a mobile terminal separately having the transparent display and the non-transparent display in the following embodiments. In addition, the operations of the mobile terminal having the dual display may be applied to all aforementioned types of mobile terminals (e.g., flip-type, folder-type, bar-type, slide-type, swivel-type and watch-type, etc.).

FIGS. **39** to **44** are overviews illustrating a method for controlling a display of a mobile terminal having a transparent display according to an embodiment of the present invention, which shows a method for controlling the LCD **151** and TOLED **154** when executing a photo album function in a mobile terminal having a dual display. In more detail, FIGS. **39** to **44** respectively show a folder-type mobile terminal, a swivel-type mobile terminal, flip-type mobile terminal, slide-type mobile terminal, bar-type mobile terminal, and watch-type mobile terminal.

Next, a method for controlling a display provided at each type of mobile terminal will be described representatively with reference to a folder-type mobile terminal shown in FIG. **39**. As shown in FIG. **39**, in the mobile terminal having the

TOLED **154** and LCD **151** separately provided, the controller **180** can display a screen for executing a photo album on the TOLED **154**. In addition, the controller **180** may display on the TOLED **154** the images **331**, the software navigation keys **332**, and the cursor **333** for selecting one of the images **331**. The indicator **334** for indicating an operational state of the mobile terminal may also be displayed on the TOLED **154** as shown in FIG. **39**.

In addition, the user can select one image (e.g., image **335**) of the images **331** displayed on the screen for activating the photo album (see FIG. **39**(*a*)), and drag or flick the selected image **335** in a direction from the TOLED **154** to the LCD **151** (see FIG. **39**(*b*)). Accordingly, the controller **180** can display the dragged or flicked image **335** on the LCD **151** as a preview image (see FIG. **39**(*c*)). Also, the controller **180** can change the selected image **335** to be an idle screen image of the LCD **151**. In addition, the controller **180** can provide an animation effect that the selected image **335** is moved onto the LCD **151** to be then unfolded. FIGS. **40-44** illustrate the touching and dragging (or flicking) operation being performed on different types of mobile terminals.

Also, one embodiment of the present invention may separately provide a function key (hereinafter referred to as a screen switching function key) for switching contents respectively displayed on the TOLED **154** and the LCD **151**. The screen switching function key may have a toggling function. Also, the screen switching function key may be configured as a software key (or an execution icon) at one side (e.g., an indicator region or the like) of the TOLED **154** or be provided as a hardware key.

Upon selecting the screen switching function key, the controller **180** can change an icon shape of the screen switching function key, and simultaneously switch contents respectively displayed on the TOLED **154** and the LCD **151**. That is, the controller **180** can indicate that the screen switching function key has been selected. Afterwards, when the screen switching function key is selected again, the controller **180** converts the screen switching function key into its original shape, and then switches one more time the contents respectively displayed on the TOLED **154** and the LCD **151**.

A Method for Controlling a Touching Operation on the LCD and TOLED

The method for controlling the touching operation depends on overlapped states between the LCD **151** and the TOLED **154**, including a completely overlapped state, a partially overlapped state and a completely separated state. The mobile terminal having the transparent display according to an embodiment of the present invention uses different touching operations according to the overlapped states between the LCD **151** and the TOLED **154**.

FIG. **45** is an overview of a mobile terminal having a dual transparent display according to an embodiment of the present invention, which shows a method for controlling displays according to an overlapped state between the displays. Here, examples will be shown having a completely overlapped state (a), a partially overlapped state (b and c) and a completely separated state (d) between the LCD **151** and the TOLED **154**.

Complete Overlapped State between the LCD and TOLED

FIGS. **46**A to **46**C are overviews illustrating a method for controlling a touching operation in the completely overlapped state between each display shown in FIG. **45**(*a*). Hereinafter, a touching operation sensed in the state that the TOLED **154** is completely overlapped on the LCD **151** will be described by being divided into a touch (or proximity-touch) operation, long touch operation, long touch-and-drag operation, and the like.

First, as shown in FIG. **46**A, upon selecting a photo album function by a user, the controller **180** displays an image list on the LCD **151**. Afterwards, when a touch (real touch) or proximity-touch is sensed from the exterior, the controller **180** selects an image corresponding to the corresponding touched point **341**. Further, the controller **180** carries the selected image from the LCD **151** onto the TOLED **154** so as to display the selected image on the TOLED **154**.

The mobile terminal according to an embodiment of the present invention may have various sensors for performing different sensing functions, and may further have a proximity sensor or tactile sensor provided in the sensing unit **140** for sensing the proximity-touch. As shown in FIG. **46**B, if the external touch sensed is a long touch (e.g., a touch lasted for at least two or three seconds), the controller **180** runs or executes the selected image and displays it on the TOLED **154**. The long touch may also be used when selectively moving a desired object among objects displayed on the LCD **151** to the TOLED **154**. In addition, when the TOLED **154** is displaying many unnecessary objects, a certain touch input may be made to move objects from the TOLED **154** to the LCD **151** for display.

If a dragging operation or action is also sensed together with the long touch from the exterior, the controller **180** may display a preview screen for an image selected by the long touch on the TOLED **154** as shown in FIG. **46**C. Afterwards, a selection cursor (or selection bar) **342** of the LCD **151** is moved by the dragging action, and a selected image by the selection cursor **342** is then displayed on the preview screen. After the external touch is not sensed any more, an initial image selected by the long touch action is displayed. The touching operation (i.e., long touch+drag) of FIG. **46**C may equally be applied to the case of sensing a sliding (e.g., an operation of proximity-touch corresponding to the dragging) together with a long proximity touch (e.g., proximity touch lasted for at least two or three seconds) from the exterior. Also, upon sensing any touching operation other than the above-mentioned ones, the controller **180** can operate as done in a general method of controlling a touching operation.

In addition, the method for controlling the touching operation in the completely overlapped state may be applied to all types of mobile terminals having the single display (e.g., folder-type, flip-type, slide-type, rotating-type (e.g., swivel-type or swing-type), bar-type, watch-type and the like all having the single display).

Partially Overlapped State between the LCD and TOLED

FIGS. **47**A and **47**B are overviews illustrating a method for controlling a touching operation in a partially overlapped state between each display. Hereinafter, a touching operation sensed in the partially overlapped state will be described by dividing the operation into a touch (or proximity-touch) operation, long touch operation, long touch-and-drag operation, and touch-and-drag operation.

FIG. **47**A is an overview illustrating a pop-up selection window region of the TOLED **154**. As shown in FIG. **47**A, the controller **180** senses an external touch (real touch) or external proximity-touch. Upon sensing the touch, the controller **180** detects a touched point. That is, the controller **180** detects whether a pop-up selection window region has been touched or another region excluding the pop-up selection window has been touched, and thereafter performs a different processing according to the detected touched point.

For example, when a touch is sensed on the pop-up selection window region, the controller **180** may select a certain object (e.g., menu list, execution icon, or the like) and perform the function of the selected object. If the touch is sensed

from the other region excluding the pop-up selection window, then the controller **180** may take no action or close or cancel the pop-up selection window.

FIG. **47**B shows an overlapped region **347** and a non-overlapped region **348**. As shown in FIG. **47**B, if a long touch is sensed from the exterior, the controller **180** may perform a different processing depending on whether the touch is sensed on the non-overlapped region **348** or on the overlapped region **347**. For example, when a touch is sensed on the non-overlapped region **348**, the controller **180** may select a certain object (e.g., menu list, execution icon, or the like) and perform the function of the selected object. If a touch is sensed on the overlapped region **347**, the controller **180** may apply the same method of controlling the touching operation as applied in the completely overlapped state.

Also, if a sliding of a proximity-touch is sensed together with the long proximity-touch from the exterior, the processing may be the same as that for the touching operation (i.e., long touch & drag). In addition, when a dragging is sensed together with a real touch from the exterior, the controller **180** may equally apply a method for controlling a touching operation in a separated state between the LCD **151** and the TOLED **154** which will be explained later. Even when a proximity-touch and a sliding of proximity-touch are sensed from the exterior, the controller **180** may equally apply the method for controlling the touching operation in the separated state between the LCD **151** and the TOLED **154**.

As mentioned above, the method for controlling the touching operation in the partially overlapped state between the LCD **151** and the TOLED **154** can be applied to mobile terminals having a dual display (e.g., an open state of a slide-type mobile terminal, an open state of a rotating-type (e.g., swivel or swing type) mobile terminal and the like).

Completely Separated State between the LCD and TOLED

Hereinafter, a description will be given of a touching operation sensed in the completely separated state between the LCD **151** and TOLED **154** by being divided into a touch (or proximity-touch) operation, a long touch operation, a long touch-and-drag operation, and the like. Thus, when a real touch (or proximity-touch) or long touch is sensed from the exterior, the controller **180** may select a certain object (e.g., menu list or execution icon) located at the corresponding touched point of the TOLED **154** and perform the function of the selected object.

If a dragging action is sensed together with the real touch from the exterior, the controller **180** may select or move the touch-selected object (e.g., menu list or execution icon) and perform the function of the selected object. For example, the TOLED **154** is allowed to display copied contents (or contents in a clipboard), and such contents are attached onto the LCD **151** by the aforementioned operation (i.e., touch-and-drag action).

As another example, such operation (i.e., touch & drag) is performed to move the object displayed on the TOLED **154** onto the LCD **151**. As still another example, such operation (i.e., touch & drag) is performed to enlarge (or reduce) a webpage on the LCD **151**, to thusly be displayed on the TOLED **154**. Further, a scroll operation may also be available. Also, when a touching operation other than the above-mentioned operations is sensed, the controller **180** may operate the same as done in the general method of controlling a touching operation.

As mentioned above, the method for controlling the touching operation in the separated state between the LCD **151** and the TOLED **154** can be applied to mobile terminals having a dual display (e.g., an open state of a folder type mobile terminal, an open state of a flip type mobile terminal, an open state of a bar type mobile terminal, an open state of a watch type mobile terminal and the like).

Control Method Related to Setting of the LCD and TOLED

One embodiment of the present invention may be configured to generate a separate vibration feedback or sound feedback according to which one of the LCD **151** and TOLED **154** is manipulated. Thus, by differently setting the vibration feedback or sound feedback for the LCD **151** or TOLED **154**, it is possible to recognize which display (LCD **151** or TOLED **154**) a user has manipulated. For example, in the completely (or partially) overlapped state between the LCD **151** and the TOLED **154**, if a user's touch (e.g., a real touch or long touch) is sensed, the controller **180** controls the operation of the LCD **151** or TOLED **154** according to the type of touch input (or according to a user's purpose). Also, the controller **180** may generate different vibration or sound feedbacks when controlling the operation of the LCD **151** and the TOLED **154**.

Also, one embodiment of the present invention is configured such that a transmittance, color or brightness of the TOLED **154** can be set according to peripheral circumstances. In order to prevent information displayed on the TOLED **154** from being obscured due to a background reflected on the TOLED **154**, the color or brightness of the TOLED **154** can also be controlled according to the peripheral circumstances.

Furthermore, when providing a camera or solar cell at a rear surface of the TOLED **154**, in order to solve a problem that the operation of the camera or solar cell is affected by information displayed on the TOLED **154** or transmittance thereof, the transmittance can selectively be controlled with respect to a certain region of the TOLED **154**. In addition, the vibration (or sound) feedback related to the TOLED **154** and the control of the transparency, color or brightness of the TOLED **154** according to the peripheral circumstances may automatically be performed by the controller **180** based upon a preset algorithm, or directly be set by a user through an environment setup option.

Concepts of Main/Sub window of the LCD and TOLED

As discussed above, the present invention can operate displays such that the LCD **151** and the TOLED **154** can operate as a main window (or first window) and a sub window (or second window). For better understanding of a displaying method employing such concepts of the main/sub windows, an Internet browsing method will be described as one example. Further, the main and sub windows may be applied to a mobile terminal having a dual display (e.g., folder-type, slide-type, rotating-type (e.g., swivel-type, swing-type), watch-type or the like).

FIG. **48** is an overview of a web browsing method for showing a method of operating main and sub windows in a mobile terminal according to an embodiment of the present invention. As shown in FIG. **48**, a webpage (e.g., a main webpage) first opened when executing a web browser may be displayed on a main window (e.g., the TOLED **154**), and a webpage or pop-up page linked to the first-opened webpage may be displayed on a sub window (e.g., the LCD **151**).

Such web pages displayed on the main or sub windows may be displayed in an opposite window according to the environment setup option. Alternatively, when using any one of two displays provided in the mobile terminal, a webpage displayed on a display (e.g., sub window) disposed at a lower side of the mobile terminal may be moved to a display (e.g., main window) disposed at an upper side of the mobile terminal, thereby being displayed on the moved display. For example, upon closing the mobile terminal, a webpage displayed on a sub window may be moved to and displayed a main window.

FIGS. **49**A and **49**B are overviews illustrating a method for displaying a webpage according to a method of operating main and sub windows in a mobile terminal according to an embodiment of the present invention. As shown in FIG. **49**A, if a certain text (or certain object) on a webpage #**1** displayed on a main window (e.g., the TOLED **154**) is selected by a user's touch input (or proximity-touch), the controller **180** may display a webpage (e.g., webpage #**3**) linked to the text on a sub window (e.g., the LCD **151**).

In the state that the sub window (e.g., the LCD **151**) is displaying the webpage #**3**, as shown in FIG. **49**B, if a certain text (or object) on the webpage #**3** is selected, the controller **180** may display a webpage (e.g., webpage #**2**) linked to the selected text on the sub window (e.g., the LCD **151**), as well as the webpage #**3**. Further, the main and sub windows may be converted by a user's selection, and also contents displayed on each window may be converted.

In addition, if the user's input is a proximity-touch and touch is sensed on a certain content (e.g., text, English word, image, video, flash or the like) displayed on a main window (e.g., the TOLED **154**), the controller **180** may display information related to the corresponding content on a sub window (e.g., the LCD **151**). Also, if the proximity distance sensed becomes farther away, the sub window can return to its initial state.

Display Control according to an Open/Closing Operation of the Mobile Terminal

An open/closing operation of a mobile terminal denotes an opening or closing of the mobile terminal, namely, an operation of folding, sliding or rotating (swiveling or swinging) one body of a mobile terminal having at least two bodies, such as folder-type mobile terminal, flip-type mobile terminal, slide-type mobile terminal, rotating-type (swivel or swing-type) mobile terminal, watch-type mobile terminal or the like.

FIGS. **50**A and **50**B are overviews illustrating a method for moving a displayed object in cooperation with an opening/closing operation of a mobile terminal having a dual transparent display according to an embodiment of the present invention. Upon closing a mobile terminal having the LCD **151** and TOLED **154**, information (or objects) displayed on each of the displays are overlapped with each other. Such overlapped information is then displayed on any one of the two displays. Hereinafter, a display having the overlapped information displayed thereon is referred to as 'main display'.

When the mobile terminal is open, the controller **180** moves and displays a part of object displayed on the main display (e.g., the LCD **151**) onto a sub display (e.g., the TOLED **154**). As such, an object which is moved to each display for display in cooperation with the opening/closing of the mobile terminal is referred to as 'moving object'. The moving object may include an indicator, clock and calendar, as shown in FIG. **50**B(a), and further include background memo, multitasking menu, input window and the like.

As shown in FIG. **62**B(b), when being displayed on a sub display, an object such as a virtual input unit or device (e.g., keypad or wheel) may be overlapped with other objects on a main display, causing inconvenience of input. Thus, such object is preferably displayed on the main display. That is, the input window is small in size and difficult to be recognized at a glance, and thus it is displayed on the sub display in greater size. The positions of the virtual input device and the input window may be changed to each other for display.

Next, FIGS. **51**A and **51**B are overviews illustrating a method for generating a displayed object in cooperation with an opening/closing of a mobile terminal having a dual transparent display according to an embodiment of the present invention. As shown in FIG. **51**A, upon opening the mobile terminal, an object may be newly generated on a sub display (e.g., the TOLED **154**). Such object is referred to as a new object. The new object is not displayed, for example, due to the lack of displaying space when two displays are overlapped with each other.

Then, when the two displays are separated after the mobile terminal is opened, the new object may further be displayed on a sub display (e.g., the TOLED **154**). For example, as shown in FIG. **51**B, such new objects may include detailed information (additional information) related to specific information, a sub menu for a specific list or multimedia player.

Change in Information Displaying Direction on Screen of Mobile Terminal

A mobile terminal having a transparent display according to an embodiment of the present invention may be configured such that information displayed on a display can be reversed (or rotated) suitable for a user's eye in cooperation with an opening/closing of the mobile terminal (or rotating operation thereof) so as to be displayed. FIGS. **52** to **55** are overviews illustrating a method for changing an information displaying direction in a mobile terminal having a transparent display according to an embodiment of the present invention, which respectively show a folder-type mobile terminal, flip-type mobile terminal, rotating-type (swivel-type or swing-type) mobile terminal and bar-type mobile terminal.

Each type of mobile terminal is configured such that information displayed on a display can be rotated or reversed suitable for a position (pose, posture) of the mobile terminal according to the same method. For example, the controller **180** senses when the folding portion **410** or flip portion **510** starts to be opened. When the folding portion **410** is opened by more than a certain angle, the controller **180** rotates or reverses information displayed on the folding portion **410**. The certain angle may be set differently depending on manufacturers or designs of mobile terminals or based on user input.

If the mobile terminal is provided with a tilt sensor (or gyro sensor), a displaying direction of information displayed on any of two displays is changed according to the posture of the mobile terminal detected by the tilt sensor. For example, if the posture of the mobile terminal which was a vertical direction is changed into a horizontal direction, the information displaying direction of the mobile terminal can be changed from the vertical direction into the horizontal direction. Also, the mobile terminal according to the present invention may be provided with a separate software key (or hardware key) for allowing a user to selectively change the information displaying direction.

Automatic Execution of Specific Function Based Upon Opening/Closing of the Mobile Terminal

When a mobile terminal in which a locking function has been set to protect private information or prevent others from using the terminal, the controller **180** automatically displays a pop-up window to allow an input of a password, and releases the locked state of the mobile terminal when an accurate password is input. When the locking function is not yet released, if the mobile terminal is closed again, the controller **180** closes the pop-up window to obtain the password. Further, when the locking function has been set in order to simply prevent an unintended touch input or to protect a screen, when the mobile terminal is opened, the controller **180** may automatically release the locked state without requiring a password input, and automatically reset such locking function when the mobile terminal is closed.

Next, FIG. **56** is an overview illustrating operations related to the movement of a displayed object executed in cooperation with the opening/closing of a mobile terminal having a

dual transparent display according to an embodiment of the present invention, and more particularly, illustrating a function of automatically reflecting an image edited on the TOLED **154** onto an image displayed on the LCD **151**.

As shown in FIG. **56**(*a*), it is assumed that a folder-type mobile terminal is in a closed state and an image editor is being executed on the TOLED **154**. Further, a user may refer to an image displayed on the LCD **151** which is transmitted through the TOLED **154**, and draw or edit a specific image (e.g., cap or hat image) related to the image (e.g., snowman image) displayed on the LCD **151** through the image editor. Also, while the user draws or edits the image, such drawing operation may not directly affect the image displayed on the LCD **151**.

During the drawing operation, if it is sensed the folding portion **410** is open, the controller **180** can apply the drawn image on the TOLED **154** onto the image displayed on the LCD **151**. For example, the cap or hat image is displayed (attached) onto the head of the snowman image displayed on the LCD **151**. When the folding portion **410** is closed, the controller **180** can move the image back to the TOLED **154** (i.e., release the image). As such, the user can repeat the application and release an image during the drawing operation by opening or closing the folding portion **410**. The user can also determine if the drawn image is correctly disposed over the image on the LCD **151** and drawn as desired. The controller **180** may also keep the drawn image on the LCD **151** based on a preset condition, user input, tactile input, etc. That is, once the user is satisfied with the drawn image, the user can input a preset condition to instruct the controller **180** to maintain the drawn image on the LCD **151**.

In addition to the above-mentioned functions, a mobile terminal according to embodiments of the present invention can output information associated with dually executed functions through a dual display (e.g., the TOLED **154** and the LCD **151**). For example, the mobile terminal may output both navigation and a digital multimedia broadcast, perform both navigation and web browser functions, perform a dual electronic book (e-BOOK) function, display an original picture during picture edition, automatically display a list of devices for transmission, display a dual webpage, and the like.

Display Controlling Method for Saving Power

A mobile terminal according to an embodiment of the present invention may also control the TOLED **154** according to external environments, such as a peripheral illumination, peripheral color, time slot and the like. In more detail, the mobile terminal may adjust a background transparency of the TOLED **154** according to the peripheral illumination sensed by an illumination sensor. For example, when the peripheral illumination increases, the mobile terminal decreases the background transparency of the TOLED **154**, whereas increasing the background transparency when the peripheral illumination decreases.

In addition, the mobile terminal my sense the peripheral color by a color sensor and an image sensor. Accordingly, if a color which is equal to the sensed peripheral color exists in an information object displayed on the TOLED **154**, the mobile terminal may adjust a brightness and saturation of the corresponding color. The mobile terminal may also adjust the background transparency of the TOLED **154** according to time slots. For example, the mobile terminal may decrease the background transparency of the TOLED **154** in a daytime slot having a higher peripheral illumination, while increasing it in a nighttime slot having a lower peripheral illumination.

3. Embodiments for Method of Controlling a Mobile Terminal according to the Present Invention

In the following description, embodiments for a controlling method implemented in the above-configured mobile terminal are explained with reference to the accompanying drawings. It is understood that the following embodiments are available independently or by being combined with each other. And, it is also understood that the following embodiments are available by being combined with the aforesaid user interface (UI) operations.

In the following embodiments, a display screen of the display module **151** will be indicated by a reference number **600**.

First Embodiment

First of all, a method of controlling a mobile terminal according to a first embodiment of the present invention is explained with reference to FIGS. **57** to **60** as follows.

FIG. **57** is a flowchart for a method of controlling a mobile terminal according to a first embodiment of the present invention, and FIGS. **58** to **60** are diagrams of display screen configurations for implementing a mobile terminal according to a first embodiment of the present invention.

Referring to (**58-1**) of FIG. **58**, the mobile terminal **100** is in a standby mode [S**571**]. The first and second bodies **200** and **205** of the mobile terminal **110** are closed to each other. And, at least one menu icons **601** in standby mode (hereinafter, "standby menu icons") are being displayed on the display screen **600** of the mobile terminal **100**.

Subsequently, when the mobile terminal **100** is in the standby mode, the camera **121** becomes activated [S**572**]. The camera **121** can be activated in various ways. For instance, referring to (**58-2**) of FIG. **58**, if the first and second bodies **200** and **205** are mutually open, the camera **121** can be activated. Alternatively, although the first and second bodies **200** and **205** are not mutually open, the camera can be activated if a specific manipulation (e.g., pushing a side key) of the user input unit **130** is performed.

If so, the activated camera **121** generates a preview image for taking pictures (still picture and/or moving picture). The controller **180** controls the generated preview image to be displayed on the display screen **600** and controls at least one of the standby mode menu icons **601** to be displayed on the preview image [S**573**]. In this case, the icons **601** may be non-transparent.

Subsequently, the shutter key (e.g., side key) for taking pictures is half pressed (or half shutter). If so, as shown in (**58-3**) of FIG. **58**, the standby mode menu icons **601** on the preview image are displayed semi-transparently. In (**58-3**) of FIG. **58**, exemplarily shown is that the standby mode menu icons **601** are displayed semi-transparent. By way of non-limiting the example, the icons **601** can be configured fully transparent.

If the icons **601** are semi-transparent before the shutter key is half pressed, the icons **601** can be configured to become further semi-transparent or fully transparent after the shutter key has been half pressed.

As the shutter key is half pressed (half shutter), when the icons **601** turn semi-transparent or fully transparent, they can be configured to become semi-transparent or fully transparent gradually (i.e., by fade-out) or instantaneously.

If the shutter key is half pressed, it is able to configure at least one of an auto-focus function and an auto-exposure function to be executed. If the shutter key is full pressed (full shutter), the preview image is captured.

Meanwhile, in (**58-2**) of FIG. **58**, after the camera **121** has been activated, if the shutter key is not operated for a prescribed period of time, the camera **121** becomes deactivated and the preview image can be configured to disappear from the display screen **600**.

Although not shown in the drawing, when the icons **601** becomes semi-transparent or full transparent, various indicators **602** on the display screen **600** can be configured to become semi-transparent or full transparent together with the icons **601**.

In case that the display module **151** is configured to include a touch screen, the above embodiment can be modified into more various types. This will be explained with reference to FIG. **59** and FIG. **60**. In the following description, a display screen of the touch screen **151** will be indicated by a reference number **600**. In the following drawings, the body of the mobile terminal is omitted but the display screen is depicted only if necessary.

Referring to (**59-1**) of FIG. **59**, the touch screen **600** can be divided into two areas, i.e., a first area **600**A and a second area **600**B. Optionally, the mobile terminal **100** includes two display units to be responsible for the first and second areas **600**A and **00**B, respectively.

In the first area **600**A, the image of the touch screen **600** shown in (**58-1**) of FIG. **58** can be configured as it is. In the second area **600**B, the user input unit **215** of the first body **200** shown in (**58-1**) of FIG. **58** can be implemented as a touch icon type or other type of user input. Therefore, in case that the touch screen **600** is configured as shown in FIG. **59**, it is able to configure that the user input unit **215** of the first body is omitted. In FIG. **59**, exemplarily shown is that a navigation key of the user input unit **215** of the first body **200** is configured in the second area **600**B only.

An area adjust icon **616** can be provided to the touch screen **600** to make the second area **600**B disappear from the touch screen **600** and to have the first area **600**A occupy a whole area of the touch screen **600**. In (**59-1**) of FIG. **59**, the area adjust icon **616** is provided to the second area **600**B. Yet, the area adjust icon **616** can be provided to the first area **600**A.

The area adjust icon **616** is touched.

If so, referring to (**59-2**) of FIG. **59**, the second area **600**B disappears from the touch screen **600** and the first area **600**A occupies the whole area of the touch screen **600**.

Subsequently, when the mobile terminal **100** is in a standby mode, the camera **121** becomes activated. As mentioned in the foregoing description, when the first and second bodies **200** and **205** are mutually open, the camera **121** can be activated for example.

If so, referring to (**59-3**) of FIG. **59**, a preview image of the camera **121** is displayed on the touch screen **600** and at least one of the standby mode menu icons is displayed by being overlapped with the preview image.

The area adjust icon **616** is touched.

If so, referring to (**59-4**) of FIG. **59**, the touch screen **600** is divided into the first area **600**A and the second area **600**B. The preview image of the camera is displayed on the first area **600**A and the navigation key **615** is displayed on the second area **600**B.

Meanwhile, it is not necessary for the camera to be activated only if the second area **600**B does not exist on the touch screen. This will be explained with reference to FIG. **60** as follows.

Referring to (**60-1**) of FIG. **60**, the touch screen **600** is divided into two areas, i.e., into a first area **600**A and a second area **600**B. Details of the first and second areas **600**A and **600**B described with reference to FIG. **59** will be cited for clarity and convenience of this disclosure.

Subsequently, when the mobile terminal **100** is in a standby mode, the camera **121** becomes activated. As mentioned in the foregoing description, the camera **121** can be activated when the first and second bodies **200** and **205** enter a mutually open state.

If so, referring to (**60-2**) of FIG. **60**, the preview image of the camera **121** is displayed on the first area **600**A and at least one of the standby mode menu icons is displayed by being overlapped with the preview image.

The area adjust icon **616** is touched.

If so, referring to (**60-2**) of FIG. **60**, the second area **600** disappears from the touch screen **600** and the first area **600**A occupies a whole area of the touch screen **600**.

The process for taking pictures in displaying the preview image of the camera is already explained with reference to FIG. **58**. Therefore, details with reference to FIG. **59** and FIG. **60** are omitted for clarity and convenience of the description of this disclosure.

Second Embodiment

The above-described first embodiment is relatively and suitably applicable to such a mobile terminal including two bodies as a slide type terminal, a folder type terminal, a swing type terminal and the like. Further, the present invention is applicable to such a mobile terminal including a single body only as a bar type mobile terminal. Second embodiment of the present invention relates to an example suitable for the bar type terminal. Yet, it is understood that the second embodiment of the present invention is applicable to all kinds of mobile terminals as well as the bar type mobile terminal.

A method of controlling a mobile terminal according to a second embodiment of the present invention is explained with reference to FIG. **61** and FIG. **62** as follows. In the second embodiment of the present invention, it is not mandatory for the display module **151** to include the touch screen.

FIG. **61** is a flowchart for a method of controlling a mobile terminal according to a second embodiment of the present invention, and FIG. **62** is a diagram of display screen configuration for implementing a mobile terminal according to a second embodiment of the present invention.

Referring to (**62-1**) of FIG. **62**, the mobile terminal is in a standby mode and a plurality of standby mode menu icons **601** are displayed on the display screen **600** [S**611**].

The shutter key is half pressed (half shutter). If so, the camera becomes activated [S**612**].

Referring to (**62-2**) of FIG. **62**, a preview image of the camera is displayed on the display screen **600** and at least one of the standby mode menu icons **601** is displayed by being overlapped with the preview image.

After the shutter key has been half pressed, a prescribed period of time expires.

Referring to (**62-3**) of FIG. **62**, as the standby mode menu icons **601** turns to be semi-transparent or full transparent, an auto-focus function is executed [S**613**].

If the shutter key is full pressed, the preview image of the camera is captured.

Generally, the shutter key is operable by two steps including a half shutter and a full shutter. If the shutter key is enhanced to be operable by three steps, the second embodiment of the present invention can be implemented more conveniently. This is explained in detail with reference to FIG. **63**A and FIG. **63**B as follows.

FIG. **63**A and FIG. **63**B are diagrams of a shutter key usable for a mobile terminal according to the present invention.

Referring to (**63A-1**) of FIG. **63**A, the shutter key is not manipulated yet.

Referring to (**63A-2**) of FIG. **63**A, the shutter key is pressed into a first depth. If so, the preview image of the camera in the aforesaid embodiment is displayed on the display screen **600** and at least one of the standby mode menu icons is displayed by being overlapped with the preview image.

Referring to (**63**A-**3**) of FIG. **63**A, the shutter key is pressed into a second depth. If so, the standby mode menu icons turn to be semi-transparent or full transparent and an auto-focus function is executed. Namely, the operation of pressing the shutter key into the second depth corresponds to the half shutter of the first embodiment of the present invention.

Referring to (**63**A-**4**) of FIG. **63**A, the shutter key is pressed into a third depth. If so, the preview image is captured. Namely, the operation of pressing the shutter key into the third depth corresponds to the full shutter of the first embodiment of the present invention.

In FIG. **63**A, the 3-step shutter is implemented according to the shutter depths. Yet, it is unnecessary for the 3-step shutter to be implemented according to the shutter depth only. This is explained with reference to FIG. **63**B as follows.

Referring to (**63**B-**1**) of FIG. **63**B, the shutter key is not manipulated yet. Unlike the shutter key shown in FIG. **63**A, the shutter key of FIG. **63**B can be configured to include a touch sensor provided to its surface.

Referring to (**63**B-**2**) of FIG. **63**B, the shutter key is simply touched instead of being pressed. As the corresponding touch is recognized, the preview image of the camera in the foresaid embodiment is displayed on the display screen **600** and one of the standby mode menu icons is displayed by being overlapped with the preview image.

Referring to (**63**B-**3**) of FIG. **63**B, the shutter key is pressed into a first depth. If so, the standby mode menu icons turn to be semi-transparent or fully transparent and an auto-focus function is executed. Namely, the operation of pressing the shutter key into the first depth corresponds to the half shutter of the first embodiment of the present invention.

Referring to (**63**B-**4**) of FIG. **63**B, the shutter key is pressed into a second depth. If so, the preview image is captured. Namely, the operation of pressing the shutter key into the second depth corresponds to the full shutter of the first embodiment of the present invention.

Third Embodiment

If the display module includes a transparent display module, the present invention can be implemented for user's enhanced convenience. This is explained as a third embodiment of the present invention.

In the following description, a method of controlling a mobile terminal according to a third embodiment of the present invention is explained with reference to FIG. **64** and FIG. **65**. In the third embodiment, assume that the display module **151** includes a touch screen. Yet, according to the second embodiment of the present invention, it is not mandatory for the display module **151** to include the touch screen.

FIG. **64** is a flowchart for a method of controlling a mobile terminal according to a third embodiment of the present invention, and FIG. **65** is a diagram of display screen configuration for implementing a mobile terminal according to a third embodiment of the present invention.

Referring to (**65-1**) of FIG. **65**, the mobile terminal **100** is in a standby mode. And, the first and second bodies **200** and **205** of the mobile terminal **100** are mutually closed.

The touch screen **600** is divided into a first area **600**A and a second area **600**B. An image of the standby mode (i.e., standby image) is displayed on the first area **600**A and a navigation key **615** is displayed on the second area **600**B, for example. And, at least one or more standby mode menu icons **601** are displayed on the first area **600**A.

Both of the first and second areas **600**A and **600**B can include a single transparent display module.

Alternatively, each of the first and second areas **600**A and **600**B can include an independent display module. In this case, the first area **600**A can include a single transparent display module. And, the second area **600**B can include a single transparent or non-transparent (normal) display module.

Referring to (**65-2**) of FIG. **65**, the first and second bodies **200** and **205** become open mutually [S**641**]. In this case, both opposite sides (i.e., front side and backside) of the first area **600**A of the touch screen can be arranged to be externally exposed. Hence, a background scene of the mobile terminal can be seen through the first area **600**A. In the following description, for clarity and convenience of the following description, an image seen through the first area **600**A will be named 'see through image'. And, at least one of the standby mode menu icons keeps being displayed by being overlapped with the see through image.

The second area **600**B of the touch screen can be arranged to have only one face exposed externally even if the first and second bodies **200** and **205** become open mutually.

As mentioned in the foregoing description with reference to FIG. **3**, the camera is provided to a backside of the mobile terminal **100**. Position and photographic angle of the camera can be set up in a manner that a range of the see through image, which is viewed via the mobile terminal held in front conveniently by a user to take pictures, matches a range of a camera preview image actually captured by the camera. If so, the see through image can play a role as the camera preview image [S**642**].

In this case, after the first and second bodies **200** and **205** have been mutually opened, even if the camera is activated, the camera preview image captured by the camera needs not to be displayed on the touch screen. Therefore, power consumption can be saved correspondingly.

Referring to (**65-3**) of FIG. **65**, if the shutter key is half pressed (half shutter), the standby mode menu icons turn semi-transparent or full transparent. And, the camera performs an auto-focus function for the preview image by the see through image. If the shutter key is full pressed (full shutter), the preview image by the see through image is captured or taken.

Fourth Embodiment

In the above-explained third embodiment of the present invention, it is possible that it could be difficult for the range of the see through image to match that of the camera preview image. This is because each terminal user tends to conveniently hold the mobile terminal in different posture to take a picture in front. A solution for solving that problem is described in the following description as a fourth embodiment of the present invention.

A method of controlling a mobile terminal according to a fourth embodiment of the present invention is explained with reference to FIG. **66** and FIG. **67**. In the fourth embodiment, assume that the display module **151** includes a touch screen.

FIG. **66** is a flowchart for a method of controlling a mobile terminal according to a fourth embodiment of the present invention, and FIG. **67** is a diagram of display screen configuration for implementing a mobile terminal according to a fourth embodiment of the present invention.

First of all, the mobile terminal **100** enters a preview image range setting menu through menu manipulation [S**661**]. The process for entering a specific menu through menu manipulation in a mobile terminal is generally apparent to those skilled in the art without separate explanation. For clarity and convenience of this disclosure, details for the specific menu entering process will be omitted in the following description.

Referring to (**67-1**) of FIG. **67**, a camera preview image **617** taken by the camera is displayed on a second area **600**B. And,

a plurality of preview image indicators **619-1** to **619-4** on a see-through image are displayed on a first area **600**A [S**662**].

FIG. **67** exemplarily shows that four preview image indicators responsible for four corner of a preview image are displayed. By non-limiting examples of the present embodiment, two preview image indicators responsible for left top and right bottom corners (or right top and left bottom corners) among four corners of a preview image can be configured to be displayed. Besides, it is able to configure that a rectangular indicator corresponding to the preview image is displayed.

Referring to (**67-2**) of FIG. **67**, the preview image indicators **619-1** to **619-4** can be arranged around the see-through image in the range corresponding to the camera view image **617** while a terminal user refers to the camera view image **617** of the second area **600**B [S**663**]. In this case, the preview image indicators **619-1** to **619-4** can be provided to a prescribed position by touch-and-drag for example. If a save icon **618** in the second area **600**B is selected, the position of the preview image indicators **619-1** to **619-4** is saved. Hence, the setting is completed.

After completion of the setting, referring to (**67-3**) of FIG. **67**, if the first and second bodies become mutually open, the preview image indicators **619-1** to **619-4** are displayed on the see-through image on the first area **600**A. It is able to configure the preview image indicators **619-1** to **619-4** to keep being displayed even if the shutter is half pressed (half shutter). Therefore, the terminal user is facilitated to understand the range of a preview image, which will be taken via the camera, on the see-through image.

In the above description, although the preview image indicator is displayed rectangular, it is apparent to those skilled in the art that a range of the preview image indicator can be adjusted by touching and dragging each vertex or side.

Meanwhile, in the course of the preview image range setting, it s not mandatory for the camera preview image **617** to be displayed on the second area **600**B. For instance, when the camera view image **617** and the see-through image are alternately displayed on the first area **600**B, it is able to configure a position of the preview image indicator to be determined by comparing the camera preview image and the see-through image to each other.

Fifth Embodiment

Although the range of the preview image is displayed on the see-through image like the fourth embodiment of the present invention, if a terminal user changes a viewing angle aiming at a first area, the camera preview image may not match a preview image on the see-through image marked by a preview image indicator on the see-through image. In particular, a method of enabling the terminal user's viewing angle to be fixed in aiming at the first area is necessary. This method is described as a fifth embodiment of the present invention.

A method of controlling a mobile terminal according to a fifth embodiment of the present invention is explained with reference to FIG. **68** and FIG. **69** as follows.

FIG. **68** is a flowchart for a method of controlling a mobile terminal according to a fifth embodiment of the present invention, and FIG. **69** is a diagram of display screen configuration for implementing a mobile terminal according to a fifth embodiment of the present invention.

Referring to (**69-1**) of FIG. **69**, first and second eyes-fixing indicators **620-1** and **620-2** are formed on both faces of the transparent display corresponding to a first area **600**A [S**681**]. The first eyes-fixing indicator **620-1** is provided to a front side of the transparent display and the second eyes-fixing indicator **620-2** is provided to a backside of the transparent display.

The first and second eyes-fixing indicators **620-1** and **620-2** can be physically formed on both faces of the transparent display. Alternatively, one of the first and second eyes-fixing indicators **620-1** and **620-2** is physically formed on one of both faces and the other is formed as a graphic on the other face.

In (**69-1**) of FIG. **69**, the first eyes-fixing indicator **620-1** lies below the second eyes-fixing indicator **620-2**. This indicates that the display screen **600** (specifically, first area **600**A) is positioned below the front eyes of terminal user.

If so, the terminal user adjusts the display screen **600** to be aligned with the front eyes of the terminal user in a manner of lifting a position of the mobile terminal **100** upward.

In (**69-2**) of FIG. **69**, the first eyes-fixing indicator **620-1** lies above the second eyes-fixing indicator **620-2**. This indicates that the display screen **600** (specifically, first area **600**A) is positioned above the front eyes of terminal user.

If so, the terminal user adjusts the display screen **600** to be aligned with the front eyes of the terminal user in a manner of lowering a position of the mobile terminal **100** downward.

In (**69-3**) of FIG. **69**, the first eyes-fixing indicator **620-1** coincides with the second eyes-fixing indicator **620-2**. This indicates that the display screen **600** (specifically, first area **600**A) is aligned with the front eyes of terminal user.

Thus, the terminal user is able to adjust the position of the mobile terminal to fix the viewing angle aiming at the first area [S**682**].

Sixth Embodiment

The former embodiment of the present invention relates to the method of replacing the camera preview image by the see-through image of the first area. Yet, if necessary, the camera preview image needs to be displayed on the first area as it is. This is explained as a sixth embodiment of the present invention.

A method of controlling a mobile terminal according to a sixth embodiment of the present invention is explained with reference to FIG. **70** and FIG. **71** as follows.

FIG. **70** and FIG. **71** are diagrams of display screen configurations for implementing a mobile terminal according to a sixth embodiment of the present invention.

Referring to (**70-1**) of FIG. **70**, a see-through image is displayed on the first area **600**A of the display screen **600**, and the navigation key **615** and the area adjust icon **616** are displayed on the second area **600**B of the display screen **600**.

The area adjust icon **616** is selected.

If so, referring to (**70-2**) of FIG. **70**, the first area **600**A occupies the display screen **600** entirely as soon as the second area **600**B disappears. And, a camera preview image captured by the camera is displayed all over the display screen **600**.

Therefore, a terminal user is facilitated to view a preview image with a bigger screen.

In particular, when the terminal user views the preview image on the whole display screen **600**, the camera preview image needs to be displayed on the display screen **600** as well.

Meanwhile, when the camera is zoomed in or out, the preview image of the see-through image fails to match the camera preview image. This is explained with reference to FIG. **71** as follows.

Referring to (**71-1**) of FIG. **71**, a see-through image is displayed on the first area **600**A of the display screen **600** and the navigation key **615** and the area adjust icon **616** are displayed on the second area **600**B of the display screen **600**.

In this case, the zoom adjustment of the camera is performed. Command for the zoom adjustment can be given in various ways. In (**71-1**) of FIG. **71**, exemplarily shown is that the zoom adjustment is enabled using the navigation key **615**.

If so, referring to (**71-2**) of FIG. **71**, the camera preview image is displayed on the first area **600**A.

Accordingly, the present invention provides the following effects or advantages.

First of all, the present invention enables a picture to be taken more quickly even if a mobile terminal is in a standby mode.

Secondly, a see-through image seen through a transparent display can become a preview image of photography. Therefore, although a preview image obtained by a camera needs not to be displayed on a display unit, whereby corresponding power consumption can be saved.

It will be apparent to those skilled in the art that the present invention can be specified into other forms without departing from the spirit or scope of the inventions.

For instance, it is understood that a touch-and-drag action can be replaced by a flick action.

In addition, the above-described methods can be implemented in a program recorded medium as computer-readable codes. The computer-readable media include all kinds of recording devices in which data readable by a computer system are stored. The computer-readable media include ROM, RAM, CD-ROM, magnetic tapes, floppy discs, optical data storage devices, and the like for example. And, the computer can include the controller **180** of the terminal.

It will be apparent to those skilled in the art that various modifications and variations can be made in the present invention without departing from the spirit or scope of the inventions. Thus, it is intended that the present invention covers the modifications and variations of this invention provided they come within the scope of the appended claims and their equivalents.

What is claimed is:

1. A mobile terminal, comprising:

a camera;

a display;

a user input having a camera shutter input; and

a controller configured to when the mobile terminal is in a standby mode, display at least one icon,

when the camera becomes activated, keep displaying the at least one icon by overlapping the at least one icon with a preview image obtained from the camera, and

remove the at least one icon when the camera shutter input is half pressed, wherein the standby mode is a mode where the camera has not been activated, and

wherein the at least one icon is non-transparent or semi-transparent.

2. The terminal of claim **1**, wherein the at least one icon is non-transparent, and the controller is configured to remove the at least one icon by causing the at least one icon to become semi-transparent when the camera shutter input is half pressed.

3. The terminal of claim **1**, wherein the controller is configured to cause the at least one icon to fade-out or to disappear instantaneously.

4. The terminal of claim **1**, wherein the controller is further configured to execute an auto-focus function when the camera shutter input is half pressed.

5. The terminal of claim **1**, comprising;

a first body; and

a second body,

wherein the first and second bodies are configured to be opened and closed by sliding or swinging, and wherein the controller is configured to activate the camera when the first and second bodies shift to an open state from a closed state.

6. The terminal of claim **5**, wherein the controller is configured to display a preset standby image instead of the preview image when the camera shutter input is not manipulated for a predetermined period of time after the first and second bodies shift to the open state from the closed state.

7. The terminal of claim **1**, wherein the controller is configured to remove the at least one icon when a prescribed period of time expires after the camera shutter has been half pressed.

8. The terminal of claim **1**, wherein the camera shutter input is configured to be manipulated in accordance with three steps.

9. The terminal of claim **8**, wherein the control unit is further configured to perform at least one of the following functions overlap the at least one icons with the preview image when the camera shutter is manipulated as a first of the three steps, remove the at least one of the icon to and execute an auto-focus function when the camera shutter is manipulated as a second of the three steps, and cause a photographic function to be executed when the camera shutter is manipulated as a third of the three steps.

10. The terminal of claim **1**, wherein the controller is configured to:

display the at least one icon at a specific position on the display when the mobile terminal is in the standby mode;

when the camera becomes activated, keep displaying the at least one icon substantially at the same specific position on the display by overlapping the at least one icon with a preview image obtained from the camera.

11. The terminal of claim **1**, wherein the controller is configured to:

display the at least one icon and at least one indicator when the mobile terminal is in the standby mode;

when the camera becomes activated, keep displaying the at least one icon and the at least one indicator by overlapping the at least one icon and the at least one indicator with a preview image obtained from the camera.

12. The terminal of claim **1**, wherein the controller is further configured to:

simultaneously render the at least one icon to become semi-transparent or fully transparent and execute at least one of an auto-focus function and an auto-exposure function.

13. A method of controlling a mobile terminal having a camera, a user input having a camera shutter input, and a camera, the method comprising:

displaying at least one icon, when the mobile terminal is in a standby mode, and

keep displaying the at least one icon, when the camera is activated, by overlapping the at least one standby icon with a preview image obtained from the camera; and

removing the at least one icon when the camera shutter input is half pressed,

wherein the standby mode is a mode where the camera has not been activated, and

wherein the at least one icon is non-transparent or semi-transparent.

14. The method of claim **13**, wherein the at least one icon is non-transparent, and

wherein the step of removing the at least one icon comprises changing the at least one icon to become semi-transparent. when the camera shutter input is half pressed.

15. The method of claim **13**, the step of removing comprising one of:

fading out the at least one icon; and removing the at least one icon instantaneously.

16. The method of claim **13**, further comprising: executing an auto-focus function when the camera shutter input is half pressed.

17. The method of claim **13**, wherein the mobile terminal includes a first and second bodies configured to be opened and closed by sliding or swinging, the method further comprising:

activating the camera when the first and second bodies shift to an open state from a closed state.

18. The method of claim **17**, further comprising:

displaying a preset standby image instead of the preview image when the camera shutter input is not manipulated for a predetermined period of time after the first and second bodies shift to the open state from the closed state.

19. The method of claim **13**, the step of removing the at least one icon comprising:

removing the at least one icon when a prescribed period of time expires after the camera shutter has been half pressed.

20. The method of claim **13**, further comprising:

manipulating the camera shutter input in accordance with three steps.

21. The method of claim **20**, further comprising:

overlapping the at least one icons with the preview image when the camera shutter is manipulated as a first of the three steps,

removing the at least one of the icon to and execute an auto-focus function when the camera shutter is manipulated as a second of the three steps, and

executing a photographic function when the camera shutter is manipulated as a third of the three steps.

* * * * *