UNITED STATES PATENT AND TRADEMARK OFFICE

BEFORE THE PATENT TRIAL AND APPEAL BOARD

ZEPP HEALTH CORPORATION, Petitioner

v.

SLYDE ANALYTICS, LLC Patent Owner.

Case No. IPR2025-00062
U.S. Patent No. 9,804,678

DECLARATION OF DR. BENJAMIN B. BEDERSON IN SUPPORT OF PETITION FOR *INTER PARTES* REVIEW OF U.S. PATENT NO. 9,804,678

TABLE OF CONTENTS

Page

I. INTRODUCTION 1

II. BACKGROUND AND QUALIFICATIONS 1

III. INFORMATION CONSIDERED 15

IV. RELEVANT LEGAL STANDARDS 15

A. CLAIM INTERPRETATION 15

B. PERSPECTIVE OF ONE OF ORDINARY SKILL IN THE ART 16

C. OBVIOUSNESS 17

V. SUMMARY OF OPINIONS 20

VI. THE CHALLENGED PATENT 21

VII. PATENT PROSECUTION HISTORY 22

VIII. LEVEL OF ORDINARY SKILL IN THE ART 24

IX. TECHNOLOGY BACKGROUND 25

X. PRIORITY DATE 44

XI. CLAIM CONSTRUCTION 44

XII. BRIEF DESCRIPTION OF THE APPLIED PRIOR ART REFERENCES 47

A. U.S. PATENT NO. 7,606,552 ("ORR") (EX-1005) 47

B. U.S. APP. PUB. NO. 2010/0194682 ("ORR682") (EX-1006) 49

C. U.S. PATENT NO. 9,019,230 ("LI") (EX-1007) 50

D. U.S. APP. PUB. NO. 2009/0164219 ("YEUNG") (EX-1008) 50

E. U.S. PATENT NO. 8,914,075 ("PASQUERO") (EX-1009) 52

TABLE OF CONTENTS

Page

XIII. DETAILED EXPLANATION OF THE UNPATENTABILITY GROUNDS 54

A. GROUND 1: CLAIMS 1-5, 7, 10-12, AND 14 ARE OBVIOUS OVER ORR (EX-1005) IN VIEW OF ORR682 (EX-1006) 54

2. Independent Claim 14 ..... *64*

3. Independent Claim 1 ..... *101*

4. Dependent Claims 2-5, 7, and 10-12 ..... *104*

B. GROUND 2: CLAIMS 6, 8, 9, AND 15 ARE OBVIOUS OVER ORR IN VIEW OF ORR682 AND FURTHER IN VIEW OF LI (EX-1007) 116

1. ***A POSITA would have been motivated to combine the teachings of Orr-Orr682 and Li, and would have had a reasonable expectation of success in doing so*** *116*

2. Dependent Claims 6, 8, 9, and 15 ..... *119*

C. GROUND 3: CLAIMS 1-5, 7, 10-12, AND 14 ARE OBVIOUS OVER ORR IN VIEW OF ORR682 AND FURTHER IN VIEW OF PASQUERO. 124

1. A POSITA would have been motivated to combine the teachings of Orr-Orr682 and Pasquero, and would have had a reasonable expectation of success in doing so *124*

2. Claims 1-5, 7, 10-12, and 14 ..... *131*

D. GROUND 4: CLAIMS 6, 8, 9, AND 15 ARE OBVIOUS OVER ORR IN VIEW OF ORR682 AND PASQUERO AND FURTHER IN VIEW OF LI 133

1. A POSITA would have been motivated to combine the teachings of Orr-Orr682-Pasquero and Li, and would have had a reasonable expectation of success in doing so *133*

2. Claims 6, 8, 9, and 15 ..... *133*

TABLE OF CONTENTS

Page

E. GROUND 5: CLAIMS 12-13 ARE OBVIOUS OVER ORR IN VIEW OF ORR682 AND PASQUERO AND FURTHER IN VIEW OF YEUNG (EX-1009) 134

1. A POSITA would have been motivated to combine the teachings of Orr-Orr682-Pasquero and Yeung, and would have had a reasonable expectation of success in doing so *134*

2. Dependent Claims 12-13 .....*137*

F. GROUND 6: CLAIMS 1-5, 7, AND 10-14 ARE OBVIOUS OVER ORR IN VIEW OF ORR682 IN FURTHER VIEW OF YEUNG. 141

1. A POSITA would have been motivated to combine the teachings of Orr-Orr682 and Yeung, and would have had a reasonable expectation of success in doing so *141*

2. Claims 1-5, 7, and 10-14 .....*147*

XIV. CONCLUSION 150

LIST OF EXHIBITS[1]

Ex-1001	U.S. Patent No. 9,804,678 to Bezinge ("the '678 Patent")
Ex-1002	Declaration of Dr. Benjamin B. Bederson
Ex-1003	Curriculum Vitae of Dr. Benjamin B. Bederson
Ex-1004	Prosecution History of the '678 Patent (App. No. 14/352,727)
Ex-1005	U.S. Patent No. 7,606,552 ("Orr")
Ex-1006	U.S. Application Publication No. 2010/0194682 ("Orr682")
Ex-1007	U.S. Patent No. 9,019,230 ("Li")
Ex-1008	U.S. Application Publication No. 2009/0164219 ("Yeung")
Ex-1009	U.S. Patent No. 8,914,075 ("Pasquero")
Ex-1010	U.S. Patent No. 8,344,998 ("Fitzgerald")
Ex-1011	U.S. Application Publication No. 2011/0083100 ("Fyke")
Ex-1012	U.S. Application Publication No. 2008/0168368 ("Louch")
Ex-1013	International Publication No. WO 2006/120211 ("Tecchiolli")
Ex-1014	U.S. Application Publication No. 2005/0212911 ("Marvit911")
Ex-1015	U.S. Patent No. 7,301,528 ("Marvit528")
Ex-1016	U.S. Application Publication No. 2006/0097991 ("Hotelling")
Ex-1017	U.S. Application Publication No. 2010/0146463 ("Cho")
Ex-1018	U.S. Application Publication No. 2008/0248838 ("Chiang")

[1] Four-digit pin citations that begin with 0 are to the branded numbers added by in the bottom right corner of the exhibits. All other pin citations are to original page, column, paragraph, or line numbers.

Ex-1019	U.S. Application Publication No. 2007/0211042 ("Kim")
Ex-1020	Claim Mapping for the '678 Patent

Ex-1021	Josh Lowensohn, A brief history of smartwatches (pictures), CNET, https://www.cnet.com/pictures/a-brief-history-of-smartwatchespictures/ (last visited Oct. 28, 2023).
Ex-1022	LIS3L02DQ Data Sheet, STMicroelectronics.
Ex-1023	U.S. Application Publication No. 2005/0216867 ("Marvit867")
Ex-1024	U.S. Application Publication No. 2006/0236014 ("Yin")
Ex-1025	zCover Universal Armband (2007).
Ex-1026	INTENTIONALLY LEFT BLANK
Ex-1027	INTENTIONALLY LEFT BLANK
Ex-1028	INTENTIONALLY LEFT BLANK
Ex-1029	Weisstein, Eric W. "Subset." From MathWorld--A Wolfram Web Resource. https://mathworld.wolfram.com/Subset.html.
Ex-1030	Linux Watch, IBM, https://researcher.watson.ibm.com/researcher/view_group_subpage.php?id=6102 (last visited Sept. 29, 2023).
Ex-1031	Chandra Narayanaswami et al., IBM's Linux Watch: The Challenge of Miniaturization 33-41 (2002).
Ex-1032	Mercedes Casamayor and Claire Croke, How to Save Power in Battery Applications Using the Power-Down Mode in an ADC, Analog Dialogue (2003), https://www.analog.com/media/en/analogdialogue/volume-37/number-3/articles/save-power-with-powerdown-mode.pdf.

Ex-1033	Eija Kaasinen, User acceptance of mobile services: Value, ease of use, trust and ease of adoption, VTT Technical Research Centre of Finland (June 22, 2005).
Ex-1034	U.S. Patent No. 5,612,931 ("Sato")
Ex-1035	Certified Translation of Japanese Patent Application Publication No. JP2007-41143 ("Nishijima")
Ex-1036	U.S. Patent No. 7,873,849 ("Mucignat")

Ex-1037	Certified Translation of Chinese Patent Application Publication No. CN101458557 ("Zhenghao")
Ex-1038	U.S. Patent No. 9,122,735 ("Locker")
Ex-1039	Seungyon Claire Lee, Bohao Li, and Thad Starner, AirTouch, Synchronizing in-air hand gesture and on-body tactile feedback to augment mobile gesture interaction 3-10 (2011).
Ex-1040	Benjamin B. Bederson & James D. Hollan, Pad++: A Zooming Graphical Interface for Exploring Alternate Interface Physics 17-26 (1994).
Ex-1041	David Rogers, Feimo Hou, Chandelle Vuolo & Benjamin B. Bederson, Tossing Objects in a Desktop Environment (1996).
Ex-1042	Benjamin B. Bederson, Fisheye Menus 217-225 (2000)
Ex-1043	Leslie E. Chipman, Benjamin B. Bederson & Jennifer A. Golbeck, SlideBar: Analysis of a linear input device 1-9 (2004).
Ex-1044	Hilary Browne et al., Designing a Collaborative Finger Painting Application for Children (2000).
Ex-1045	Pekka Parhi, Amy K. Karlson & Benjamin B. Bederson, Target Size Study for One-Handed Thumb Use on Small Touchscreen Devices 203-210 (2006).

Ex-1046	Amy K. Karlson, Benjamin B. Bederson & José Contreras-Vidal, Understanding One-Handed Use of Mobile Devices 1-22 (2007).
Ex-1047	David Dearman, Amy Karlson, Brian Meyers, Ben Bederson, MultiModal Text Entry and Selection on a Mobile Device 19-26 (2011).
Ex-1048	Test of Time Awards, VIS2021, https://ieeevis.org/year/2021/info/awards/test-of-time-awards (last visited Oct. 3, 2023).
Ex-1049	Test of Time Awards, VIS2022, https://ieeevis.org/year/2022/info/awards/test-of-time-awards (last visited Oct. 3, 2023).
Ex-1050	"Choosing the Right Architecture for Real-Time Signal Processing Designs" (https://www.ti.com/lit/wp/spra879/spra879.pdf)

I. INTRODUCTION

1. I have been retained as an independent expert witness on behalf of Zepp Health Corporation ("Petitioner") in the above-captioned inter partes review ("IPR") relating to U.S. Patent No. 9,804,678 ("the '678 Patent") (Ex-1001).

2. I understand that Petitioner is petitioning for IPR of Claims 1-15 of the '678 Patent and requests that the United States Patent and Trademark Office ("PTO") cancel those claims.

3. In preparing this Declaration, I have reviewed the '678 Patent and considered the documents identified below in light of the general knowledge in the relevant art. In forming my opinions, I relied upon my education, knowledge, and experience, and considered the level of ordinary skill in the art as I discuss below.

4. I am being compensated for my work in this matter at my standard consulting rate, which is $600 per hour, plus actual expenses. My compensation is not dependent in any way upon the outcome of this matter.

II. BACKGROUND AND QUALIFICATIONS

5. All of my opinions stated in this Declaration are based on my own personal knowledge and professional judgment. In forming my opinions, I have relied on my knowledge and experience in designing, developing, researching, and teaching the technology referenced in this Declaration.

6. I am over 18 years of age and, if I am called upon to do so, I would be competent to testify as to the matters set forth herein. I understand that a copy of my current curriculum vitae, which details my education and professional and academic experience, is being submitted as Ex-1003. The following provides a brief overview of some of my experience that is relevant to the matters set forth in this Declaration.

7. I am currently Professor Emeritus of Computer Science at the University of Maryland ("UMD"). From 2014 to 2018, I was the Associate Provost of Learning Initiatives and Executive Director of the Teaching and Learning Transformation Center at the UMD. I am a member and previous director of the Human-Computer Interaction Lab ("HCIL"), the oldest and one of the best known Human-Computer Interaction ("HCI") research groups in the country. I am the cofounder of the J.S. Bryant School, a therapeutic high school planned to open in 2025. I was also co-founder and Chief Scientist of Zumobi, Inc. from 2006 to 2014, a Seattle-based startup that is a publisher of content applications and advertising platforms for smartphones. I am also co-founder and co-director of the International Children's Digital Library ("ICDL"), a web site launched in 2002 that provides the world's largest collection of freely available online children's books from around the world with an interface aimed to make it easy for children and adults to search and read children's books online. I was also cofounder and Chief

Technology Officer of Hazel Analytics, a data analytics company to improve food safety and better public health whose product sends alerts in warranted circumstances. In addition, I have for more than 25 years consulted for numerous companies in the area of user interfaces, including Hillcrest Labs, Lockheed Martin, Logitech, Microsoft, NASA Goddard Space Flight Center, the Palo Alto Research Center, and Sony.

8. For more than 30 years, I have studied, designed, and worked in the field of computer science and Human-Computer Interaction (HCI). My experience includes 30 years of teaching and research, with research interests in HCI and the software and technology underlying today's interactive computing systems. This includes the design and implementation of hardware and software systems including graphical user interfaces with capacitive and other touch screen sensors, and interactive applications on a range of devices, including embedded systems, controllers, smart phones, and PDAs.

9. At UMD, I am focused primarily on the area of HCI, a field that relates to the development and understanding of computing systems to serve users' needs. Researchers and practitioners in this field are focused on making universally usable, useful, efficient, and appealing systems to support people in their wide range of activities. My approach is to balance the development of innovative technology that serves people's practical needs. Example systems following this

approach that I have built include Cortex-I (1992 embedded computer vision system that sensed licensed plates with custom motor, camera and controller), Audio Augmented Reality (1995 embedded system for sensing a user's location and playing audio suited to that location), Fisheye Menus (2000 software for sensing movement within and selection of linear list of items in a menu), PhotoMesa (2001 software for end users to browse personal photos), DateLens (2002 software for end users to use their mobile devices to efficiently access their calendar information), SlideBar (2005 linear sensor to control scrolling), LaunchTile (2005 "home screen" software for mobile devices to allow users to navigate apps in a zoomable environment), SpaceTree (2001 software for end users to efficiently browse very large hierarchies), ICDL (as described above), and StoryKit (a 2009 iPhone app for children to create stories).

10. Throughout the 1990s and 2000s, I worked on a range of "zoomable user interfaces," which are systems that support the multi-scale and spatial organization of and magnification-based navigation among multiple documents or visual objects. I built several different "ZUI" systems over the years, including Pad++, Jazz and Piccolo. In those systems, I used a range of solutions to allow users to control zooming through the information space. The most common approach for systems with three button mice was to use the middle button for zooming in and the right button for zooming out. *See* Ex-1040, p. 18. The user

would hold the button down, and the system would smoothly animate zooming in or out – so that the user controlled how much the system zoomed based on the duration that the button was pressed. *See id.*, pp. 20, 22.

11. In 1995 and 1996, I supervised graduate student David Rogers and other students in the development of a user interface approach that allowed a user to "toss" an object across long distances on their screen with their mouse. *See* Ex1041, p. 1. Motivated by increasingly large computer screens, we recognized a need to help users move items long distances without necessarily having to drag the item that entire distance manually. *See id.* Instead, we calculated the speed and direction that the user dragged an object with their mouse. When a user released the mouse button, if the speed was greater than a threshold, our code calculated the path of where to animate the object based on several factors including the speed and direction of the mouse at the time of mouse button release. The figure below from a paper we wrote in 1996 shows the path of a tossed object. This resulted in David Rogers's master's thesis in 1995 and a paper that we submitted to the 1996 Conference on Human Factors in Computing Systems (CHI 1996).

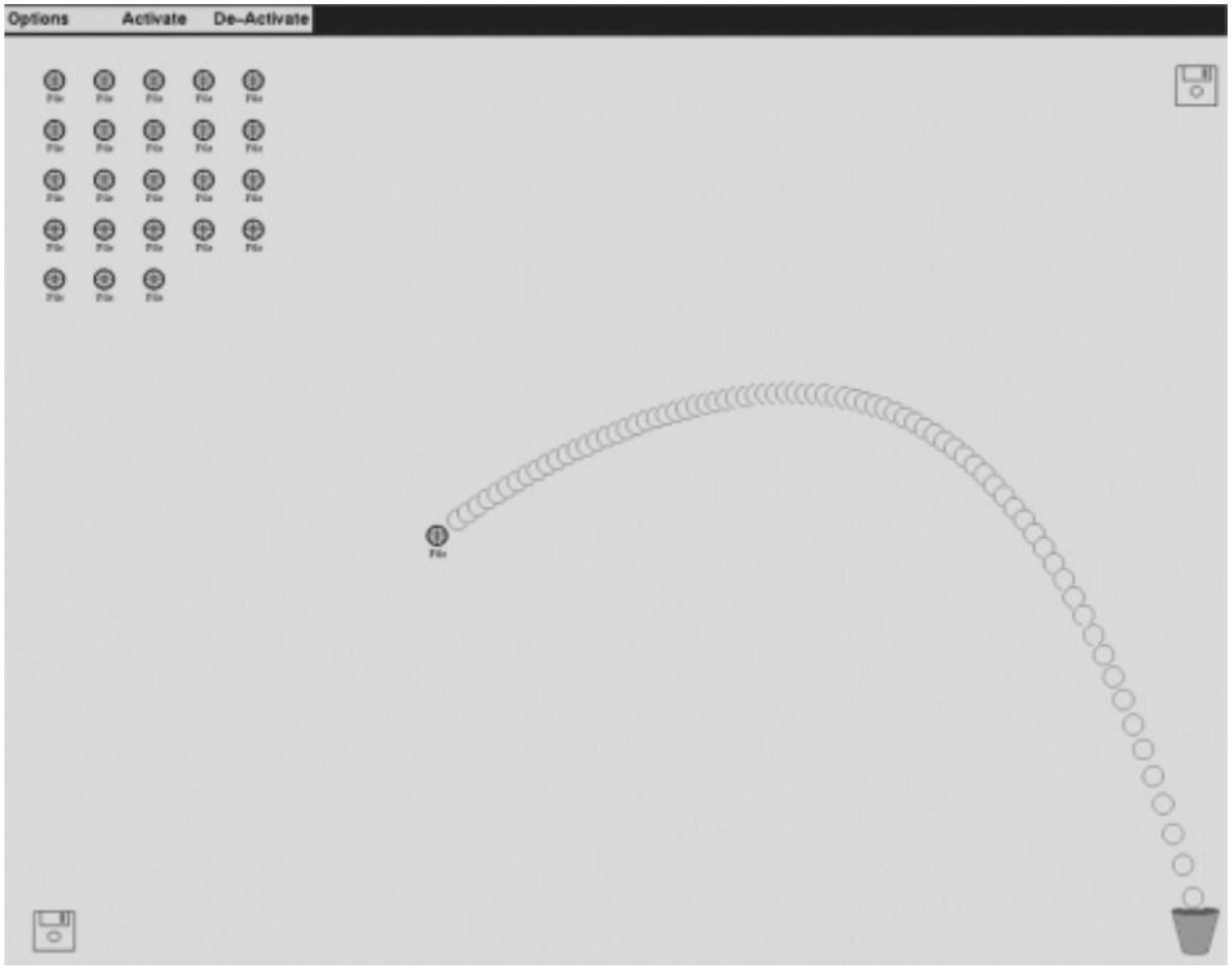

Exemplar Figure of Tossing.

12. In 1999 and 2000, I worked on a mechanism to address the challenge that users faced when selecting one item from a long menu. As I described in a paper entitled "Fisheye Menus" that I published in the 2000 Proceedings of the ACM Symposium on User Interface Software and Technology, existing techniques typically involved lengthy and slow scrolling techniques. *See* Ex-1042, p. 8. I created an alternative solution that fit all of the elements onto a single screen thereby completely eliminating the need to scroll. *See id.*, p. 1. This approach used

the concept of "fisheye distortion" to shrink some of the elements, while keeping the elements that are under the cursor to be full size so the user could easily see and select them. *See id*. This approach, as depicted in the figure below and described further in the paper, was later used in a number of commercial products such as the Apple MacOS Dock.

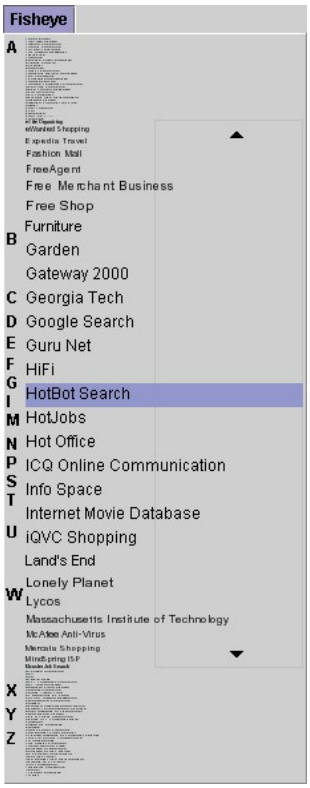

Exemplar Figure of Fisheye Menu.

13. Starting in 2000, I supervised graduate student Leslie Chipman who was working on a general solution to improve the user experience of people scrolling long documents on computers. Our solution relied on a passive haptic physical linear input device we called the "Slidebar." *See* Ex-1043, p. 1. The Slidebar was designed

to sit on either side of the keyboard to be used with the nondominant hand for scanning and rough positioning, and then if the user wanted to switch to reading, the dominant hand could be used for more accurate positioning. *See id*. With a physical range of motion of approximately two inches, the full range could be accessed by moving just the fingers without moving the entire hand. *See id*. This took advantage of human proprioception—the fact that people have excellent ability to know where their body is—and allowed the user to scroll long documents completely eyes-free. *See id*, p. 4. They did not need to look at the device or the screen to, for example, move a mouse pointer to a graphical scroll bar. Instead, they could focus on their primary task of reading. This work was published in 2004.

14. In April 2000, I visited Professors Wayne Westerman and John Elias at the University of Delaware and gave a talk entitled "Zoomable User Interfaces and Single Display Groupware." This resulted in a collaboration with Professor Westerman, graduate student Hilary Browne, and others where we used their FingerWorks capacitive Multi-Touch Surface as the input device for a multi-touch finger painting program for children. *See* Ex-1044, p. 1. The project used this input device to support a computer painting program that allowed children to paint with their fingers by directly touching the sensing surface. In contrast to the mouse input more typically used in this time period, this approach enabled us to create a

more natural interaction environment. *See id*. This work, depicted in the figure below, was published in a September 2000 technical report.

Exemplar Figure of Multi-Touch Finger Painting Program for Children.

15. Throughout the 2000's, I worked on a range of interfaces for mobile devices with a focus on interface design for touch interfaces, including those with capacitive sensors. During this period, it became apparent that some positions on a screen were easier to access than others, especially when used with a single hand. To understand this issue, I led a range of studies that resulted in two papers published in 2006 (Ex-1045) and 2007 (Ex-1046). The following figure summarizes the results of one of the studies, and shows that generally speaking, when using a single hand, the center of the screens were easier for users to touch than the edges of the screen, and that the corners of the screen were the hardest positions to touch.

Table 2. Preference and movement time maps for each device. Depth of color in columns 1 and 2 indicate stronger user agreement.

	Subjective Difficult Regions	Subjective Easy Regions	Preference -Derived Regions Easy Medium Hard	Data-Derived Regions Fastest Slowest
SMALL	8 5 1 9 10	10 11 15 13 16 15 13 11 4 4		
FLIP	8 3 1 1 2 5 4 10	11 12 10 12 16 14 14 16 10 7 8 4		
LARGE	12 6 5 5 2 1 3 3 4 1 2 6 5 7 13 12 13	4 5 4 7 10 9 14 15 12 16 16 13 13 13 9 6 7 7 1 2 1		
PDA	13 8 7 9 10 4 2 4 9 3 1 4 9 3 1 5 11 4 2 8 14 9 9 14	2 5 5 3 3 11 11 7 4 15 16 8 6 15 16 5 4 11 8 4 1 2 2		

Ex-1046, Table 2.

16. This work on touch screen mobile devices led to my creation of Zumobi in 2006, where I was responsible for investigating new software platforms and developing new user interface designs that provide efficient and engaging interfaces to permit end users to access a wide range of content on mobile platforms (including the iPhone and Android-based devices). For example, I

designed and implemented software called "Ziibii," a "river" of news for iPhone that used a capacitive sensor for controlling linear movement through news; software called "ZoomCanvas," a zoomable user interface for several iPhone apps; and iPhone apps including "Inside Xbox" for Microsoft and Snow Report for REI. At the ICDL, I have, since 2002, been the technical director responsible for the design and implementation of the web site, www.childrenslibrary.org (originally at www.icdlbooks.org). In particular, I have been closely involved in designing the user interface as well as the software architecture for the web site since its inception in 2002.

17. Moreover, I published a 2010 paper (Ex-1047) that used an integrated accelerometer in a mobile device that used tilt to select a command along the direction of movement. The middle images in the figure below show how a rectangle could be selected by tilting that would then apply a visual format to text. As I explained in the paper, "[g]estures exceeding 30 degree changes from a continually updated 'neutral' position were recognized as a command along the direction of movement." *Id.*, p. 21.

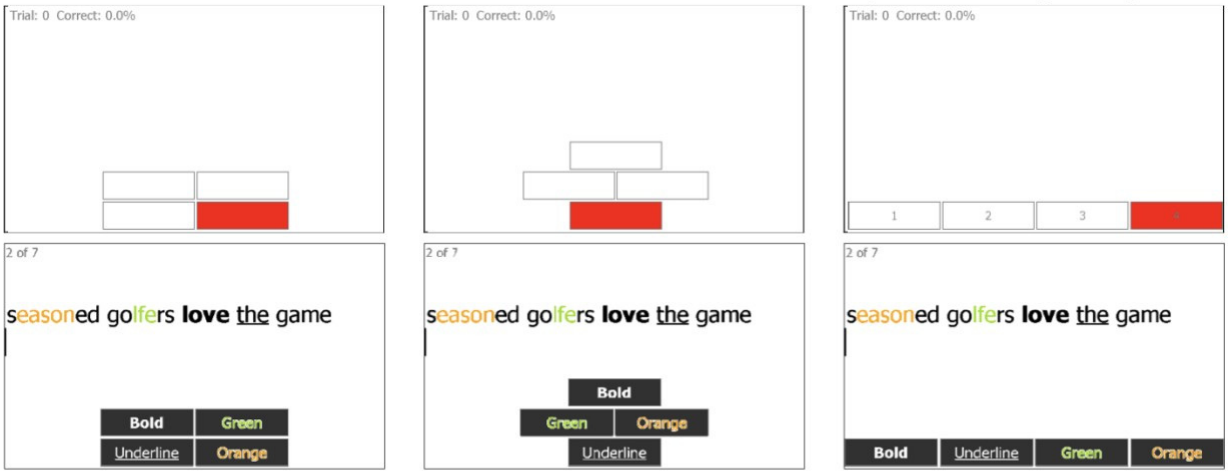

Figure 2. The software interface for the Target Selection (top) and Text Formatting (bottom) tasks. Presented are the Foot (left), Tilt (middle) and Touch/Voice (right) interfaces. The target to select for the Target Selection task is red. The phrase used in the Text Formatting task includes all four formats: 'eason' is orange; 'lfe' is green; 'love' is bold; and 'the' is underlined.

Exemplar Figure of Using Tilt to Select a Command.

18. Beginning in the mid-1990s, I have been responsible for the design and implementation of numerous other web sites in addition to the ICDL. For example, I designed and built my own professional web site when I was an Assistant Professor of Computer Science at the University of New Mexico in 1995 and have continued to design, write the code for, and update both that site (which I moved to the UMD in 1998, currently at http://www.cs.umd.edu/~bederson/) as well as numerous project web sites, such as Pad++, http://www.cs.umd.edu/hcil/pad++/. I received the Janet Fabri Memorial Award for Outstanding Doctoral Dissertation for my Ph.D. work in robotics and computer vision. I have combined my hardware and software skills throughout my career in HCI research, building various interactive electrical and mechanical systems that couple with software to provide an innovative user experience.

19. My work has been published extensively in more than 160 technical publications, and I have given about 100 invited talks, including 9 keynote lectures. I have won a number of awards including the Brian Shackel Award for "outstanding contribution with international impact in the field of HCI" in 2007, and the Social Impact Award in 2010 from the Association for Computing Machinery's ("ACM") Special Interest Group on Computer Human Interaction ("SIGCHI"). ACM is the primary international professional community of computer scientists, and SIGCHI is the primary international professional HCI community. I have been honored by both professional organizations. I am an "ACM Distinguished Scientist," which "recognizes those ACM members with at least 15 years of professional experience and 5 years of continuous Professional Membership who have achieved significant accomplishments or have made a significant impact on the computing field." I am a member of the "CHI Academy," which is described as follows: "The CHI Academy is an honorary group of individuals who have made substantial contributions to the field of HCI. These are the principal leaders of the field, whose efforts have shaped the disciplines and/or industry and led the research and/or innovation in human-computer interaction." The criteria for election to the CHI Academy are: (1) cumulative contributions to the field; (2) impact on the field through development of new research directions and/or innovations; and (3) influence on the work of others. I have received two

"Test of Time" awards from IEEE InfoVis for my 2001 and 2002 work on visualizing hierarchies, including those containing digital photos. *See* Ex-1048, Ex-1049.

20. I have appeared on radio shows numerous times to discuss issues relating to user interface design and people's use and frustration with common technologies, web sites, and mobile devices. My work has been discussed and I have been quoted by mainstream media around the world over 120 times, including by the New York Times, the Wall Street Journal, the Washington Post, Newsweek, the Seattle Post Intelligencer, the Independent, Le Monde, NPR's All Things Considered, New Scientist Magazine, and MIT's Technology Review.

21. I have designed, programmed, and publicly deployed dozens of user facing software products that have cumulatively had millions of users. My work is cited by several major companies, including Amazon, Apple, Facebook, Google, and Microsoft. I am a named inventor on 14 U.S. patents and 20 U.S. patent applications. The patents are generally directed to user interfaces/experience.

22. I received a B.S. degree in Computer Science with a minor in Electrical Engineering in 1986 from the Rensselaer Polytechnic Institute. I received M.S. and Ph.D. degrees in Computer Science in 1989 and 1992, both from New York University.

23. Based on my experience and education, I believe that I am qualified to opine as to the knowledge and level of skill of one of ordinary skill in the art at the time of the alleged invention of the ’678 Patent, as well as the state of the art at that time.

III. INFORMATION CONSIDERED

24. In preparation for this declaration, I have considered the materials discussed in this declaration, including, for example, the ’678 Patent, the references cited by the ’678 Patent, the prosecution history of the ’678 Patent (including the references cited therein), various background articles and materials referenced in this declaration, and the prior art references identified in this declaration. In addition, my opinions are further based on my education, training, experience, and knowledge in the relevant field.

IV. RELEVANT LEGAL STANDARDS

25. I am not an attorney and offer no legal opinions. For the purposes of this Declaration, I have been informed about certain aspects of the law that are relevant to my analysis, as summarized below.

A. Claim Interpretation

26. I have been informed and understand that in an IPR proceeding, claims are to be interpreted according to the *Phillips* claim construction standard. I understand that under this standard, the meaning of claim terms is considered from

the viewpoint of a POSITA at the time of the alleged invention. I have been informed and understand that claim construction is a matter of law and that the final claim constructions for this proceeding will be determined by the Patent Trial and Appeal Board ("PTAB").

27. I have been informed that claim terms are generally given their ordinary and customary meaning as understood by one of ordinary skill in the art in light of the specification and the prosecution history pertaining to the patent. I understand, however, that claim terms are generally not limited by the embodiments described in the specification.

28. I understand that in addition to the claims, specification, and prosecution history, over evidence may be considered to ascertain the meaning of claim terms, including textbooks, encyclopedias, articles, and dictionaries. I have been informed that his other evidence is often less significant and less reliable than the claims, specification, and prosecution history.

B. Perspective of One of Ordinary Skill in the Art

29. I have been informed and understand that a patent is to be understood from the perspective of a hypothetical "person of ordinary skill in the art" ("POSITA"). Such an individual is considered to possess normal skills and knowledge in a particular technical field (as opposed to being a genius). I understand that in considering what the claims of a patent require, what was known

prior to that patent, what a prior art reference discloses, and whether an invention is obvious or not, one must use the perspective of such a POSITA.

C. Obviousness

30. I have been informed and understand that a patent claim is obvious under 35 U.S.C. § 103, and therefore invalid, if the claimed subject matter, as a whole, would have been obvious to a POSITA as of the priority date of the patent based on one or more prior art references and/or the knowledge of a POSITA.

31. I understand that an obviousness analysis must consider (1) the scope and content of the prior art, (2) the differences between the claims and the prior art, (3) the level of ordinary skill in the pertinent art, and (4) secondary considerations, if any, of non-obviousness (such as unexpected results, commercial success, long felt but unmet need, failure of others, copying by others, and skepticism of experts).

32. I understand that a prior art reference may be combined with other references to disclose each element of the invention under 35 U.S.C. § 103. I understand that a reference may also be combined with the knowledge of a POSITA, and that this knowledge may be used to combine multiple references. I further understand that a POSITA is presumed to know the relevant prior art. I understand that the obviousness analysis may take into account the inferences and creative steps that a POSITA would employ.

33. In determining whether a prior art reference would have been combined with other prior art or other information known to a POSITA, I understand that the following principles may be considered:

- whether the references to be combined involve non-analogous art;
- whether the references to be combined are in different fields of endeavor than the alleged invention in the Patent;
- whether the references to be combined are reasonably pertinent to the problems to which the inventions of the Patent are directed;
- whether the combination is of familiar elements according to known methods that yields predictable results;
- whether the combination involves the substitution of one known element for another that yields predictable results;
- whether the combination involves the use of a known technique to improve similar items or methods in the same way that yields predictable results;
- whether the combination involves the application of a known technique to a prior art reference that is ready for improvement, to yield predictable results;
- whether the combination is "obvious to try";

- whether the combination involves the known work in one field of endeavor prompting variations of it for use in either the same field or a different one based on design incentives or other market forces, where the variations are predictable to a POSITA;
- whether there is some teaching, suggestion, or motivation in the prior art that would have led one of ordinary skill in the art to modify the prior art reference or to combine prior art reference teachings to arrive at the claimed invention;
- whether the combination requires modifications that render the prior art unsatisfactory for its intended use;
- whether the combination requires modifications that change the principle of operation of the reference;
- whether the combination is reasonably expected to be a success; and
- whether the combination possesses the requisite degree of predictability at the time the invention was made.

34. I understand that in determining whether a combination of prior art references renders a claim obvious, it is helpful to consider whether there is some teaching, suggestion, or motivation to combine the references and a reasonable expectation of success in doing so. I understand, however, that a teaching, suggestion, or motivation to combine is not required.

V. SUMMARY OF OPINIONS

35. It is my opinion that Claims 1-15 of the ’678 Patent would have been obvious under 35 U.S.C. § 103 on the following grounds:

- **Ground 1:** Claims 1-5, 7, 10-12, and 14 are rendered obvious by U.S. Patent No. 7,606,552 to Orr (“Orr,” Ex-1005) in view of U.S. Application Publication No. 2010/0194682 to Orr (“Orr682,” Ex-1006).
- **Ground 2:** Claims 6, 8, 9, and 15 are rendered obvious by Orr, in view of Orr682, in further view of U.S. Patent No. 9,019,230 to Li (“Li,” Ex-1007).
- **Ground 3:** Claims 1-5, 7, 10-12, and 14 are rendered obvious by Orr in view of Orr682 and U.S. Patent No. 8,914,075 to Pasquero (“Pasquero,” Ex-1009).
- **Ground 4:** Claims 6, 8, 9, and 15 are rendered obvious by Orr in view of Orr and Pasquero, in further view of Li.
- **Ground 5:** Claims 12 and 13 are rendered obvious by Orr in view of Orr682 and Pasquero, in further view of U.S. Patent Publication No. 2009/0164219 to Yeung (“Yeung,” Ex-1008).
- **Ground 6:** Claims 1-5, 7, and 10-14 are rendered obvious by Orr in view of Orr682 and Yeung.

VI. THE CHALLENGED PATENT

36. The ’678 Patent is directed to a wristwatch wherein some components can be operated in multiple power modes. Ex-1001, Abstract, 5:48-57. For example, the display, the touch sensor, and/or other components may operate in a “power saving mode” (or “low consumption mode”) “for preserving battery,” while “the whole wristwatch can … be powered [on]” “for displaying time … on the display” in a “time display mode.” *Id.*, 5:48-57.

37. The ’678 Patent discloses a “touch panel” and an “inertial sensor” for use in “switch[ing] from a first power mode, such as a power saving mode, to a second power mode, such as a time display mode.” *Id.*, 6:3-22. In particular, from a sleep state, an inertial sensor may detect a tap, which wakes up a touchscreen, and the touchscreen may then detect an additional gesture, which transitions the device to a higher power mode. *Id.*, 6:3-22, 7:40-49. For example, a switch between power modes may be triggered by “detecting a tap” “with the inertial sensor” and/or “a user gesture on the … touch panel.” *Id.* The inertial sensor (e.g., “accelerometer” with “processor”) “is always powered on in the first low power mode,” while the “touch panel” is “off.” *Id.* Thus, for example, a “power on signal” generated by the inertial sensor “is used to wake up” the “touch panel” and “touch controller” “after detection of a likely tap,” and, later, the touch controller “generates a second wake up signal” “to wake up the microcontroller” and the

"display" when the touch controller "confirms the tap detection." *Id.*, 7:40-49, 7:65-8:3, 9:18-26.

38. To that end, to further conserve power and extend battery life, the'678 Patent also discloses "discriminat[ing] between changes in" "acceleration signals" "caused by" "a tap" versus "any other acceleration caused when the wristwatch is displaced or manipulated in normal use" based on the "frequency," "duration of the pulse," "amplitude of the pulse," "direction of the acceleration," and/or "slope of the acceleration." *Id.*, 6:23-7:23.

VII. PATENT PROSECUTION HISTORY

39. I understand that the '678 Patent was filed as Application No. 14/352,727 ("the '727 Application") and issued on October 31, 2017. Ex-1001, Cover.

40. I further understand that the '678 Patent File History has been submitted as Ex-1004. The '727 Application was filed on October 12, 2012, claiming priority to a Swiss application filed on October 18, 2011.

41. The '678 Patent was allowed over the Examiner's obviousness rejections based on the applicants' arguments, and the Examiner's agreement, that none of the references discloses "a portable device whose powering up comprises … in response … to a detection of a gesture by an inertial sensor, waking up a touch controller for interpreting touch signal provided by a touch panel; and …

waking up the microcontroller in said wristwatch upon a detection of a tap gesture by the touch controller." *See* Ex-1004, 0463, 0465, 0515. However, this was wellknown in the art, as shown below (§§XII, XIII).

42. While Orr (Ex-1005) is similar to EP1785808, which was presented to the PTO during prosecution in an Information Disclosure Statement (IDS), the Petition applies Orr only in combination with art that was not of record during prosecution, and the Examiner never applied EP1785808 in a rejection or provided a view on its relevance. The grounds and argument presented in the Petition are not cumulative of any considered during prosecution.

43. None of the references relied upon in the Petition in combination with Orr (i.e., Orr682 (Ex-1006), Li (Ex-1007), Pasquero (Ex-1009), and Yeung (Ex-1008)) was before the Examiner during prosecution of the '678 Patent. Nor were any similar teachings of other references discussed by the Examiner.

44. As I explained in paragraph 41, the '678 Patent was allowed based on the applicants' arguments, and the Examiner's agreement, that the prior art does not disclose "a portable device whose powering up comprises … in response … to a detection of a gesture by an inertial sensor, waking up a touch controller for interpreting touch signal provided by a touch panel; and … waking up the microcontroller in said wristwatch upon a detection of a tap gesture by the touch controller" (*see* Ex-1004, 0463, 0465, 0515), yet Pasquero and Yeung teach such

features in a wristwatch, and Orr682 teaches such tap detection. Moreover, no prior art reference that was before the Examiner discloses Orr682's tap-detection methods that depend on the slope and/or frequency of acceleration measurements. In sum, the grounds presented in the Petition are material and not cumulative of previous art considered by the Examiner.

45. In my opinion, the Examiner erred by overlooking the clear and unambiguous teachings of EP1785808. Again, as I explained in paragraph 41, the '678 Patent was allowed based on the applicants' arguments, and the Examiner's agreement, that the prior art does not disclose "a portable device whose powering up comprises … in response … to a detection of a gesture by an inertial sensor, waking up a touch controller for interpreting touch signal provided by a touch panel; and … waking up the microcontroller in said wristwatch upon a detection of a tap gesture by the touch controller" (*see* Ex-1004, 0463, 0465, 0515), but Orr indisputably teaches these features. However, the record is silent on the Examiner's view of EP1785808.

46. As I explained in detail below, the '678 Patent's claims would have been obvious in view of the prior art.

VIII. LEVEL OF ORDINARY SKILL IN THE ART

47. A person of ordinary skill in the art at the relevant time ("POSITA") would have had a bachelor's degree in electrical engineering, computer science,

computer engineering, or a related field, and 2-3 years of experience in the research, design, development, or testing of user interfaces, inertial sensors, touchscreens, and human-computer interaction in mobile devices, with additional education substituting for experience and vice-versa.

IX. TECHNOLOGY BACKGROUND

48. To provide background for the element-by-element analysis of the claims to follow, below I present an overview of the state of the art existing at the time of the alleged invention relating to power management, accelerometer-based movement detection, and touchscreen-based gesture detection in portable electronic devices, including watches. As I will describe from a high-level functional perspective, in the next section based on specific prior art, and then in subsequent sections on a limitation-by-limitation basis, all of these technologies and techniques were well-known to those of ordinary skill in the art at the time of the alleged invention claimed in the ’678 Patent, and a POSITA would have readily understood the combination of elements of Claims 1-15 to have been obvious.

Incorporating Features of Other Types of Electronic Devices Into Wristwatches

49. By the time of the ’678 Patent, it was well-known to take functionalities such as touchscreens and input sensors found in larger electronic devices such as PDAs and cellular phones and incorporate them into smaller form

factors, such as wristwatches. For example, by 2001, IBM had introduced a prototype wristwatch with a touch-sensitive digital matrix LCD screen running the Linux operating system, as shown below. Ex-1030, Ex-1031.

50. The IBM Linux watch was a highly capable device and included a "touch sensitive LCD display 96x120 pixels" and a powerful processor capable of running the Linux operation system version 2.2 and supporting X11 R6 graphics. Ex-1030, 2-3. IBM reported that the "watch will provide users with calendar, address book, and to-do list functions." *Id.*, 2. As IBM stated in a 2002 IEEE article about the Linux watch, "Our work has convinced us that a lot of functionality can be squeezed into small devices." Ex-1031, 9. Thus, by the early 2000s, a POSITA would have understood that adapting capable touch-screen

interfaces and other methods of user input for use in the form factor of a watch was not only possible but had also been successfully achieved.

51. This knowledge is also reflected in patents from that time period. For example, U.S. Patent No. 8,344,998 ("Fitzgerald," Ex-1010) with an early 2008 priority date, describes a small electronic watch comprising a "3-axis accelerometer" and a "body 16 that houses a plurality of layers, including an integrated display 18 (which may be a touchscreen) and a movement subassembly 20, for displaying information, including time." Ex-1010, 3:18-27, 7:8-26, 11:28-46.

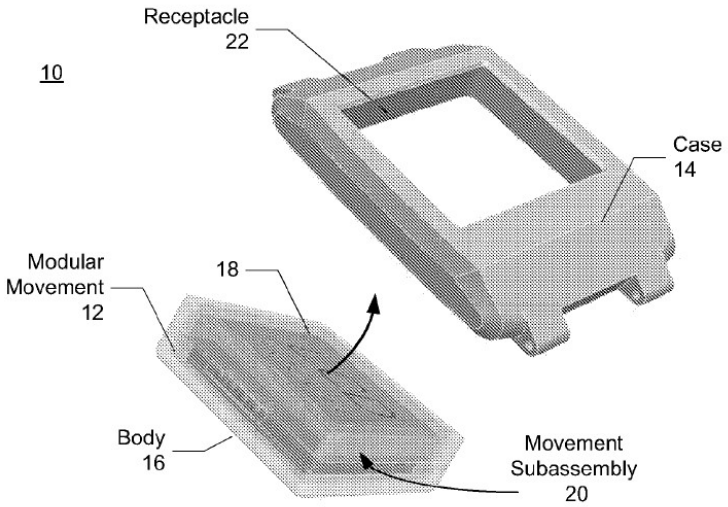

FIG. 1A

52. As another example, World Intellectual Property Organization Publication No. WO 2006/120211 ("Tecchiolli," Ex-1013) discloses "an energy saving device associated with a portable electronic apparatus, in particular of the

so-called 'wearable' type." Ex-1013, 1:4-6. This "portable electronic device" is a watch "to be worn on the arm or wrist, in order to allow the user to operate efficiently with free hands," as shown in Figure 2, and comprises a motion detector to switch between multiple power modes. Ex-1013, 1:4-10, 2:12-14, 9:27-10:5, Fig. 2; *see also id.*, 4:28-31 ("…an energy saving device according to the invention is associated with a portable electronic apparatus, such as for example a wristwearable system able to be worn on an operator's arm.").

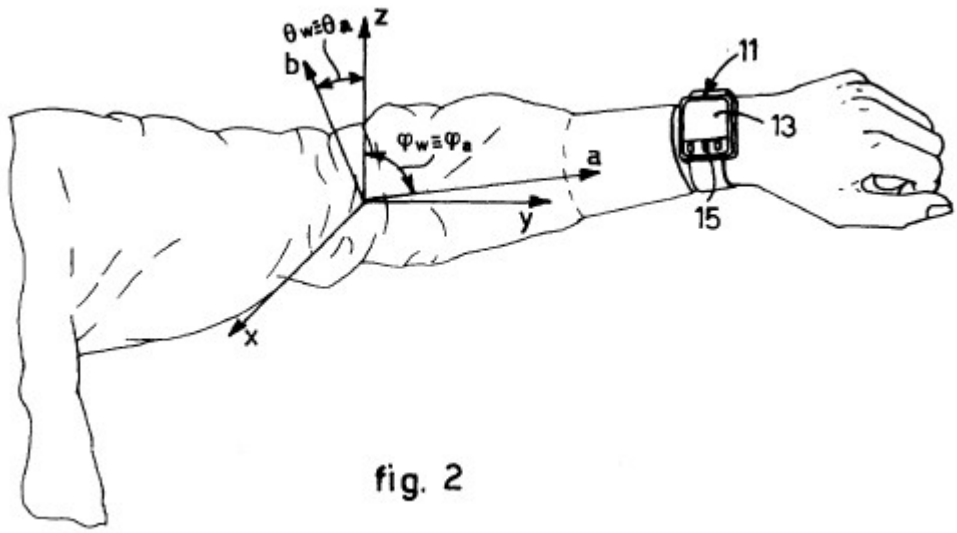

fig. 2

53. Tecchiolli explains that "there is growing demand" for portable electronic devices with significant computing power previously reserved for larger electronic devices:

> This type of portable electronic apparatuses, for the normal functional requirements of transportability, must have characteristics of small size, limited weight, and high feed autonomy. Moreover, there is a growing demand, on the part of users, to implement said portable electronic apparatuses with new, digital multi-media and telecommunication

> technologies such as for example: display interfaces with increasingly high quality and able to work in any condition of environmental visibility; increased ***calculating power that enables to actuate on mobile devices applications which once were only intended for personal computers***; wireless communication and data exchange systems, and others.

Ex-1013, 1:19-31.[2] Tecchiolli's description of the state of the art and, in particular, the growing demand for ever smaller but still powerful electronic devices, including watches and other wearable devices, is consistent with my recollection and would be well-known to persons of ordinary skill in the art at the time of the '678 Patent.

54. Tecchiolli later describes some of the requirements that consumers had for such wearable devices, including that they: have features such as "wireless communication," "exploit the multimedia services offered, for example video streaming," have "evolved graphical interfaces," have "a decidedly limited weight, so that it is not bulky and heavy or able to reduce the users freedom of movement with extended use, cause discomfort and tiredness of the limb," and have "optimize[d] energy consumption." Ex-1013, 1:33-3:11. Given the difficulty of achieving these goals in a wearable device with a limited battery, Tecchiolli (and many other inventors in the years before the '678 Patent) devised techniques for

[2] Unless indicated otherwise, all emphasis is added.

maximizing battery life in wearable and other portable electronic devices, as I describe below.

55. It was also well-known to provide the telephony functionality of cellular phones and incorporate them into smaller form factors, such as wristwatches. For example, by 1999, Samsung had introduced the SPH-WP10, a "smartphone and a watch in one" that "could last for 90 minutes of talk time and 60 hours on standby," as shown below. Ex-1021.

Image of Samsung SPH-WP10.

56. In 2009, Samsung released its S9110, its second "phone/watch hybrid," as shown below. *Id.* The S9110 could last for "more than four hours" of "talk time" and "had both a touch screen and physical buttons." *Id.*

Image of Samsung S9110.

57. LG debuted its GD910 "smartwatch phone," shown below, at CES 2008, which it released in 2009. *Id.* The GD910 featured a tempered glass" "diagonal screen," "voice recognition," and "text to speech." *Id.*

Image of LG GD910.

58. This knowledge is also reflected in patents from that time period. For example, U.S. Pat. App. Pub. No. 2010/0146463 ("Cho," Ex-1017) discloses a "watch phone," as shown in Figures 3 and 4A-4B, and "a method for handling an incoming call using the watch phone," as shown in Figures 5A-5B. Ex-1017, Abstract, Figs. 3, 4A-4B, 5A-5B.

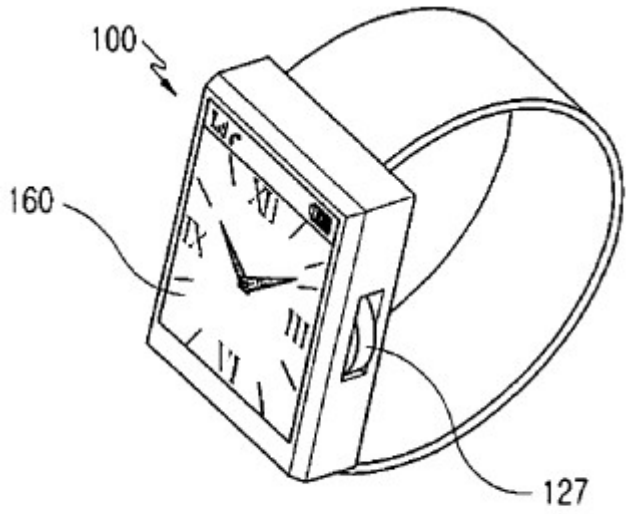

FIG.3

Id., Fig. 3.

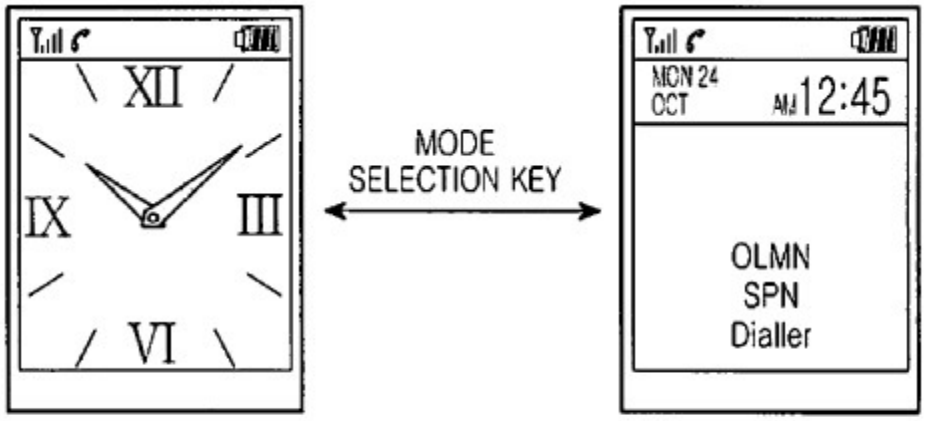

FIG.4A FIG.4B

Id., Figs. 4A-4B.

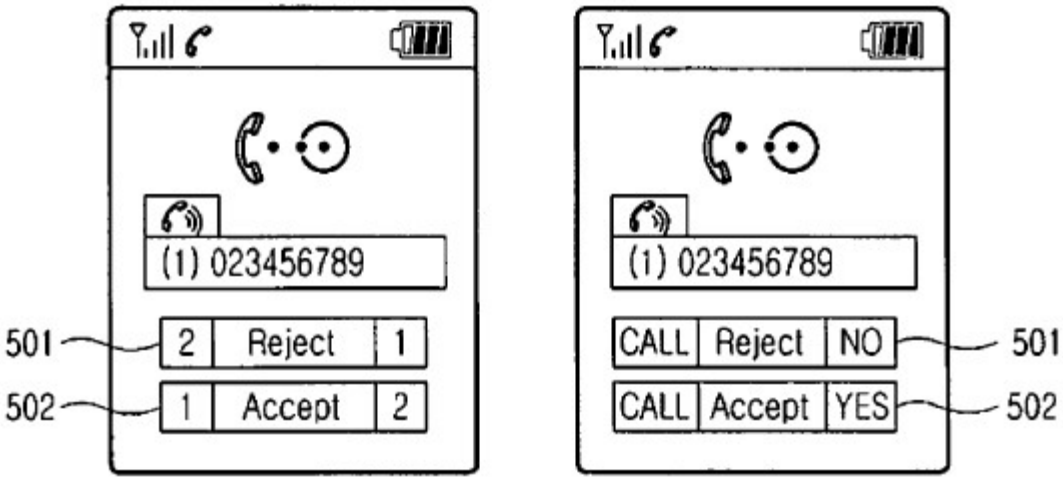

Id., Figs. 5A-5B.

59. "In the watch phone, a display device includes a touch screen panel and a display." *Id.*, Abstract. In a "watch mode," the "touch screen panel" is "turn[ed] off," and in an "idle mode or upon receipt of an incoming call," the "touch screen panel" is "turn[ed] on." *Id.*

Battery Life and Power Mode Switching

60. I have used a wide range of mobile phones and other electronic devices since the 1990s. All these battery operated devices had features to conserve battery power. This is understandable because battery life was considered to be a "critical concern" when designing systems and applications for mobile devices. Ex-1032, 1; Ex-1033, 74, 88. "According to a user survey by Gartner in France, Germany, Italy, Spain, Sweden and United Kingdom, battery life, size, weight and price were the most important considerations for people buying mobile phones." Ex-1033, 74.

61. Every one of the mobile phones that I have used had some form of "sleep" or "standby" mode wherein the phone would continue to operate in a lowpower mode with a display being off while being able to receive phone calls. In fact, since a major point of mobile phones is to make calls, while being mobile (and thus running on a battery), all mobile phones that I am aware of supported this form of operation. That is, they could operate in a low power mode, typically called sleep or standby with a display being off while continuing to be able to receive calls. To conserve battery power, these phones enter the sleep or standby mode after a preset time period of inactivity.

62. Such power saving functionality was not limited to phones but has been consistently applied to all types of battery-powered electronic devices. For example, as early as 1997 patents such as U.S. Patent No. 5,612,931 ("Sato," Ex1034) disclosed "a digital electronic wristwatch 1" with "an attitude switch … for detecting an inclination of the wristwatch 1 and performing a switching operation," as shown in Figure 1 below. Ex-1034, 3:4-11.

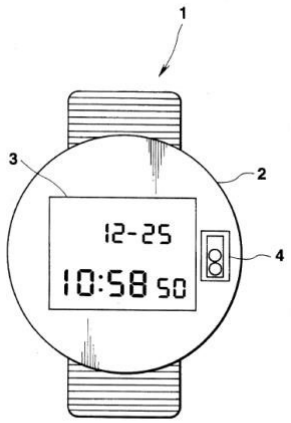

FIG.1

63. Sato explains that the "switching operation" relates to turning on or off the lighting device such that after a predetermined motion (or set of motions) has been detected "the CPU 15 executes illumination control processing … thereby outputting a control signal to the driver 20 … turn[ing] on the lighting device 21 to illuminate the LCD17." Ex-1034, 5:40-46. Sato teaches that "the lighting device 21 can be lighted for a predetermined time period" when the attitude detection switch has detected the required movement "within the predetermined time period." Ex-1034, 6:18-24. Sato explains that this technique is advantageous because "the lighting device 21 is prevented during walking from being turned on and off unintentionally, and can be lighted in a reliable manner," resulting in avoiding "unintentional lighting of the lighting device … thereby saving the power consumption of the wristwatch 1." Ex-1034, 6:18-32.

64. Tecchiolli, described above, is another example of a wrist-worn portable electronic device that focused on power management considerations. Tecchiolli explains that "[o]ne purpose of the present invention is therefore to achieve an energy saving device for a portable electronic apparatus which allows to optimize the energy saving by deactivating, completely or at least partly, the apparatus in its condition of non-use." Ex-1013, 4:7-11. In particular, Tecchiolli is directed at automatically determining when the device is in use or in a non-use state, by analyzing position or activity, and activating "only when it is taken to a position that coincides with the position of use" and is "de-activated, or at least partly switched off, when it is in other positions, different from the positions of use." Ex-1013, 4:32-5:32.

65. As another example, Japanese Patent Application Publication No. JP2007-41143 ("Nishijima," Ex-1035) is directed to a mobile device "equipped with an autonomous navigation device for a pedestrian" and includes an "acceleration detection means for detecting the degree of tilt of the displaying part of the device." Ex-1035 ¶¶1, 10. Nishijima notes a problem with prior art pedestrian navigation devices in that the "map drawing processing is continued even if the device is held in an orientation where the device screen is not being viewed causing a problem of consuming power. Ex-1035 ¶8. Accordingly, Nishijima discloses determining when "the device is in a use state where the

pedestrian using the device is not viewing the drawing image" and accordingly, "[w]hen the tilt of the device is detected to be outside a prescribed angle for a prescribed amount of time," switching to "low power consumption by halting display calculation processing for drawing data." Ex-1035 ¶18. When the device "determines that the detected tilt of the device is within a prescribed angle range for a prescribed period of time" such that the user may be viewing the device, "the low power consumption mode is canceled, and the drawing data saved in retention memory is displayed immediately." Ex-1035 ¶20. Figure 3 illustrates different orientations, which are used in determining the correct power mode.

FIG. 3

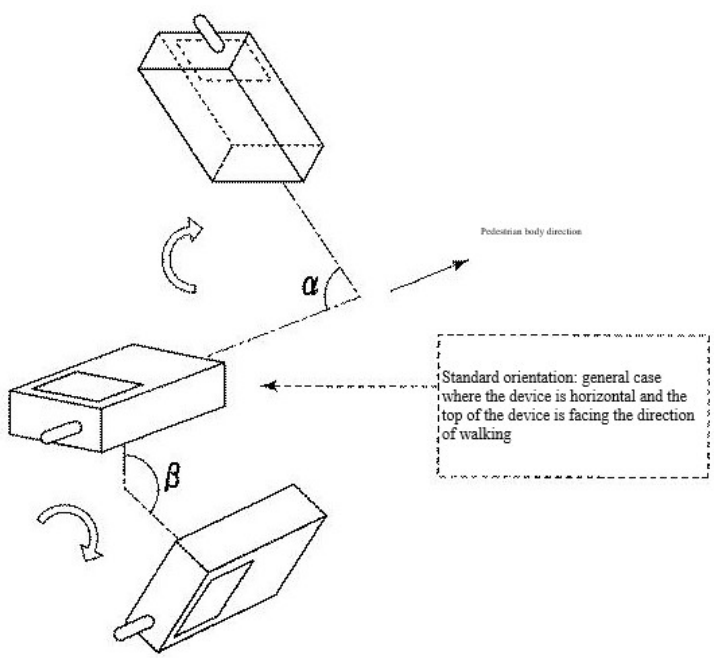

66. Similarly, U.S. Patent No. 7,873,849 ("Mucignat," Ex-1036) discusses switching between various power modes including a "high active power mode," a

"low active power mode," a "sleep power mode," and a "hibernate power mode" based, in part on motion detected by a motion sensor and various time duration requirements. *See* Ex-1036, 8:51-9:5, 12:15-13:40, 15:42-16:19, Figs. 3A-3D. Mucignat explains that "keeping certain device components active" when not needed, "may consume a significant amount of the power available to the device." Ex-1036, 1:30-32. Accordingly, Mucignat discloses an electronic device operable "in various power management modes in order to conserve power during certain situations," such as switching from an active power mode to a sleep power mode when certain device components have not been used and/or certain instructions have not been received within a certain period of time." Ex-1036, 2:65-3:3; 8:519:5. Mucignat explains that certain components, such as a motion sensor may continue to be powered in a low-power mode while other "non-essential power intensive processes" may be disabled to improve battery life." Ex-1036, 3:6-10, 8:59-9:5.

67. Other examples of power mode switching based on particular inputs and movement patterns are described in the sections that follow.

Detecting Movement of Electronic Devices Using Accelerometers

68. A POSITA would have recognized that a similar process, including detecting idle states, could be used for detecting a wide variety of

accelerationbased gestures in a variety of portable electronic devices, including watches containing accelerometers.

69. Patents from around the world filed well before the ’678 Patent’s priority date reflect these facts and describe the use of accelerometers in a variety of electronic devices. For example, Chinese Patent Application Publication No. CN 101458667 (“Zhenghao,” Ex-1037) is directed to “a power management method for a handheld electronic device that uses a gravity sensor (G-sensor) to detect a tilt state of the handheld electronic device to determine whether to enter a power saving mode and thus save power.” Ex-1037 ¶5. Zhenghao’s gravity sensor, a type of accelerometer, “is used to detect a normal vector on a plane of the handheld electronic device” that “includes an x-component, a y-component and a zcomponent.” Ex-1037 ¶¶6-7. In order to determine whether to enter the powersaving mode, Zhenghao teaches that the gravity sensor determines the device is facing downward based on the “z-component of the normal vector [being] negative and the x-component and 7-component of the normal vector both fall[ing] within a specific range.” Ex-1037 ¶8. Figure 2 below illustrates the normal vector components when the electronic device is facing upward and downward.

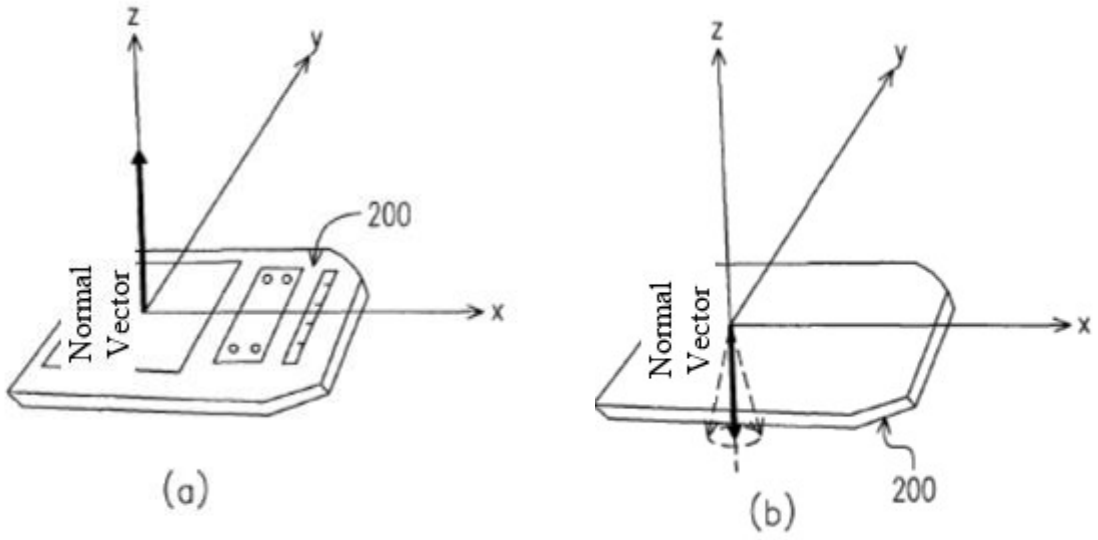

FIG. 2

70. As another example, Mucignat, described above, utilizes inputs from a motion sensor, such as a three-axis accelerometer, in order to determine whether to switch power modes. Ex-1036, 7:23-36. Mucignat explains that to "enhance a user's experience interacting with electronic device 100, the electronic device may provide the user with an ability to generate useful information by moving the electronic device," such that a "motion sensor 112 may detect movement caused by a particular type of user motion event (e.g., a user shaking sensor 112 or a user walking with sensor 112)." Ex-1036, 7:14-21. After detecting movement with the accelerometer, Mucignat discloses that the device "analyze[s] this generated motion sensor data … for determining whether or not to perform a specific device operation based on the distinguished type of user motion (e.g., using rules or settings provided by an application run by processor 102)." Ex-1036, 7:30-36.

Among other functions, the accelerometer data is used in Mucignat to allow the processor to determine whether the device, or certain components of the device, should be placed in lower power modes. Ex-1036, 12:15-13:40, 15:42-16:19.

71. Similarly, U.S. Patent No. 9,122,735 ("Locker," Ex-1038) discloses transitioning an electronic device into an altered power state (e.g., "a state in which the electronic device 200 performs operations related to power savings") based on "accelerometer output." Ex-1038, 6:14-28. Locker discloses that the accelerometer "measures physical acceleration (magnitude and direction), position, and/or shock of the electronic device" and that its output can be used to "determine that the electronic device 200 is in use even if it is not receiving and/or has not received user input for a predetermined period of time." Ex-1038, 5:41-43, 6:57-67.

72. Utilizing motion sensors and interpreting their output to change device functionality was not limited to phones or other, larger, electronic devices at the time of the '678 Patent. Rather, as discussed above, these features were also miniaturized into the watch form factor. For example, Tecchiolli, described above, discloses a watch that is activated or deactivated based on whether it is positioned such as to be in use or not. Ex-1013, 4:28-5:32. Although Tecchiolli does not explicitly disclose an accelerometer, it does teach a "detection circuit 19 [that] comprises two sensors 30 and 31 which respectively detect the inclination of the arm with respect to a substantially vertical axis "z" and the rotation of the wrist of

the user 12, substantially on two axes." Ex-1013, 10:18-26. A POSITA would have understood that an accelerometer is an ideal motion sensor for this type of application.

73. As another example of detecting gestures and motion with a watch, a paper presented at the 15th Annual International Symposium on Wearable Computers describes "AirTouch," a 2011 iteration of a wireless contact free gesture based wrist interface a group of researchers associated with HP Labs and Georgia Institute of Technology had been working on since at least 2007. *See* Ex-1039, 3, 10. This paper describes "Air Touch" as consisting of two parts: "the sensors in a wristwatch UI and a tactile display." Ex-1039, 4. Air touch used proximity sensors "to capture in-air hand gestures between 10-60 cm above the wrist" and required a "trigger gesture" to confirm that these gestures were intentionally input. Ex-1039, 4-5. Figure 5, below, illustrates the process in AirTouch for detecting user interactions:

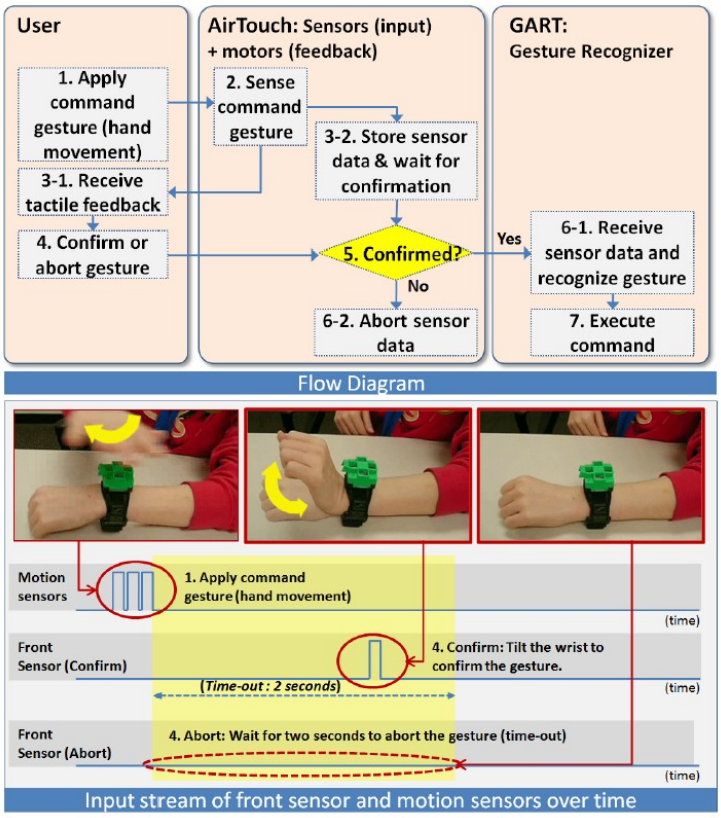

Figure 5. AirTouch interactions.

X. PRIORITY DATE

74. I understand that the earliest possible priority for the ’678 Patent is a Swiss patent application, CH2011/1689, filed on October 18, 2011. I further understand that all prior art references asserted in this petition are U.S. patents or patent publications that were published and/or filed before the earliest possible priority date of the ’678 Patent.

XI. CLAIM CONSTRUCTION

75. Claim 1 recites “***a processor and/or other processing means***” and “using the ***processor and/or other processing means*** for discriminating between

gesture and no gesture." Ex-1001, Claim 1. Similarly, Claim 14 recites "***a processor and/or other processing means***" and "***processor and/or other processing means*** being arranged for discriminating between gesture and no gesture." *Id.*, Claim 14. While I understand that the "means for" language might invoke 35 U.S.C. §112(6), these claims recite a "processor" and "other processing means" in the alternative. Because the prior art applied in this Petition discloses the claimed "processor," it is not necessary to determine whether §112(6) applies to resolve this Petition.

76. Dependent Claim 15 recites "***powering means*** arranged for powering only a first subset of said touch area upon detection of a gesture by said accelerometer, and for powering a larger subset in said second power mode." I understand that this phrasing presumptively invokes 35 U.S.C. §112(6). The recited function is "powering only a first subset of said touch area upon detection of a gesture by said accelerometer, and for powering a larger subset in said second power mode." The closest corresponding structure is described in the specification at column 5:4-13 and 7:49-61. Column 5, lines 4-13 explains:

> FIG. 2 schematically illustrates a possible arrangement and schematic of some components within an embodiment of wristwatch according to the invention….
> The illustrated arrangement comprises ***a power supply 20***, such as a rechargeable battery, ***for supplying power to all other components***.

And Column 7, lines 49-61 explains:

> In one embodiment, the ***wake up signal 230 generated by the inertial sensor 23*** triggers a switch on command of the touch panel 3b and/or

> of the ***touch controller 24 from a low power mode in which nothing is displayed and no finger touch can be detected, to an intermediate power mode where only a subset of electrodes of the touch panel is activated***, for example electrodes in the middle of the touch panel, in order detect finger contact such as taps or double taps in this limited area only and to avoid detection if a tap is made in a different area. In another embodiment, ***the wake up signal 230 triggers a switch on command of the touch controller 24 into a mode where all touch electrodes are activated***, to detect a tap or double tap in any area of the touch panel 3b.

77. Thus, the minimum structure required to perform the recited function is "power supply 20," which supplies power to all of the components, and logic associated with touch controller 24 for powering up only a portion of the touch area and for powering a larger subset, or their equivalents.

78. I do not believe that any additional claim term requires explicit construction to resolve the issues presented in this Petition. I apply the plain and ordinary meaning to each other claim term, as that plain and ordinary meaning would have been understood by a POSITA.

79. I reserve the right to offer opinions on any claim constructions proposed in this proceeding or to offer opinions on additional constructions in the district court.

XII. BRIEF DESCRIPTION OF THE APPLIED PRIOR ART REFERENCES

A. U.S. Patent No. 7,606,552 ("Orr") (Ex-1005)

80. Orr, titled "System and Method for Activating an Electronic Device," was filed on November 10, 2005, and issued on October 20, 2009. I understand Orr qualifies as prior art.

81. Orr is directed to a "system and method for activating an electronic device from a low power state." Ex-1005, Abstract. As shown in Figure 3, Orr's device includes a motion detection subsystem (red), a touch subsystem (yellow), and a microprocessor (orange). *Id.,* 6:41-44, 52-54; 9:32-34. After "a period of inactivity," "it will enter its sleep state." *Id.,* 9:45-48. "[A] two-stage approach is used to re-activate [the] device." *Id*., 6:41-54. While the microprocessor (orange) and touch subsystem (yellow) are in a sleep state, the motion detection subsystem (red) awaits a motion gesture: "trigger circuit 38 is used with motion sensor 32 to detect an initial movement or intent to use device 10." *Id*., 6:45-47. Once that initial motion has been detected, "monitoring circuit 36 [(yellow)] is activated with input device 34 [(touchscreen)] to detect any further indication that the device is meant to be reactivated." *Id.*, 6:49-51. And "[o]nce monitoring circuit 36 [(yellow)] determines that device 10 is meant to be re-activated, it sends a reactivation signal to microprocessor 18." *Id.*, 6:52-54.

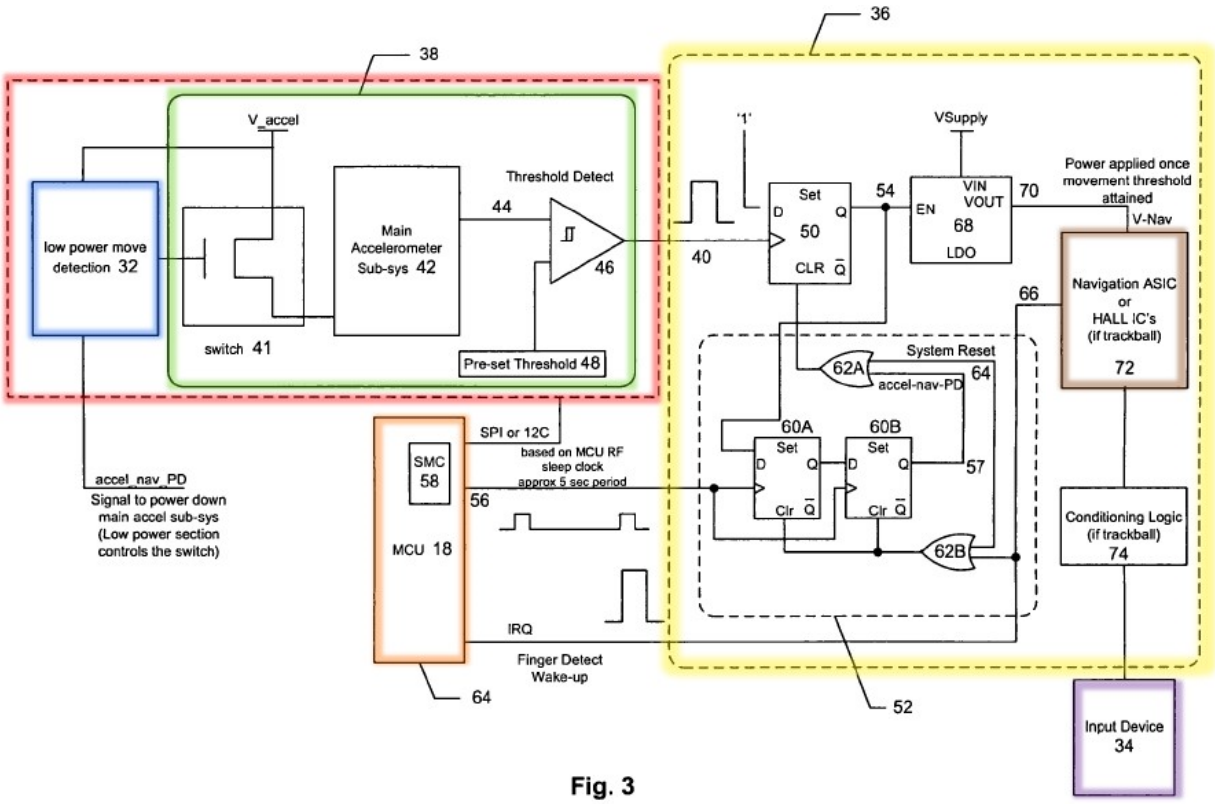

Fig. 3

82. Thus, when motion detection subsystem (red) detects an appropriate motion event, power is applied to navigation ASIC 72 (brown) (*id.*, 11:6-9; Fig. 3), which monitors input device 34 (purple), which may be a touchscreen (*id.*, 9:3234). The touchscreen and touch controller (navigation ASIC 72) then wait for a confirming gesture, and "when … an acceptable signal has been received," navigation ASIC 72 "generates wake-up signal 66," which is sent to "microprocessor 18 which is activated upon the receipt of the wakeup signal 66." *Id.*, 11:49-55.

83. Orr discloses that prior-art power management techniques suffer from "unnecessary re-activations of the microprocessor" due to "[f]alse positives,"

resulting in "draining a significant amount of power." *Id*., 1:32-42. Orr's invention addresses these deficiencies by requiring confirmation of the user's intended input. *Id.*

B. U.S. App. Pub. No. 2010/0194682 ("Orr682") (Ex-1006)

84. Orr682, titled "Method for Tap Detection and For Interacting with a Handheld Electronic Device, and a Handheld Electronic Device Configured Therefor," was filed on January 29, 2010 and published August 5, 2010. Orr682 shares a common lead inventor—Kevin Orr—with the Orr reference. I understand Orr682 qualifies as prior art.

85. Orr682 discloses a "handheld electronic device" and a "method for tap detection" by both the device's "accelerometer" and its "touchscreen." Ex-1006, Abstract, ¶¶24-26, 28-31; *see also id*. ¶¶3-4, 34, 38. Using the accelerometer, Orr682 "measur[es] acceleration," "determine[es] a rate of change of acceleration," and "register[s] a tap input when the rate of change … exceeds a predetermined tap threshold." *Id*. ¶¶24-26, 74-75. As a "tap event will have a higher rate of change of acceleration (e.g., a greater or 'steeper' slope) than other events," "such as, for example, hand gestures or other rapid movements of the … device," "[w]hen the rate of change of acceleration exceeds a predetermined tap threshold," "a tap input is registered." *Id*. ¶¶82-91.

C. U.S. Patent No. 9,019,230 ("Li") (Ex-1007)

86. Li, titled "Capacitive Touchscreen System With Reduced Power Consumption Using Modal Focused Scanning," was filed October 31, 2010 and issued on April 28, 2015. I understand Li qualifies as prior art.

87. Li discloses "a capacitive touchscreen system" with "specific means [and] methods … for reducing the portions of touchscreen that are to be scanned" in order to "reduce power consumption." Ex-1007, Abstract, 13:57-14:29. In one embodiment, "only a fraction of touchscreen 90" is "activated" (e.g., "[d]rive lines outside of the area of interest on touchscreen 90 are turned off, resulting in power savings"). *Id.*, 14:30-53.

D. U.S. App. Pub. No. 2009/0164219 ("Yeung") (Ex-1008)

88. Yeung, titled "Accelerometer-Based Control of Wearable Devices," was filed on December 18, 2008 and published June 25, 2009. I understand Yeung qualifies as prior art.

89. Yeung uses "accelerometer-based orientation and/or movement sensing" "to control … wrist-worn audio recorders and wristwatches." Ex-1008 ¶¶5, 36-37. Yeung discloses a wrist-worn "audio recorder" and electronic wristwatch that includes "a real-time clock, so that the recorder can provide … time-keeping function." *Id*. ¶36.

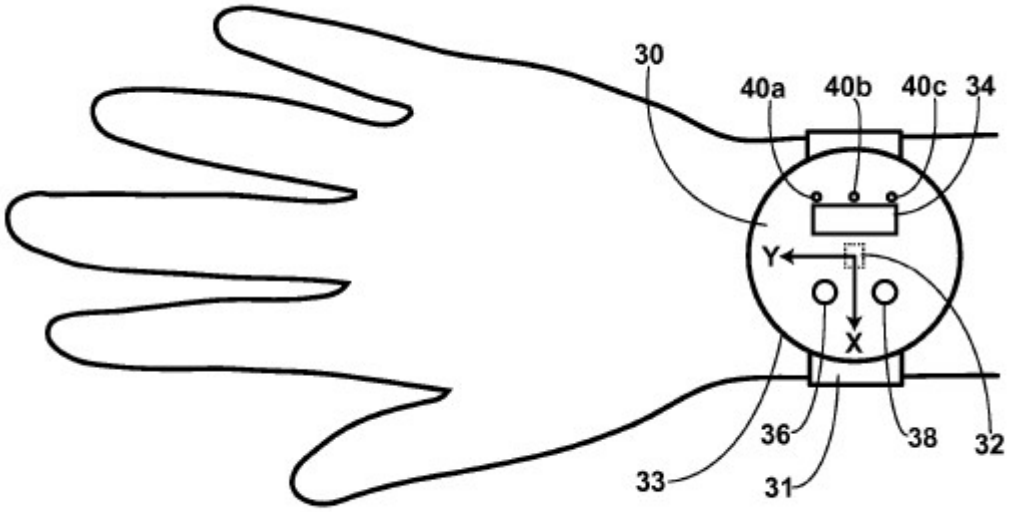

FIG. 1

90. Yeung detects a motion gesture and automatically switches to a higher power mode in which its audio recording function is turned on "only after audio recorder 30 has completed a predetermined movement." *Id.* ¶48. For example, "recorder controller 48 can … detect a predetermined movement, such as the natural movement of lifting the arm upwards from a resting position (i.e., from the side of the body or from in front of the lower end of the torso) and tilting the wrist towards the mouth," *Id*. ¶47, Fig. 6.

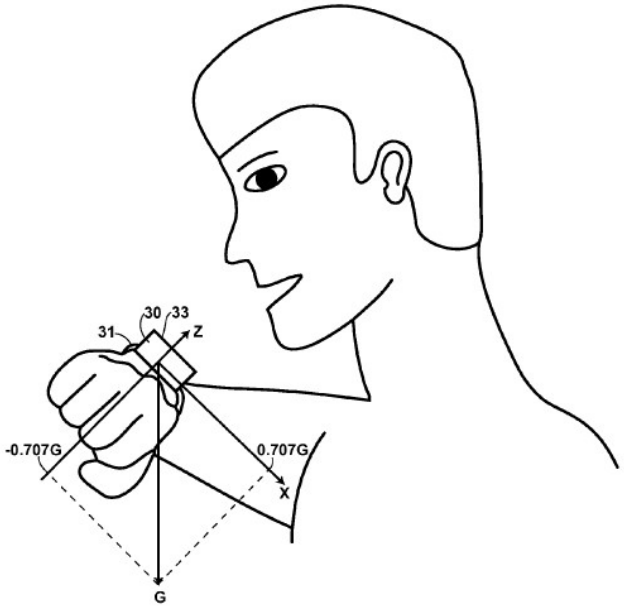

FIG. 6

E. U.S. Patent No. 8,914,075 ("Pasquero") (Ex-1009)

91. Pasquero, titled "Electronic Device Including Actuator and Method of Controlling Same for Providing Tactile Output," was filed on September 17, 2010 and issued December 16, 2014. Pasquero shares a common co-inventor—Steven Fyke—with Orr. Orr, Orr682, and Pasquero were all assigned to the same company—Research in Motion (later BlackBerry). I understand Pasquero qualifies as prior art.

92. Pasquero discloses a "portable electronic device" that "may be in the form of" "a watch" that is "worn at or near the wrist of a user." Ex-1009, 2:29-30, 3:38-50; Figs. 2-3.

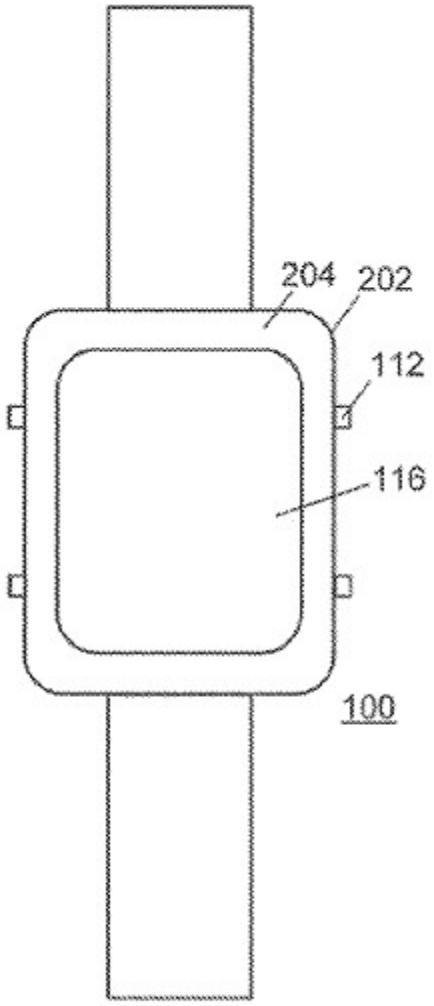

FIG. 2

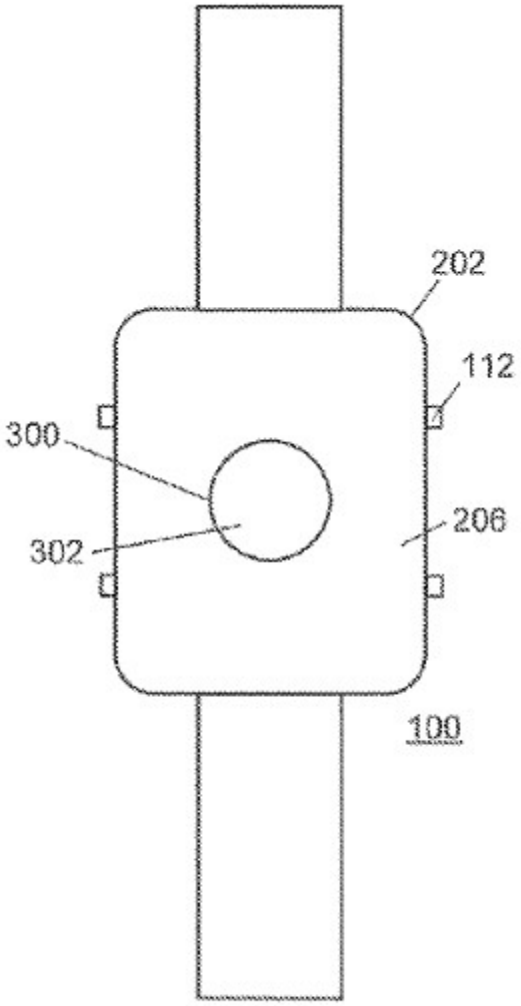

FIG. 3

93. Pasquero's wristwatch includes "touch-sensitive" "display 116," capacitive "touch" "sensors 114," and "accelerometer 113." *Id*., Abstract, 3:23-50, 9:10-38; *see also id*., 7:33-41, 8:10-20. "User interaction with the graphical user interface" is performed "through the buttons 112 and the sensors 114." *Id.*, 2:4660, 5:15-38, 8:10-20. In addition, a motion input such as a "nudge" "may be detected utilizing the accelerometer 113." *Id*., 9:10-38.

XIII. DETAILED EXPLANATION OF THE UNPATENTABILITY GROUNDS

94. The ’678 Patent includes two independent claims—Claims 1 and 14—that are substantially similar in scope but directed to different classes. *See* Ex-1020 (summary table). I address Claim 14 first because it is easier to parse. As I explain below, the challenged claims are disclosed and/or taught by the prior art.

A. Ground 1: Claims 1-5, 7, 10-12, and 14 Are Obvious Over Orr (Ex-1005) In View Of Orr682 (Ex-1006)

1. A POSITA would have been motivated to combine the teachings of Orr and Orr682, and would have had a reasonable expectation of success in doing so.

95. In my opinion, a POSITA would have been motivated to combine the teachings of Orr and Orr682 and would have had a reasonable expectation of success in doing so, because each relates to the same technologies, names a common lead inventor, Kevin Orr, and was assigned to the same company, Research in Motion (maker of BlackBerry products). Both relate to gesture detection in portable electronic devices using accelerometers and touchscreens. *See, e.g.*, Ex-1005, 9:2-7 (accelerometer subsystem gesture detection), 11:11-18 (touchscreen gesture detection); Ex-1006 ¶91 (accelerometer gesture detection); ¶28 (touchscreen gesture detection). And Orr and Orr682 provide compatible solutions for reducing power consumption in electronic devices. Ex-1005, Abstract, 1:32-42, 6:32-54; Ex-1006, Abstract, ¶¶3-4, 80-91. The proposed combination improves Orr in four aspects.

96. First, Orr discloses "a two-stage approach … to re-activate [the] device" involving the accelerometer's detecting a gesture input followed by the touch panel's confirming the user's intended input. Ex-1005, 6:44-50. Orr682 teaches specific methods for "tap detection" using an accelerometer processor that include determining a direction and "rate of change of acceleration" (i.e., "slope" of the acceleration signal) and "registering a tap input when the rate of change … exceeds a predetermined tap threshold." Ex-1006 ¶¶24, 83, 106. Orr682 explains that the accelerometer processor consists of a Motion detection subsystem 249 (FIG. 2) that is elaborated on in FIG. 6. *Id.* [0011].

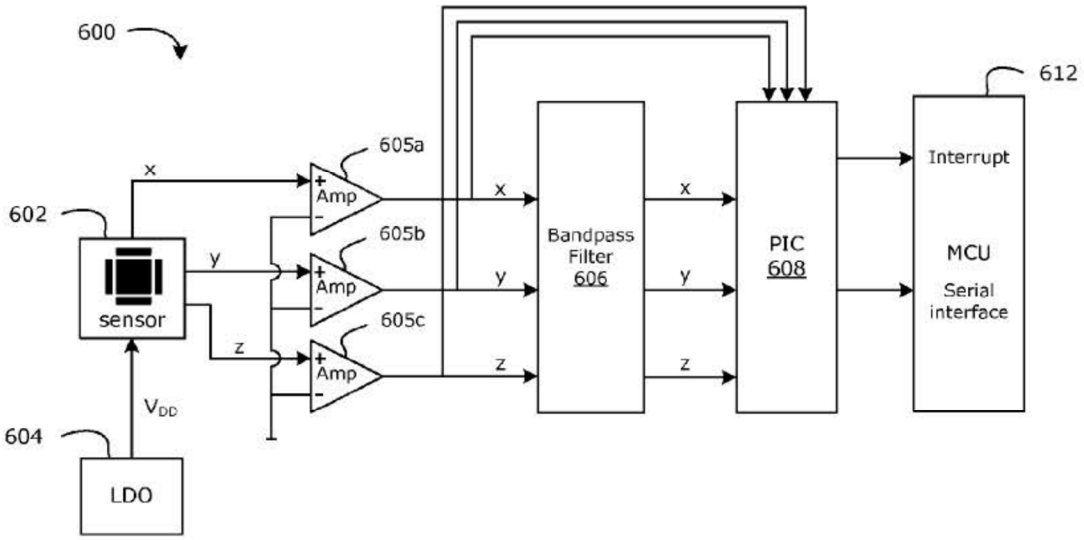

FIG. 6

"The circuit 600 comprises a three-axis analog accelerometer 602 having the outputs of each of three-axes connected to Amp 605a, Amp 605b and Amp 605c

(referred to as Amps 605 collectively).' *Id.* [0126]. "The output of the Amps 605 is connected to a bandpass filter 606. The bandpass filter 606 has three outputs corresponding to each of the measured axes of the accelerometer 602. The outputs of the bandpass filter 606 are connected to a **Programmable Interface Controller (PIC) 608** with a built-in ADC. In other embodiments, the PIC 608 could be replaced with a 3-input MUX followed by an ADC. **The PIC 608 may be implemented using any suitable microprocessor** having a built-in ADC and sufficient sampling rate." *Id.* [0127] (emphasis added). In my opinion, it would have been obvious to a POSITA that the output of an accelerometer could have been processed by dedicated hardware or through software running on a processor. Either approach would have been well-known and suitable and the choice as to which to use would be a straightforward matter of considering the trade-offs behind each approach. For example, a software-based approach would be more flexible, easier to implement for more complicated algorithms, and much easier to upgrade. This understanding is supported by a 2002 article from Texas Instruments titled "Choosing the Right Architecture for Real-Time Signal Processing Designs" (https://www.ti.com/lit/wp/spra879/spra879.pdf), Ex-1050, that shows in Table 1 that using an MCU for designers of real-time applications was a well-known option and would be "Excellent" in terms of Time to Market, Price, and Feature Flexibility.

TEXAS INSTRUMENTS SPRA879

Table 1. Decision Table for Designers of Real-Time Applications

	Time to Market	Performance	Price	Development Ease	Power	Feature Flexibility	Summary
ASIC	Poor	Excellent	Excellent	Fair	Good	Poor	Fair
ASSP	Fair	Excellent	Good	Fair	Excellent	Poor	Good
Configurable	Poor	Excellent	Good	Poor	Good	Fair	Fair
DSP	Excellent	Excellent	Good	Excellent	Excellent	Excellent	Excellent
FPGA	Good	Excellent	Poor	Excellent	Poor	Good	Fair
MCU	Excellent	Fair	Excellent	Good	Fair	Excellent	Good
RISC	Good	Good	Fair	Good	Fair	Excellent	Good

The architectural considerations are listed on the left side of the table. The criteria used to evaluate these various options are listed along the top, according to importance of the criteria and the effectiveness of individual choices in meeting them.

Following is an in-depth discussion of each of these signal processing alternatives and how they address the issues of today's developer.

Between 2002 and 2011, in my opinion, the value of using processor-based signal processing solutions generally increased due to lower cost and growth of options in the marketplace. Orr682's accelerometer processor also further improves the "accuracy of tap detection" by analyzing the "duration of each of the positive and negative peaks [of the acceleration signal], the duration of the peaks, and possibly the duration between the peaks," i.e., the frequency of the acceleration signal. *Id.* ¶84. Orr682's methods "increase the accuracy" and "reduc[e] erroneous tap inputs." *Id.* ¶89. In my opinion, a POSITA would have been motivated to enhance Orr's accelerometer and inertial sensor processor to include Orr682's accelerometer processing capabilities of measuring a direction, slope (including amplitude), and frequency of the acceleration signal (Ex-1006 ¶24) in order to more reliably detect a tap gesture with the accelerometer and avoid "unnecessary

re-activations of the microprocessor" due to "[f]alse positives" (Ex-1005, 1:32-42, 6:41-54). For example, tapping on a device having an accelerometer will create an acceleration profile different from that created by simply moving the device up and down rapidly because of the quick impulse that a finger tap will impart to the device. Being able to measure the acceleration profile, such as the rate of change of acceleration, allows for better discrimination between tap gestures and other gestures that might be performed unintentionally.

97. Second, once Orr detects a tap using the accelerometer processor, it wakes up a "touchscreen" ("input device 34"), which can "detect movement of a finger of the user across its sensor." Ex-1005, 9:21-24, 9:33-39. This touch screen detected gesture is used to "provide[] a further check for activation inputs" to validate that the initial input detected by the accelerometer was intentional, though Orr does not specifically state this touchscreen gesture may be a tap. *Id.*, 9:21-26. However, Orr682 also discloses a touchscreen and a touchscreen controller that "receiv[es] touch inputs" from the "surface of the touchscreen" ***to detect taps***. Ex-1006 ¶¶28-29. In my opinion, a POSITA would have been motivated to modify Orr's touchscreen controller to detect a tap on the touchscreen surface, which would have provided additional safeguards against a misidentified gesture that might otherwise wake up the device's microprocessor unnecessarily. In other words, Orr682 considers both the signature of a tap measured by a touchscreen

(i.e., a touch event and release event as measured by a touchscreen) and the signature of a tap as measured by an accelerometer, which can measure the intensity and directionality of the tap event. Ex-1006 ¶¶28-29, 37. Thus, in my opinion, a POSITA would have recognized that improving Orr's touch detection with Orr682's teachings would result in more robust gesture detection, less likely to result in false positive wake-up events that would waste battery capacity.

98. Third, Orr describes a "display 14" and an "input device 34" and states that the "input device 34" "can be a … touchscreen." Ex-1005, 9:32-34. In my opinion, a POSITA would have understood that in such a case, "display 14" would have been implement as a touch-sensitive display such that "display 14" and "input device 34" are combined as a single unit, i.e., a touchscreen display. However, Orr does not describe the structure of its touchscreen display 14/34. On the other hand, Orr682's touchscreen is implemented as "an electrode layer sandwiched between a glass member and a transparent protective cover sheet on which the touch-sensitive input surface 108 is located." Ex-1006 ¶43. In my opinion, a POSITA would have recognized that Orr682's transparent protective cover sheet could have been implemented as a glass layer. Indeed, using a glass layer to cover a touchscreen was well-known in the art, as was implementing such cover sheets as a glass layer. For example, U.S. Pat. App. Pub. No. 2006/0097991 ("Hotelling") discloses "touch screen 134" sandwiched between "glass member

138" and "glass" "protective cover sheet 140" to protect the display from forces exerted on the touchscreen. Ex-1016 ¶¶71-72 ("The touch screen 134 also includes a protective cover sheet 140 disposed over the electrode layer 136. The electrode layer 136 is therefore sandwiched between the glass member 138 and the protective cover sheet 140. The protective sheet 140 serves to protect the under layers and provide a surface for allowing an object to slide thereon …. The protective cover sheet 140 may be formed from any suitable clear material such as glass…"). Likewise, Fitzgerald discloses a watch having a "color LCD display" with "a glass overlay." Ex-1010, 3:63-66. Such glass layers protect the underlying circuitry, provide a smooth surface on which a user can perform touch gestures, and protects the screen against scratches, which may impair visibility of the display. Indeed, in my opinion, a POSITA would have understood that glass was more scratch-resistant than other protective cover sheet options, such as plastic or acrylic. In my opinion, a POSITA would have been motivated to implement Orr's touchscreen display according to Orr682's teachings because a POSITA would have understood that touchscreens routinely comprise a protective cover glass on which a user can perform touch gestures in order to protect the system's components from the elements.

99. Fourth, Orr teaches waking a microprocessor from a sleep state after detecting a gesture on the touchscreen. Ex-1005, 9:27-31. Orr682 also discloses a

microprocessor ("processor 240 of the device") and notes that "detection of a touch event … and/or determining the location of the touch event … may be performed by either the controller of the touchscreen display 106 or the processor 240 of the device 102." Ex-1006 ¶49. In other words, once Orr682's microprocessor is awake, it can perform gesture detection from the touchscreen inputs independently of the touch controller. In my opinion, a POSITA would have been motivated to enhance Orr's microprocessor programming with the touch-processing software of Orr682 to enable the microprocessor to detect touch gestures independently of the touch controller because this would allow more flexibility in the type and complexity of gestures that could be detected by the system once fully powered up. In particular, because Orr's touchscreen controller must detect certain gestures before the microprocessor is awakened, it should operate at a low power and detect only a limited number of gestures. But once the system is fully awake, a more capable system, in which software on the microprocessor could recognize a large variety of gestures, would be advantageous. Indeed, this is consistent with Orr's disclosure of its touch controller ("navigation ASIC 72") as an "ASIC"—an "Application Specific Integrated Circuit"—which is generally a hardware processor specifically configured for a certain application, whereas microprocessors, on the other hand, are generally programmable with software and allow for further flexibility. For example, it would be advantageous from a power-consumption viewpoint to enable

the touchscreen and touch controller to recognize only a subset of gestures, such as taps, double taps, and other simple interactions that are likely to be the gestures that would signal a broader wake-up of the entire device. Once awakened fully, it would be advantageous for the microprocessor to be able to recognize more complex gestures, such as pinches, zooms, rotations, etc. This would also have the advantage of being able to configure the more complex gestures using software running on the microprocessor, which would allow for more flexibility in defining the types of gestures that could be supported.

100. Thus, the combined system of Orr-Orr682 would include (1) Orr's accelerometer and inertial sensor processor enhanced to detect a direction, slope (including amplitude), and frequency of acceleration, as disclosed by Orr682's accelerometer processor; (2) Orr's touch controller enhanced to detect tap gestures at the touchscreen, as disclosed in Orr682; (3) Orr's touchscreen implemented underneath a cover glass such that user gestures are performed (and detected) on the cover glass, as disclosed by Orr682; and (4) Orr's microprocessor enhanced with the capability of detecting touchscreen gestures independently of the touch controller, as disclosed by Orr682.

101. In my opinion, modifying Orr to include these Orr682 features would have been a straightforward engineering task for a POSITA as both Orr and Orr682 disclose standard mobile computing devices that are capable of detecting gestures.

Indeed, both Orr and Orr682 disclose general purpose computing devices that work in the same general way and that, in my opinion, a POSITA would have understood were capable of using the same and/or similar programming languages and/or operating systems. Accordingly, in my opinion, a POSITA would have had a reasonable expectation of success in implementing the approaches described in Orr682 into Orr's system as the implementation would have been a matter of using familiar elements and thus would have yielded predictable results. For example, both Orr and Orr682 disclose the use of well-known accelerometers and accompanying processors, touch panels, touch controllers, and microcontrollers; using such components to detect and determine input gestures; and controlling such components and their input-gesture-detection mechanisms via software in order to reduce false inputs, all on a general purpose computing device. In my opinion, implementing each of these disclosures was well within the skills of a POSITA.

102. Furthermore, in my opinion, a POSITA would have had a reasonable expectation of success in combining the teachings of Orr and Orr682, as both patent publications are by the same inventor and assigned to the same company. Moreover, each purports to solve problems relevant to portable electronic devices in similar and predictable ways. For example, Orr teaches a "two-stage approach" involving added confirmation for input gesture detection, and Orr682 teaches a

method to discriminate a purposeful tap from a false input using features inherent to a tap gesture. Ex-1005, 6:32-54; Ex-1006 ¶¶24-26, 28-31, 82-91. In my opinion, a POSITA would have understood that the teachings of Orr and Orr682 could have been combined with no change in the respective functions, as Orr and Orr682 teach compatible systems.

2. Independent Claim 14

a. Element 14[pre]: A wristwatch which can be operated in a plurality of power modes including a first power mode and a second power mode, comprising:

103. It is my opinion that Orr in view of Orr682 ("Orr-Orr682") teaches the preamble of Claim 14, to the extent that the preamble is limiting.

104. Although Orr does not expressly disclose a wristwatch, it would have been obvious to implement Orr on a wristwatch. Orr is directed to an electronic device that is "optimally" "lightweight, compact and [has] long battery life." Ex1005, 1:20-22. Its design is "based on construction design and functionality of other electronic devices, such as smart telephones, desktop computers pagers or laptops having telephony equipment." *Id.*, 3:44-48. While an exemplary embodiment of an electronic device that is a small handheld device is shown in Figure 1, Orr's teachings are equally applicable to a device that is worn on the wrist.

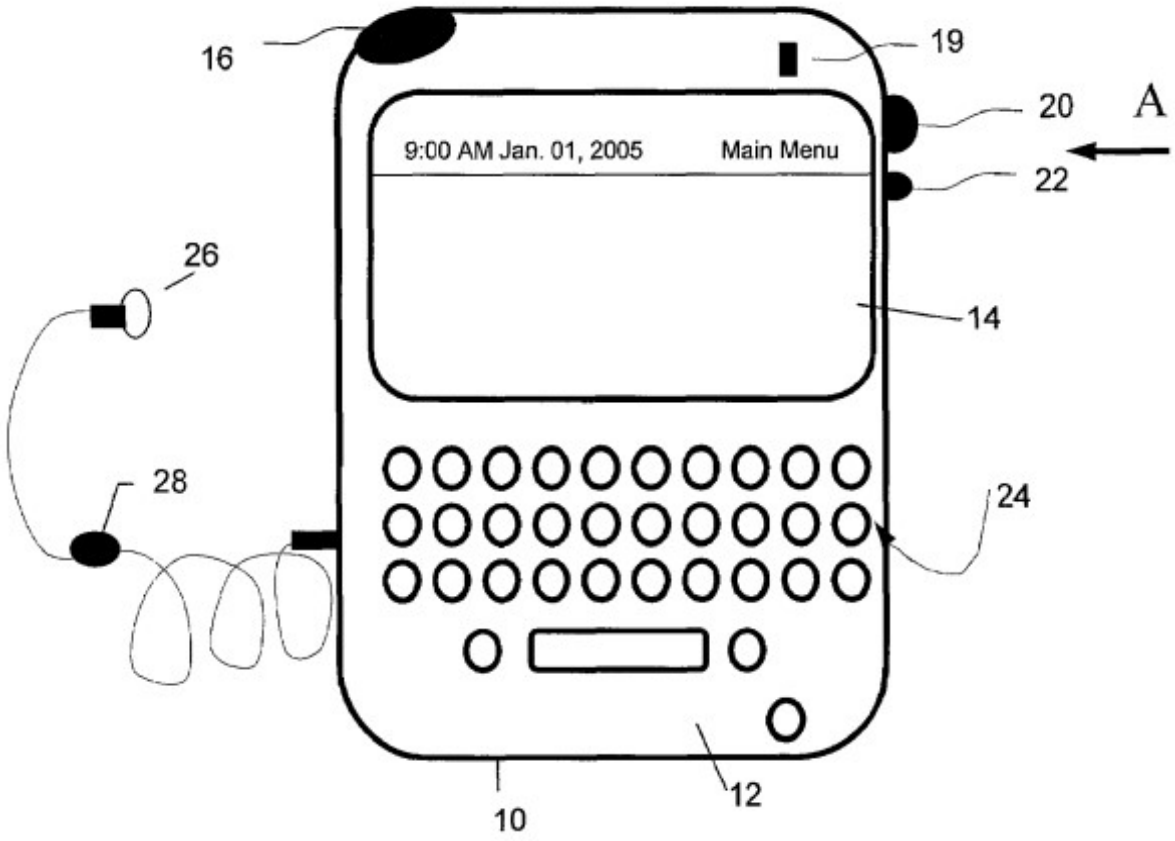

Fig. 1

105. In fact, in my opinion, a POSITA would have recognized that PDAs and smartphones, such as described in Orr, could be made wrist-wearable with the attachment of an adjustable strap, rendering them essentially indistinguishable from a wristwatch, and would have been motivated to do so to make for a convenient way to view the device without having to hold it in hand. For example, U.S. Pat. App. Pub. No. 2006/0236014 ("Yin") discloses "a PDA worn on the wrist of a user" "by attaching the PDA 12 to a wrist band 36," as shown in Figure 3.

Ex1024 ¶¶6, 20, Fig. 3. ZCover Universal Armband discloses a band that allows a user to attach his electronic device (e.g., smartphone, PDA) to his wrist, as shown in the figure further below. Ex-1025. Accordingly, in my opinion, a POSITA would have understood that it was well-known that any small electronic device, including those that could tell time, could be attached to a user's wrist.

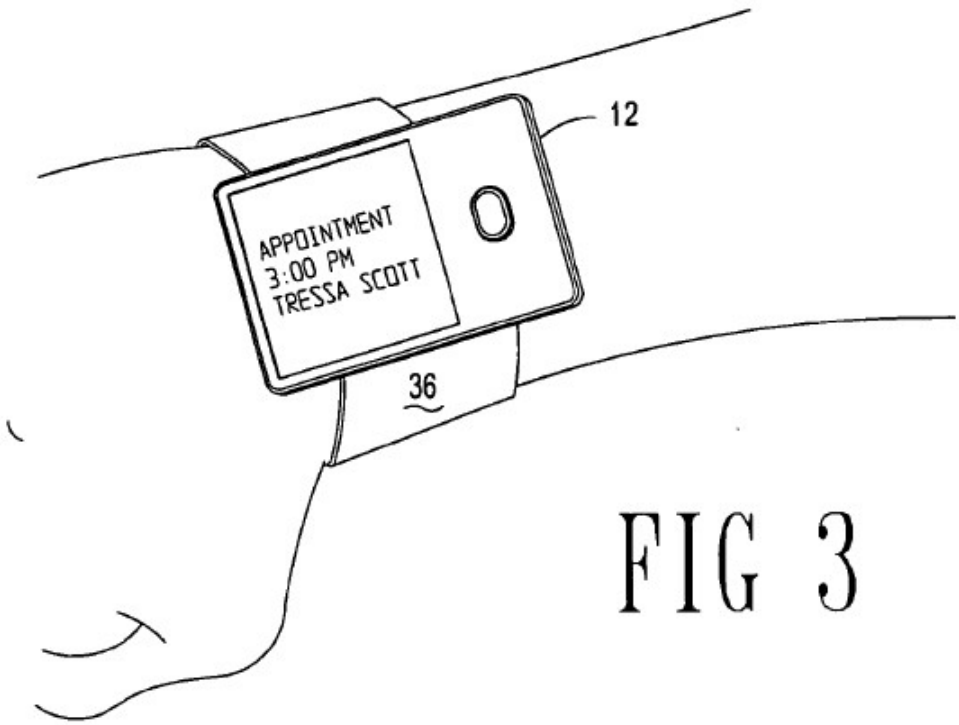

Ex-1024, Fig. 3.

Ex-1025

106. Although not required by the claim, in my opinion, a POSITA would have further recognized that a wrist-wearable PDA, such as the kind described in Orr, could be further scaled to the size and form of a typical wristwatch. *See, e.g.*, Ex-1030, Ex-1031; *see also supra* ¶¶49-73. Wristwatches having multiple power modes, motion detectors/accelerometers, and/or touchscreen displays were wellknown in the art at the time the ’678 Patent was filed, including several listed on the fact of the Orr patent, indicating that Orr or the Examiner found them to be relevant to Orr’s disclosure. For example, U.S. Application Publication No. 2005/0212911 (“Marvit911”) discloses a wristwatch comprising an accelerometer (Ex-1014 ¶¶34-35, 43, 166) and U.S. Application Publication No. 2005/0216867 (“Marvit867”) discloses a wristwatch comprising an accelerometer and

touchscreen (Ex-1023 ¶¶34-35, 42-53, 166). Other references similarly show watches with touchscreens and/or accelerometers were well known. For example, Yeung discloses a wristwatch that uses an accelerometer to switch between multiple power modes (Ex-1008 ¶¶5, 37, 47-48); Pasquero, which shares a coinventor with Orr, discloses a wristwatch that uses an accelerometer and/or a touch panel to receive user input (Ex-1009, 9:10-38); Fitzgerald discloses a wristwatch with a touchscreen that uses an accelerometer to switch between multiple power modes (Ex-1010, 2:66-3:2, 3:18-27, 7:8-26, 11:28-46); U.S. Application Publication No. 2011/0083100 ("Fyke") discloses a wristwatch comprising a touch panel (Ex-1011 ¶¶23, 66); U.S. Pat. App. Pub. No. 2008/0168368 ("Louch") discloses a wristwatch with a touchscreen interface (Ex-1012 ¶49, Fig. 1F); Tecchiolli discloses a wrist-worn electronic device that uses a motion detector to switch between multiple power modes (Ex-1013, 1:4-10, 2:12-13, 9:27-10:5); and U.S. Patent No. 7,301,528 ("Marvit528") discloses a wristwatch comprising an accelerometer and touchscreen (Ex-1015, Abstract, 1:34-62).

107. Moreover, wristwatches incorporating cellular telephony (as described by Orr (Ex-1005, 3:59-61)), were well-known in the art and, in my opinion, implementing such features of Orr in a wristwatch form factor would not have presented any obstacle. For example, by 1999, Samsung had introduced the

SPHWP10, a "smartphone and a watch in one" that "could last for 90 minutes of talk time and 60 hours on standby," as shown below. Ex-1021.

Image of Samsung SPH-WP10.

108. In 2009, Samsung released its S9110, its second "phone/watch hybrid," as shown below. *Id.* The S9110 could last for "more than four hours" of "talk time" and "had both a touch screen and physical buttons." *Id.*

Image of Samsung S9110.

109. LG debuted its GD910 "smartwatch phone," shown below, at CES 2008, which it released in 2009. *Id.* The GD910 featured a tempered glass" "diagonal screen," "voice recognition," and "text to speech." *Id.*

Image of LG GD910.

110. Moreover, for example, Cho discloses a "watch phone" comprising a "watch mode" in which the device's "touch screen panel" is "turn[ed] off" and an "idle mode" in which the "touch screen panel" is "turn[ed] on" (Ex-1017, Abstract); U.S. Application Publication No. 2010/0146463 ("Chiang") discloses a "watch-like cell phone," to be "fit[] … to a user's wrists," and to "display[] time" and "cell phone … information" (Ex-1018, Abstract); and U.S. Application Publication No. 2007/0211042 ("Kim") discloses a "wristwatch" "communication terminal" (Ex-1019 ¶¶19, 22-27).

111. In my opinion, applying Orr's teachings to a wristwatch format would have been well within the capabilities of a POSITA and would have been a matter of ordinary engineering and not the product of innovation. Indeed, in my opinion, a POSITA would have understood that the components described in Orr (e.g.,

display, accelerometer, inertial sensor processor, touch panel, touch controller, microprocessor) were all off-the shelf components, available in watch-size form factors, used according to their well-known functions.

112. Orr-Orr682 also discloses a plurality of power modes including a first power mode and a second power mode. Orr discloses a "system and method" for switching its electronic device from a "low power state" (Orr's "sleep mode") to a "higher power state" or "normal operating mode" (when Orr has powered up the touch panel and/or the microprocessor into a "higher power" mode). Ex-1005, Abstract, 1:4-10; *see also id.*, 6:15-31 ("device 10 can cycle through a normal operating mode to a low-power mode and back to a normal operating mode"). In Orr's "'sleep' mode," "components" are "selectively de-activate[d]" (e.g., the "display" "may be turned off") "and/or place[d] … into a lower power consumption mode" (e.g., "microprocessor" "may be placed in a 'slow clock' mode") "to conserve power consumption of the devices." *Id.*, 1:22-28, 6:15-31. The device "can subsequently be re-activated into the normal power or higherpower mode" (i.e., second power mode) when an "event" "detected by" the device's "electronic sensors" triggers "a re-activation signal." Id., 1:22-28, 6:1531.

b. Element 14[A]: a display;

113. It is my opinion that Orr-Orr682 discloses Element 14[A].

114. Orr discloses a display. As I discussed above, Orr's "display 14" may be touch sensitive such that Orr's "input device 34" is implement as the "display 14." See Ex-1005, 9:32-37. Orr discloses that "a received signal" (e.g., "a text message or web page download") "is provided as an input to microprocessor;" "microprocessor" "then further processe[s]" the "received signal" and "then ***generate[s] an output to display 14.***" Ex-1005, 5:38-51, Figs. 1-2.

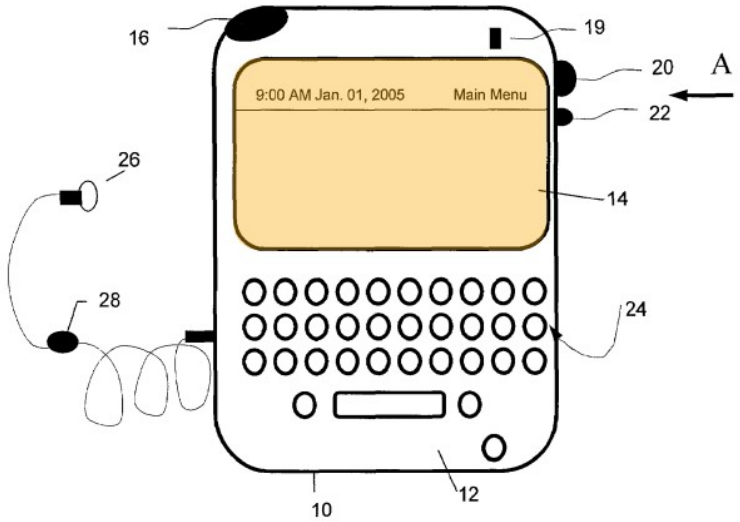

Fig. 1

c. Element 14[B]: a microcontroller;

115. It is my opinion that Orr-Orr682 discloses Element 14[B].

116. The '678 Patent uses the terms "microprocessor" and "microcontroller" interchangeably when referring to element 21 in Figure 2. *See* Ex-1001, 7:66 ("microcontroller 21"), 8:37 ("microprocessor 21"). Accordingly, in my opinion, for purposes of these claims, a POSITA would have understood the

terms "microprocessor" and "microcontroller" to be referring to roughly the same device. Indeed, in my opinion, a POSITA would have understood that both microprocessors and microcontrollers generally have comparable core processors, but a microcontroller may also have some built-in memory and input/output functions integrated onto the same chip.

117. Orr discloses a microcontroller. As shown in Figure 2, Orr discloses "microprocessor 18" to "control[] the … overall operation of the device 10" and "to control and receive almost all data, transmissions, inputs and outputs related to [the] device." Ex-1005, 4:6-26, Fig. 2; *see also id.*, 4:49-67 ("Microprocessor 18, in addition to its operating system functions, enables execution of software applications on device 10."), 4:40-48 (discussing "[o]perating system software executed by the microprocessor").

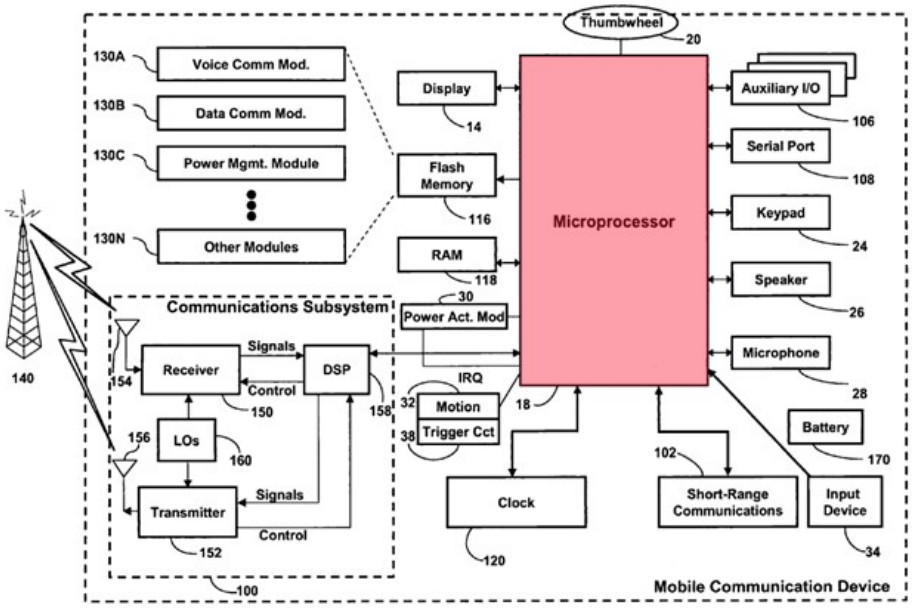

Fig. 2

d. Element 14[C]: a touch panel underneath a cover glass of said wristwatch for detecting a gesture on said cover glass;

118. It is my opinion that Orr-Orr682 teaches Element 14[C].

119. Orr-Orr682 teaches a touch panel underneath a cover glass for detecting a gesture on said cover glass. Orr teaches a "touchscreen" "input device 34" (i.e., touch panel) that "detect[s] an[] … indication that the device is meant to be reactivated" (Ex-1005, 9:21-43, 11:6-20), where "***a specific gesture signal may be required***." Ex-1005, 6:45-51, 8:64-65. Orr682 teaches such touchscreens comprising "an electrode layer sandwiched between a glass member and a transparent protective cover sheet on which the touch-sensitive input surface 108 is located." Ex-1006 ¶43. In my opinion, a POSITA would have recognized that such protective cover sheets were typically made from glass, particularly as glass is more scratch-resistant than other protective cover sheet options, such as plastic or acrylic. *See, e.g.*, Ex-1016 ¶¶71-72 (disclosing "touch screen 134" sandwiched between "glass member 138" and "glass" "protective cover sheet 140"). And, in my opinion, a POSITA would have been motivated to apply Orr682's teachings to Orr's system, such that the combined system comprises Orr's touchscreen input device 34 (i.e., touch panel) implemented underneath a cover glass for detecting a gesture on said cover glass, as taught in Orr682 (Ex-1006 ¶43), and would have had a reasonable expectation of success in doing so, for the reasons I discussed

above. Indeed, in my opinion, a POSITA would have understood that a cover glass was routinely used as the top layer of a touchscreen to provide a smooth surface, particularly for user input (e.g., a gesture), and to protect the circuitry underneath. Using a glass layer to cover a touchscreen was well-known in the art. For example, as I discussed in paragraph 98, Hotelling discloses a glass touch screen—"touch screen 134" sandwiched between "glass member 138" and "glass" "protective cover sheet 140"—to protect the display from forces exerted on the touchscreen. Ex-1016 ¶¶71-72. Likewise, Fitzgerald discloses a watch having a "color LCD display" with "a glass overlay." Ex-1010, 3:63-66. Such glass layers protect the underlying circuitry, provide a smooth surface on which a user can perform touch gestures, and protect the screen against scratches, which may impair visibility of the display.

e. Element 14[D]: a touch controller for interpreting touch signal provided by the touch panel and for converting said signals into command signal;

120. It is my opinion that Orr-Orr682 discloses Element 14[D].

121. Orr discloses a touch controller for interpreting touch signals provided by the touch panel and for converting said signals into command signals. As shown in Figure 3, Orr's "navigation circuit 72" (brown) (i.e., touch controller) "receives signals generated by" "touchscreen" "input device 34" (purple) (i.e., touch panel) "and has logical circuits … which evaluates the

signals" (i.e., interprets the touch signals from the touch panel). Ex-1005, 6:45-51, 11:6-20.

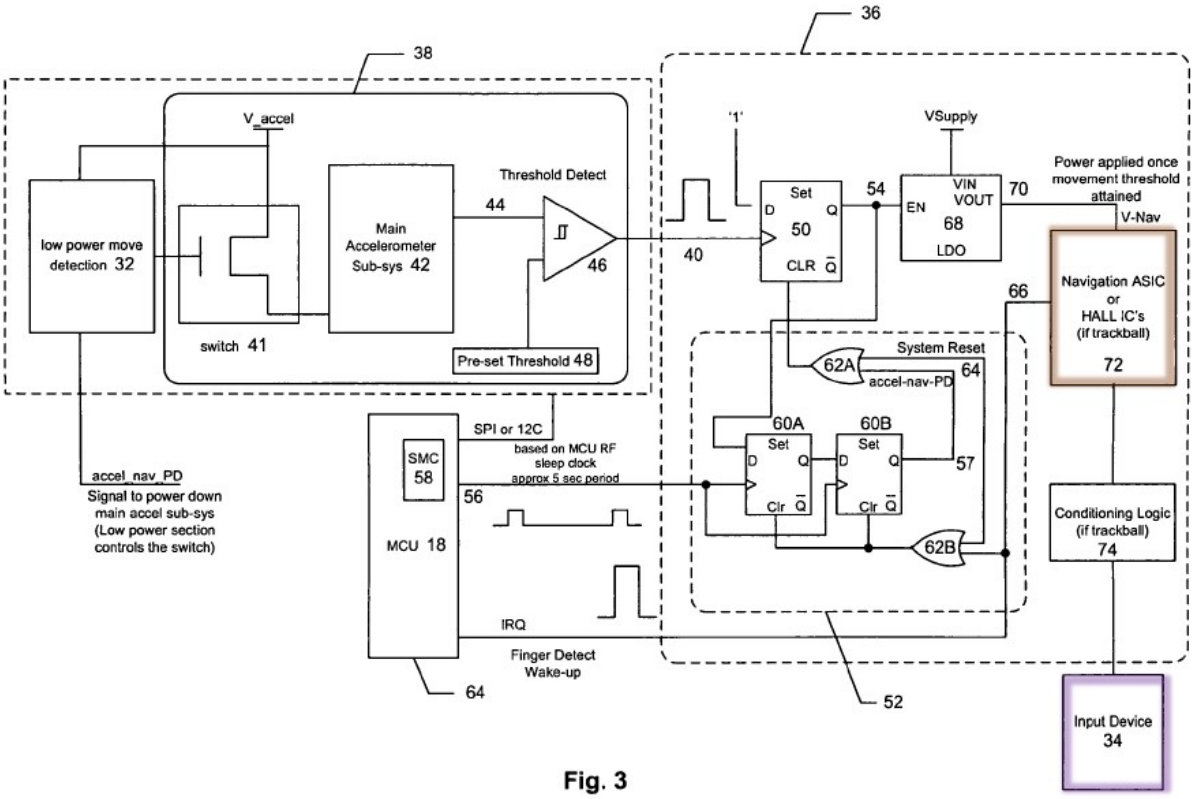

Fig. 3

The "navigation circuit 72" (i.e., touch controller) "may evaluate the signals and may require them to be of a certain direction, force, duration, speed or any combination of those characteristics" in order to ***convert*** the touch signal into a "re-activation signal" to ***command*** "the device 10 … to be reactivated." Ex-1005, 6:45-51 (discussing monitoring circuit 36, which comprises navigation circuit 72), 11:6-20 (same). Thus, the "re-activation signal" is the claimed "command signal."

f. Element 14[E]: [1] an inertial sensor comprising an accelerometer and a processor and/or other processing means, [2] said accelerometer being arranged for generating an acceleration signal and [3]

the processor and/or other processing means being arranged for discriminating between gesture and no gesture based on a direction of said acceleration signal as measured by said accelerometer being a three dimensional accelerometer, and [4] on a slope or frequency of said acceleration signal, [5] while the microcontroller and the touch controller are in a sleep power mode;

122. It is my opinion that Orr-Orr682 teaches Element 14[E].

(1) Inertial sensor comprising an accelerometer and a processor and/or other processing means

123. Orr discloses an inertial sensor comprising an accelerometer and a processor. Orr's Figure 3 discloses a "motion sensor circuit" (red) (i.e., inertial sensor) comprising (1) "motion sensor 32" (blue), which may be "a low-g MEMs (micro-electromechanical system) accelerometer" (Ex-1005, 6:55-7:2), and (2) "trigger circuit 38" (green) comprising "main sub-system 42." Ex-1005, 6:55-7:2; *see also id*., 7:18-36, 7:59-65. Orr's trigger circuit 38 comprising main sub-system 42 is an inertial sensor ***processor*** because it detects a "specific gesture," "such as a quick 'snap' movement in a certain direction," "detects each component of the gesture," and "analyze[s]" "each component … to determine whether the gesture has been properly formed."[3] Ex-1005, 8:64-9:7. To the extent that Orr does not

[3] Indeed, trigger circuit 38 including sub-system 42 must be a processor that can perform such analysis and processing because it is performed while both touch controller ("navigation ASIC 72") and "microprocessor 18" are in a low-power sleep state, as I discuss below for this claim element.

disclose an inertial sensor processor, it would have been obvious to use the disclosure of Orr682's software-based accelerometer processor 600 in place of Orr's trigger circuit 38. for the reasons described in ¶96.

124. In my opinion, a POSITA would have understood that Orr discloses an embodiment in which "each component" of a "gesture" "is analyzed" at "trigger circuit 38" comprising "main sub-system 42" "to determine whether the gesture has been properly formed (Ex-1005, 8:64-9:7). *See* Ex-1005 6:41-44 ("Turning now to FIG. 3, power activation module 30 comprises two main sections: (1) trigger circuit 38 for use with motion sensor 32; and (2) monitoring circuit 36 for use with input device 34."), 6:55-9:20 (discussing "trigger circuit 38 for use with motion sensor 32," including "sensor 32 and/or sub-system 42 detects each component of the gesture, and each component is analyzed to determine whether the gesture has been properly formed"), 9:21-24 ("The second section of circuit 30 provides a further check for activation inputs from additional devices. The second section includes monitoring circuit 36 which interfaces with device 34."), 9:2112:15 (discussing "monitoring circuit 36 for use with input device 34"). As Orr describes "trigger circuit 38" comprising "main sub-system 42" as "detect[ing]" and "analyzing" "each component of [a] gesture" and using that information "to determine whether [a] gesture has been properly formed," in my opinion, a

POSITA would have understood "trigger circuit 38" comprising "main sub-system 42" to be a "processor" of the inertial sensor. In my opinion, a POSITA would have understood that an accelerometer circuit and subsystem that can "detect each component of the gesture" and that can analyze each component "to determine whether the gesture has been properly formed" may involve software running on a processor for performing such detections of accelerometer data to reconstruct the gesture performed to cause such accelerations. Alternatively, in my opinion, a POSITA would have understood that such gesture detections could have been hard coded into a hardware processor (such as an ASIC) specifically configured to detect certain predefined gestures and/or based on the disclosure of Orr682's software-based accelerometer processor 600 in place of Orr's trigger circuit 38. for the reasons described in ¶96. Such an implementation would be less flexible than a software system and more difficult to expand to detect a wider variety of gestures. But such a hardware processor might use less power for gesture detection. But, in any case, in my opinion, a POSITA would have understood that the "trigger circuit 38" comprising "main sub-system 42" disclosed in Orr would include a processor, especially because Orr teaches that the touch controller and main microprocessor are in a sleep state when the initial accelerometer gesture is detected and thus could not be used for that initial gesture detection. Indeed, in my opinion, as a POSITA would have understood that such gesture detection would require a processor, and

as Orr discloses that its other processors (i.e., its microcontroller and its touch controller) are in a sleep state at this first stage in the device reactivation process, a POSITA would have understood that the "trigger circuit 38" comprising "main sub-system 42" is a "processor" of the inertial sensor. In fact, in my opinion, a POSITA would have understood that "trigger circuit 38" comprising "main sub-system 42" being a "processor" of the inertial sensor was a motivating factor for Orr's further managing the device's power consumption by only activating "main-subsystem 42" as necessary. *See, e.g.*, Ex-1005, 7:3-8 ("In FIG. 3, for trigger circuit 38, when accelerometer (also noted by reference number 32) is moved, e.g. by a movement of device 10, the output signal generated by accelerometer 32 is provided to switch 41. If the signal is sufficient to activate switch 41, a power signal from switch 41 is provided to main sub-system 42 to activate it.").

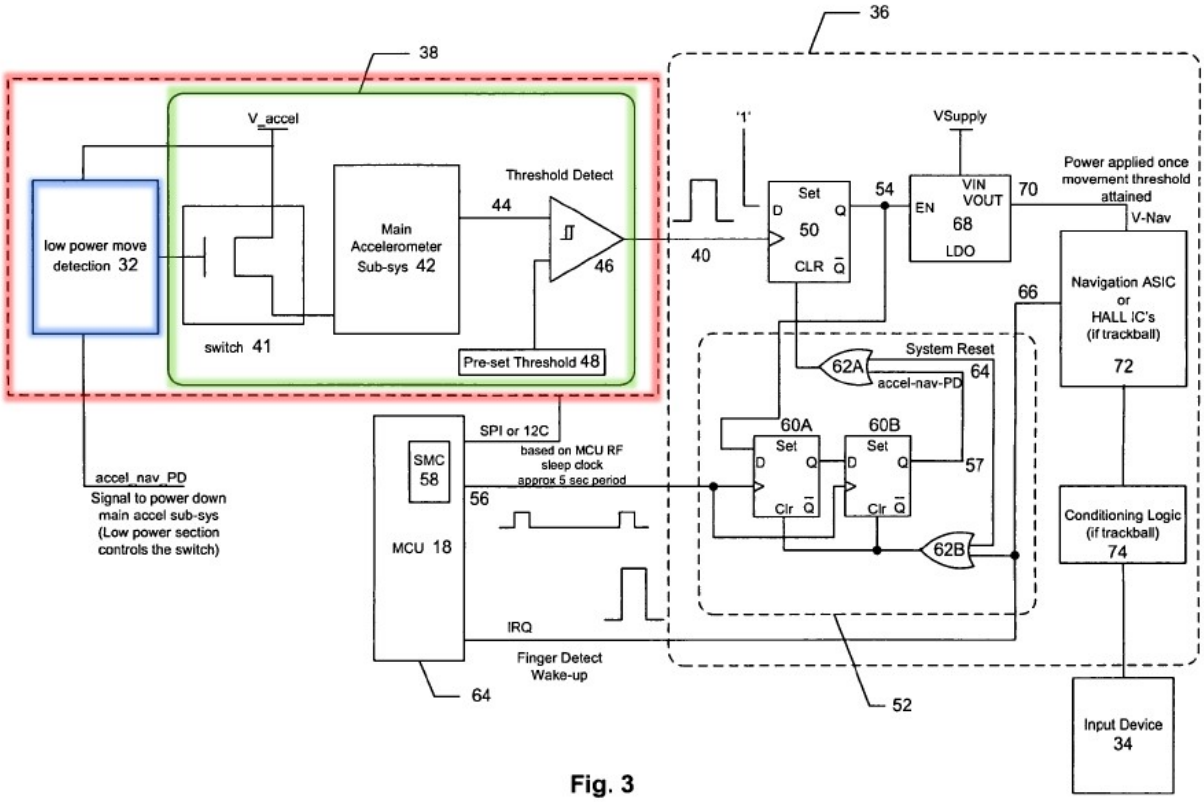

Fig. 3

(2) Accelerometer arranged for generating an acceleration signal

125. Orr discloses an accelerometer arranged for generating an acceleration signal. Orr's accelerometer 32 can "***sense and convert an acceleration*** detected from a motion (e.g. tilt, inertial, or vibration) or gravity ***into an electrical signal*** (producing a corresponding change in output)." Ex-1005, 6:55-7:2; *see also id.*, 6:32-54 (discussing "signals received from motion sensor 32"), 7:3-17 (discussing "the output signal generated by accelerometer 32"), 8:25-40 (describing accelerometer 32 producing a range of values representing all detected up and down movements), 8:64-9:7 (describing accelerometer 32, along with sub-system 42, detecting each component of a gesture).

(3) Processor arranged for discriminating between gesture and no gesture based on a direction of the said acceleration signal as measured by said accelerometer being a three dimensional accelerometer

126. Orr's inertial sensor processor ("trigger circuit 38" comprising "main sub-system 42") discriminates between gesture and no gesture based on the acceleration signal. "As the gesture is being executed by a user with device 10 in hand, sensor 32 and/or sub-system 42 detects each component of the gesture, and ***each component is analyzed to determine whether the gesture has been properly formed***." Ex-1005, 9:2-6. In fact, a "specific gesture detected by sensor 32 and/or sub-system 42 may be required," "such as a quick 'snap' movement in a certain direction of device 10 or the movement of device 10 in a clockwise circular pattern." *Id.*, 8:64-9:7; *see also id.*, 6:55-7:2, 7:3-17, 8:25-40. In my opinion, a POSITA would have understood that a processor that can analyze each component of a movement to determine "whether the gesture has been properly formed" would be discriminating between a gesture and no gesture based on the acceleration signals from the accelerometer.

127. Orr-Orr682 teaches the inertial sensor processor is arranged for discriminating between gesture and no gesture based on a direction of the acceleration signal. In my opinion, a POSITA would have been motivated to enhance Orr's three-axis accelerometer and inertial sensor processor with Orr682's

capability of determining the direction of an acceleration signal, and would have had a reasonable expectation of success in doing so, for the reasons I discussed above.

128. Orr teaches a three-axis accelerometer. Orr682 discloses analyzing an acceleration signal in all three axes to determine its direction. Ex-1006 ¶¶¶83 (measuring "***forward*** acceleration" or "***backward*** acceleration"), 106 ("when a tap occurs all three axes of a 3-axis accelerometer measure a response").

129. Orr's accelerometer is a "***three axis***" "***accelerometer***," such as "a LIS3L02AQ ***tri-axis*** analog ***accelerometer***, available from STMicroelectronics," that can "sense and convert an acceleration detected from a motion (e.g. tilt, inertial, or vibration) or gravity into an electrical signal (producing a corresponding change in output)." Ex-1005, 6:55-7:2; *see also id*., 6:32-54, 7:3-17, 8:25-40, 8:649:7; *see also* Ex-1022.

(4) [Discriminating between gesture and no gesture based] on a slope or frequency of the acceleration signal

130. Orr-Orr682 teaches the inertial sensor processor is arranged for discriminating between gesture and no gesture on a slope or frequency of the acceleration signal. In my opinion, a POSITA would have been motivated to enhance Orr's three-axis accelerometer and inertial sensor processor with Orr682's capability of determining the direction, slope, and frequency of an acceleration

signal, and would have had a reasonable expectation of success in doing so, for the reasons I discussed above.

131. Orr682 calculates a "rate of change of acceleration" or "***slope*** (i.e., rise/fall per unit time)" of the acceleration signal. *Id.* ¶90. "A tap event will have a higher rate of change of acceleration (e.g., a greater or 'steeper' ***slope***) than other events such as, for example, hand gestures or other rapid movements." *Id.* ¶91. And "***when the rate of change of acceleration***" (i.e., slope) (Figure 16, step 1606) "exceeds a predetermined tap threshold," "a tap input is registered" (Figure 16, step 1608). *Id.* ¶95, Fig. 16; *see also id.*, Abstract, ¶¶41, 53, 77, 105-108, 126.

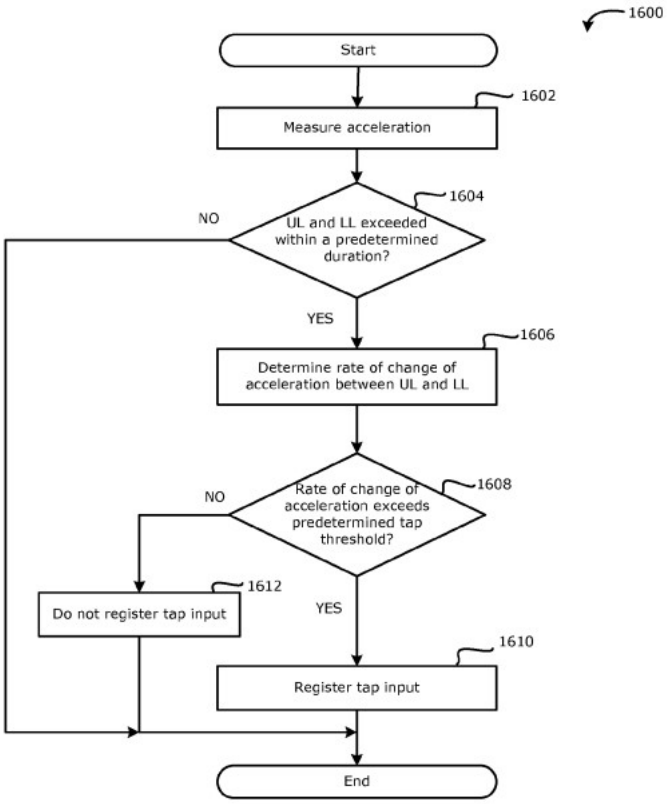

FIG. 16

132. Although only a "slope" or "frequency" is required by the claim, Orr682 also determines a frequency of acceleration. The '678 Patent notes that tap signals have a high frequency characterized by "a pulse function with a first step of fast increase of the acceleration almost immediately followed by a step of fast deceleration, the duration of the whole pulse being typically in the range of 10 to 20 ms." Ex-1001, 6:35-43. Orr682 measures these frequency-characterizing parameters of the acceleration pulse, as described with reference to Figure 7, which illustrates a "tap response" of the accelerometer. Ex-1006 ¶83, Fig. 7. The tap

response exhibits two narrow peaks 702 and 704, and Orr682 measures the "duration of the time that the accelerometer output is above the upper limit," or Δt_1; the "duration of the time that the accelerometer output is below the lower limit," or Δt_2; and the "difference between the start time … and end time" of the accelerometer pulses, denoted $t_{1,1}$, $t_{1,2}$, $t_{2,1}$, and $t_{2,2}$. *Id.* ¶85.

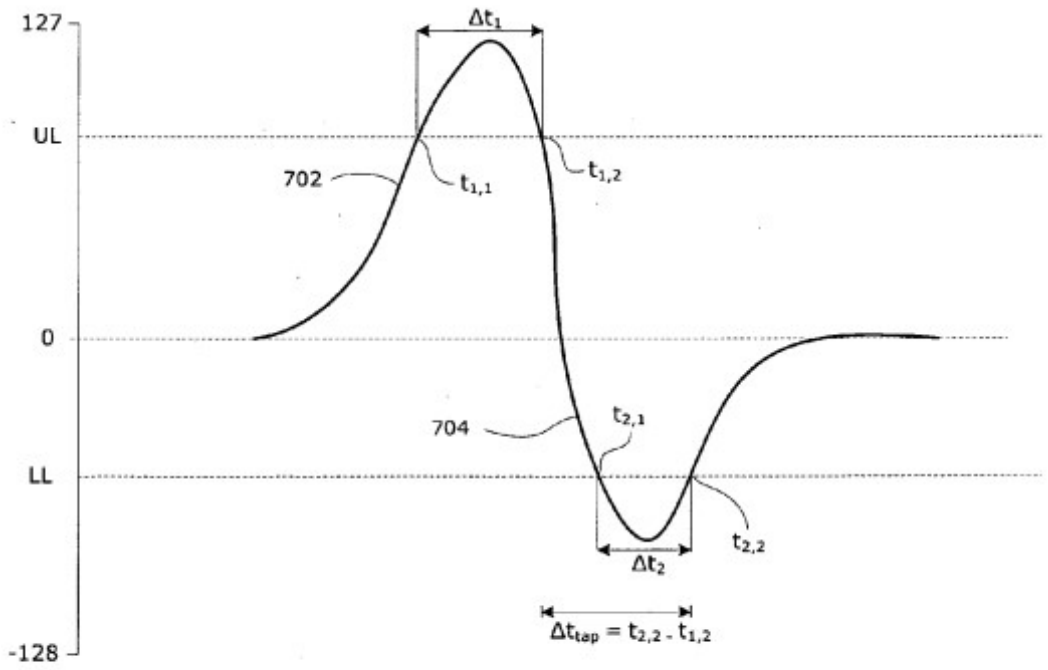

FIG. 7

Orr682 makes such measurements because the "accuracy of tap detection" "can be further improved by analysing the duration of each of the positive and negative peaks, the duration of the peaks, and possibly the duration between the peaks." *Id.* ¶¶84-85. Orr682's processor "determines that a tap … has occurred when the interrupt signals corresponding to the upper and lower threshold are received within a predetermined duration of each other." Ex-1006 ¶86. In other words,

Orr682 uses the frequency of the acceleration signal as characterized by its quick rise and fall and overall duration (just as taught in the ’678 Patent) to detect a tap gesture.

(5) While microcontroller and touch controller are in a sleep power mode

133. Orr’s “motion sensor circuit,” including accelerometer and inertial sensor processor (trigger circuit 38 comprising sub-system 42) (outlined in red in Figure 3, above), detects the initial wake-up gesture—“an initial movement or intent to use device 10”—while the microcontroller and touch controller are in a sleep power mode. *See* Ex-1005, 6:45-47. Figure 3 states that power is applied to navigation ASIC 72 (i.e., touch controller) only ***after*** this initial movement has been detected. *Id.*, Fig. 3 (excerpt) (“power applied once movement threshold attained), 10:57-11:9 (ASIC 72 is “activated by output signal 70” once “trigger signal 54” has been generated based on the accelerometer output).

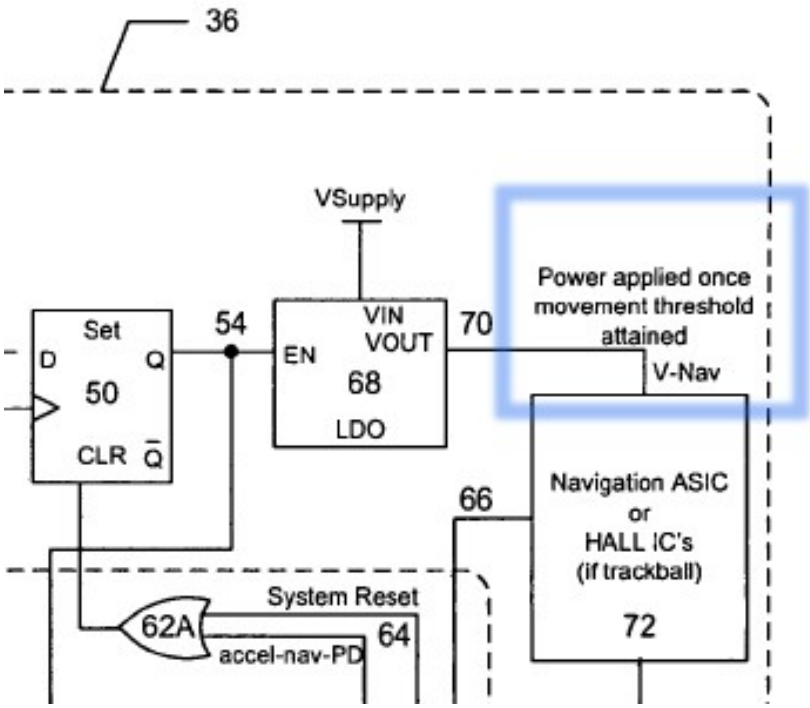

As I explain in more detail below, in my opinion, a POSITA would have recognized that the activation of the touch controller ("navigation ASIC 72") based upon accelerometer output indicates that the touch controller was in a "sleep power mode" when the accelerometer input was received. *See id.,* Fig. 3, 10:57-11:9. Next, the touch panel and touch controller wait for a touch input confirming that the user intended to reactivate the device, as I discuss below in paragraphs 137-141, and a "re-activation signal" is then set to microprocessor 18. Ex-1005, 6:5254. As I explain further below, in my opinion, a POSITA would have recognized that the activation of the microcontroller ("microprocessor 18") ***after*** receipt of touch sensor output indicates that the microcontroller was also in a "sleep power mode"

when both the accelerometer input and the touch input were received. *See id.*, 6:52-54.

134. Orr illustrates this two-step wake-up process in Figure 5, below. In states 502-508 (in blue), both the touchscreen and microprocessor are in lowpower sleep states. The touchscreen is not awakened until state 510 (in red), and the microprocessor is not awakened until state 512 (in green). Ex-1005, 12:28-64, Fig. 5.

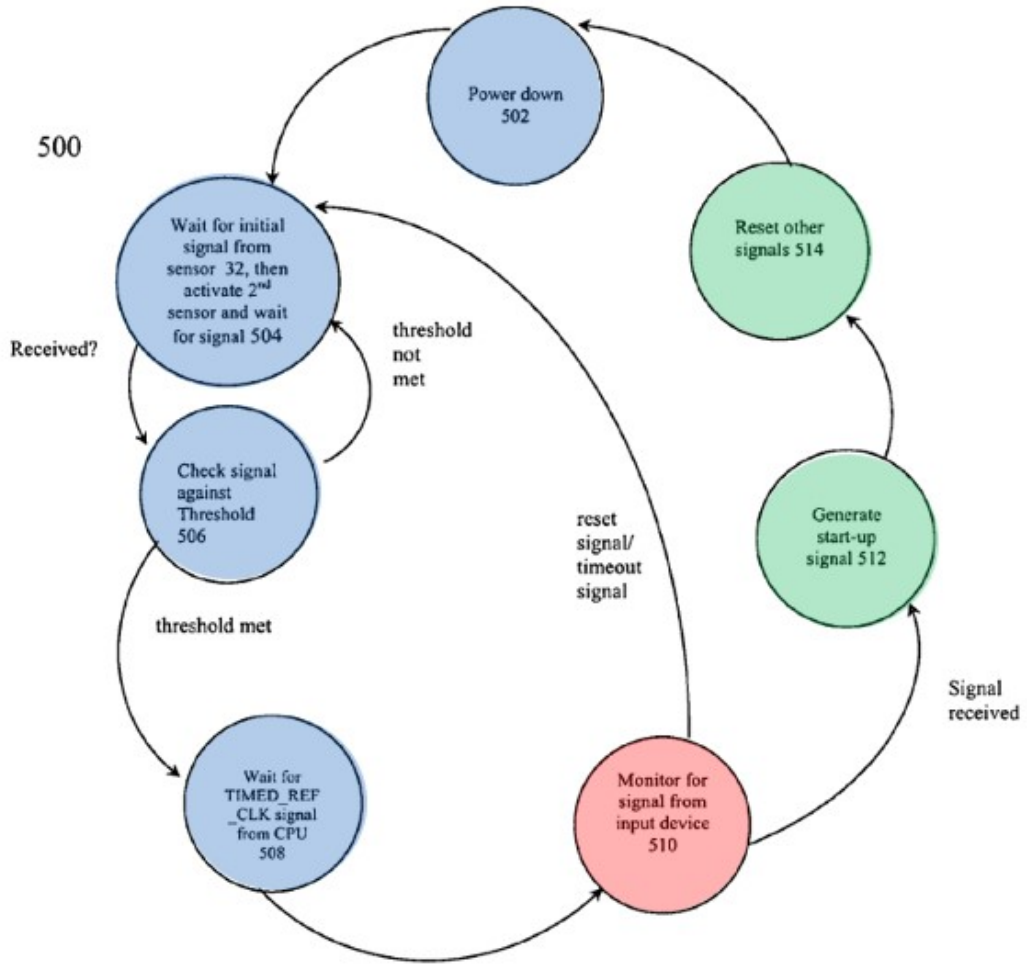

Fig. 5

135. Specifically, "Initial state 502" (also called "Power down 502" in Figure 5 above) corresponds with the device entering a "low power mode," which, for "microprocessor 18," may comprise "a 'slow clock' mode, wherein the clocking signal for the microprocessor is slowed" ("causing device 10 to operate slower and conserve battery power"). Ex-1005, 6:15-31, 12:28-64. In this lowerpower state, navigation ASIC 72 (i.e., touch controller) is also powered down

and only "activat[ed] by signal TIMED_REF_CLK." *Id.* 11:30-38. In my opinion, a POSITA would have understood these low power states to be a sleep power mode.

136. Accordingly, in at least "Initial state 502" (or "power down state 502") and "Wait for Signal from Sensor state 504," the microcontroller and the touch controller are in a sleep power mode. *Id.*, 12:28-64. In "Wait for Signal from Sensor state 504," Orr's "motion sensor circuit" (i.e., an inertial sensor comprising an accelerometer and a processor) seeks to "detect an initial movement or intent to use [the] device." Ex-1005, 6:32-54, 12:28-64. A "specific gesture detected by sensor 32" (i.e., an accelerometer) "may be required," "such as a quick 'snap' movement in a certain direction of device 10 or the movement of device 10 in a clockwise circular pattern." *Id.*, 8:64-9:7; *see also id.*, 6:55-7:2, 7:3-17, 8:25-40. In other words, in Figure 5's "Wait for Signal from Sensor state 504," the system "monitors for any initial trigger signal from sensor 32" (e.g., the accelerometer). Ex-1005, 6:32-54, 12:28-64, Fig. 5. Accordingly, Orr discloses the accelerometer being arranged for generating an acceleration signal and the processor being arranged for discriminating between gesture and no gesture while the microcontroller and touch controller are in a sleep power mode.

g. Element 14[F]: wherein touch controller is commanded so as to be switched to said second power mode upon gesture detection by said inertial sensor

and for detecting a tap gesture on the cover glass with the touch panel; and

137. It is my opinion that Orr-Orr682 teaches Element 14[F].

138. Orr discloses that its inertial sensor detects a gesture and, accordingly, commands the activation of its touch controller. In Orr's "two-stage approach … to re-activate" the device, "[f]irst," "motion sensor circuit" (i.e., inertial sensor) "detect[s] an initial movement or intent to use [the] device;" then, "input device 34" (i.e., touch panel and touch controller) "is activated" (i.e., switched to a second power mode) "to detect any further indication that the device is meant to be reactivated." Ex-1005, 6:32-54. Indeed, as shown in Figure 3, "power is applied to navigation ASIC 72" (i.e., touch controller) "once movement threshold [has been] attained." *Id*., Fig. 3 (excerpt).

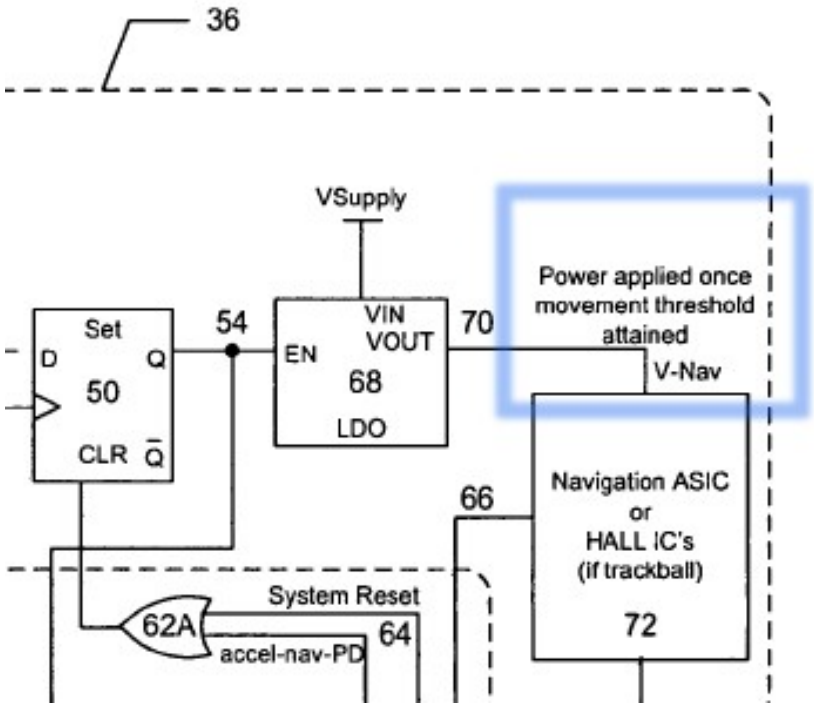

139. Determining whether the accelerometer gesture is valid is reflected in states 504 and 506 of Figure 5 below. When a valid gesture is detected, the system transitions to state 508, where it waits for a TIMED_REF_CLK signal, which "selectively activate[s] navigation circuit 72" (*id.*, 11:30-38) and then "moves to state 510, the main monitoring state." *Id.*, 12:41-44. In state 510, the system waits for "receipt of a signal from input device 34" (i.e., touch panel). *Id.,* 12:43-46. Thus, state 510 is "for detecting a tap gesture on the cover glass with the touch panel," as recited in the claim.

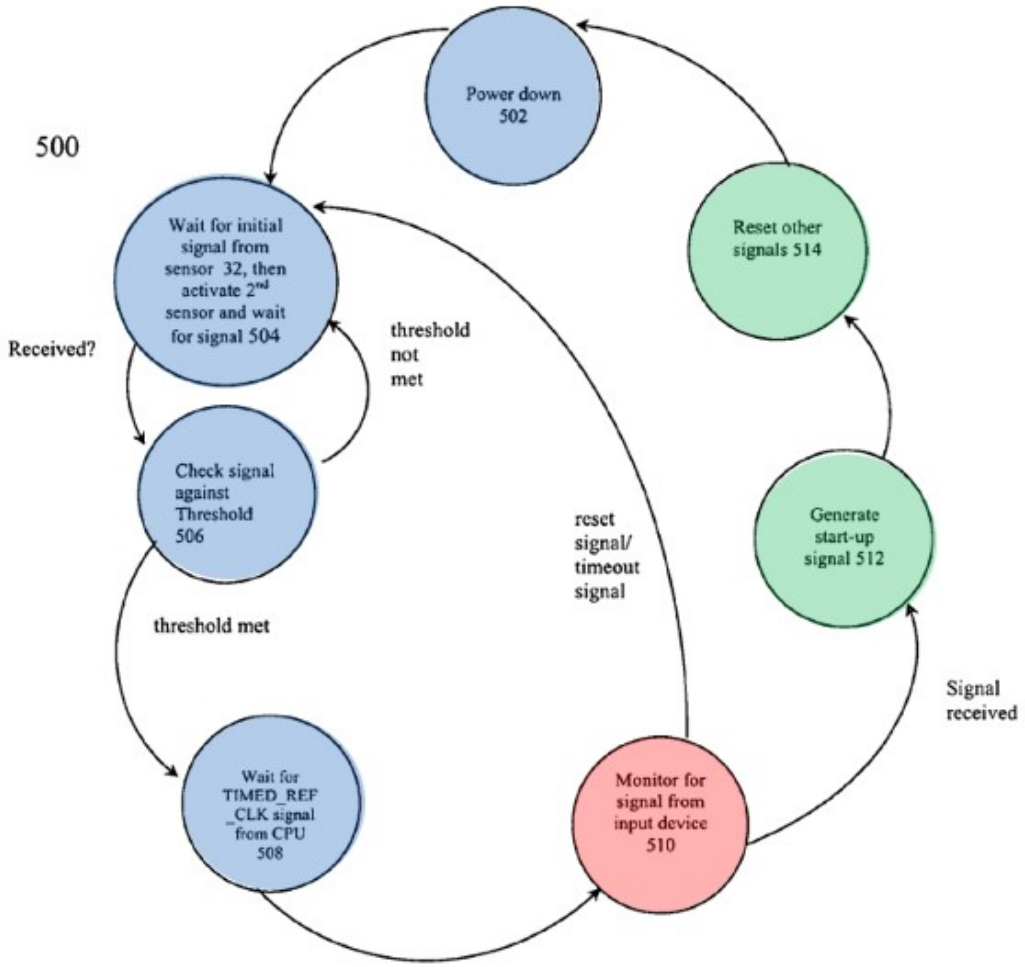

Fig. 5

140. Specifically, the "signal from input device 34" disclosed in Orr may be from a tap gesture on the cover glass. Orr discloses that its "touchscreen" "input device 34" (i.e., touch panel) and "navigation ASIC" (i.e., touch controller) "***detect any further indication that the device is meant to be reactivated***" (Ex-1005, 6:3254), where "***a specific gesture … may be required***." Ex-1005, 8:64-9:7 (describing a "snap" gesture), 11:6-20 (describing a circular gesture). In the

context of the touchscreen input device, Orr682 teaches that this "specific gesture" can be a tap gesture on the cover glass. Orr682 discloses "tap detection" by the device's "touchscreen." Ex-1006, Abstract, ¶¶24-26, 28-31. The "controller of the touchscreen" detects a tap via "receiv[ing] touch inputs resulting from the application of a strike force to [the] input surface of the touchscreen." *Id.*, Abstract, ¶¶28-31, 37, 44, 49, 80. And as I discussed above, Orr682's "touchscreen[] comprise[s] an electrode layer sandwiched between a glass member and a transparent protective cover sheet," which, in my opinion, a POSITA would have understood to be a glass layer, "on which the touch-sensitive input surface 108 is located." *See id.* ¶43. So the tap gesture would be detected on the cover glass of the touch panel.

141. In my opinion, a POSITA would have been motivated to enhance Orr's touchscreen input device (i.e., touch panel) (Ex-1005, 9:32-37) and navigation ASIC (i.e., touch controller) to include Orr682's capability of detecting a tap gesture on the cover glass with the touch panel, and would have had a reasonable expectation of success in doing so, for the reasons I discussed above.

h. Element 14[G]: wherein [1] the microcontroller is arranged for controlling a display of indication on the display and [2] commanded so as to be switched to said second power mode upon a tap gesture detection by said touch controller and [3] for discriminating between gesture and no gesture based at least on signals from said touch panel.

142. It is my opinion that Orr-Orr682 teaches Element 14[G].

(1) Microcontroller controlling a display of indication on the display

143. Orr discloses a microcontroller arranged for controlling a display of indication on the display. Orr discloses that "***microprocessor 18***" "receive[s]" a "signal" (e.g., "a text message or web page download"), ***"then further processe[s]" the "received signal," and "generate[s] an output to display 14."*** Ex-1005, 5:38-51, Fig. 2 (showing microcontroller 18 connected to display 14).

(2) Microcontroller commanded to be switched to said second power mode upon a tap gesture detection by the touch controller

144. Orr also discloses a microcontroller commanded to be switched to a second power mode upon a tap gesture detection by the touch controller. OrrOrr682 teaches detection of a tap gesture by the touch controller. *See* Ground 1, Element 14[F]. And Orr discloses that its microcontroller is commanded to be switched to a second power mode upon detection of such a tap gesture by the touch controller. In Figure 5's "state 510," Orr's "navigation ASIC 72" (i.e., touch controller) has been powered on and is waiting for "receipt of a signal" from "touchscreen" "input device 34" (i.e., touch panel). Ex-1005, 12:28-64; *see also id.*, 11:30-38 (if no signal received from input device 34, power may be reduced or turned off). Once "navigation ASIC 72" (i.e., touch controller) has received such a signal and determined it to be a tap, as I described above (*see* Ground 1, Element

14[F]), "the system transits to state 512," where "a wake-up signal is generated and sent to … microprocessor 18, so that a ***transition to higher power level may occur***." Ex-1005, 12:28-64; *see also id.*, 6:15-31 (describing moves between power modes, particularly for microprocessor 18), 9:21-34 ("[I]f deemed appropriate signals are received" "from input device," "activation signal(s) are … provided to microprocessor" "as a wake-up signal to cause microprocessor" "to initiate a reactivation routine."), Fig. 5 (annotated, showing states in which both the touch controller and microcontroller are activated in green).

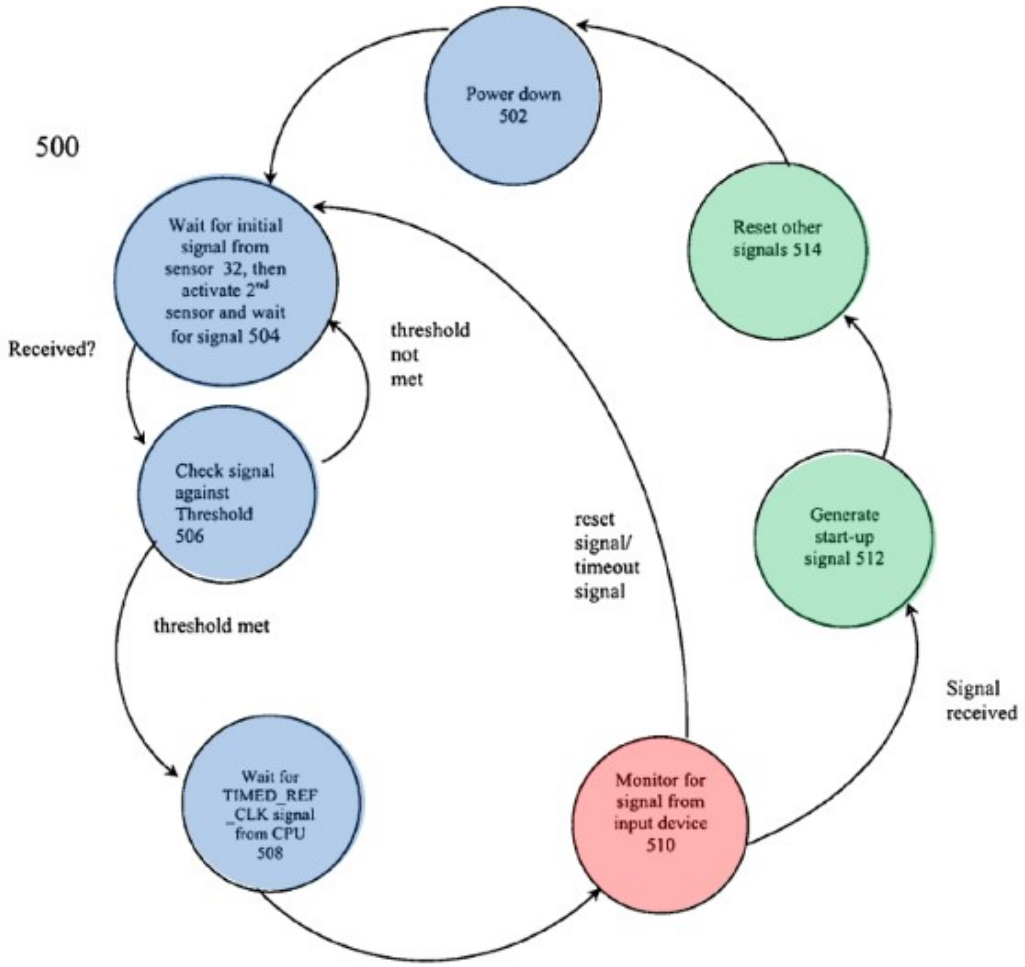

Fig. 5

(3) Microcontroller for discriminating between gesture and no gesture based at least on signals from said touch panel

145. Orr-Orr682 also teaches a microcontroller for discriminating between gesture and no gesture based at least on signals from the touch panel. Orr682 discloses discriminating between gesture and no gesture based on signals from the device's "touchscreen." Ex-1006, Abstract, ¶¶24-26, 28-31. And Orr682 discloses

that this determination can be made ***directly by the microcontroller*** itself and not only by the touch controller: "detection of a touch event and/or determining the location of the touch event" "***may be performed by either*** the controller of the touchscreen display … ***or the processor*** of the device." *Id.* ¶49; *see also id.* ¶¶99, 165-180. Thus, while the initial tap gesture could be detected by the touch controller, subsequent gesture detection "may be embodied … in software" in the microcontroller. *See id.* ¶¶49, 99. Indeed, Orr682 discloses that although "the location of [a] touch input (i.e., external force) is typically supplied by a controller of the touchscreen," "the device processor could determine the location of the external force ***from raw data feed from the touchscreen***." *Id.* ¶¶37, 53. Indeed, Orr682 discloses that its disclosed tap-detection method "may be embodied at least partially in software stored on the handheld electronic device 102 or may be embodied in a tap detection subsystem … in hardware and/software which may be incorporated into a handheld electronic device 102," indicating that the device's microprocessor may be involved in the touchscreen's gesture-detection process. *Id.* ¶99; *see also, e.g.*, *id.* ¶¶165-179 ("[O]perations 1000 may be used to verify any input via the touch-sensitive input surface 108." "The input verification module 228 configures the processor 240 to monitor for and detect the occurrence of touch input signals from the touchscreen display 106 … and use these signals in verifying an input."), 180. In my opinion, a POSITA would have recognized that,

because Orr's touchscreen controller must detect certain gestures before the microprocessor is awakened, it should operate at a low power and detect only a limited number of gestures, but once the system is fully awake, a more capable system, in which software on the microprocessor could recognize a large variety of gestures, would be advantageous. Indeed, this is consistent with Orr's disclosure of its touch controller ("navigation ASIC 72") as an "ASIC"—an "Application Specific Integrated Circuit"—which is generally a hardware processor specifically configured for a certain application, whereas microprocessors, on the other hand, are generally programmable with software and allow for further flexibility.

146. In my opinion, a POSITA would have been motivated to apply Orr682's teachings to Orr's system, such that the combined system comprises Orr's touchscreen input device (i.e., touch panel), navigation ASIC (i.e., touch controller), and microcontroller, modified to include Orr682's microcontroller's processing capability of discriminating between gesture and no gesture based on signals from the touch panel, and would have had a reasonable expectation of success in doing so, for the reasons I discussed above.

3. Independent Claim 1

a. Element 1[pre][1]: A method combining gesture detection by an inertial sensor and gesture detection with a touch panel for switching a wristwatch from a first power mode to a second power mode,

Element 1[pre][2]: wherein the inertial sensor comprises an accelerometer and a processor and/or other processing means,

Element 1[pre][3]: and wherein the wristwatch comprises a microcontroller controlling a display of indication on a digital matrix display of the wristwatch

Element 1[pre][4]: and a touch controller for interpreting touch signal provided by a touch panel underneath a cover glass and for converting said signals into command signal, the method comprising;

147. It is my opinion that Orr-Orr682 teaches Element 1[pre][1] for the same reasons as Element 14[pre]; Element 1[pre][2] for the same reasons as Element 14[E]; most of Element 1[pre][3] for the same reasons as Elements 14[A], 14[B], and 14[G]; and Element 1[pre][4] for the same reasons as Elements 14[C] and 14[D]. Ex-1020, Element 1[pre][1]-1[pre][4].

148. It is also my opinion that Orr-Orr682 teaches the remainder of Element 1[pre][3]: "a digital matrix display." In my opinion, a POSITA would have understood Orr's "display 14" to be a digital matrix display. For example, Orr discloses that the device may receive "a text message or web page download" which would be "processed by microprocessor" "which can then generate an output to display." Ex-1005, 5:38-43. In my opinion, a POSITA would have understood that a typical web page would be displayable by a digital matrix

display (as opposed to a fixed segment display or other limited display) and that Orr therefore discloses a digital matrix display.

b. Element 1[A]: using the accelerometer of the inertial sensor for generating an acceleration signal used for detecting a gesture on the cover glass of said wristwatch, while the microcontroller and the touch controller are in a sleep power mode;

149. It is my opinion that Orr-Orr682 teaches Element 1[A] for the same reasons as Element 14[E]. Ex-1020, Element 1[A].

c. Element 1[B]: using the processor and/or other processing means of the inertial sensor for discriminating between gesture and no gesture based on a direction of said acceleration signal and on a slope or frequency of said acceleration signal as measured by said accelerometer being a three dimensional accelerometer,

150. It is my opinion that Orr-Orr682 teaches Element 1[B] for the same reasons as Element 14[E]. Ex-1020, Element 1[B].

d. Element 1[C]: in response to a detection of a gesture by said inertial sensor, waking up the touch controller;

151. It is my opinion that Orr-Orr682 teaches Element 1[C] for the same reasons as Element 14[F]. Ex-1020, Element 1[C].

e. Element 1[D]: using the touch controller for detecting a tap gesture on the cover glass with the touch panel;

152. It is my opinion that Orr-Orr682 teaches Element 1[D] for the same reasons as Elements 14[C], 14[D], and 14[F]. Ex-1020, Element 1[D].

f. Element 1[E]: waking up the microcontroller in said wristwatch upon detection of a tap gesture by said touch controller,

153. It is my opinion that Orr-Orr682 teaches Element 1[E] for the same reasons as Element 14[G]. Ex-1020, Element 1[E].

g. Element 1[F]: using said microcontroller for detecting said gesture and for discriminating between gesture and no gesture based at least on signals from the touch panel.

154. It is my opinion that Orr-Orr682 teaches Element 1[F] for the same reasons as Element 14[G]. Ex-1020, Element 1[F].

4. Dependent Claims 2-5, 7, and 10-12

a. Claim 2: The method of claim 1, wherein the discrimination between gesture and no gesture is also based on a duration of said acceleration signal.

155. It is my opinion that Orr-Orr682 teaches Claim 2.

156. As I discussed with respect to Element 14[E], Orr682 discloses a tapdetection method comprising "registering a tap input when the rate of change of acceleration exceeds a predetermined tap threshold." Ex-1006 ¶24. Orr682 further discloses that the discrimination between gesture and no gesture may also be based on a duration of the acceleration signal: "the accuracy of tap detection" "can be further improved by analysing the ***duration***" of the acceleration signals. *Id.* ¶84. As shown in Figure 7, Orr682 measures the durations Δt_1, Δt_2, and Δt_{tap} of the acceleration signal. *Id.* ¶85.

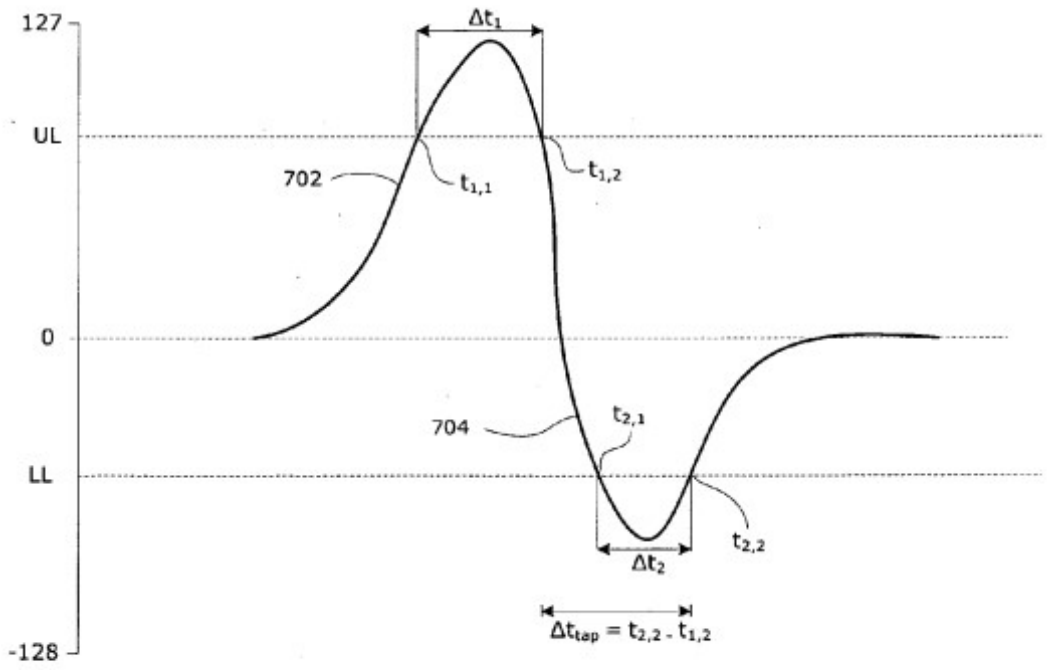

FIG. 7

b. Claim 3: The method of claim 2, wherein the discrimination between gesture and no gesture is also based on an amplitude of said acceleration signal.

157. It is my opinion that Orr-Orr682 teaches Claim 3.

158. Orr682 discloses that the discrimination between gesture and no gesture may also be based on an amplitude of the acceleration signal: "the accuracy of tap detection may be increased by measuring both the positive and negative peaks of an accelerometer tap response" (i.e., the amplitude of the acceleration signal). *Id.* ¶84. As shown in Figure 7, Orr683 discloses that "an upper limit (UL) threshold and lower limit (LL) threshold are defined and detected for the accelerometer response" (*id.* ¶85), where UL and LL represent "predetermined

strike force threshold[s]" that must be exceeded for a predetermined time duration, Δt_1 and Δt_2, for a tap to be detected (*id.* ¶¶85, 171).

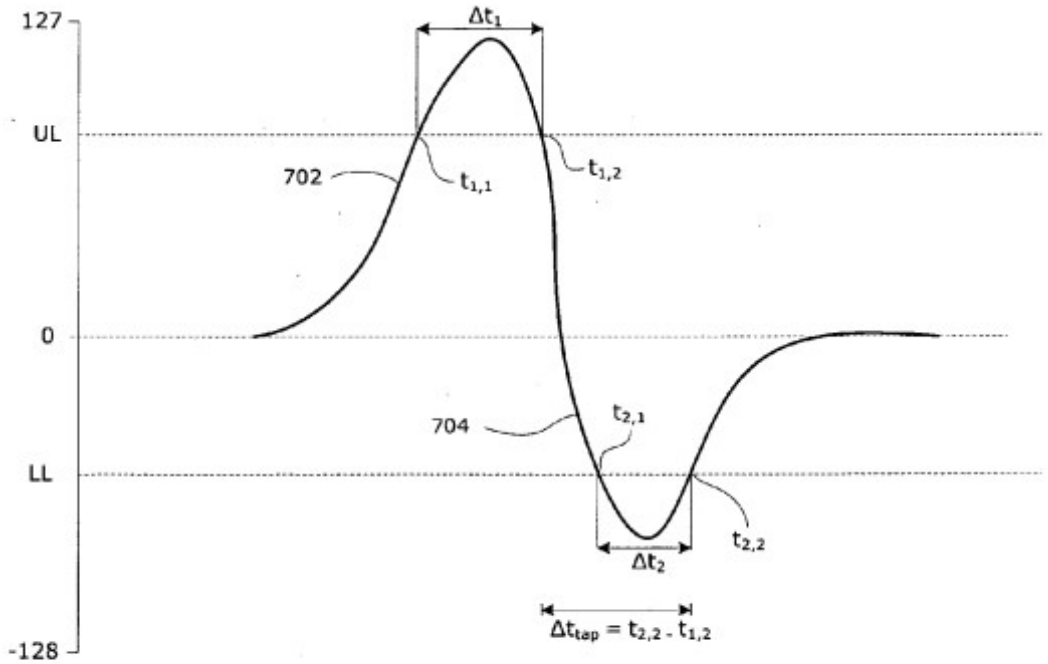

FIG. 7

c. Claim 4: The method of claim 1, said step of discriminating between gesture and no gesture comprises determining said frequency and determining that there is no gesture if said frequency is not in a predetermined frequency range compatible with a tap.

159. It is my opinion that Orr-Orr682 teaches Claim 4.

160. Orr682 discloses that discriminating between gesture and no gesture may also be based on determining a frequency of the acceleration signal and determining that there is no gesture if the frequency is not in a predetermined frequency range compatible with a tap.

161. Orr682 discloses that discriminating between gesture and no gesture is also based on determining a frequency of the acceleration signal and determining that there is no gesture if the frequency is not in a predetermined frequency range compatible with a tap. As I discussed for Element 14[E] above, Orr682 measures parameters of the acceleration pulse that characterize its frequency, as shown in Figure 7, which illustrates a "tap response" of the accelerometer. Ex-1006 ¶83, Fig. 7. The tap response exhibits two narrow peaks 702 and 704, and Orr682 measures the "duration of the time that the accelerometer output is above the upper limit," or Δt_1; the "duration of the time that the accelerometer output is below the lower limit," or Δt_2; and the "difference between the start time … and end time" of the accelerometer pulses, denoted $t_{1,1}$, $t_{1,2}$, $t_{2,1}$, and $t_{2,2}$. *Id.* ¶85. Orr682 makes such measurements because the "accuracy of tap detection" "can be further improved by analysing the duration of each of the positive and negative peaks, the duration of the peaks, and possibly the duration between the peaks." *Id.* ¶¶84-85. Orr682's processor "determines that a tap … has occurred when the interrupt signals corresponding to the upper and lower threshold are received within a predetermined duration of each other." Ex-1006 ¶86. In other words, just as taught in the '678 Patent (Ex-1001, 6:35-43), Orr682 uses the frequency of the acceleration signal, as characterized by its quick rise and fall and overall duration, to distinguish between a tap gesture and no tap gesture. In my opinion, a POSITA

would have understood Orr682's disclosure that a tap requires an acceleration signal to have a start and end point within a certain time range to comprise determining that there is no tap gesture if its frequency is not in a predetermined frequency range compatible with a tap.

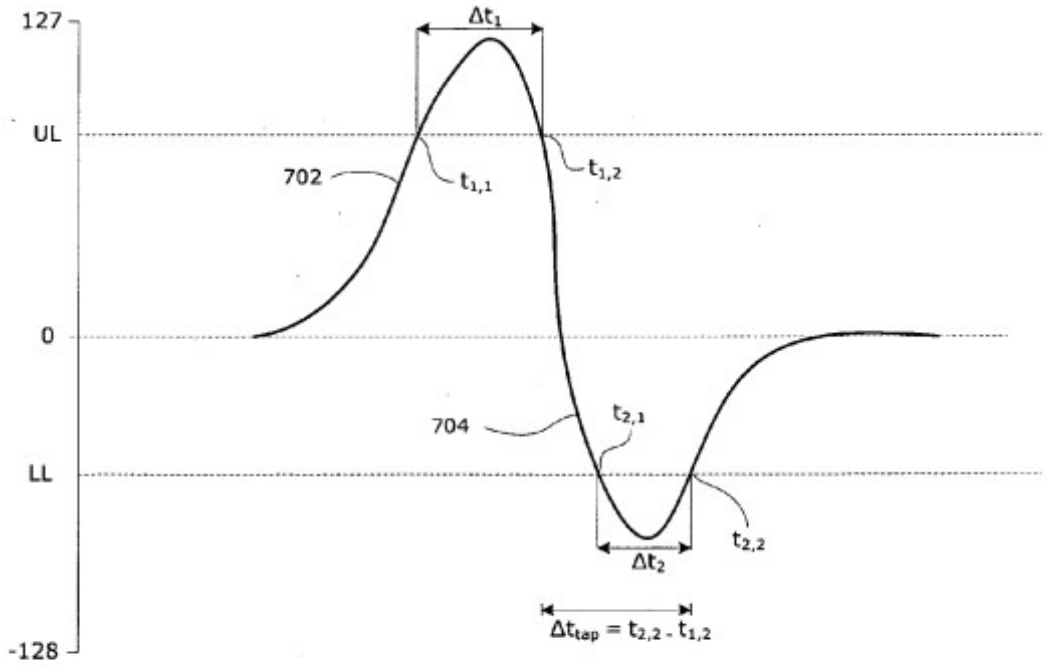

FIG. 7

d. Claim 5: The method of claim 1, said step of discriminating between gesture and no gesture comprises determining said direction and determining that there is no gesture if said direction is not substantially perpendicular to said cover glass.

162. It is my opinion that Orr-Orr682 teaches Claim 5.

163. Orr discloses that the discrimination between gesture and no gesture is also based on determining a direction of the acceleration signal and determining that there is no gesture if the direction is not substantially perpendicular to the

cover glass: Orr discloses that its "motion sensor" (i.e., accelerometer and processor) "detect[s] movement along a desired axis"—the "'***Z' axis***"—which is perpendicular to the cover glass—and may require such movement to be in a "***certain direction***" to be considered a signal that is meant to turn on the device. Ex-1005, 7:66-8:20, 11:6-20. In my opinion, a POSITA would have understood that detecting the direction of acceleration, including along a desired Z axis (perpendicular to the cover glass), and requiring a certain direction comprises determining the direction and determining that there is no gesture if said direction is not substantially perpendicular to said cover glass.

164. In my opinion, a POSITA would have recognized that while wearing a wristwatch equipped with an accelerometer, a user might inadvertently knock the watch against the edge of a desk or against a wall or against some other object that could cause an abrupt acceleration profile. But a system that could discriminate between an impact with the side of the device and a tap on the surface of the device would be able to reject the side impact as an unintentional tap based on the direction of the acceleration. Thus, in my opinion, a POSITA would have understood that Orr's "direction" detection would have been used to ensure that a potential gesture was directed substantially perpendicular to the cover glass in order to reject false positive signals.

e. Claim 7: The method of claim 1, wherein discrimination between gesture and no gesture

depends on a duration between a detection signal from said accelerometer and a detection signal with said touch panel.

165. It is my opinion that Orr-Orr682 teaches Claim 7.

166. Orr discloses that the discrimination between gesture and no gesture may also be based on a duration between a detection signal from the accelerometer and a detection signal with the touch panel. In Figure 5's "state 510," if a signal is not received at the touch panel within "a predetermined length of time" after a signal is received at the accelerometer, the system stops "waiting for a notable signal" from the touch panel and times out, or reverts back to "state 504." Ex-1005, 2:54-62, 3:3-36. Thus, the detection signal from accelerometer subsystem and the detection signal from the touch panel must occur within a particular time interval, and the gesture-discrimination method thus depends on a duration between the two. *Id.*, 12:28-64, Fig. 5 (annotated, showing "reset signal/timeout signal" in yellow).

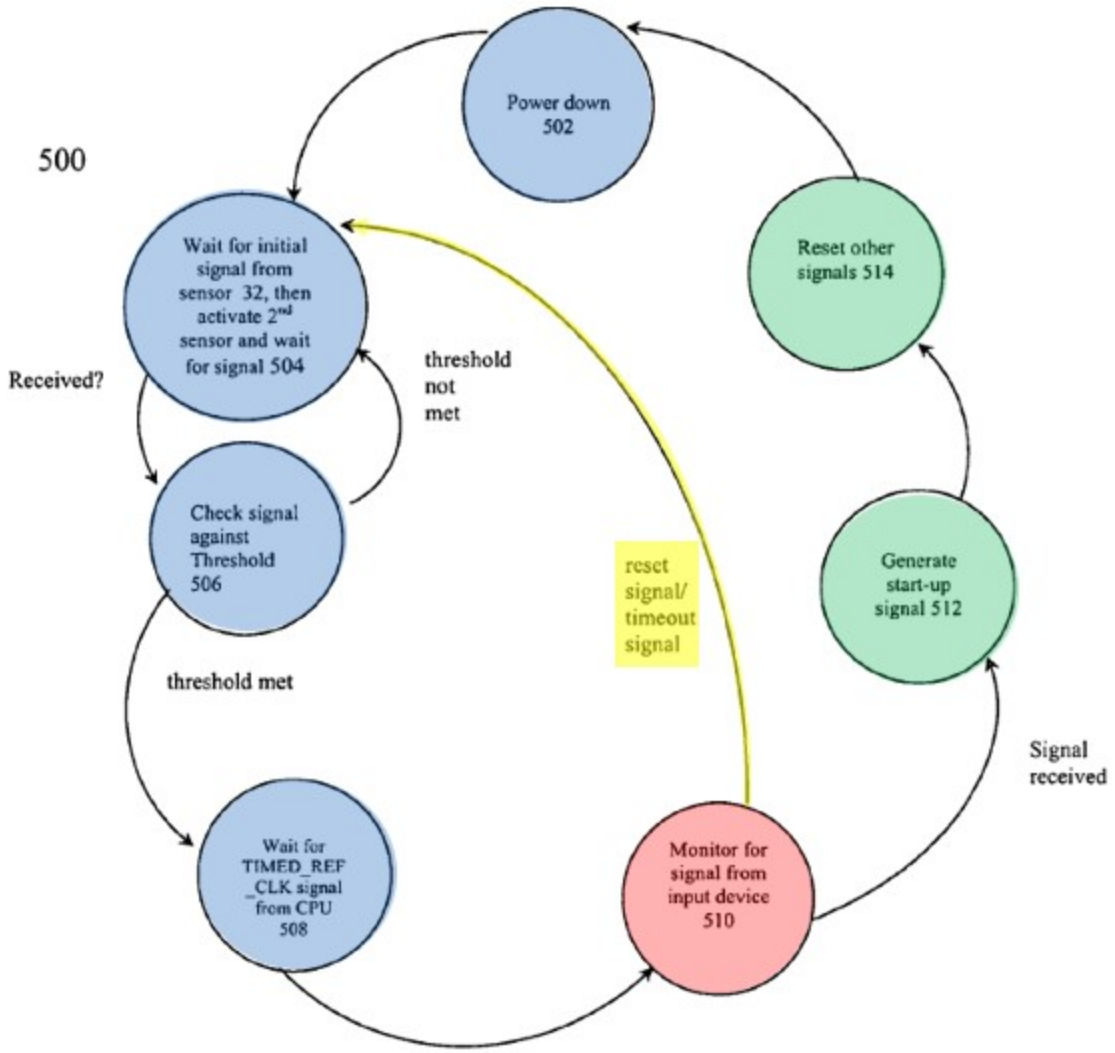

Fig. 5

f. Claim 10: The method of claim 1, comprising a step of waking up a microcontroller in said wristwatch upon detection of a gesture by said accelerometer and with said touch panel.

167. It is my opinion that Orr-Orr682 teaches Claim 10.

168. The following process is performed in Orr's "two-stage approach … used to re-activate [the] device":

> First, trigger circuit 38 is used with motion sensor 32 to detect an initial movement or intent to use device 10 [(i.e., ***gesture detection by accelerometer***)]. Collectively, trigger circuit 38 and motion sensor 32 may be considered to be a motion sensor circuit. Once the trigger circuit 38 generates its activation signal, monitoring circuit 36 is activated with input device 34 [(i.e., ***touch panel***)] to detect any further indication that the device is meant to be reactivated. Once monitoring circuit 36 determines that device 10 is meant to be reactivated, it ***sends a re-activation signal to microprocessor 18***.

Ex-1005, 6:45-54. Thus, the microcontroller is awakened after detecting a gesture by the accelerometer and by the touch panel. *Id.*, Fig. 5 (step 12 "generate start-up signal").

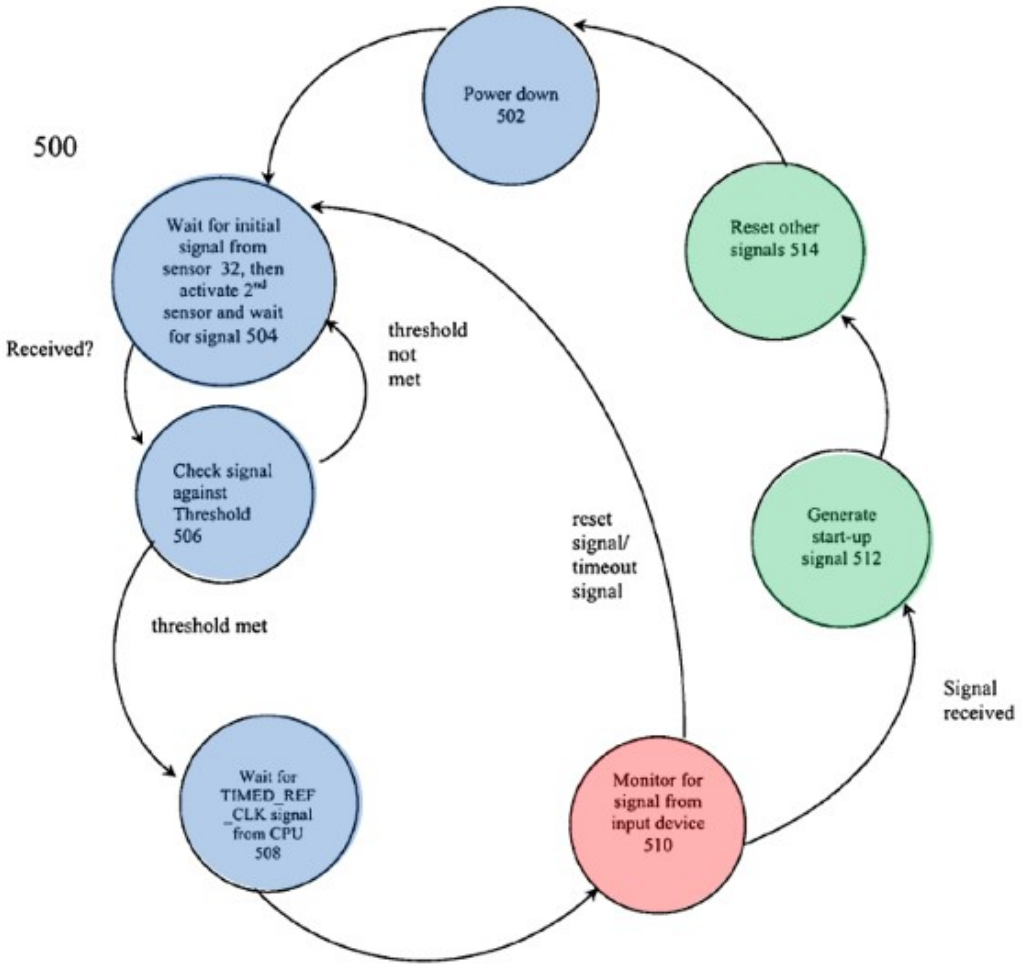

Fig. 5

g. Claim 11: The method of claim 1, said gesture being a tap or a double tap.

169. It is my opinion that Orr-Orr682 teaches Claim 11.

170. Orr discloses that its "motion sensor 32" (i.e., accelerometer and processor) evaluates the acceleration signals and "may require them to be of a certain direction, force, duration, speed or any combination of those characteristics to be considered a signal which is meant to turn on device 10." Ex-1005, 11:6-20.

Indeed, "a specific gesture … may be required." *Id.* In my opinion, a POSITA would have understood that such gestures may include a tap or a double tap gesture. In my opinion, it would have been obvious to a POSITA that the "specific gesture" required by Orr could have been a tap gesture. Tap gestures were very common in the art, and essentially any touchscreen / touch controller would have been equipped to detect a tap or double tap gesture. *See, e.g.,* Ex-1016 ¶¶13, 110.

171. Furthermore, Orr-Orr682 teaches using an accelerometer and processor for detecting a tap gesture. As shown in Figure 16, Orr682 discloses using an accelerometer and a processor associated with the accelerometer in a "method for tap detection" comprising "measuring acceleration" and "registering a tap input when the rate of change of acceleration exceeds a predetermined tap threshold." Ex-1006 ¶¶24-26, 74-75. In my opinion, a POSITA would have been motivated to enhance Orr's accelerometer with Orr682's processing capability for detecting a tap gesture, and would have had a reasonable expectation of success in doing so, for the reasons I discussed above.

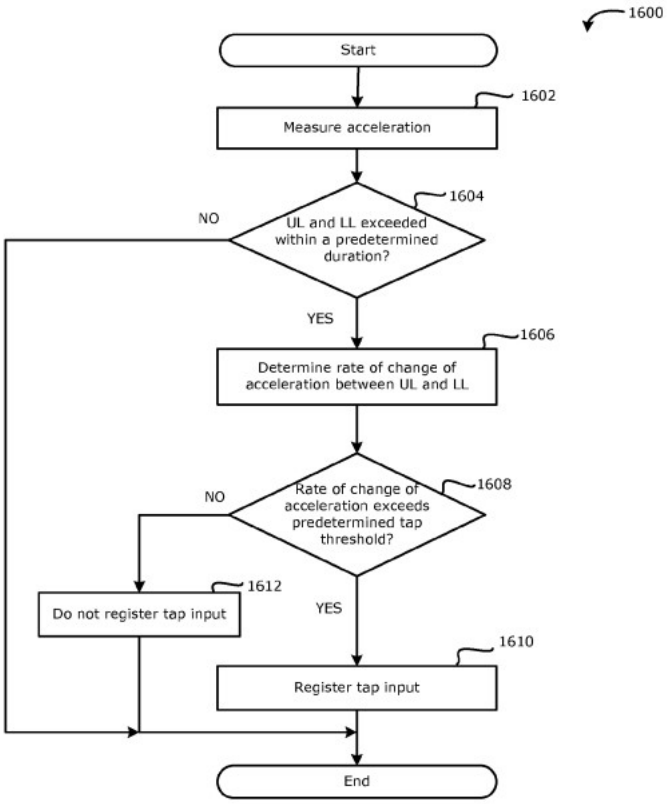

FIG. 16

h. Claim 12: The method of claim 1, further comprising a step of detecting a wristturn with said accelerometer, and switching said wristwatch from said first power mode to said second power mode when a wristturn has been detected.

172. It is my opinion that Orr-Orr682 teaches Claim 12.

173. Orr discloses detecting a wristturn with the accelerometer, and switching the wristwatch from a first power mode to a second power mode when a wristturn has been detected: "In an embodiment, a specific gesture," "such as a quick 'snap' movement," (i.e., detecting a wristturn) "detected by sensor 32" (i.e.,

accelerometer) "and/or sub-system 42" (i.e., processor) "may be required to activate device 10" (i.e., switching the device from a first power mode to a second power mode when a wristturn has been detected). Ex-1005, 8:64-9:7; *see also id.*, Abstract, 6:41-7:2, 9:21-43, 11:6-20. In my opinion, a POSITA would have understood that a wrist turn is a "snap movement" and thus that Orr teaches detecting a wrist turn with the accelerometer, and switching the electronic device from a first power mode to a second power mode when a wrist turn has been detected. *See also infra* ¶¶210-215. Moreover, for a device in the form factor of a wristwatch, in my opinion, a POSITA would have understood that essentially the only "snap gesture" a user can make with such a device is a quick rotation of the wrist. Thus, in my opinion, a POSITA would have understood Orr's snap gesture to be referring to a wristturn.

B. Ground 2: Claims 6, 8, 9, and 15 Are Obvious Over Orr In View of Orr682 and Further In View of Li (Ex-1007)

1. A POSITA would have been motivated to combine the teachings of Orr-Orr682 and Li, and would have had a reasonable expectation of success in doing so

174. In my opinion, a POSITA would have been motivated to combine the teachings of Orr-Orr682 with Li and would have had a reasonable expectation of success in doing so because each relates to input gesture detection using a touchscreen in portable electronic devices. Ex-1005, 11:11-18; Ex-1006 ¶91;

Ex1007, Abstract. And Orr, Orr682, and Li all provide compatible solutions for reducing power consumption. Ex-1005, 6:32-54; Ex-1006 ¶136; Ex-1007, Abstract, 13:57-61. Orr-Orr682 is directed to reducing power consumption in electronic devices by providing sleep modes in which certain hardware is put into a lower power state. E.g., Ex-1005 9:46-56. Li teaches methods of selectively powering up only portions of a touchscreen "with the objective of reducing the power consumption of the capacitive touchscreen system." Ex-1007, 13:57-14:29. Thus, although Orr-Orr682 teaches reducing power consumption in electronic devices by, *inter alia*, requiring a "two-stage approach" to "fully re-activate[]" the device in order to avoid "unnecessary re-activations of the microprocessor" due to "[f]alse positives" (Ex-1005, 1:32-42, 6:41-54), Li teaches methods by which such a touch panel device's power consumption may be further lowered (Ex-1007, Abstract, 13:57-14:20). Based on the teachings of Li, in my opinion, a POSITA would have recognized that incorporating Li's methods of activating only a subset of the touch area of the touch panel into the Orr-Orr682 system would have furthered Orr, Orr682, and Li's power-reduction goals as it would provide further opportunities to reduce power consumption while still allowing for the confirmation of user input at the touch panel. For example, in my opinion, a POSITA would have recognized that applying Li's teachings regarding activating only a subset of the touch area of the touch panel, such as a keypad area, into the

Orr-Orr682 system would provide a further mechanism to reduce the device's power consumption, while still furthering Orr-Orr682's goals of confirming a user's intended input, reducing false positives, and, as a result, reducing the device's power consumption due to unintended activations.

175. In my opinion, modifying Orr-Orr682 to include Li's partial activation features would have been a straightforward engineering task for a POSITA as Orr, Orr682, and Li all disclose standard mobile computing devices that use touchscreens for input gesture detection. Indeed, Orr, Orr682, and Li disclose general purpose computing devices that work in the same general way and that, in my opinion, a POSITA would have understood were capable of using the same and/or similar programming languages and/or operating systems. Accordingly, in my opinion, a POSITA would have had a reasonable expectation of success in implementing the approaches described in Li into the Orr-Orr682 system as the implementation would have been a matter of using familiar elements and thus would have yielded predictable results. For example, Orr, Orr682, and Li all disclose the use of touch panels, touch controllers, and microcontrollers; using such components to detect and determine input gestures; and controlling such components and their input-gesture-detection mechanisms via software in order to reduce false inputs, all on a general purpose computing device. In my opinion, implementing each of these disclosures was well within the skills of a POSITA.

176. Furthermore, in my opinion, a POSITA would have had a reasonable expectation of success in combining the teachings of Orr, Orr682, and Li. Each purports to solve problems relevant to handheld electronic devices in similar and predictable ways—for example, Orr teaches a "two-stage approach" involving added confirmation for input gesture detection, Orr682 teaches a method to discriminate a purposeful tap from a false input in a portable electronic device using features inherent to a tap gesture, and Li teaches activating only a subset of the touch area of the touch panel to reduce power consumption. Ex-1005, 6:32-54; Ex-1006 ¶¶24-26, 28-31, 82-91; Ex-1007, Abstract, 13:57-14:20. In my opinion, a POSITA would have understood that the teachings of Orr, Orr682, and Li could have been combined with no change in the respective functions as Orr, Orr682, and Li teach compatible systems.

2. Dependent Claims 6, 8, 9, and 15

a. Claim 6: The method of claim 1, wherein said touch panel comprises a plurality of touch areas, said method comprising a step of applying a power supply sufficient for detecting a gesture to only a first subset of said touch areas.

177. It is my opinion that Orr-Orr682 in view of Li ("Orr-Orr682-Li") teaches Claim 6.

178. Li discloses a plurality of touch areas and applying a power supply sufficient for detecting a gesture to only a first subset of the touch areas:

in one embodiment, "only a fraction of touchscreen 90" (i.e., a first subset of a plurality of touch areas) is "activated" Ex-1007, 14:30-34. For example, "[d]rive lines outside of the area of interest on touchscreen 90 are turned off, resulting in power savings." *Id.*, 14:30-34. Similarly, "if the left half of touchscreen 90 is flagged as containing no touches, firmware can turn off the drive lines that are associated with the left half of touchscreen 90." *Id.*, 14:16-19.

179. Thus, Orr-Orr682-Li renders obvious Claim 6.

b. Claim 8: The method of claim 1, wherein said accelerometer is powered on when said wristwatch is in said first power mode, said method comprising a step of partially waking up said touch panel upon detection of a gesture by said accelerometer.

180. It is my opinion that Orr-Orr682-Li teaches Claim 8.

181. In Orr's "two-stage approach … to re-activate [the] device," "[f]irst," the accelerometer "detect[s] an initial movement or intent to use [the] device" (i.e., the accelerometer is powered on when the device is in a first power mode); then, "input device 34" (i.e., touch panel) "is activated" "to detect any further indication that the device is meant to be reactivated" (i.e., waking up the touch panel upon detection of a gesture by the accelerometer). Ex-1005, 6:32-54. Orr-Orr682's touch panel, as modified by Li, can be partially

awakened, as I discussed with reference to Claim 6 in paragraphs 177-179. Ex-1007, 9:12-22, 14:30-53.

182. Thus, Orr-Orr682-Li renders obvious Claim 8.

c. Claim 9: The method of claim 6, comprising a step of waking up only a subset of the complete area of said touch panel upon detection of a gesture by said accelerometer.

183. It is my opinion that Orr-Orr682-Li teaches Claim 9.

184. In Orr's "two-stage approach … to re-activate [the] device," "[f]irst," the accelerometer "detect[s] an initial movement or intent to use [the] device;" then, "input device 34" (i.e., touch panel) "is activated" "to detect any further indication that the device is meant to be reactivated" (i.e., waking up the touch panel upon detection of a gesture by the accelerometer). Ex-1005, 6:32-54. As I discussed with reference to Claim 6 in paragraphs 177-179, Li discloses methods of waking up only a subset of the complete area of a touch panel, wherein, for example, "only a fraction of touchscreen 90" is "activated." Ex-1007, 14:30-53. 185. Thus, Orr-Orr682-Li renders obvious Claim 9.

d. Claim 15: The wristwatch of claim 14, wherein said touch panel comprises a plurality of touch areas and powering means arranged for powering only a first subset of said touch area upon detection of a gesture by said accelerometer, and for powering a larger subset in said second power mode.

186. It is my opinion that Orr-Orr682-Li teaches Claim 15.

187. "Powering means" is governed by 35 U.S.C. §112(6), as I discussed in paragraphs 76-77. The corresponding structure is "power supply 20" and logic associated with touch controller 24 for powering up only a portion of the touch area and for powering a larger subset, or their equivalents, as described at Ex-1001, 7:49-61 and 5:4-13. Orr discloses logic associated with a touch controller as I described for Elements 14[C] and 14[D]. Similarly, Li discloses logic associated with a touch controller: "under control of ***touchscreen processor 100 and the navigation hardware controller***" drive signals are provided to certain drive lines. Ex-1007, 6:31-37. Orr also discloses a power supply: "Powering the entire electronics of the mobile handheld communication device is power source 170." Ex-1005, 6:4-14. The combined Orr-Orr682-Li system performs the recited function using these structures, with Orr's touch panel improved with the teachings of Li.

188. In Orr's "two-stage approach … to re-activate [the] device," "[f]irst," the accelerometer "detect[s] an initial movement or intent to use [the] device;" then, "input device 34" (i.e., touch panel) "is activated" "to detect any further indication that the device is meant to be reactivated" (i.e., powering the touch area of a touch panel upon detection of a gesture by the accelerometer). Ex-1005, 6:3254. Li discloses a touch panel comprising a plurality of touch areas and powering only a first subset of the touch panel (e.g., "only a fraction of

touchscreen 90") initially and a larger subset once touches are detected (e.g., transition to "Full Scan Mode" once touches are detected). Ex-1007, 9:23-26, 14:30-53. More specifically, Li's "activated" "fraction of touchscreen 90" is the claimed "first subset of said touch area." *See id.*, 14:30-53. Then, Li discloses a second mode in which the entire touchscreen may be powered, comprising a "larger subset in said second power mode." *See id.*, 9:23-26 (transitioning to "Full Scan Mode" once touches are detected). In my opinion, a POSITA would have understood that a "larger subset" of the touchscreen could coincide with the entire touchscreen. For example, in mathematics, set B is a ***subset*** of set A if and only if every member of B is also a member of A. So if B coincides with A, B still meets that definition and is still a subset of A. Ex-1029 (Wolfram Mathworld's definition of "subset.").

189. In my opinion, it would have been obvious to a POSITA to first enter this lower-power mode of touch processing because Orr teaches avoiding "unnecessary reactivations" that would consume additional power. Ex-1005, 1:4042. Once a valid touch signal has been detected, indicating a desire to fully wake up the microprocessor, in my opinion, a POSITA would have been motivated to increase the fraction of the touchscreen that was powered up in order to increase the responsiveness and flexibility of the system in responding to user input.

C. Ground 3: Claims 1-5, 7, 10-12, and 14 Are Obvious Over Orr In View of Orr682 And Further In View of Pasquero.

190. While the Orr-Orr682 combination teaches the claims challenged in Ground 3 (*see* Ground 1), this additional ground includes Pasquero, which shares a co-inventor with Orr, and which expressly discloses a wristwatch with a touchscreen and accelerometer, compatible with Orr-Orr682, and thus further demonstrates that it would have been obvious to a POSITA to implement OrrOrr682 on a wristwatch, such as that disclosed by Pasquero.

1. A POSITA would have been motivated to combine the teachings of Orr-Orr682 and Pasquero, and would have had a reasonable expectation of success in doing so

191. In my opinion, a POSITA would have been motivated to combine the teachings of Orr-Orr682 with Pasquero and would have had a reasonable expectation of success in doing so. Orr and Orr682 share a common lead inventor, Kevin Orr, and Orr and Pasquero share a common co-inventor, Steven Fyke, and all three applications were owned by Research In Motion / BlackBerry. Each reference also relates to input gesture detection using a touchscreen and/or accelerometer in portable electronic devices. Ex-1005, 8:64-9:7, 11:11-18; Ex-1006 ¶¶24-26, 28-31, 91; Ex-1009, 3:38-50, 9:10-38. And Orr, Orr682, and Pasquero all provide compatible systems, while disclosing various form factors. Ex-1005, Abstract, 1:14-22, 3:39-58; Ex-1006, Abstract; Ex-1009, Abstract, 3:38-

50, 9:10-38. Orr-Orr682 teaches an "optimally … lightweight [and] compact" "electronic device" that is "based on a computing platform having functionality of an enhanced personal digital assistant" and that "can be based on construction design and functionality of other electronic devices, such as smart telephones, desktop computers pagers or laptops having telephony equipment." Ex-1005, 1:1422, 3:39-58. Pasquero teaches a "portable electronic device" that is a "Personal Digital Assistant[]" that is "in the form of" "a watch" that is "worn at or near the wrist of a user" (Ex-1009, 1:14-31, 2:29-30, 3:38-50, 7:33-41). Based in particular on the teachings of Pasquero, in my opinion, a POSITA would have recognized the feasibility of implementing the Orr-Orr682 system in a wristwatch. Indeed, similar to the devices disclosed in Orr and Orr682, Pasquero discloses a wristwatch comprising "display 116" (i.e., "touch-sensitive display"), "sensors 114" (i.e., "touch sensors"), and "accelerometer 113." *See* Ex-1009, Abstract, 3:38-50, 9:10-38. Moreover, in my opinion, a POSITA would have recognized that applying Pasquero's teachings of implementing a PDA in a wristwatch would have furthered Orr's goals of an "optimally … lightweight [and] compact" form factor (Ex-1005, 1:14-22).

192. In my opinion, a POSITA also would have been motivated to implement the combined Orr-Orr682 system on a wristwatch, such as disclosed by Pasquero, as a POSITA would have understood that the combined Orr-Orr682,

with its advanced tap-detection calculation abilities, possessed the required robustness and precision necessary to prevent unnecessary power mode switches based on unintentional movements associated with a wrist-worn device.

193. Moreover, as wristwatches having multiple power modes, motion detectors/accelerometers, and/or touchscreen displays were well-known in the art, in my opinion, a POSITA would have recognized the feasibility of implementing the Orr-Orr682 system in a wristwatch, as disclosed in Pasquero. Indeed, for example, Fitzgerald discloses a wristwatch with a touchscreen that uses an accelerometer to switch between multiple power modes (Ex-1010, 2:66-3:2, 3:1827, 7:8-26, 11:28-46); Fyke discloses a wristwatch comprising a touch panel (Ex-1011 ¶¶23, 66); Louch discloses a wristwatch with a touchscreen interface (Ex1012 ¶49, Fig. 1F); Tecchiolli discloses a wrist-worn electronic device with a motion detector to facilitate switching between multiple power modes (Ex-1013, 1:4-10, 2:12-13, 9:27-10:5); Marvit911 discloses a wristwatch comprising an accelerometer (Ex-1014 ¶¶34-35, 43, 166); and Marvit528 discloses a wristwatch comprising an accelerometer and touchscreen (Ex-1015, Abstract, 1:34-62).

194. Furthermore, as wristwatches incorporating cellular telephony (as described by Orr (Ex-1005, 3:59-61)), were well-known in the art, in my opinion, a POSITA would have recognized the feasibility of implementing the Orr-Orr682 system in a wristwatch, as disclosed in Pasquero. For example, by 1999, Samsung

had introduced the SPH-WP10, a "smartphone and a watch in one" that "could last for 90 minutes of talk time and 60 hours on standby," as shown below. Ex-1021.

Image of Samsung SPH-WP10.

195. In 2009, Samsung released its S9110, its second "phone/watch hybrid," as shown below. *Id.* The S9110 could last for "more than four hours" of "talk time" and "had both a touch screen and physical buttons." *Id.*

Image of Samsung S9110.

196. LG debuted its GD910 "smartwatch phone," shown below, at CES 2008, which it released in 2009. *Id.* The GD910 featured a tempered glass" "diagonal screen," "voice recognition," and "text to speech." *Id.*

Image of LG GD910.

197. Moreover, for example, Cho discloses a "watch phone" comprising a "watch mode" in which the device's "touch screen panel" is "turn[ed] off" and an "idle mode" in which the "touch screen panel" is "turn[ed] on" (Ex-1017, Abstract); Chiang discloses a "watch-like cell phone," to be "fit[] … to a user's wrists," and to "display[] time" and "cell phone … information" (Ex-1018, Abstract); and Kim discloses a "wristwatch" "communication terminal" (Ex-1019 ¶¶19, 22-27).

198. Accordingly, in my opinion, a POSITA would have understood that applying Orr-Orr682 to Pasquero's wristwatch format would have been well within the capabilities of a POSITA and would have been a matter of ordinary engineering and not the product of innovation.

199. In my opinion, implementing Orr-Orr682 in the wristwatch form factor described in Pasquero would have been a straightforward engineering task for a POSITA as Orr, Orr682, and Pasquero all disclose standard mobile computing devices that use accelerometers and touchscreens for input gesture detection. Indeed, Orr, Orr682, and Pasquero disclose general purpose computing devices that work in the same general way and, in my opinion, that a POSITA would have understood were capable of using the same and/or similar programming languages and/or operating systems. Accordingly, in my opinion, a POSITA would have had a reasonable expectation of success in implementing the Orr-Orr682 system in the wristwatch form factor described in Pasquero as the implementation would have been a matter of using familiar elements and thus would have yielded predictable results. For example, Orr, Orr682, and Pasquero all disclose the use of accelerometers and accompanying processors, touch panels, touch controllers, and microcontrollers; using such components to detect and determine input gestures; and controlling such components and their input-gesturedetection mechanisms via software, all on a general purpose computing device. In my opinion, implementing each of these disclosures was well within the skills of a POSITA.

200. Furthermore, in my opinion, a POSITA would have had a reasonable expectation of success in combining the teachings of Orr, Orr682, and Pasquero as each shares an inventor in common with Orr (Orr and Orr682 name a common lead

inventor, Kevin Orr, and Orr and Pasquero both list Steven Fyke as a named inventor) and all three are assigned to the same portable electronic device company. In my opinion, a POSITA would have understood that the teachings of Orr, Orr682, and Pasquero could have been combined with no change in the respective functions as Orr, Orr682, and Pasquero teach compatible systems.

2. Claims 1-5, 7, 10-12, and 14

201. It is my opinion that Orr-Orr682 in view of Pasquero ("Orr-Orr682Pasquero") teaches Claims 1-5, 7, 10-12, and 14 for the same reasons I discussed for Ground 1 (Section XIII.A).

202. Pasquero further provides an explicit disclosure, by a co-inventor of Orr, of the watch form factor recited in Claims 1-5, 7, 10-12, and 14. In my opinion, a POSITA would have been motivated to implement the combined OrrOrr682 system in the wristwatch form factor disclosed in Pasquero, and would have had a reasonable expectation of success in doing so, for the reasons I discussed above. Pasquero discloses "detecting receipt of an input" in a "portable electronic device" that is "in the form of" "a watch" that is "worn at or near the wrist of a user," as shown in Figures 2 and 3. Ex-1009, Abstract, 2:29-30, 3:38-50, Figs. 2-3. Like the devices described in Orr and Orr682, Pasquero's wristwatch comprises "a touch-sensitive display" (i.e., "display 116"), "touch sensors" (i.e.,

"sensors 114"), and "accelerometer 113." *See id.*, Abstract, 3:23-50, 9:10-38; *see also id.*, 2:46-60, 5:15-38, 7:33-41, 8:10-20.

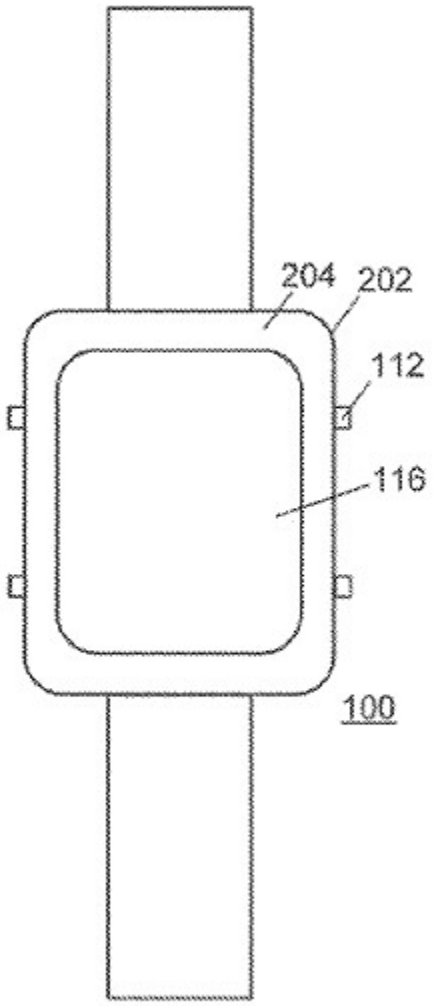

FIG. 2

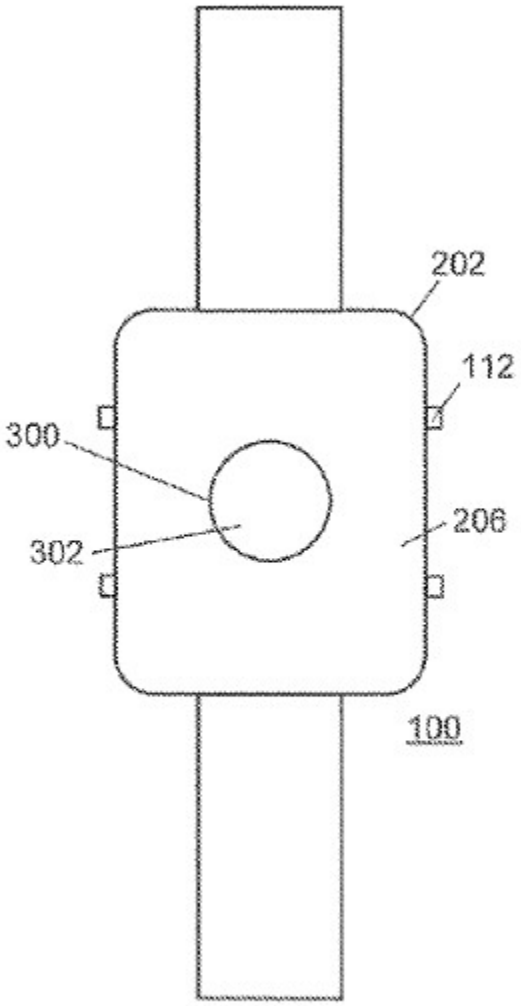

FIG. 3

203. For this reason, and for the reasons I discussed above with respect to Ground 1, it is my opinion that Orr-Orr682-Pasquero renders obvious the wristwatch recited in Claims 1-5, 7, 10-12, and 14.

D. Ground 4: Claims 6, 8, 9, and 15 Are Obvious Over Orr In View of Orr682 and Pasquero and Further In View of Li

204. While the Orr-Orr682-Li combination teaches the claims challenged in Ground 4 (*see* Ground 2), this additional ground includes Pasquero, which shares a co-inventor with Orr, and which expressly discloses a wristwatch with a touchscreen and accelerometer, compatible with Orr-Orr682-Li, and thus further demonstrates that it would have been obvious to a POSITA to implement OrrOrr682-Li on a wristwatch, such as that disclosed by Pasquero.

1. A POSITA would have been motivated to combine the teachings of Orr-Orr682-Pasquero and Li, and would have had a reasonable expectation of success in doing so

205. In my opinion, a POSITA would have been motivated to combine Orr, Orr682, and Pasquero for the same reasons I discussed in Ground 3. In my opinion, a POSITA would further have been motivated to combine Li's teachings with the teachings of Orr-Orr682-Pasquero for the same reasons a POSITA would have been motivated to combine Li's teachings with the teachings of Orr-Orr682, which I discussed in Ground 2.

2. Claims 6, 8, 9, and 15

206. It is my opinion that Orr-Orr682-Pasquero in view of Li ("OrrOrr682-Pasquero-Li") teaches Claims 6, 8, 9, and 15 for the same reasons I discussed for Ground 2 (Section XIII.B).

E. Ground 5: Claims 12-13 Are Obvious Over Orr In View of Orr682 and Pasquero and Further In View of Yeung (Ex-1009)

1. A POSITA would have been motivated to combine the teachings of Orr-Orr682-Pasquero and Yeung, and would have had a reasonable expectation of success in doing so

207. In my opinion, a POSITA would have been motivated to combine the teachings of Orr-Orr682-Pasquero with Yeung and would have had a reasonable expectation of success in doing so because each of Orr, Orr682, and Yeung provides compatible solutions for using an accelerometer to change power modes, while Pasquero and Yeung both disclose a wristwatch comprising such an accelerometer. Ex-1005, 9:2-7; Ex-1006 ¶91; Ex-1008 ¶¶15, 36; Ex-1009, 2:29-30, 3:23-50, 9:10-38. Orr-Orr682 teaches "a two-stage approach … to re-activate [the] device" involving the accelerometer's detecting a gesture, which triggers the touch panel's activation to confirm the user's intended input (Ex-1005, 6:32-54, 9:21-43; Ex-1006 ¶¶24-26, 74-75), and Yeung teaches specific methods for activating functionality based on using an accelerometer to detect a specific gesture, namely, a user's wristturn. Ex-1008 ¶¶52 ("recorder controller 48 can detect ***clockwise circular movement of the wrist*** … to activate fast forwarding"), 58 ("activate recording after using accelerometer 172 to detect … a predetermined movement of the wrist, such as ***rotating the wrist***"). In my opinion, a POSITA would have recognized that Yeung's accelerometer-detected wrist turn gesture could be a

"specific gesture" used to indicate a desire to wake up Orr-Orr682-Pasquero's wristwatch device. Indeed, in my opinion, a POSITA would have recognized that applying Yeung's teachings regarding activating device functionality upon the accelerometer's detection of a specific wristturn gesture into the Orr-Orr682Pasquero system would further Orr-Orr682's goals of confirming a user's intended input, reducing false positives, and, as a result, reducing the device's power consumption due to unintended activations. Moreover, in my opinion, a POSITA would have recognized a wristturn as a gesture that indicates a user's desire to interact with a watch because it moves the face of the watch into the user's direct line of sight. *See* Ex-1008 ¶47, Fig. 6. Thus, in my opinion, a POSITA would have been motivated to modify the Orr-Orr682-Pasquero system to add Yeung's teaching of an accelerometer-detected wristturn gesture.

208. In my opinion, modifying Orr-Orr682-Pasquero to include Yeung's wristturn-activation features would have been a straightforward engineering task for a POSITA as Orr, Orr682, Pasquero, and Yeung all disclose standard mobile computing devices that use accelerometers and/or touchscreens for input gesture detection. Indeed, Orr, Orr682, Pasquero, and Yeung disclose general purpose computing devices that work in the same general way and that, in my opinion, a POSITA would have understood were capable of using the same and/or similar programming languages and/or operating systems. Accordingly, in my opinion, a

POSITA would have had a reasonable expectation of success in implementing the approaches described in Yeung into the Orr-Orr682-Pasquero system as the implementation would have been a matter of using familiar elements and thus would have yielded predictable results. For example, Orr, Orr682, Pasquero, and Yeung all disclose the use of accelerometers, accompanying processors, and microcontrollers; using such components to detect and determine input gestures; and controlling such components and their input-gesture-detection mechanisms via software in order to reduce false inputs, all on a general purpose computing device. In my opinion, implementing each of these disclosures was well within the skills of a POSITA.

209. Furthermore, in my opinion, a POSITA would have had a reasonable expectation of success in combining the teachings of Orr, Orr682, Pasquero and Yeung. Orr, Orr682, and Yeung all purport to solve problems relevant to handheld electronic devices in similar and predictable ways—for example, Orr teaches a "two-stage approach" involving added confirmation for input gesture detection, Orr682 teaches a method to discriminate a purposeful tap from a false input in a portable electronic device using features inherent to a tap gesture, and Yeung teaches activating the device's functionality only upon detection of a specific gesture, namely, a wristturn. Ex-1005, 6:32-54; Ex-1006 ¶¶24-26, 28-31, 82-91; Ex-1008 ¶¶15, 36-37, 46. And Pasquero teaches a wristwatch capable of housing

all such functionality. Ex-1009, 2:29-30, 3:23-50, 9:10-38. In my opinion, a POSITA would have understood that the teachings of Orr, Orr682, Pasquero, and Yeung could have been combined with no change in the respective functions as Orr, Orr682, Pasquero, and Yeung teach compatible systems.

2. Dependent Claims 12-13

a. Claim 12: The method of claim 1, further comprising a step of detecting a wristturn with said accelerometer, and switching said wristwatch from said first power mode to said second power mode when a wristturn has been detected.

210. It is my opinion that Orr-Orr682-Pasquero in view of Yeung ("Orr-Orr682-Pasquero-Yeung") teaches Claim 12.

211. Yeung discloses a step of detecting a wristturn with the accelerometer, and switching the wristwatch from a first power mode to a second power mode when a wristturn has been detected: the wristwatch/audio recorder "activates audio recording" (i.e., switching the wristwatch from a first power mode to a second power mode) "only when" the device "is in a predetermined orientation and/or after it has completed a predetermined movement," as detected by the "three-axis accelerometer (i.e., detecting a wristturn with an accelerometer and switching the wristwatch's power mode when a wristturn has been detected). Ex-1008 ¶¶15, 36; *see also id.* ¶¶37-46 ("[C]ontroller 48" "uses the data stored in accelerometer-data memory 50 to compute the orientation and/or movement of audio recorder 30 and

activate[] an audio-recorder function … only if a predetermined orientation and/or movement is detected."). These "predetermined movement[s]" include a wristturn—"the natural movement of lifting the arm upwards from a resting position (i.e. from the side of the body or from in front of the lower end of the torso) and tilting the wrist towards the mouth," as shown in Figure 6. *Id.* ¶¶37, 4647, Fig. 6.

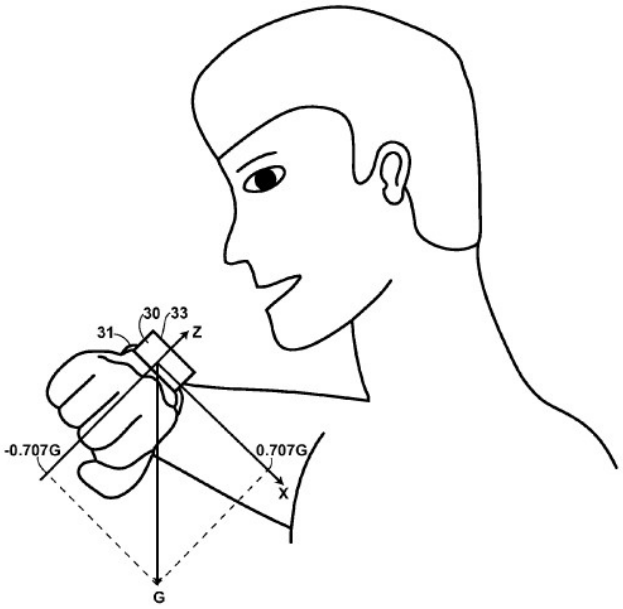

FIG. 6

In my opinion, a POSITA would have been motivated to apply Yeung's teachings regarding switching power modes based on a wristturn to the Orr-Orr682-Pasquero system, and would have had a reasonable expectation of success in doing so, for the reasons I discussed above.

b. Claim 13: The method of claim 12, said step of detecting a wristturn comprising:

detecting that an orientation of the wristwatch is in a first range;

detecting that the orientation of the wristwatch is then in a second range, different from said first range,

detecting that the wristwatch remains substantially immobile during a predetermined duration.

212. It is my opinion that Orr-Orr682-Pasquero-Yeung teaches Claim 13.

213. Yeung discloses activating certain functionality when the device's accelerometer detects a wristturn—"the natural movement of lifting the arm upwards from a resting position (i.e. from the side of the body or from in front of the lower end of the torso) and tilting the wrist towards the mouth." Ex-1008 ¶¶15, 36-37, 46-47. Yeung discloses detecting the orientation of the wristwatch is in a first range, namely, that the watch is "in a resting position" by "the side of the body" or "in front of the lower end of the torso." *Id.* ¶47. Thus, in my opinion, a POSITA would have appreciated that Yeung's "wristturn" gesture includes "detecting that an orientation of the wristwatch is in a first range."

214. Yeung discloses detecting that the orientation of the wristwatch is then in a second range, different from the first. Namely, Yeung detects "lifting the arm upwards" and "tilting the wrist towards the mouth," as shown in Figure 6. *Id.* In my opinion, a POSITA would have understood the orientation facing the mouth to be different from that when the arm is hanging by the user's side. Thus, in my

opinion, a POSITA would have appreciated that Yeung's "wristturn" gesture includes "detecting that the orientation of the wristwatch is then in a second range, different from said first range."

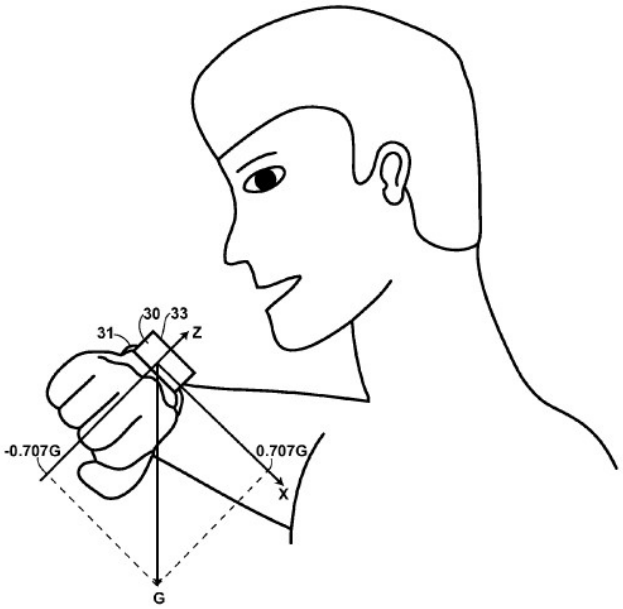

FIG. 6

215. And Yeung discloses detecting that the wristwatch remains substantially immobile during a predetermined duration. Yeung explains the wristwatch/audio recorder will "activate an audio-recorder function" only after the device "***remains in a static position for a predetermined period of time*** after a predetermined wrist and arm movement pattern has been detected." Ex-1008 ¶52. Thus, in my opinion, a POSITA would have appreciated that Yeung's "wristturn" gesture includes "detecting that the wristwatch remains substantially immobile during a predetermined duration."

F. Ground 6: Claims 1-5, 7, and 10-14 Are Obvious Over Orr In View of Orr682 In Further View of Yeung.

1. A POSITA would have been motivated to combine the teachings of Orr-Orr682 and Yeung, and would have had a reasonable expectation of success in doing so

216. In my opinion, a POSITA would have been motivated to combine the teachings of Orr-Orr682 with Yeung and would have had a reasonable expectation of success in doing so as each relates to input gesture detection using a touchscreen and/or accelerometer in a portable electronic device. Ex-1005, 9:2-7; Ex-1006 ¶91; Ex-1008 ¶¶15, 36. And Orr, Orr682, and Yeung all provide compatible systems, while disclosing various form factors. Ex-1005, Abstract, 1:14-22, 3:39-58; Ex1006, Abstract; Ex-1008 ¶¶5, 37. Orr-Orr682 teaches an "optimally … lightweight [and] compact" "electronic device" that uses an accelerometer to change power modes. Ex-1005, 1:14-22, 3:39-58, 8:64-9:7. Yeung teaches using "accelerometer based orientation and/or movement sensing" "to control wearable devices, such as … wristwatches," including by changing its power modes (Ex-1008 ¶¶5, 36-37, 47-48). Based on the teachings of Yeung, in my opinion, a POSITA would have recognized the feasibility of implementing the Orr-Orr682 system in a wristwatch. Indeed, similar to the devices disclosed in Orr and Orr682, Yeung discloses a wristwatch comprising "display 34" and "three-axis accelerometer 32." *See* Ex1008 ¶¶5, 37. Moreover, in my opinion, a POSITA

would have recognized that applying Yeung's teachings of implementing an electronic device using an accelerometer to change power modes in a wristwatch would have furthered Orr's goals of an "optimally … lightweight [and] compact" form factor (Ex-1005, 1:14-22).

217. In my opinion, a POSITA also would have been motivated to implement the combined Orr-Orr682 system on a wristwatch, such as disclosed by Yeung, as a POSITA would have understood that the combined Orr-Orr682, with its advanced tap-detection calculation abilities, possessed the required robustness and precision necessary to prevent unnecessary power mode switches based on unintentional movements associated with a wrist-worn device.

218. Moreover, as wristwatches having multiple power modes, motion detectors/accelerometers, and/or touchscreen displays were well-known in the art, in my opinion, a POSITA would have recognized the feasibility of implementing the Orr-Orr682 system in a wristwatch, as disclosed in Yeung. Indeed, for example, Fitzgerald discloses a wristwatch with a touchscreen that uses an accelerometer to switch between multiple power modes (Ex-1010, 2:66-3:2, 3:1827, 7:8-26, 11:28-46); Fyke discloses a wristwatch comprising a touch panel (Ex-1011 ¶¶23, 66); Louch discloses a wristwatch with a touchscreen interface (Ex1012 ¶49, Fig. 1F); Tecchiolli discloses a wrist-worn electronic device with a motion detector to facilitate switching between multiple power modes (Ex-1013, 1:4-10, 2:12-13,

9:27-10:5); Marvit911 discloses a wristwatch comprising an accelerometer (Ex-1014 ¶¶34-35, 43, 166); and Marvit528 discloses a wristwatch comprising an accelerometer and touchscreen (Ex-1015, Abstract, 1:34-62).

219. Furthermore, as wristwatches incorporating cellular telephony (as described by Orr (Ex-1005, 3:59-61)), were well-known in the art, in my opinion, a POSITA would have recognized the feasibility of implementing the Orr-Orr682 system in a wristwatch, as disclosed in Yeung. For example, by 1999, Samsung had introduced the SPH-WP10, a "smartphone and a watch in one" that "could last for 90 minutes of talk time and 60 hours on standby," as shown below. Ex-1021.

Image of Samsung SPH-WP10.

220. In 2009, Samsung released its S9110, its second "phone/watch hybrid," as shown below. *Id.* The S9110 could last for "more than four hours" of "talk time" and "had both a touch screen and physical buttons." *Id.*

Image of Samsung S9110.

221. LG debuted its GD910 "smartwatch phone," shown below, at CES 2008, which it released in 2009. *Id.* The GD910 featured a tempered glass" "diagonal screen," "voice recognition," and "text to speech." *Id.*

Image of LG GD910.

222. Moreover, for example, Cho discloses a "watch phone" comprising a "watch mode" in which the device's "touch screen panel" is "turn[ed] off" and an "idle mode" in which the "touch screen panel" is "turn[ed] on" (Ex-1017, Abstract); Chiang discloses a "watch-like cell phone," to be "fit[] … to a user's wrists," and to "display[] time" and "cell phone … information" (Ex-1018, Abstract); and Kim discloses a "wristwatch" "communication terminal" (Ex-1019 ¶¶19, 22-27).

223. Accordingly, in my opinion, a POSITA would have understood that applying Orr-Orr682 to Pasquero's wristwatch format would have been well within the capabilities of a POSITA and would have been a matter of ordinary engineering and not the product of innovation.

224. Furthermore, in my opinion, implementing Orr-Orr682 in the wristwatch form factor described in Yeung as the implementation would have been a straightforward engineering task for a POSITA, and thus would have yielded predictable results, as Orr, Orr682, and Yeung all disclose standard mobile computing devices that use accelerometers and/or touchscreens for input gesture detection. Indeed, Orr, Orr682, and Yeung disclose general purpose computing devices that work in the same general way and that, in my opinion, a POSITA would have understood were capable of using the same and/or similar programming languages and/or operating systems. Accordingly, in my opinion, a POSITA would have had a reasonable expectation of success in implementing the Orr-Orr682 system in the wristwatch form factor described in Yeung as the implementation would have been a matter of using familiar elements and thus would have yielded predictable results. For example, Orr, Orr682, and Yeung all disclose the use of accelerometers, accompanying processors, and microcontrollers; using such components to detect and determine input gestures; and controlling such components and their input-gesture-detection mechanisms via software, all on a general purpose computing device. In my opinion, implementing each of these disclosures was well within the skills of a POSITA. Furthermore, in my opinion, a POSITA would have understood that the teachings of Orr, Orr682,

and Yeung could have been combined with no change in the respective functions as Orr, Orr682, and Yeung teach compatible systems.

225. In my opinion, a POSITA would have been motivated to combine Yeung's teachings regarding specific methods for activating functionality based on using an accelerometer to detect a specific gesture, namely, a user's wristturn, to the Orr-Orr682 system for the same reasons I discussed for Ground 5 (Section XIII.E).

2. Claims 1-5, 7, and 10-14

226. It is my opinion that Orr-Orr682 in view of Yeung ("Orr-Orr682-Yeung") teaches Claims 1-5, 7, and 10-14.

227. Orr-Orr682, in view of Yeung, teaches Claims 1-5, 7, 10-11, and 14 for the same reasons I discussed for Ground 1 (Section XIII.A) and Claims 12-13 for the same reasons I discussed for Ground 5 (Section XIII.E). Yeung further provides an explicit disclosure of the wristwatch form factor recited in Claims 1-5, 7, and 10-14. In my opinion, a POSITA would have been motivated to implement the combined Orr-Orr682 system in the wristwatch form factor disclosed in Yeung, and would have had a reasonable expectation of success in doing so, for the reasons I discussed above. As shown in Figure 1, Yeung teaches using "accelerometer-based orientation and/or movement sensing" "to control wearable devices, such as … wristwatches," including by changing its power modes.

Ex1008 ¶¶5, 36-37, 47-48, Fig. 1. As in the devices described in Orr and Orr682, Yeung's wristwatch comprises "display 34" and "three-axis accelerometer 32." *See* Ex-1008 ¶¶5, 37.

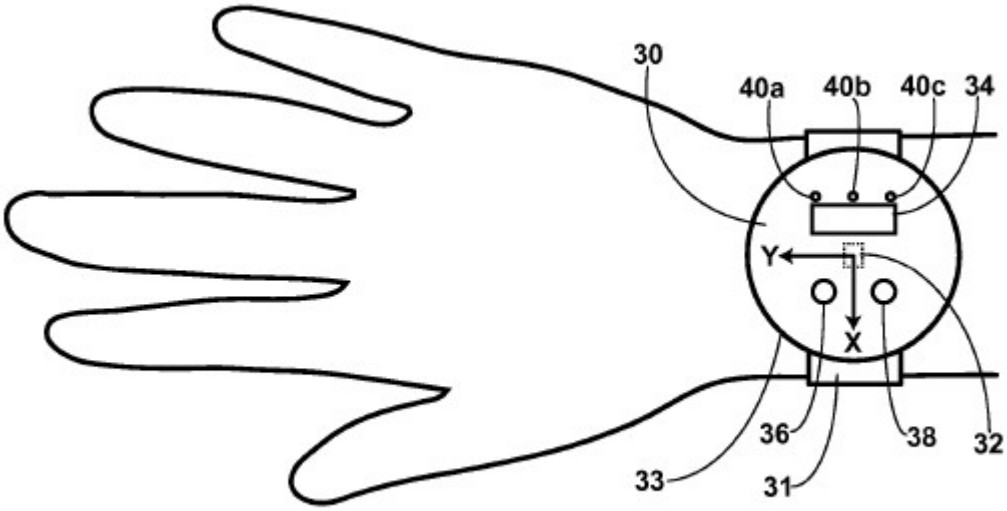

FIG. 1

228. Regarding Claim 12 ("The method of claim 1, further comprising a step of detecting a wristturn with said accelerometer, and switching said wristwatch from said first power mode to said second power mode when a wristturn has been detected."), Yeung discloses that its wristwatch/audio recorder "activates audio recording only when" the accelerometer detects that the device "is in a predetermined orientation and/or after it has completed a predetermined movement" such as a wristturn—"the natural movement of lifting the arm upwards from a resting position (i.e. from the side of the body or from in front of the lower

end of the torso) and ***tilting the wrist towards the mouth*** to activate audio recording," as shown in Figure 6. Ex-1005 ¶¶15, 36-37, 46-47, Fig. 6.

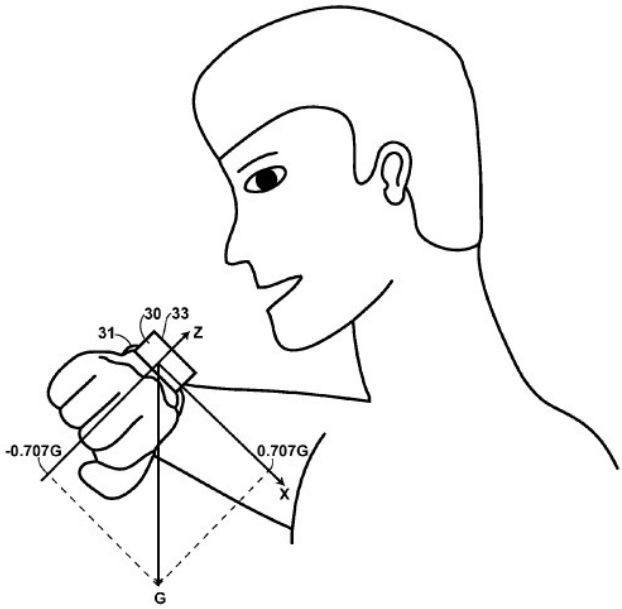

FIG. 6

229. Regarding Claim 13 ("The method of claim 12, said step of detecting a wristturn comprising: [a] detecting that an orientation of the wristwatch is in a first range; [b] detecting that the orientation of the wristwatch is then in a second range, different from said first range, [c] detecting that the wristwatch remains substantially immobile during a predetermined duration."), Yeung's wristturn detection involves [a] "determin[ing] orientation when the accelerometer is at rest" (i.e., that an orientation of the wristwatch is in a first range), then [b] determining that the device has been raised and "tilt[ed] towards the mouth" (i.e., that the orientation of the wristwatch is in a second range, different from said first range

when the arm was hanging by the user's side) (Ex-1008 ¶¶15, 39, 47-48), and finally [c] the wristwatch/audio recorder "***remains in a static position for a predetermined period of time*** after a predetermined wrist and arm movement pattern has been detected" (i.e., that the wrist remains substantially immobile during a predetermined duration). *Id.* ¶52; *see also id.* ¶¶ 15, 39, 47-48.

230. For these reasons, and for the reasons I discussed above with respect to Grounds 1 and 5, it is my opinion Orr-Orr682-Yeung renders obvious the wristwatch disclosed in Claims 1-5, 7, and 10-14.

XIV. CONCLUSION

231. For the reasons set forth above, I believe that Claims 1-15 of the '678 Patent are unpatentable in view of the prior art.

232. In signing this declaration, I understand that the declaration will be filed as evidence in a contested case before the Patent Trial and Appeal Board of the United States Patent and Trademark Office. I acknowledge that I may be subject to cross-examination in this case and that cross-examination will take place within the United States. If cross-examination is required of me, I will appear for cross-examination within the United States during the time allotted for cross examination.

233. I declare that all statements made herein of my knowledge are true, that all statements made on information and belief are believed to be true, and that these statements were made with the knowledge that willful false statements and the like so made are punishable by fine or imprisonment, or both, under Section 1001 of Title 18 of the United States Code.

234. I declare under penalty of perjury that the foregoing is true and correct.

Respectfully Submitted,

Benjamin B. Bederson