US008914075B2

(12) **United States Patent**
Pasquero et al.

(10) **Patent No.: US 8,914,075 B2**
(45) **Date of Patent: Dec. 16, 2014**

(54) **ELECTRONIC DEVICE INCLUDING ACTUATOR AND METHOD OF CONTROLLING SAME FOR PROVIDING TACTILE OUTPUT**

(75) Inventors: **Jerome Pasquero**, Kitchener (CA); **Scott James Stobbe**, Kitchener (CA); **Steven Henry Fyke**, Waterloo (CA)

(73) Assignee: **BlackBerry Limited**, Waterloo (CA)

(*) Notice: Subject to any disclaimer, the term of this patent is extended or adjusted under 35 U.S.C. 154(b) by 1034 days.

(21) Appl. No.: **12/884,522**

(22) Filed: **Sep. 17, 2010**

(65) **Prior Publication Data**

US 2012/0071092 A1 Mar. 22, 2012

(51) **Int. Cl.**

H04M 1/00	(2006.01)
H04B 1/38	(2006.01)
G06F 3/01	(2006.01)
H04M 1/725	(2006.01)

(52) **U.S. Cl.**

CPC ***H04M 1/7253*** (2013.01); ***G06F 3/016*** (2013.01); *H04M 2250/22* (2013.01)

USPC **455/567**; 455/412.1; 455/412.2; 455/41.2; 455/41.3; 455/550.1; 455/566; 340/407.1; 340/407.2

(58) **Field of Classification Search**

USPC 455/41.2, 41.3, 412.1, 550.1, 566, 567, 455/90.1, 412.2; 340/7.58, 7.59, 7.6, 407.1, 340/407.2

See application file for complete search history.

(56) **References Cited**

U.S. PATENT DOCUMENTS

4,044,350	A	8/1977	Tretiakoff et al.	
7,016,707	B2	3/2006	Fujisawa et al.	
7,130,664	B1	10/2006	Williams	
7,155,241	B2 *	12/2006	Helferich	455/458
7,289,315	B2	10/2007	Hillman et al.	
7,835,757	B2 *	11/2010	Helferich	455/458
7,880,729	B2	2/2011	Lynch et al.	
8,077,019	B2 *	12/2011	Hofmann et al.	340/407.1
8,131,275	B2 *	3/2012	Kwak et al.	455/414.3
8,180,296	B2 *	5/2012	Flaherty	455/41.3
8,315,652	B2 *	11/2012	Grant et al.	455/466
8,519,834	B2	8/2013	Jersa et al.	
2002/0112914	A1	8/2002	Abe et al.	
2002/0121966	A1 *	9/2002	Woodard et al.	340/384.6
2003/0038729	A1	2/2003	Dunsmore et al.	

(Continued)

FOREIGN PATENT DOCUMENTS

DE	102008056751	5/2010
JP	5917881	9/1984

(Continued)

OTHER PUBLICATIONS

Examiner's Report dated Dec. 20, 2013, issued on corresponding Canadian patent application No. 2,752,323.

(Continued)

Primary Examiner — Tuan A Tran

(74) *Attorney, Agent, or Firm* — Geoffrey deKleine; Borden Ladner Gervais LLP

(57) **ABSTRACT**

A method of controlling an electronic device includes detecting receipt of an input, determining a response number in response to receipt of the input, and actuating an actuator of the electronic device a discrete integer number of times based on the response number.

14 Claims, 10 Drawing Sheets

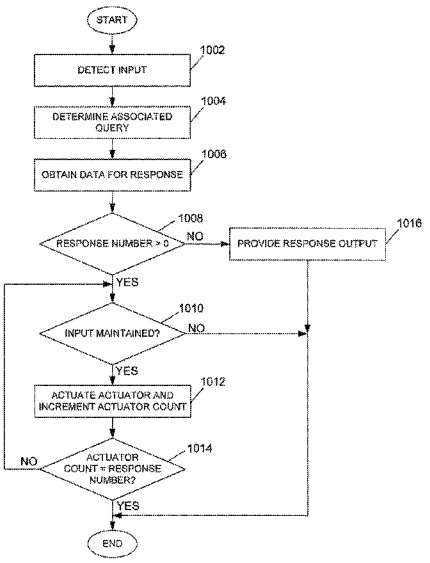

(56) **References Cited**

U.S. PATENT DOCUMENTS

2003/0151982	A1	8/2003	Brewer et al.	
2004/0201317	A1	10/2004	Wong	
2005/0133347	A1	6/2005	Hein	
2005/0152325	A1	7/2005	Gonzales	
2006/0092177	A1	5/2006	Blasko	
2007/0052691	A1	3/2007	Zadesky et al.	
2007/0057913	A1*	3/2007	Eid et al.	345/156
2007/0125636	A1	6/2007	Karan et al.	
2007/0236450	A1	10/2007	Colgate et al.	
2007/0265800	A1	11/2007	Sugai	
2008/0062143	A1	3/2008	Shahoian et al.	
2008/0100177	A1	5/2008	Dai et al.	
2008/0192976	A1	8/2008	Kim	
2008/0238879	A1	10/2008	Jaeger et al.	
2009/0072955	A1	3/2009	Cary	
2009/0074224	A1	3/2009	Wright	
2009/0115734	A1	5/2009	Fredriksson et al.	
2009/0180646	A1	7/2009	Vulfson et al.	
2009/0313542	A1	12/2009	Cruz-Hernandez et al.	
2010/0086151	A1	4/2010	Ruiter	
2010/0312521	A1	12/2010	Sugai	
2011/0210834	A1*	9/2011	Pasquero et al.	340/407.1
2012/0044062	A1	2/2012	Jersa et al.	
2012/0087523	A1	4/2012	Gerkinsmeyer	

FOREIGN PATENT DOCUMENTS

JP	5288868	11/1993
JP	7218663	8/1995
WO	2004/053830 A1	6/2004

OTHER PUBLICATIONS

The Search and Examination Report dated Feb. 14, 2011, issued in respect of the corresponding European application.

Wang, Q. et al., "Biomechanically Optimized Distributed Tactile Transducer Based on Lateral Skin Deformation" Haptics Laboratory, Center for Intelligent Machines, McGill University, Montreal, Canada, published at least as early as Apr. 2010.

http://www.touchuserinterface.com/2009/04/touch-screens-and-vision-impaired.html, published at least as early as Apr. 1, 2009.

http://www.newscientist.com/article/mg20127015.700-vibrating-touch-screen-puts-braille-at-the-fingertips.html, published at least as early as Mar. 31, 2009.

www.edn.com/article/459376-Touch_screen_controller_provides_tactile_feedback.phps, published at least as early as Aug. 6, 2009.

www.pacinian.com/file_viewer.php?id=215, published at least as early as Oct. 2009.

http://www.phoenix.tc-ieee.org/004_Piezo_Film_Blood_Flow_Sensor/Phoenix_PiezoPulse.htm, published at least as early as Sep. 19, 2005.

http://www.yankodesign.com/2007/08/07/all-in-one-haptic-phone/, published at least as early as Aug. 2007.

Blasko et al., "An Interaction System for Watch Computers Using Tactile Guidance and Bidirectional Segmented Strokes", Eighth International Symposium on Wearable Computers , ISWC, Oct. 31-Nov. 3, 2004, pp. 120-123.

Kim et al., "The Gesture Watch: A Wireless Contact-free Gesture based Wrist Interface", 11th IEEE International Symposium on Wearable Computers, Boston, MA, Oct. 11-13, 2007, pp. 15-22.

Lee et al., "Mobile Gesture Interaction Using Wearable Tactile Displays", CHI 2009, Student Research Competition, Boston, MA, Apr. 4-9, 2009, pp. 3437-3442.

European Patent Application No. 10172092.8, European Search Report dated Jan. 12, 2011.

* cited by examiner

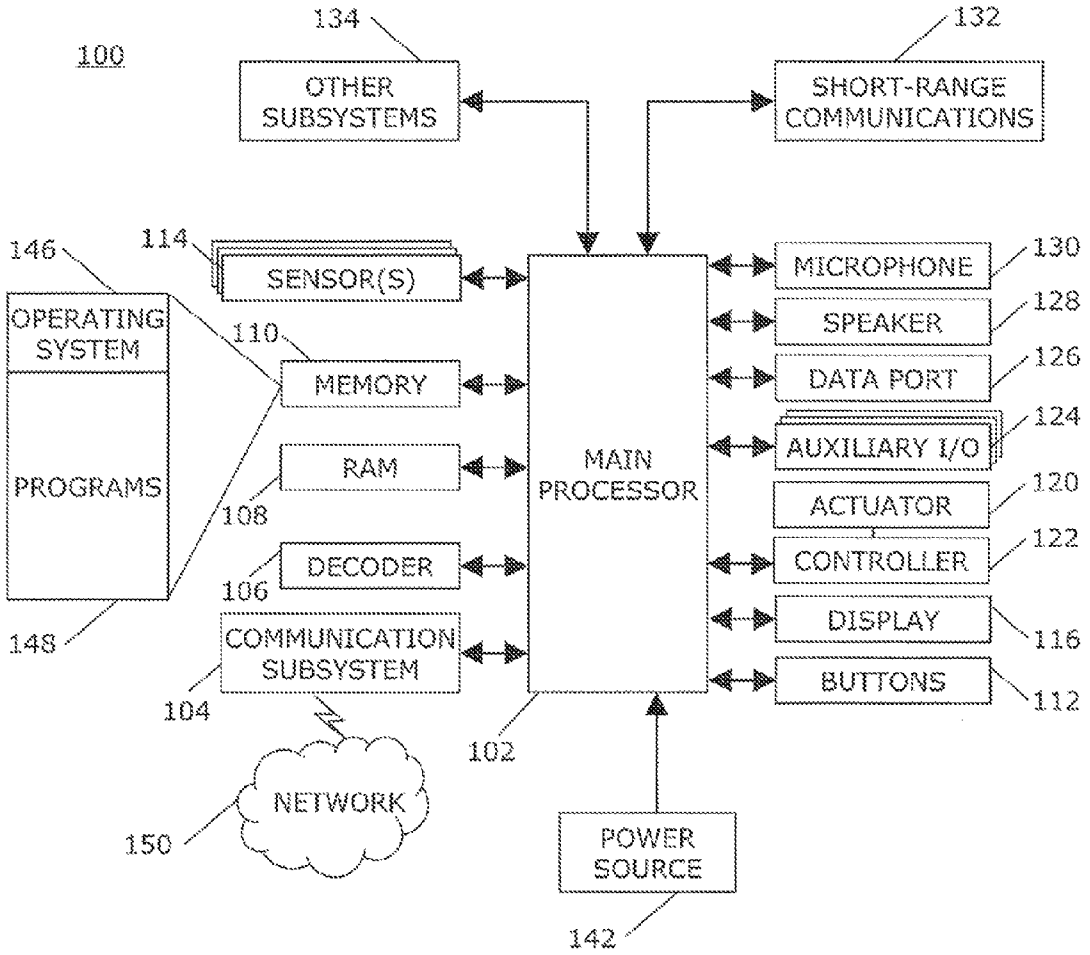
100
134
OTHER SUBSYSTEMS
132
SHORT-RANGE COMMUNICATIONS
146
114
SENSOR(S)
OPERATING SYSTEM
110
MEMORY
PROGRAMS
RAM
108
DECODER
106
148
COMMUNICATION SUBSYSTEM
104
NETWORK
150
MAIN PROCESSOR
102
POWER SOURCE
142
MICROPHONE
130
SPEAKER
128
DATA PORT
126
AUXILIARY I/O
124
ACTUATOR
120
CONTROLLER
122
DISPLAY
116
BUTTONS
112

FIG. 1

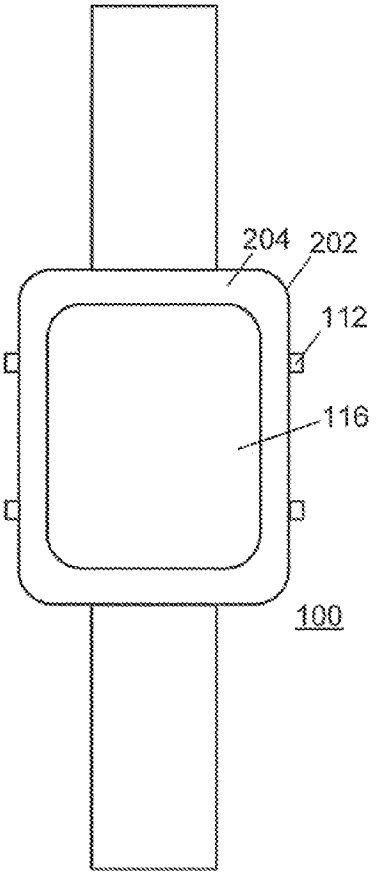

FIG. 2

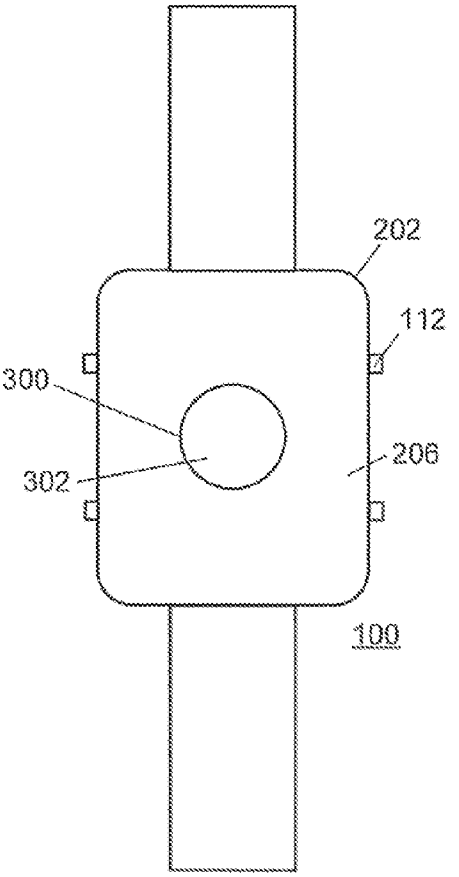

FIG. 3

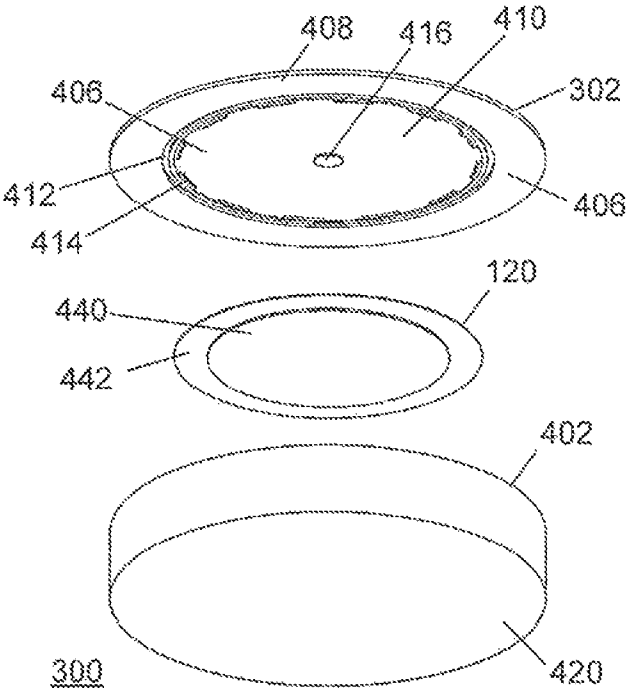
408
416
410
406
302
412
406
414
120
440
442
402
300
420

FIG. 4

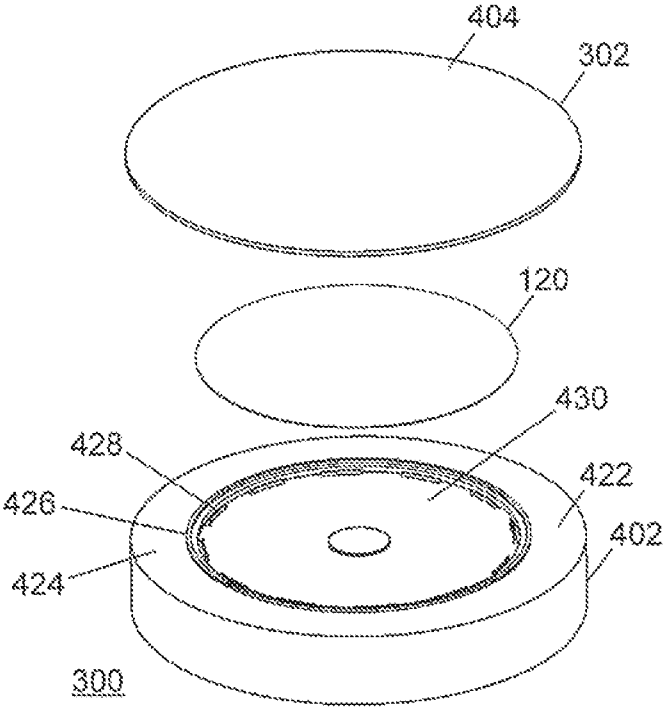
404
302
120
430
428
422
426
402
424
300

FIG. 5

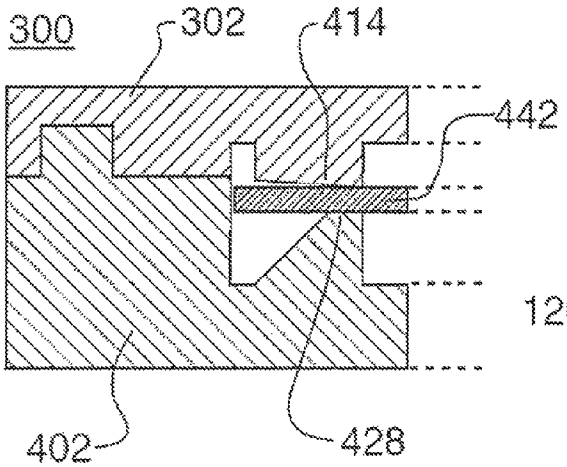

FIG.6

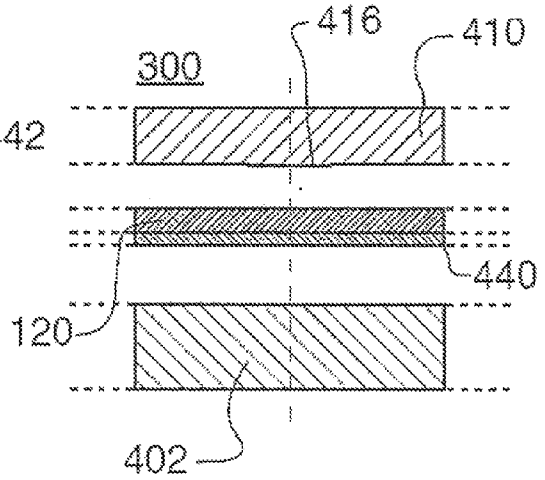

FIG.7

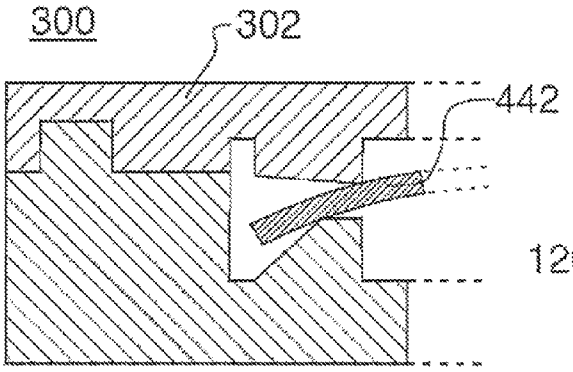

FIG.8

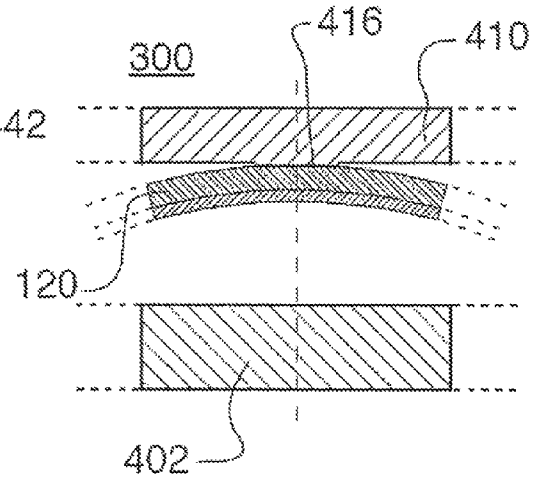

FIG.9

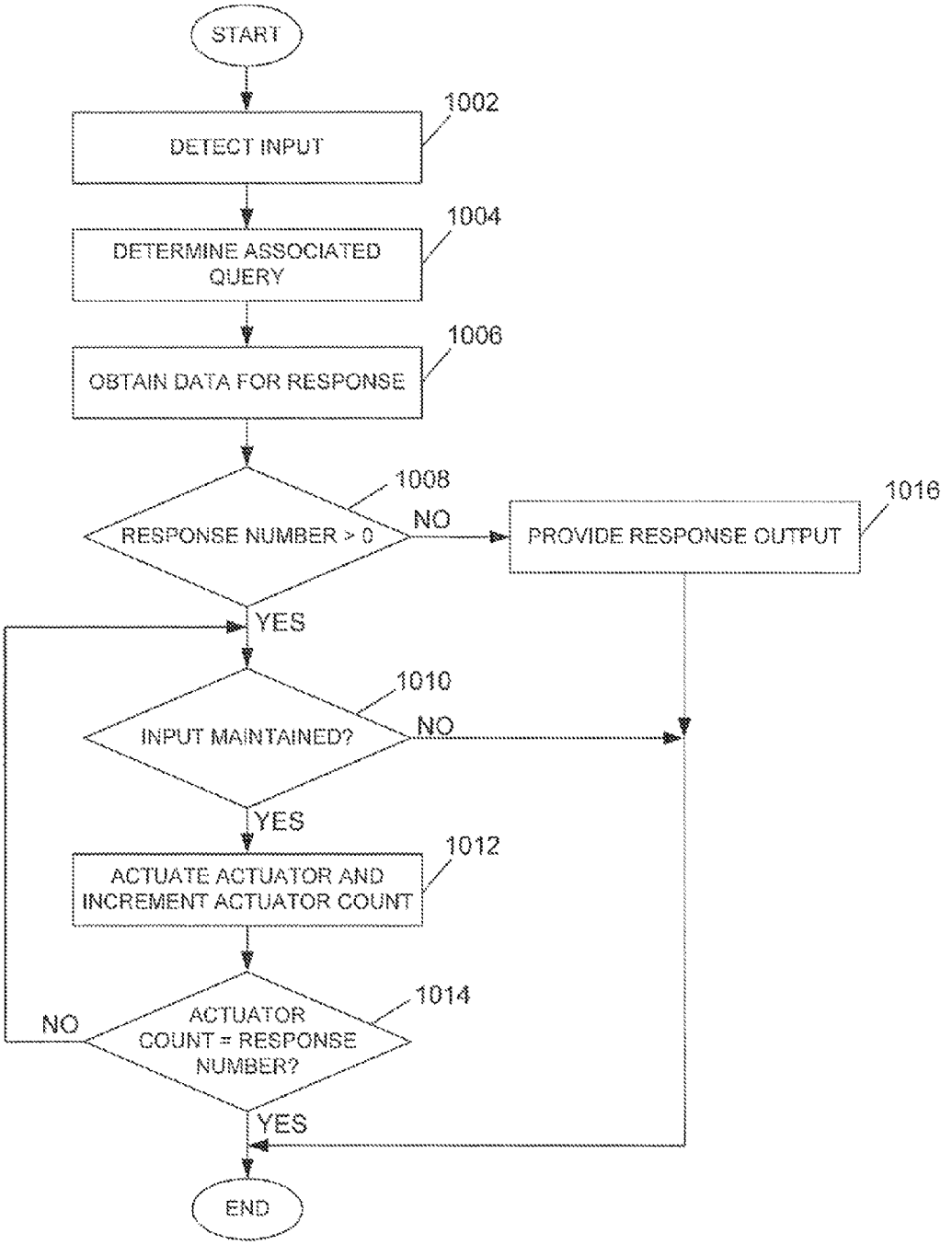
START
DETECT INPUT
1002
DETERMINE ASSOCIATED QUERY
1004
OBTAIN DATA FOR RESPONSE
1006
RESPONSE NUMBER > 0
1008
NO
PROVIDE RESPONSE OUTPUT
1016
YES
INPUT MAINTAINED?
1010
NO
YES
ACTUATE ACTUATOR AND INCREMENT ACTUATOR COUNT
1012
ACTUATOR COUNT = RESPONSE NUMBER?
1014
NO
YES
END

FIG. 10

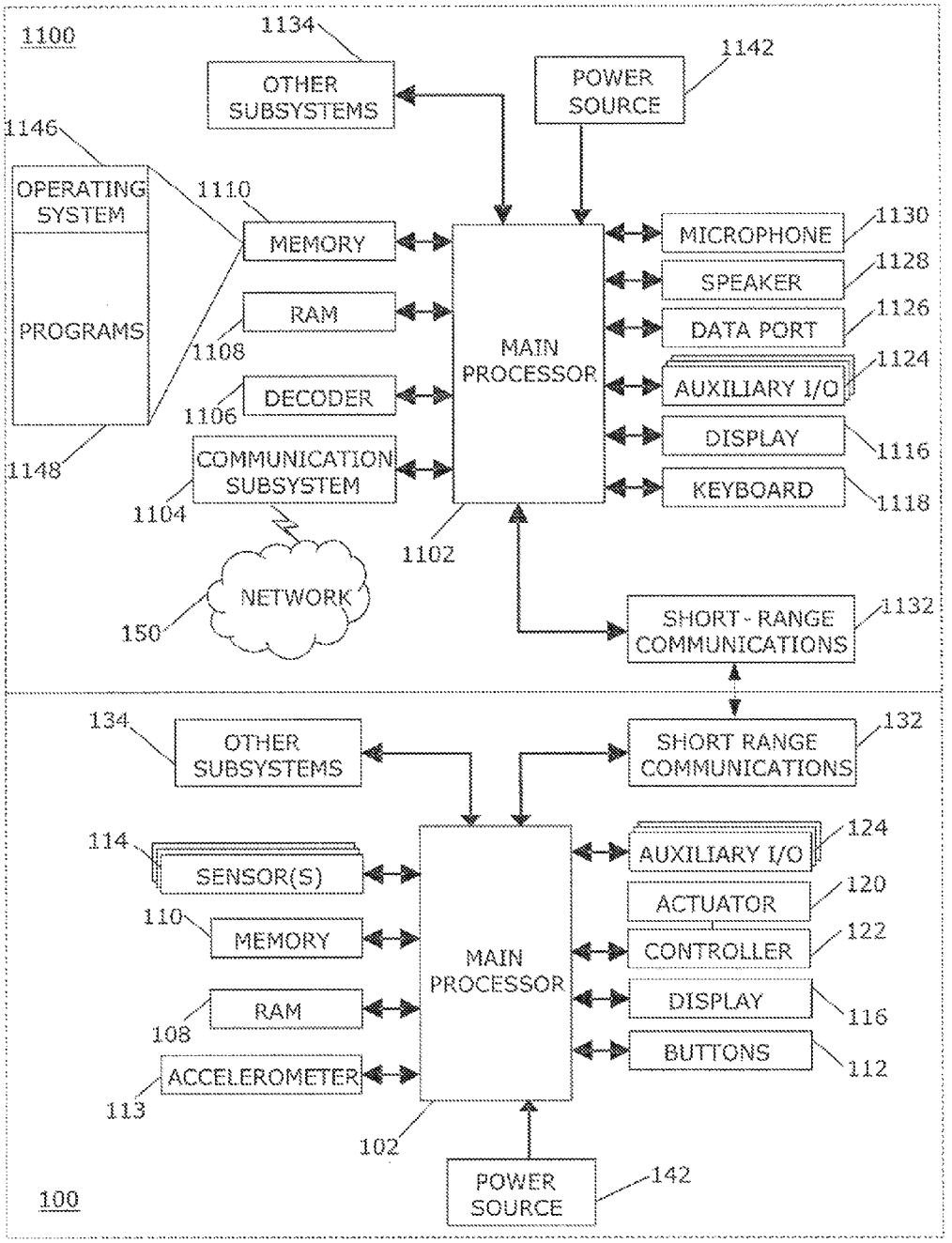
1100
1134
OTHER SUBSYSTEMS
POWER SOURCE
1142
1146
OPERATING SYSTEM
PROGRAMS
1110
MEMORY
RAM
1108
DECODER
1106
COMMUNICATION SUBSYSTEM
1104
1148
MAIN PROCESSOR
1102
MICROPHONE
1130
SPEAKER
1128
DATA PORT
1126
AUXILIARY I/O
1124
DISPLAY
1116
KEYBOARD
1118
NETWORK
150
SHORT - RANGE COMMUNICATIONS
1132
134
OTHER SUBSYSTEMS
SHORT RANGE COMMUNICATIONS
132
114
SENSOR(S)
110
MEMORY
RAM
108
ACCELEROMETER
113
MAIN PROCESSOR
AUXILIARY I/O
124
ACTUATOR
120
CONTROLLER
122
DISPLAY
116
BUTTONS
112
102
POWER SOURCE
142
100

FIG. 11

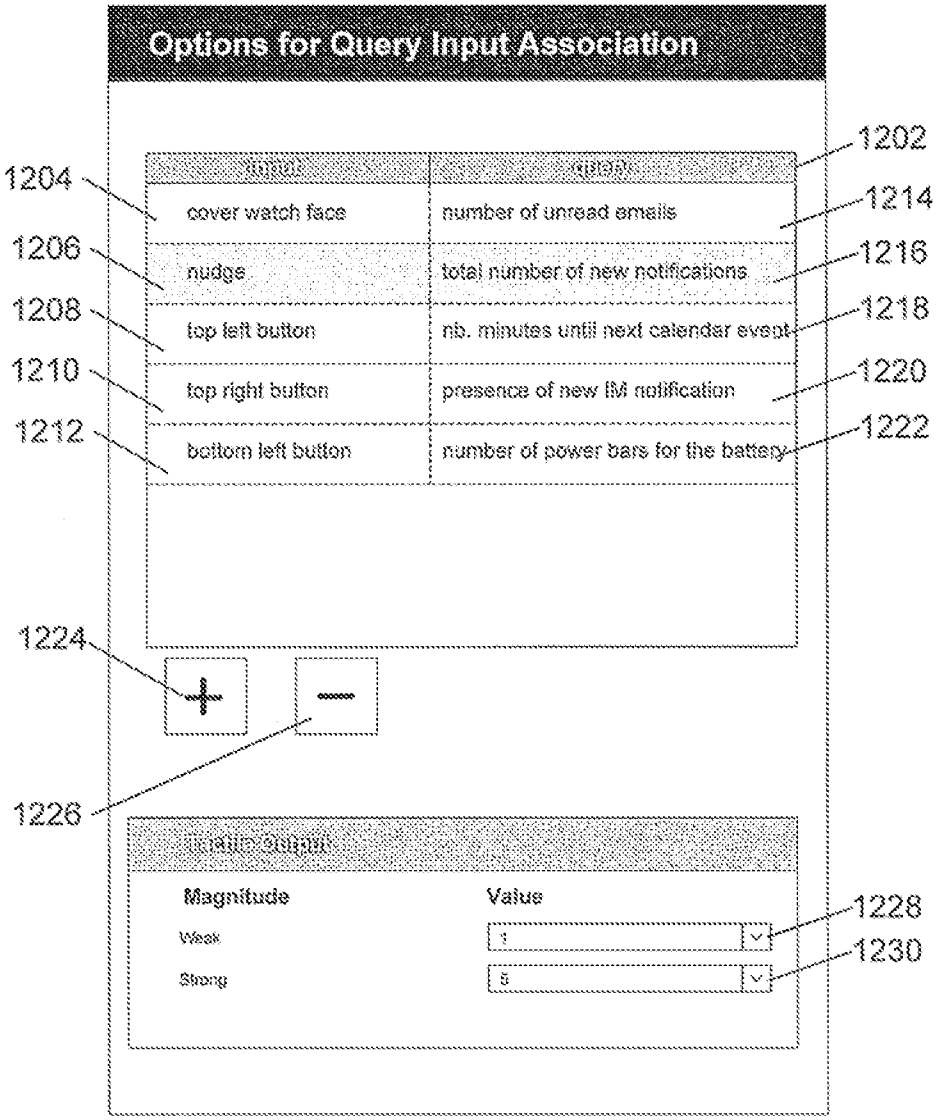
Options for Query Input Association
1202
1204
1206
1208
1210
1212
1214
1216
1218
1220
1222
cover watch face
number of unread emails
nudge
total number of new notifications
top left button
nb. minutes until next calendar event
top right button
presence of new IM notification
bottom left button
number of power bars for the battery
1224
1226
Magnitude
Value
Weak
1
Strong
5
1228
1230

FIG. 12

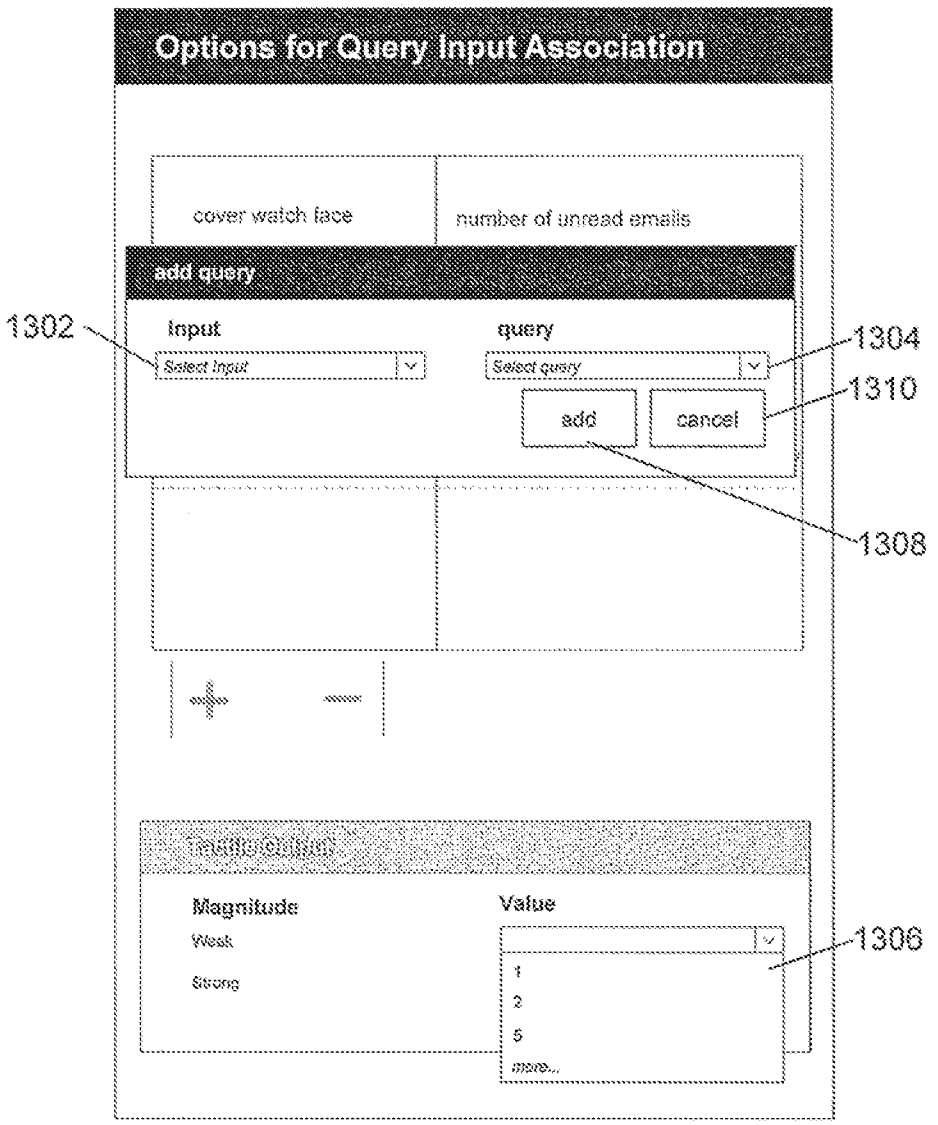
Options for Query Input Association
cover watch face
number of unread emails
add query
1302
Input
Select Input
query
Select query
1304
add
cancel
1310
1308
Magnitude
Weak
Strong
Value
1
2
5
more...
1306

FIG. 13

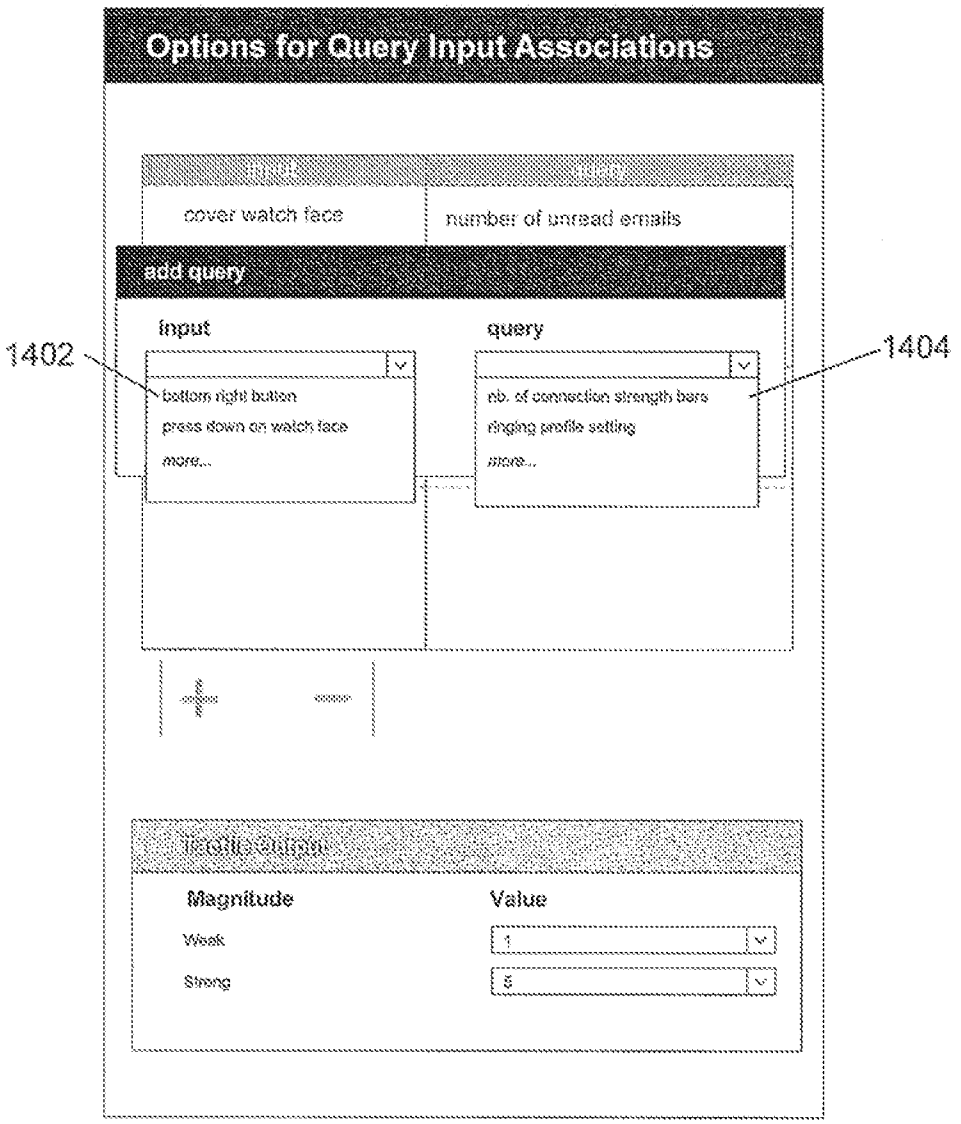
Options for Query Input Associations
cover watch face
number of unread emails
add query
input
query
1402
1404
bottom right button
press down on watch face
more...
no. of connection strength bars
ringing profile setting
more...
Magnitude
Value
Weak
1
Strong
5

FIG. 14

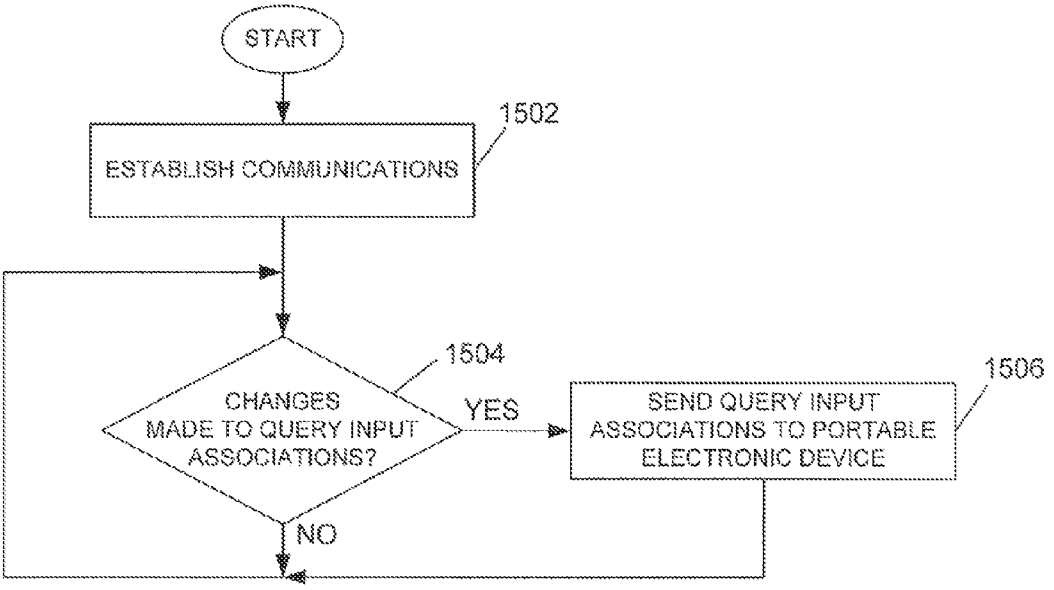
START
ESTABLISH COMMUNICATIONS
1502
CHANGES MADE TO QUERY INPUT ASSOCIATIONS?
1504
YES
NO
SEND QUERY INPUT ASSOCIATIONS TO PORTABLE ELECTRONIC DEVICE
1506

FIG. 15

ELECTRONIC DEVICE INCLUDING ACTUATOR AND METHOD OF CONTROLLING SAME FOR PROVIDING TACTILE OUTPUT

FIELD OF TECHNOLOGY

The present disclosure relates to a method of controlling an electronic device including an actuator for providing tactile output.

BACKGROUND

Electronic devices, including portable electronic devices, have gained widespread use and may provide a variety of functions including, for example, telephonic, electronic text messaging and other personal information manager (PIM) application functions. Portable electronic devices can include several types of devices including mobile stations such as simple cellular phones, smart phones, Personal Digital Assistants (PDAs) in various forms, and peripheral devices for communicating with PDAs.

Devices such as PDAs or smart phones are generally intended for handheld use and ease of portability. Smaller devices are generally desirable for portability. Peripheral devices such as watches or other peripheral devices that may communicate with PDAs or other electronic devices are desirable for their small overall size and convenience.

Improvements in control of such electronic devices are desirable.

BRIEF DESCRIPTION OF THE DRAWINGS

Embodiments of the present disclosure will now be described, by way of example only, with reference to the attached Figures, wherein:

FIG. **1** is a simplified block diagram of components including internal components of a portable electronic device according to an example embodiment;

FIG. **2** is a front view of an example of a portable electronic device;

FIG. **3** is a back view of an example of a portable electronic device;

FIG. **4** is an exploded view of an example actuator assembly of the portable electronic device in accordance with an example embodiment;

FIG. **5** is another exploded view of the example actuator assembly of the portable electronic device;

FIG. **6** is a partial sectional view at an edge of the actuator assembly, when the actuator is not actuated;

FIG. **7** is a partial sectional view at a center of the actuator assembly, when the actuator is not actuated;

FIG. **8** is a partial sectional view at an edge of the actuator assembly, when the actuator is actuated;

FIG. **9** is a partial sectional view at center of the actuator assembly, when the actuator is actuated;

FIG. **10** is a flowchart illustrating an example of a method of controlling a portable electronic device;

FIG. **11** is a simplified block diagram of components of a portable electronic device in short-range communication with a second electronic device, according to an example embodiment;

FIG. **12**, FIG. **13**, and FIG. **14** illustrate example screen shots of the display of the second electronic device during configuring the portable electronic device; and

FIG. **15** is a flowchart illustrating an example of a method of controlling a portable electronic device utilizing a second electronic device, in accordance with an embodiment.

DETAILED DESCRIPTION

The following describes a method of controlling an electronic device. The method includes detecting receipt of an input, determining a response number in response to receipt of the input, and actuating an actuator of the electronic device a discrete integer number of times based on the response number.

It will be appreciated that for simplicity and clarity of illustration, where considered appropriate, reference numerals may be repeated among the figures to indicate corresponding or analogous elements. In addition, numerous specific details are set forth in order to provide a thorough understanding of the example embodiments described herein. However, it will be understood by those of ordinary skill in the art that the example embodiments described herein may be practiced without these specific details. In other instances, well-known methods, procedures and components have not been described in detail so as not to obscure the example embodiments described herein. Also, the description is not to be considered as limited to the scope of the example embodiments described herein.

FIG. **1** shows a simplified block diagram of components including internal components of one example of a portable electronic device. The portable electronic device **100**, which may be in the form of, for example, a watch, includes multiple components such as a processor **102** that controls the operations of the portable electronic device **100**. Communication functions, including data and voice communications, are performed through a communication subsystem **104**. Data received by the portable electronic device **100** is decompressed and decrypted by a decoder **106**. The communication subsystem **104** receives messages from and sends messages to a wireless network **150**. The wireless network **150** may be any type of wireless network, including, but not limited to, data-centric wireless networks, voice-centric wireless networks, and dual-mode networks that support both voice and data communications over the same physical base stations. The portable electronic device **100** is a battery-powered device and includes a power source **142** such as a rechargeable battery or batteries.

The processor **102** also interacts with additional subsystems such as a Random Access Memory (RAM) **108**, memory **110**, buttons **112**, sensors **114**, a display **116**, an actuator **120**, an auxiliary input/output (I/O) subsystem **124**, a data port **126**, a speaker **128**, a microphone **130**, short-range communications **132** and other device subsystems **134**. User interaction with the graphical user interface of the portable electronic device **100** is performed through the buttons **112** and the sensors **114**. The processor **102** may interact with the actuator **120** through a controller **122**. The processor **102** may interact with the sensors **114** via an electronic controller. Information, such as text, characters, symbols, images, icons, and other items that may be displayed or rendered on a portable electronic device, is displayed on the display **116** via the processor **102**.

To identify a subscriber for network access according to the present embodiment, the portable electronic device **100** may use a Subscriber Identity Module or a Removable User Identity Module (SIM/RUIM) card for communication with a network such as the wireless network **150**. Alternatively, user identification information may be programmed into memory **110**.

The portable electronic device **100** includes an operating system **146** and software programs or components **148** that are executed by the processor **102** and are typically stored in a persistent, updatable store such as memory **110**. Additional applications or programs may be loaded onto the portable electronic device **100** through the wireless network **150**, the auxiliary I/O subsystem **124**, the data port **126**, the short-range communications subsystem **132**, or any other suitable subsystem **134**.

In use, a received signal such as a text message, an e-mail message, or web page download is processed by the communication subsystem **104** and input to the processor **102**. The processor **102** then processes the received signal for output to the display **112** or alternatively to the auxiliary I/O subsystem **124**. A subscriber may also compose data items, such as e-mail messages, for example, which may be transmitted over the wireless network **150** through the communication subsystem **104**. For voice communications, the overall operation of the portable electronic device **100** is similar. The speaker **128** outputs audible information converted from electrical signals, and the microphone **130** converts audible information into electrical signals for processing.

The sensors **114** may be any suitable sensors such as capacitive sensors including a capacitive sensor layer or layers of suitable material such as indium tin oxide (ITO). The sensors **114** may be located on a periphery of the face of the portable electronic device **100**, as illustrated in the front view of the portable electronic device shown in FIG. **2**. One or more touches, on the touch sensors, also known as touch contacts or touch events, may be detected. A location of the touch may be determined based on the sensor at which the touch is detected. A signal is provided to the controller **116** in response to detection of a touch. A touch may be detected from any suitable object, such as a finger or thumb. The electronic controller, through which the sensors interact with the processor **102**, and/or the processor **102** may detect a touch and multiple simultaneous touches may be detected.

Referring to FIG. **2** and FIG. **3**, a front view and back view of the portable electronic device **100**, which in the present embodiment is in the shape of a watch and is normally worn at or near the wrist of a user, are shown. The portable electronic device **100** includes a housing **202** that houses the internal components shown and described above with reference to FIG. **1**. The housing **202** includes a front frame **204** and a back **206**, joined by sidewalls that extend between the front frame **204** and the back **206**. The housing **202** may be made of any suitable material such as, for example, a high density plastic. The front frame **204** frames the display **116** and the sensors **114** (shown in FIG. **1**) are distributed on or around the front frame **204**.

In the example shown in FIG. **2** and FIG. **3**, four buttons **112** extend from two opposing sidewalls, although any suitable number of buttons may be utilized. Alternatively, the portable electronic device **100** may be without such buttons.

The back **206** of the portable electronic device **100** in the example shown in FIG. **2** and FIG. **3**, includes an opening through which a cover **302** of an actuator assembly **300** is exposed. In the present example, the opening is circular and the actuator assembly **300** is disposed in the opening such that an outer surface of a cover of the actuator assembly **300**, is generally flush with the remainder of the back **206** of the portable electronic device **100**. Alternatively, the cover may extend across the entire back of the portable electronic device **100** rather than at an opening in the back.

FIG. **4** and FIG. **5** show exploded perspective views of an example of the actuator assembly **300**, including the cover **302**, the actuator **120**, and a base **402**. As described, the cover **302** is exposed at the back **206** of the housing **202** (shown in FIG. **3**) of the portable electronic device **100**. The cover **302** is supported by and coupled to the base **402**. The actuator **120** is disposed between the base **402** and the cover **302**.

The cover **302** is generally planar on the outer surface **404**, which is exposed at the back **206** of the housing **202** (shown in FIG. **3**). Alternatively, the cover **302** is shaped, for example, to fit or curve around a wrist. The inner surface **406** is shaped to provide support and flexibility. The inner surface **406** of the cover **302** includes a peripheral rim **408** that is thick to provide support for a flexible membrane **410** which is centered within and coaxial with the rim **408**. The rim **408** includes a groove **412** that extends around the rim **408** to mate with a cylindrical projection from the base **402**. A plurality of spaced apart raised lips **414** on the inner surface **406**, extend around the margin of the membrane **410**. A cylindrical protrusion **416** extends from a center of the membrane **410** on the inner surface **406**. The membrane **410** is thin compared to the rim **408**, the raised lips **414** and the cylindrical protrusion **416**, to facilitate elastic deformation of the membrane **410**, for example, when a force is imparted to the cylindrical protrusion **416**. The cover **302** is greater in thickness at the cylindrical protrusion **416** than at the remainder of the membrane **410** to provide a reinforced area at which the actuator strikes the cover **302**.

The base **402** is generally planar on an outer surface **420**, on an opposite side of the base **402** as the cover **302**. The inner surface **422** includes a peripheral rim **424** that includes a tongue **426** that protrudes from and extends around an interior edge of the peripheral rim **424**. The tongue **426** is sized and shaped to mate with the groove **412** of the cover **302**. A plurality of spaced apart teeth **428** extend around the margin of a tray **430** which is centered within a coaxial with the rim **424**. The teeth **428** are sized, shaped, and located to cooperate with the raised lips **414** of the cover **302** and spaced therefrom, to clamp the actuator **120** therebetween. The base **402** is sized to support the actuator **120** and the cover **302**, and is supported within the housing **202** of the portable electronic device **100**. Alternatively, the base **402** may be incorporated into the housing.

The actuator **120** includes a piezoelectric disk **440** such as a PZT ceramic disk adhered to a metal substrate **442** of larger diameter than the piezoelectric disk **440** for bending when the piezoelectric disk **440** contracts diametrically as a result of build up of charge across the piezoelectric disk **440**. The actuator **120** is electrically connected to a piezo driver that communicates with the controller **122**. The controller **122** may be a microcontroller that communicates with the processor **102**. Alternatively, the processor **102** may control the actuator **120**. The controller **122** controls the piezo driver that controls the current/voltage to the piezoelectric disk **440** of the actuator **120**. When the charge is reduced by a discharge current/voltage, the actuator **120** returns to the state in which the actuator is not actuated, i.e., the actuator **120** is not bent.

Reference is now made to FIG. **6** and FIG. **7**, which show partial sectional views at an edge of the example of the actuator assembly **300** and a center of the actuator assembly **300**, respectively. The membrane **410** is spaced from the base **402**. The metal substrate **442** of the actuator **120** is disposed between the teeth **428** of the base **402** and the raised lips **414** of the cover **302** such that the actuator is spaced from the membrane **410** when the actuator **120** is not actuated, as illustrated in FIG. **7**. Referring now to FIG. **8** and FIG. **9**, which show partial sectional views of one side of the actuator assembly **300** and a center of the actuator assembly **300**, respectively, when the actuator **120** is actuated. The current/voltage to the actuator **120** is controlled by the controller to

increase the charge across the piezoelectric disk **440** of the actuator **120** and thereby actuate the actuator **120** over a very short period of time. The actuator **120** bends when the charge across the piezoelectric disk increases and the actuator **120** strikes the cylindrical protrusion **416** in the center of the membrane **410**.

A flowchart illustrating a method of controlling the portable electronic device **100** is shown in FIG. **10**. The method may be carried out by software executed, for example, by the processor **102** in communication with the controller of the actuator **120**. Coding of software for carrying out such a method is within the scope of a person of ordinary skill in the art given the present description. The method may contain additional or fewer processes than shown and/or described.

Input is detected at **1002**. The input may be any suitable input such as, for example, a touch detected at the sensors **114**. The touch may be any suitable touch including, for example, a touch on one sensor **114**, a touch on multiple sensors **114**, or a gesture on the sensors **114**. The input received may be matched to a query at **1004**. The query may be a query for any suitable information such as, the number of unopened electronic messages received, the number of new messages received, whether or not a calendar event record occurs within a time period, the number of calendar event records for a time period, a number of received phone calls, a number of minutes until the next scheduled calendar event, distance to a destination utilizing, for example, GPS or short-range communications **132** with a second electronic device, an indication of battery life remaining, for example, in percentage or a number of bars, strength of network connection in number of bars, a time of day, or any other suitable information. A single query may be associated with input or the query may be determined utilizing, for example, a look-up table to determine an associated query. Response data is obtained at **1006**. The response data may be obtained from the portable electronic device **100** or may be obtained from a second electronic device, for example, in wireless communication with the portable electronic device **100**.

When the response data, which in this example, is a number, is zero at **1008**, a response output may optionally be provided at **1016**. The response output may be, for example, vibration utilizing, for example, the actuator **120** or utilizing a vibration motor. The response output provides feedback that the input is received and differs from actuation of the actuator **120** a discrete number of times to reduce the chance of confusion between an output indicating zero and an output indicating a number that is greater than zero. For example, the vibration may be longer in duration than actuation of the actuator to strike the membrane to provide distinct output.

When the response number is greater than zero, the process continues at **1010**. When the input is not maintained and therefore is no longer detected at **1010**, the process ends. When the input detected at **1002** is maintained and therefore, still detected at **1010**, the process continues at **1012**. The actuator **120** is actuated at **1012** to provide a notification in the form of tactile output for the user. When the actuator **120** is actuated at **1012**, an actuator count, which may be the number of times that the actuator **120** is actuated in response to the detected input, is incremented, for example, by 1. The actuator count is compared to the response number at **1014**. When the actuator count is equal to the response number, the process ends. Otherwise, the process returns to **1010**.

The actuator **120** is thereby actuated a discrete integer number of times based on the response number. In this example, the actuator **120** is actuated until an actuator count, which is related to the discrete integer number, is equal to the response number or until the input is no longer detected. Thus, for example, the actuator **120** is actuated the discrete integer number of times unless the touch contact with the sensors **114** is discontinued before the actuator count equals the response number.

When the portable electronic device **100** is worn on or near the wrist of the user, actuation of the actuator **120** provides tactile output in the form of, for example, a pulsation or beat, as the membrane **410** is deflected when the actuator **120** strikes the membrane **410**.

Continued reference is made to FIG. **10** to describe one example of the method. According to the present example, a touch on the sensors **114** is detected at **1002** when the user places a hand over the outer surface of the portable electronic device **100**, in contact with the sensors **114**. The touch on multiple sensors **114** is matched to a query **1004** for the number of new electronic messages received. The number of new electronic messages is obtained at **1006**. For the purpose of this example, the number is 14. The response number is therefore greater than zero at **1008** and the process continues at **1010**. Touch contact with the sensors **114** is maintained and the touch is still detected at **1010**. The actuator **120** is actuated at **1012** and the actuator count, which in this example is the count of the number of times that the actuator **120** is actuated in response to the detected input, is incremented by 1. The process continues until the actuator **120** is actuated 14 discrete times.

According to another example, a touch on the sensors **114** is detected at **1002** when the user places a hand over the outer surface of the portable electronic device **100**, in contact with the sensors **114**. The touch on multiple sensors **114** is matched to a query **1004** for the number of new electronic messages received. The number of new electronic messages is obtained at **1006**. For the purpose of this example, the number is 14. The response number is therefore greater than zero at **1008** and the process continues at **1010**. Touch contact with the sensors **114** is maintained and the touch is still detected at **1010**. The actuator **120** is actuated, for example, by providing a single large pulse and the actuator count is incremented by 10. The actuator count is not equal to the response number and the process continues at **1010**. Touch contact with the sensors **114** is maintained and the touch is still detected at **1010**. The actuator **120** is actuated, for example, by providing a single smaller pulse of less magnitude or duration at **1012** and the actuator count is incremented by 1. The process continues until the actuator count is 14. Thus, a different tactile output may be utilized to communicate different information, for example, 10 or some other number. The tactile output may be provided in an order to convey information in increasing order of granularity such that valuable information may still be provided if the user discontinues the input before all output is provided.

According to another example, a touch on the sensors **114** is detected at **1002** when the user places a hand over the outer surface of the portable electronic device **100** and in contact with the sensors **114**. The touch on multiple sensors **114** is matched to a query **1004** for the number of new electronic messages received. The number of new electronic messages is obtained at **1006**. For the purpose of this example, the number is 14. The response number is therefore greater than zero at **1008** and the process continues at **1010**. Touch contact with the sensors **114** is maintained and the touch is still detected at **1010**. The actuator **120** is actuated at **1012** and the actuator count is incremented by 1. The process continues and the actuator is repeatedly actuated. Touch contact with the sensors **114** is discontinued after the actuator **120** is actuated 7 times, for example. Actuation of the actuator **120** is discontinued. Thus, when the number of electronic messages

received is very high, a user may determine that several messages are received, but may wish to discontinue the tactile output to avoid distraction.

User control of the tactile output is provided by discontinuing the output when the input is no longer detected. The longer the input is maintained, more information may be obtained. For example, when many unread email messages are received, input that is maintained for 1 second may be sufficient to provide output for the user to determine whether or not there are any unread messages. When input is maintained for 1 to 3 seconds, output may be provided for the user to determine that there are multiple unread email messages. When input is maintained for sufficient period of time to receive all output, the user may determine the approximate number of unread email messages and the exact number may be determined by an exact count. Thus, the length of time that the input is maintained may determine the amount of information conveyed by the output.

According to another example, a touch on two sensors **114** at opposing sides of the display **112** is detected at **1002** when the touches are detected, the two touches on the face **204** at opposing sides of the display **112** are matched to a query for a number of missed phone calls on the portable electronic device. The number of missed phone calls is obtained at **1006**. For the purpose of this example, the number is 2. The response number is therefore greater than zero at **1008** and the process continues at **1010**. Touch contact with the sensors **114** is maintained and the touch is still detected at **1010**. The actuator **120** is actuated at **1012** and the actuator count is incremented by 1. The process continues and the actuator is actuated a second time.

In the above-described examples, the portable electronic device **100** is a PDA and includes features and functions of a handheld electronic communication device. In another example embodiment, the portable electronic device may function without a display. For example, the device may not have any display or, alternatively, may include an analog watch face and components of an analog watch. In alternative examples, the portable electronic device may include more or fewer functions and features.

Alternatively, the portable electronic device may include short-range communication capabilities for communicating with a handheld electronic communication device or second electronic device but other communication capabilities may be absent from the device. Reference is made to FIG. **11** to describe an example of a portable electronic device that communicates, for example, with a handheld electronic communication device. Similar reference numerals are used herein to describe similar features of the portable electronic device. In this example, the portable electronic device **100** may include many of the features of the portable electronic device **100** shown in FIG. **1**. In the present example, however, the portable electronic device includes short-range communications **132**, for example, for communicating with the handheld electronic communication device **1100** but does not include a communication subsystem, for example. Features such as the microphone, speaker, data port, and other features may also be absent from the portable electronic device **100**. Instead, the portable electronic device **100** communicates wirelessly, such as through Bluetooth™ communication with a second electronic device such as the handheld electronic communication device **1100**. Thus, the portable electronic device in the present example may act as a peripheral device that communicates with the handheld electronic communication device **1100** and provides tactile output based on information stored at the handheld electronic communication device **1100**.

The portable electronic device **100**, which may be in the form of, for example, a watch, includes multiple components such as a processor **102** that controls the operations of the portable electronic device **100**. Data communications are performed through the short-range communications **132**. The portable electronic device **100** is a battery-powered device and includes a power source **142** such as a rechargeable battery or batteries.

The processor **102** also interacts with additional subsystems such as a Random Access Memory (RAM) **108**, memory **110**, buttons **112**, an accelerometer **113**, sensors **114**, an optional display **116**, an actuator **120**, an auxiliary input/output (I/O) subsystem **124**, and other device subsystems **134**. User interaction with the graphical user interface of the portable electronic device **100** may be performed through the buttons **112** and the sensors **114**. The processor **102** may interact with the actuator **120** through the controller **122**. The processor **102** may also interact with the sensors **114** via an electronic controller.

As indicated, the portable electronic device **100** may communicate with the handheld electronic communication device **1100** which includes many of the features of the portable electronic device **100**. In the present example, the handheld electronic communication device **1100** may perform communication functions, including data and voice communications which are performed through a communication subsystem **1104**. Data received by the portable electronic device **1100** may be decompressed and decrypted by a decoder **1106**. The communication subsystem **1104** receives messages from and sends messages to a wireless network **150**. The wireless network **150** may be any type of wireless network, including, but not limited to, data-centric wireless networks, voice-centric wireless networks, and dual-mode networks that support both voice and data communications over the same physical base stations. The portable electronic device **100** is a battery-powered device and includes a power source **1142** such as a rechargeable battery or batteries.

The processor **1102** of the handheld communication device **1100** also interacts with additional subsystems such as a Random Access Memory (RAM) **1108**, memory **1110**, a keyboard **1118**, a display **1116**, an auxiliary input/output (I/O) subsystem **1124**, a data port **1126**, a speaker **1128**, a microphone **1130**, short-range communications **1132** and other device subsystems **1134**. The short-range communications **1132** are utilized to communicate with the portable electronic device **100**, which in the present example is a peripheral device.

Information such as a text message, an e-mail message, or web page download is processed by the communication subsystem **1104** and input to the processor **1102**. The processor **1102** then processes the received signal for output to the display **1112**. Information may also be sent from the handheld electronic communication device **1100** to the portable electronic device **100** and data, in the form of, for example, a query or queries may be received at the handheld electronic communication device **1100** from the portable electronic device **100**.

Communication between the handheld electronic communication device **1100** and the portable electronic device **100** may be initiated in any suitable manner. For example, communication may be initiated by selection of an option to search for peripheral devices utilizing the handheld electronic communication device **1100** when the portable electronic device **100** is within suitable range for operation of the short-range communications. Communication may also be initiated by selection of an option to listen for peripheral devices, for

example. Alternatively, or in addition, communication may be initiated via the portable electronic device **100**.

FIG. **12** through FIG. **14** show example screen shots of the display **1112** of the handheld electronic communication device **1100** to configure the portable electronic device **100** utilizing the handheld electronic communication device **1100**. There are many methods of configuring the portable electronic device **100** and FIG. **12** through FIG. **14** illustrate one example only.

In the screen shot illustrated in FIG. **12**, queries may be associated with input at the portable electronic device **100** may be set utilizing, for example, the display **116**, which may be a touch-sensitive display, or utilizing an auxiliary I/O **124** such as an optical joystick, trackball, trackwheel, or other suitable device **124**. The options may be accessed, for example, by selection of a query to input association option in a menu or submenu on the handheld electronic communication device **1100**. Inputs that are received at the portable electronic device **100** are matched with respective queries in the table **1202** illustrated. In the example illustrated, five inputs are associated with five respective queries such that each defined input is associated with a respective query. The five inputs include, for example, "cover watch face" **1204**, which may be detected utilizing the sensors **114** on the portable electronic device **100**, "nudge" **1206**, which may be detected utilizing the accelerometer **113**, "top left button" **1208**, which may be detected utilizing one of the buttons **112**, "top right button" **1210**, which may be detected utilizing another of the buttons **112**, and "bottom left button" **1212**, which may be detected utilizing yet another of the buttons **112**. The associated queries include a number of unread emails **1214**, a total number of new notifications **1216**, a number of minutes until the next calendar event **1218**, a presence of a new instant message **1220**, and a number of power bars **1222** representing battery life. Other queries may also be utilized such as a number of calendar events in a time period, a number of new messages from a social networking website, or any other suitable query.

Both the inputs and the queries that are associated with the inputs are selectable and may be set utilizing the handheld electronic communication device, for example. An add query option **1224** and a delete query option **1226** are also provided to facilitate addition and deletion of associations of queries with input.

The tactile output that is provided by the portable electronic device **100** in response to the input, may also be selectable. The tactile output includes a setting to associate a magnitude of the output, e.g., a force of the actuator, which, when a piezo actuator is utilized, may be controlled by controlling the voltage across the piezo actuator, to an integer number. In the present example, a weak output and a strong output may each be associated with a selectable integer, as illustrated by the pull-down menus **1228**, **1230**, respectively.

To add an input associated with a query, a user may select the add query option **1224** using a suitable selection method. In response to selection of the add query option **1224**, an input may be selected for the new query as illustrated by the drop-down menu **1302** shown in FIG. **13** The associated query may also be selected as illustrated by the drop-down menu **1304**. Upon selection of the drop-down menu **1302**, a menu list of selectable inputs **1402** is displayed as illustrated in FIG. **14**. Any one of the selectable inputs in the menu list **1402** may be selected in any suitable manner. Inputs that are already associated with queries may be removed from the drop-down menu or may not be selectable so that a conflict in which more than one query is associated with a single input, does not occur. Upon selection of the drop-down menu **1304** shown in FIG. **13**, a menu list of selectable queries **1404** is displayed as illustrated in FIG. **14**. Any one of the selectable queries in the menu list of selectable queries **1404** may be selected in any suitable manner.

The associated tactile output may also be selected for the query. As illustrated, a menu list of selectable integer numbers **1306** may be displayed upon selection of the pull-down menu **1228** (shown in FIG. **12**) associated with the weak output. A similar menu list may be displayed upon selection of the pull-down menu **1230** associated with the strong output. The tactile output may also be pre-set or default values may be associated. The pre-set or default tactile output may also be dependent on the query.

When the input, query and the tactile output are each selected in the present example, the input and associated query is added by selection of, for example, the "add" key **1308**. Alternatively, the user may discontinue and exit without adding the input and associated query by selection of, for example, a "cancel" key **1310**.

When an input is received at the portable electronic device **100**, the input may be associated with the query at the portable electronic device **100** based on the associations set at the handheld electronic communication device **1100**. Alternatively, input signals may be sent from the portable electronic device **100** to the handheld electronic communication device **1100** where the signals are associated with the query.

To delete an input associated with a query, a user may select the query, for example by highlighting the query in any suitable manner, followed by selection of the delete query option **1226**.

Reference is made to FIG. **15** to describe a method of controlling the portable electronic device **100** utilizing the handheld electronic communication device **1100**. Communications are established at **1502**. When changes are made to the associations between the queries and input at **1504**, the changes are sent to the portable electronic device at **1506**. The changes may be detected in any suitable manner.

Reference is again made to FIG. **10** as well as FIG. **11** to describe an example of a method of controlling the portable electronic device **100**. According to the present example, a touch on the sensors **114** is detected at **1002** when the user places a hand over the outer surface of the portable electronic device **100**, in contact with the sensors **114**. The touch on multiple sensors **114** is matched to a query **1004** for the number of unread email messages and the associated query is determined. The number of unread email messages, or messages marked unopened, is obtained at **1006** by sending the query to the handheld electronic communication device **1100** and the handheld electronic communication device **1100** responds with the number of unread email messages. For the purpose of this example, the number is 14. The response number is therefore greater than zero at **1008** and the process continues at **1010**. Touch contact with the sensors is maintained and the touch is still detected at **1010**. The actuator **120** is actuated utilizing the strong magnitude to provide a relatively strong output compared to the weak output at **1012** and the actuator count is incremented by 5. The process continues by actuating the actuator **120** a discrete number of times until the actuator count is equal to 14.

In an alternative example, a peripheral device may also be utilized to receive an input, such as a touch or gesture on the peripheral device and to send data to a second electronic device. The second electronic device provides the response. Thus, the second electronic device receives input in the form of data from the peripheral device and carries out the method of FIG. **10**.

The electronic device is described as a wristwatch for the purpose of providing an example. The electronic device **100** is not limited to a watch. For example, the electronic device may be a wristband, a necklace, a device worn around the upper arm, or a handheld device including a handheld device that may be hidden in a closed hand. The electronic device may also be a device that is hidden under clothing or placed in a pocket and the input is not limited to input utilizing touch sensors. Instead, the input may be received via force sensors or a button on the device.

According to another example, the actuator may be a vibrator device such as a vibrator motor to cause vibration of the portable electronic device. In this example, the vibrator motor is controlled to provide a number of discrete vibrations. Thus, rather than a piezo actuator, the vibrator motor is turned on for short, discrete periods of time to provide the tactile output.

Other actuators may also be utilized. For example, a voice-coil transducer may be utilized, an electrostimulation transducer, solenoid, or any other suitable actuator may be utilized to actuate and thereby provide tactile output a discrete number of times.

Advantageously, tactile output is provided from a portable electronic device in contact with the skin of a user to provide information to the user without requiring viewing of a display. Such information may be useful, for example, when a user is in a meeting, driving a vehicle, or in any other instance in which viewing of a display is difficult, dangerous, or disruptive. Control of tactile output in touch-sensitive devices is provided as the tactile output may be discontinued by the user.

According to one aspect, a method of controlling an electronic device includes detecting receipt of an input, determining a response number in response to receipt of the input, and actuating an actuator of the electronic device a discrete integer number of times based on the response number.

According to another aspect, an electronic device is provided. The electronic device includes a housing, an actuator disposed in the housing, and a processor configured to control actuation of the actuator to cause the electronic device to detect receipt of an input, determine a response number in response to receipt of the input, and actuate an actuator of the electronic device a discrete integer number of times based on the response number.

According to another aspect, a portable electronic device includes short range communications for communicating with a second electronic device, a first input device to receive a first input, an actuator to provide tactile output, and a processor connected to the short range communications, the first input device, and the actuator, to send a first query to the second electronic device in response to receipt of the first input and actuate the actuator to output a response.

According to another aspect, a method of controlling a portable electronic device utilizing a second electronic device includes establishing communications with the portable electronic device, and associating a first input at the portable electronic device with a first query for information stored on the second electronic device such that the information is received for providing tactile output at the portable electronic device in response to receipt of the first input at the portable electronic device.

While the embodiments described herein are directed to particular implementations of the actuating assembly and the portable electronic device and the, it will be understood that modifications and variations may occur to those skilled in the art. All such modifications and variations are believed to be within the sphere and scope of the present disclosure.

What is claimed is:

1. A method of controlling an electronic device, comprising:

detecting receipt of an input;

determining a response number in response to receipt of the input by communicating with a second electronic device and receiving the response number from the second electronic device; and

actuating an actuator at the electronic device a discrete integer number of times based on the response number.

2. The method according to claim **1**, comprising determining an associated query based on the input received.

3. The method according to claim **2**, wherein determining the response number comprises sending the query to the second electronic device.

4. The method according to claim **1**, wherein communicating comprises communicating wirelessly with the second electronic device.

5. The method according to claim **1**, wherein actuating comprises repeatedly actuating the actuator until the discrete integer number equals the response number or until the input is discontinued.

6. The method according to claim **1**, wherein the discrete integer number equals the response number.

7. The method according to claim **1**, comprising determining that the input is maintained and, in response, actuating the actuator the discrete number of times.

8. The method according to claim **1**, wherein the response number comprises a number of electronic messages received.

9. The method according to claim **1**, wherein the response number comprises a number of new electronic messages.

10. The method according to claim **1**, wherein actuating the actuator comprises controlling the actuator to strike a surface the discrete number of times to provide the tactile output.

11. The method according to claim **1**, wherein actuating the actuator comprises charging and discharging a piezoelectric actuator to strike a surface to provide the tactile output.

12. The method according to claim **1**, wherein actuating the actuator comprises controlling a vibrator motor to provide tactile output the discrete number of times.

13. A non-transitory computer-readable medium having computer-readable code executable by at least one processor of a portable electronic device to perform the method according to claim **1**.

14. An electronic device comprising:

a housing;

an actuator disposed in the housing; and

a processor coupled to the actuator to cause the electronic device to carry out the method according to claim **1**.

* * * * *