US005612931A

United States Patent [19]

Sato et al.

[11] Patent Number: 5,612,931

[45] Date of Patent: Mar. 18, 1997

[54] **SWITCH DEVICE AND ELECTRONIC INSTRUMENTS EQUIPPED WITH THE SWITCH DEVICE**

[75] Inventors: **Hiroshi Sato**; **Masayoshi Okuyama**; **Nobuhiro Aoki**, all of Tokyo, Japan

[73] Assignee: **Casio Computer Co., Ltd.**, Tokyo, Japan

[21] Appl. No.: **498,171**

[22] Filed: **Jul. 5, 1995**

[30] **Foreign Application Priority Data**

Jul. 7, 1994 [JP] Japan 6-180579
Dec. 8, 1994 [JP] Japan 6-304882

[51] **Int. Cl.**[6] **G04B 19/30**

[52] **U.S. Cl.** **368/67**; 368/227

[58] **Field of Search** 368/67, 227

[56] **References Cited**

U.S. PATENT DOCUMENTS

3,963,885 6/1976 Brien 368/227
4,003,197 1/1977 Haber 368/67
4,095,408 6/1978 Kashio .
4,135,067 1/1979 Bitko .
4,775,964 10/1988 Alessio et al. .
4,912,688 3/1990 Syfert .

FOREIGN PATENT DOCUMENTS

1540562 7/1977 England .
2449071 4/1976 Germany .
2828566 1/1979 Germany .

Primary Examiner—Bernard Roskoski
Attorney, Agent, or Firm—Frishauf, Holtz, Goodman, Langer & Chick

[57] **ABSTRACT**

When an electronic instrument has taken a predetermined attitude, an attitude-detecting switch incorporated in the instrument detects the attitude, and outputs a switch signal to a CPU. The CPU, in turn, drives a lighting device for lighting a liquid crystal display device. The lighting device is driven, for example, only when a predetermined number of pulses of the switch signal are generated within a predetermined period of time, or only when the switch signal has continued for a predetermined period of time or more. Thus, there are cases where the lighting device is not driven irrespective of the generation of the switch signal. As a result, the lighting device is prevented from operating so often, and hence the life of its battery is lengthened.

10 Claims, 15 Drawing Sheets

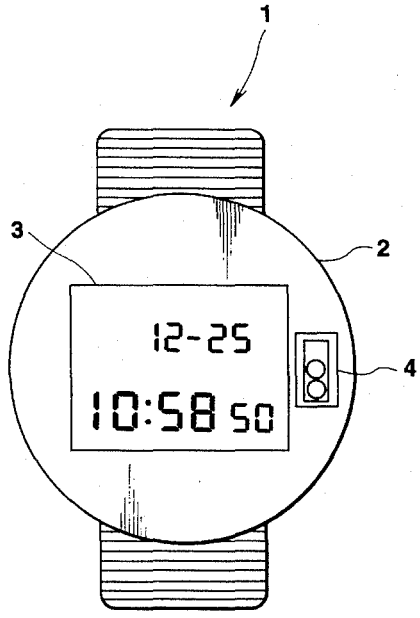

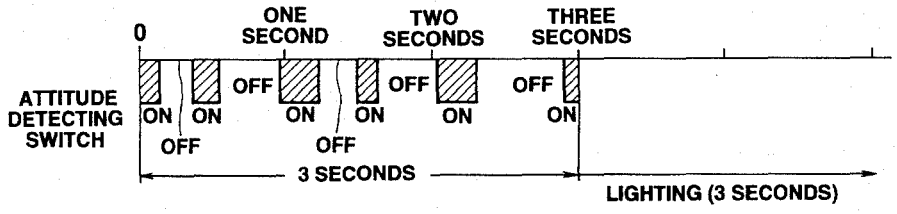

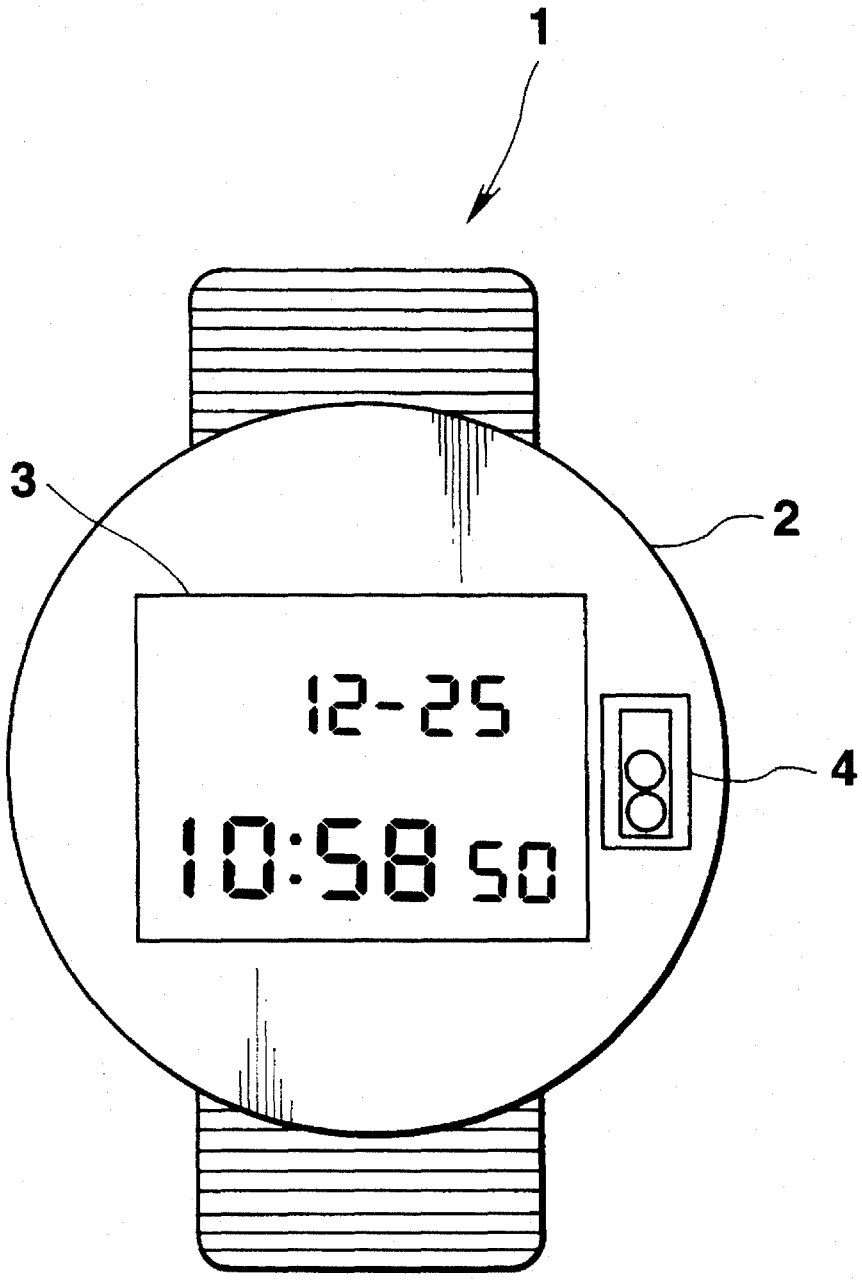

FIG.1

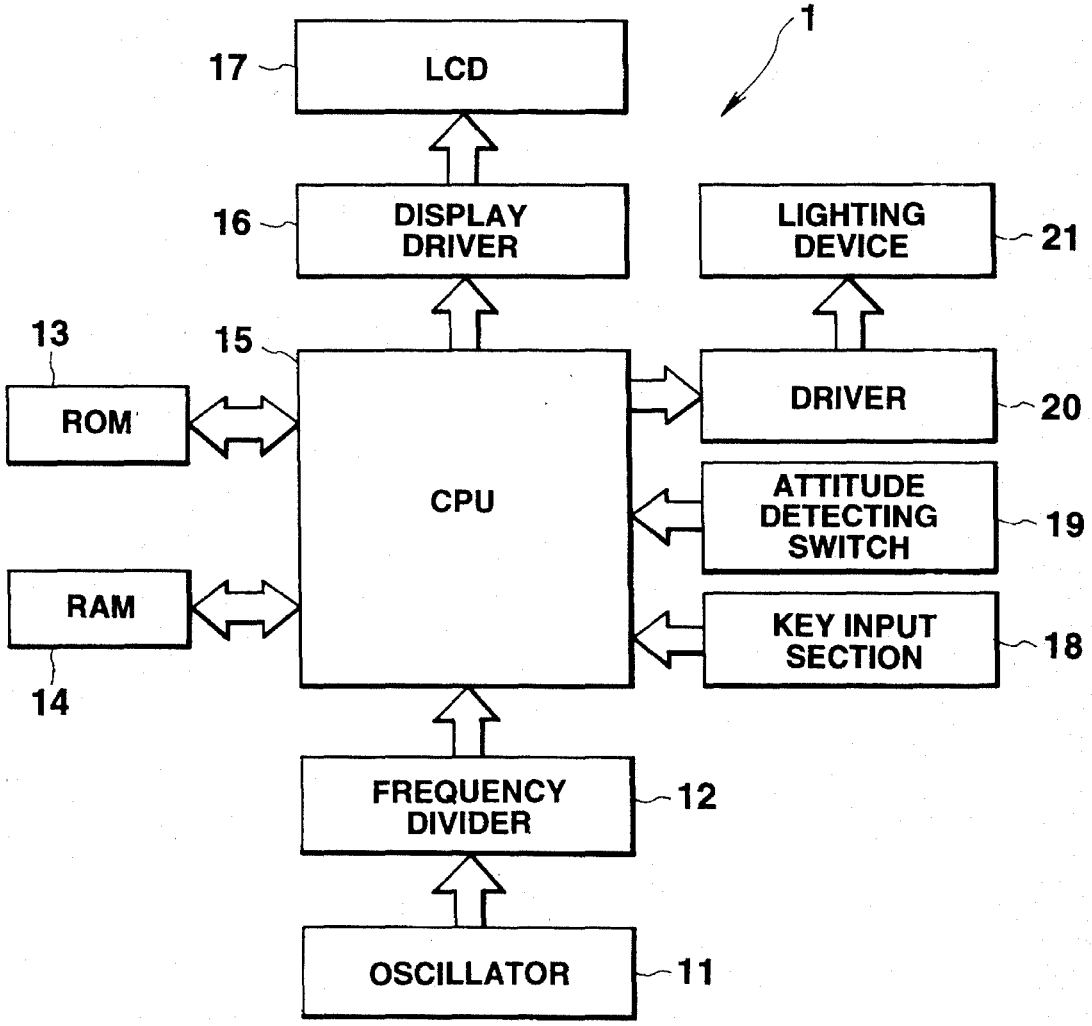
1
17
LCD
16
DISPLAY DRIVER
LIGHTING DEVICE
21
13
15
ROM
CPU
DRIVER
20
ATTITUDE DETECTING SWITCH
19
RAM
KEY INPUT SECTION
18
14
FREQUENCY DIVIDER
12
OSCILLATOR
11

FIG.2

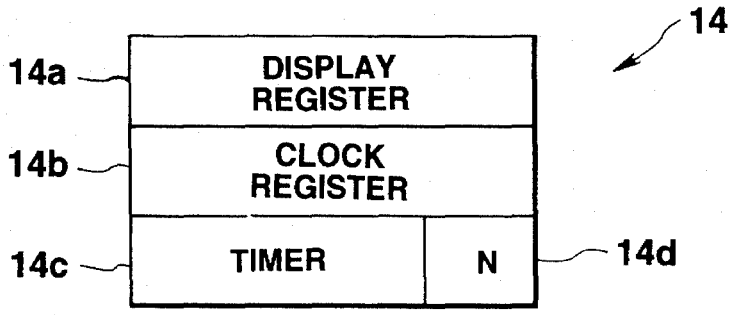
14
14a
DISPLAY REGISTER
14b
CLOCK REGISTER
14c
TIMER
N
14d

FIG.3

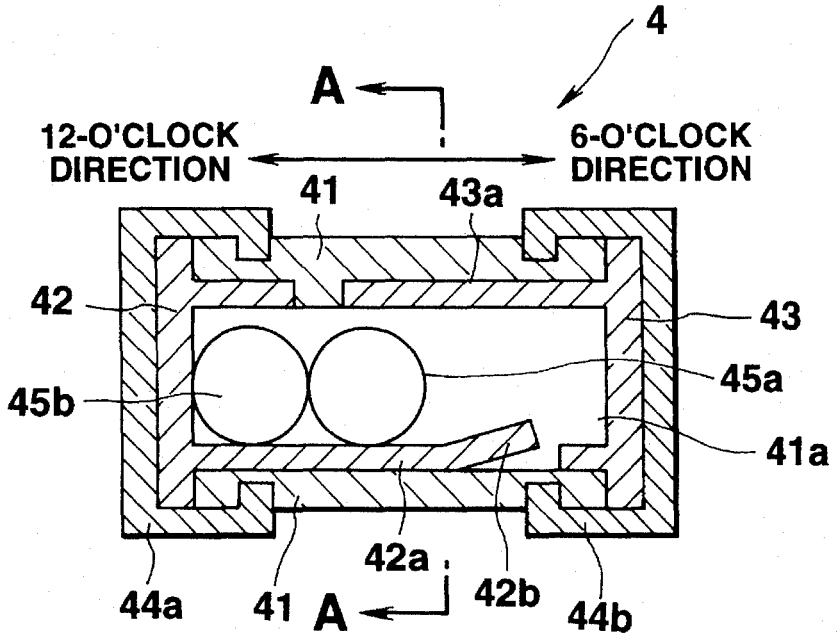
4
A
12-O'CLOCK DIRECTION
6-O'CLOCK DIRECTION
41
43a
42
43
45a
45b
41a
42a
44a
41
A
42b
44b

FIG.4

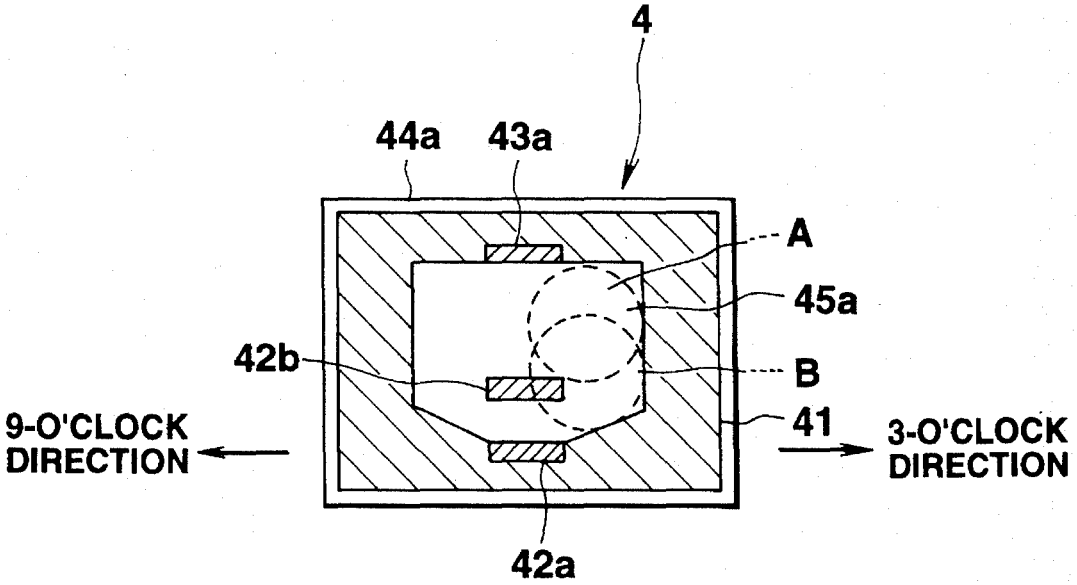
4
44a
43a
A
45a
42b
B
41
9-O'CLOCK DIRECTION
3-O'CLOCK DIRECTION
42a

FIG.5

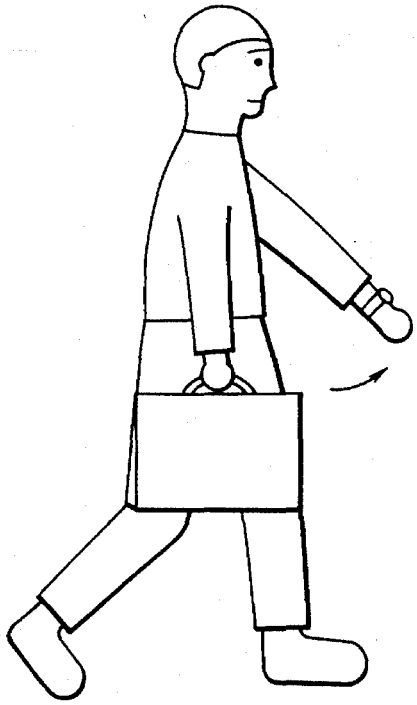

FIG.6

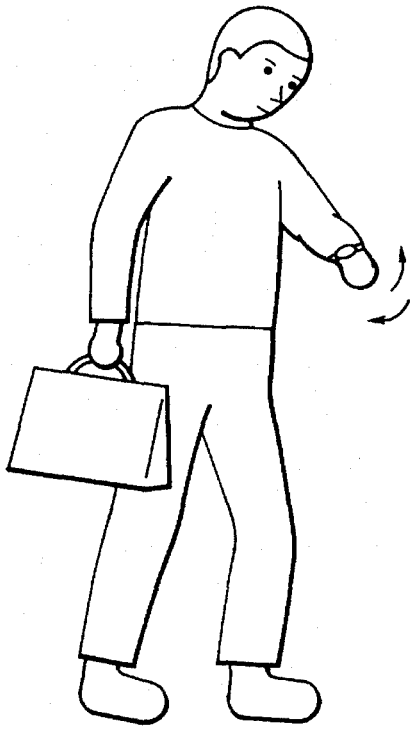

FIG.7

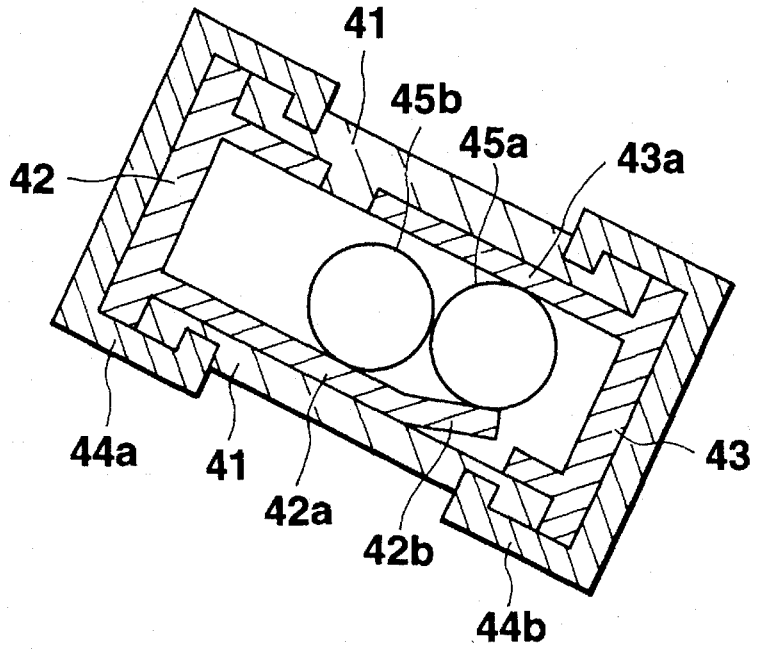
41
45b
45a
43a
42
44a
41
42a
42b
43
44b

FIG.8

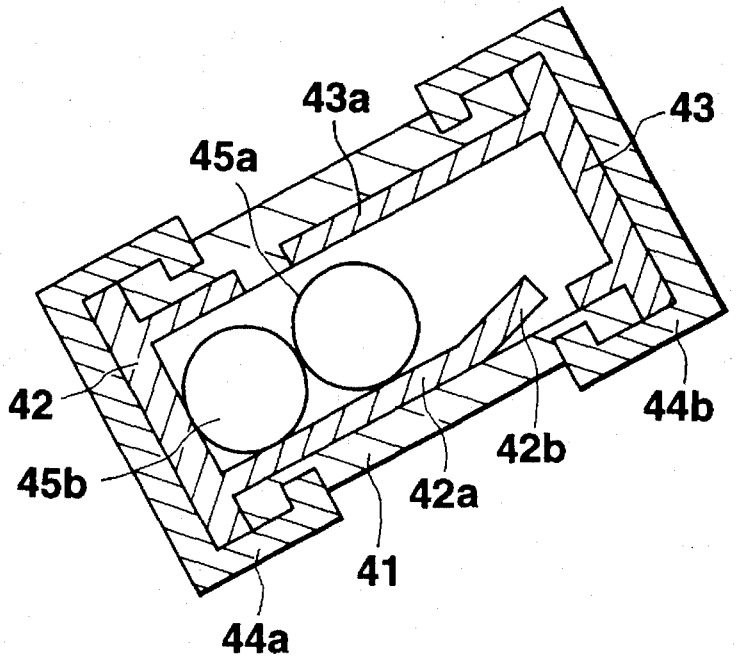
43a
43
45a
42
44b
42b
45b
42a
41
44a

FIG.9

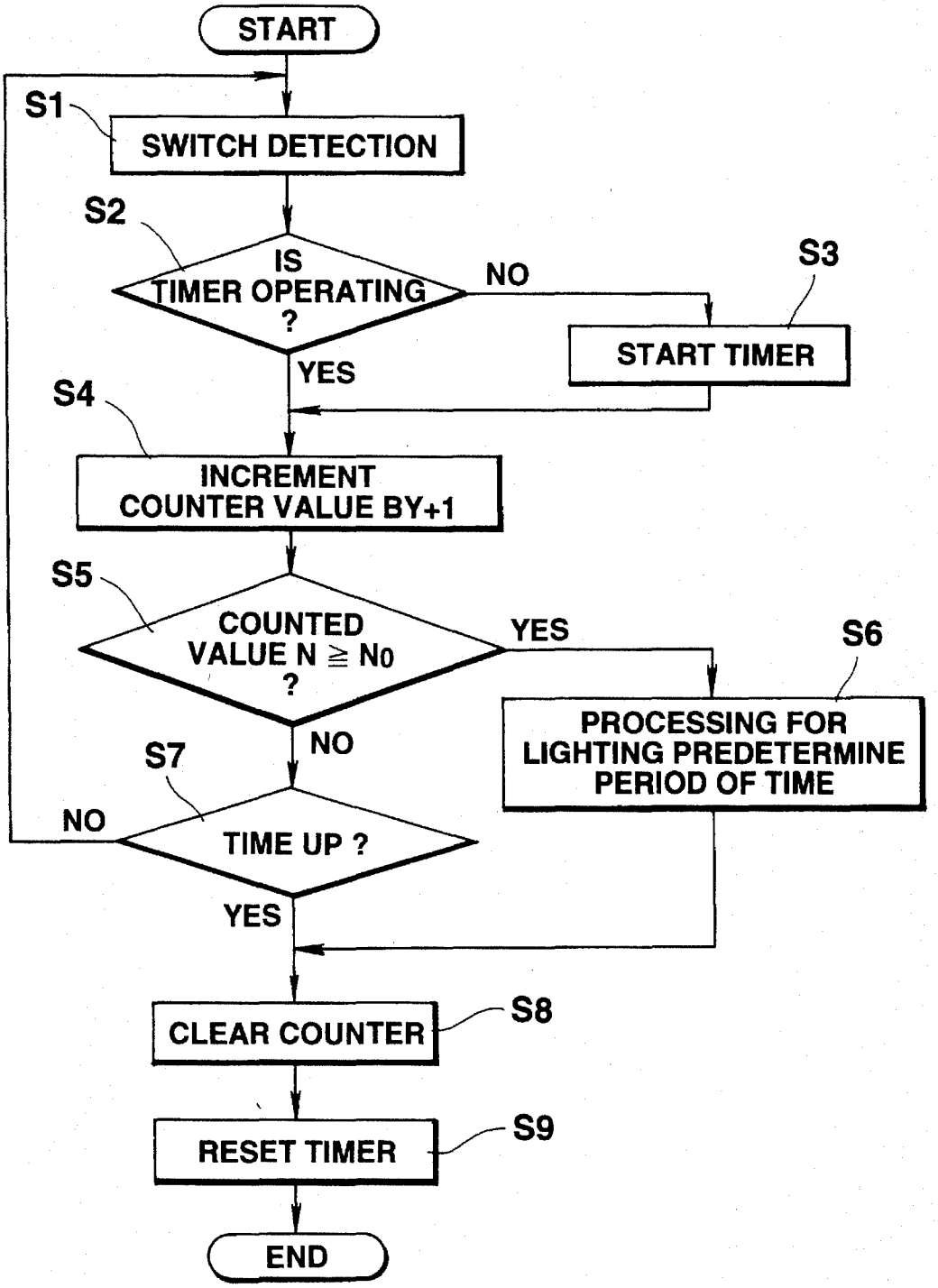
START
S1
SWITCH DETECTION
S2
IS TIMER OPERATING ?
NO
S3
START TIMER
YES
S4
INCREMENT COUNTER VALUE BY+1
S5
COUNTED VALUE N ≧ N0 ?
YES
S6
PROCESSING FOR LIGHTING PREDETERMINE PERIOD OF TIME
NO
S7
NO
TIME UP ?
YES
CLEAR COUNTER
S8
RESET TIMER
S9
END

FIG.10

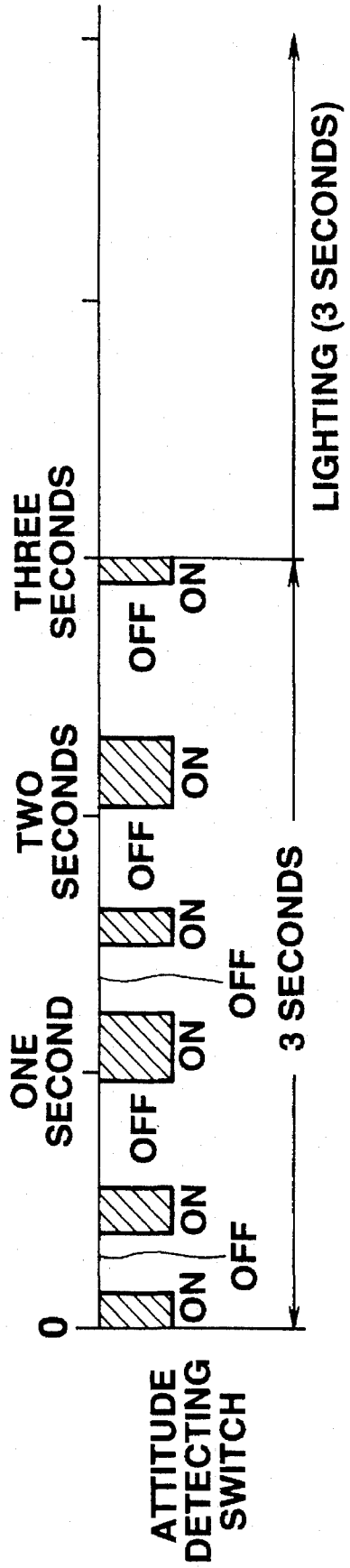
ATTITUDE DETECTING SWITCH
0
ONE SECOND
TWO SECONDS
THREE SECONDS
ON
OFF
ON
OFF
ON
OFF
ON
OFF
ON
OFF
3 SECONDS
LIGHTING (3 SECONDS)

FIG.11

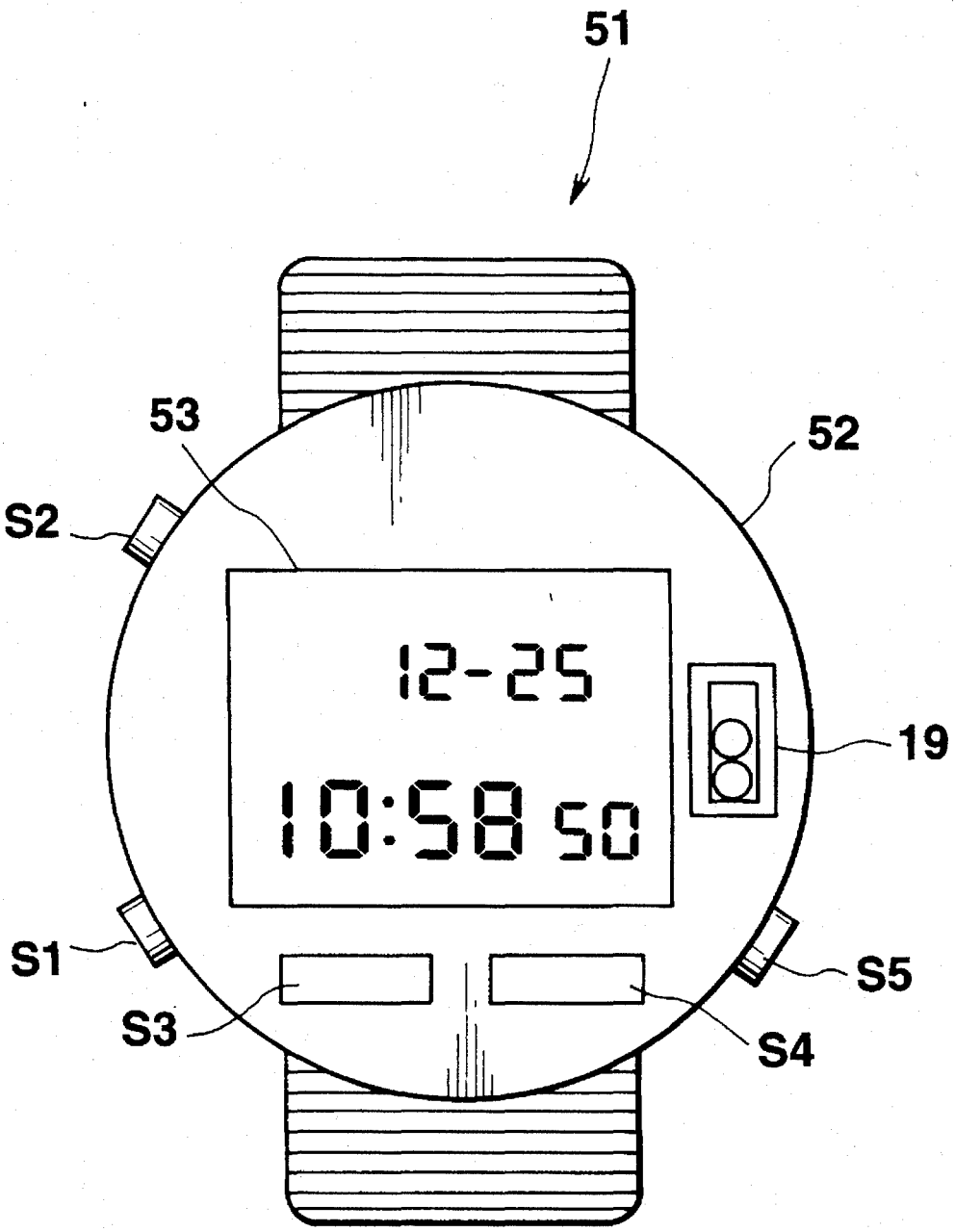

FIG.12

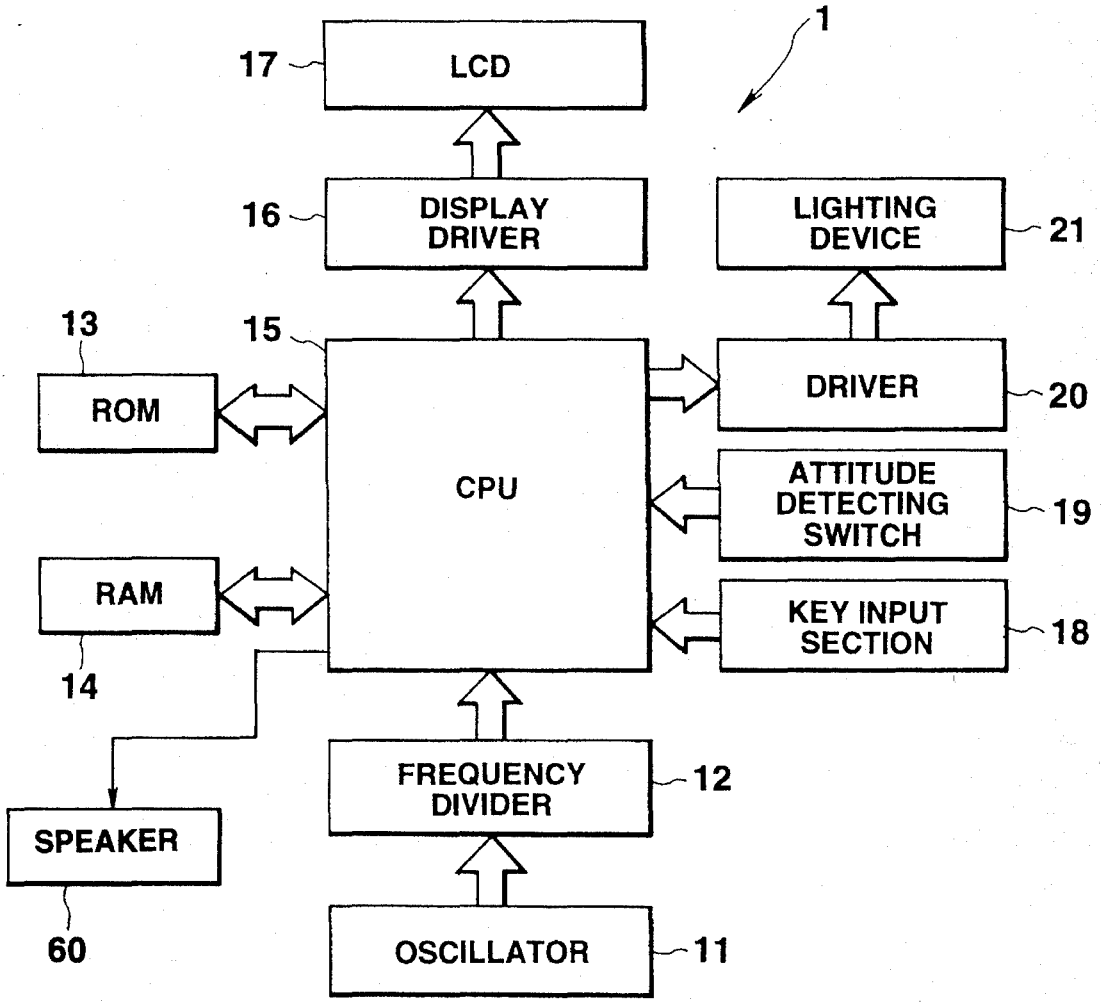
1
17
LCD
16
DISPLAY DRIVER
LIGHTING DEVICE
21
13
15
ROM
CPU
DRIVER
20
ATTITUDE DETECTING SWITCH
19
RAM
KEY INPUT SECTION
18
14
FREQUENCY DIVIDER
12
SPEAKER
60
OSCILLATOR
11

FIG.13

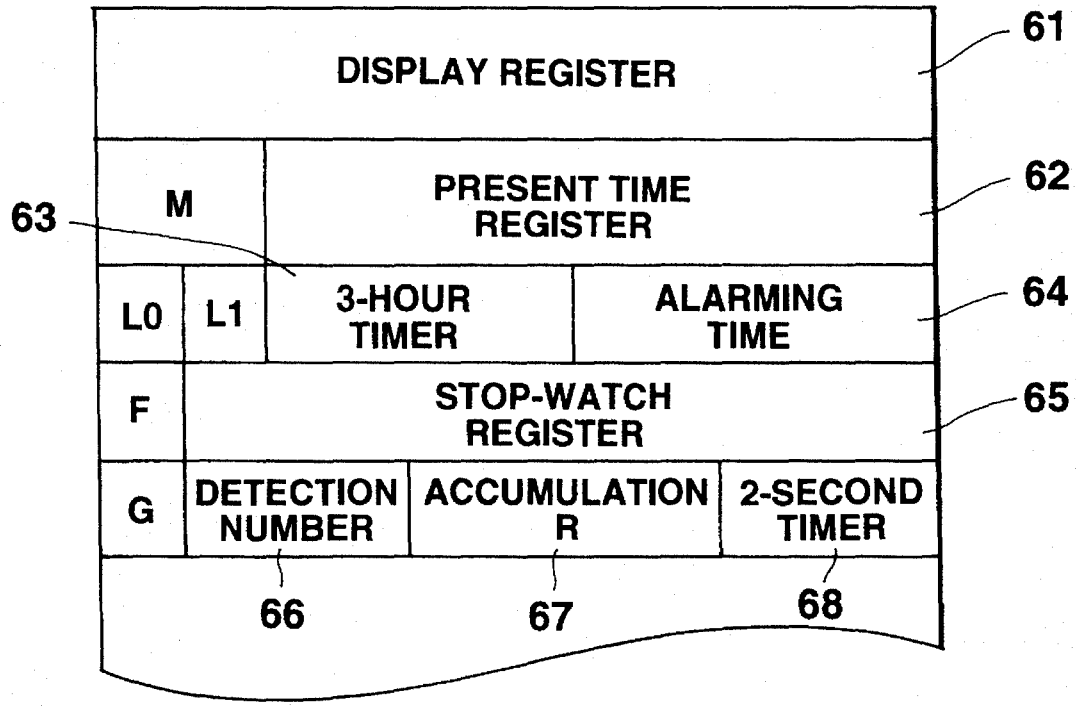
DISPLAY REGISTER
61
M
PRESENT TIME REGISTER
62
63
L0
L1
3-HOUR TIMER
ALARMING TIME
64
F
STOP-WATCH REGISTER
65
G
DETECTION NUMBER
ACCUMULATION R
2-SECOND TIMER
66
67
68

FIG.14

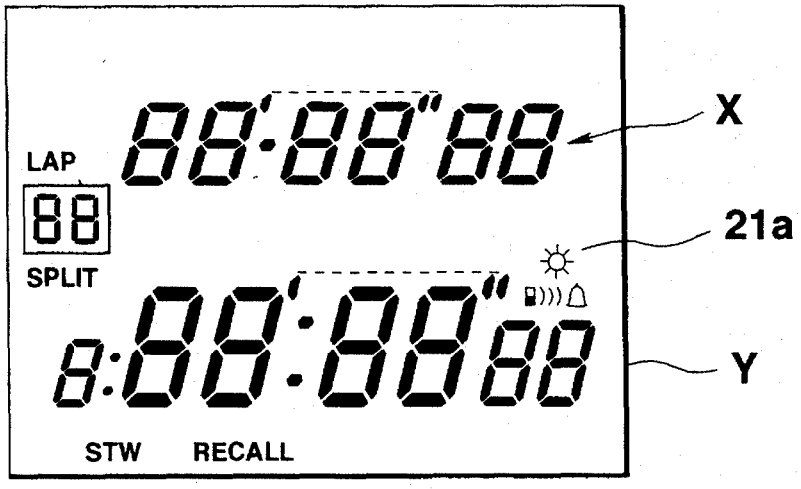
LAP
88
SPLIT
X
21a
Y
STW
RECALL

FIG.15

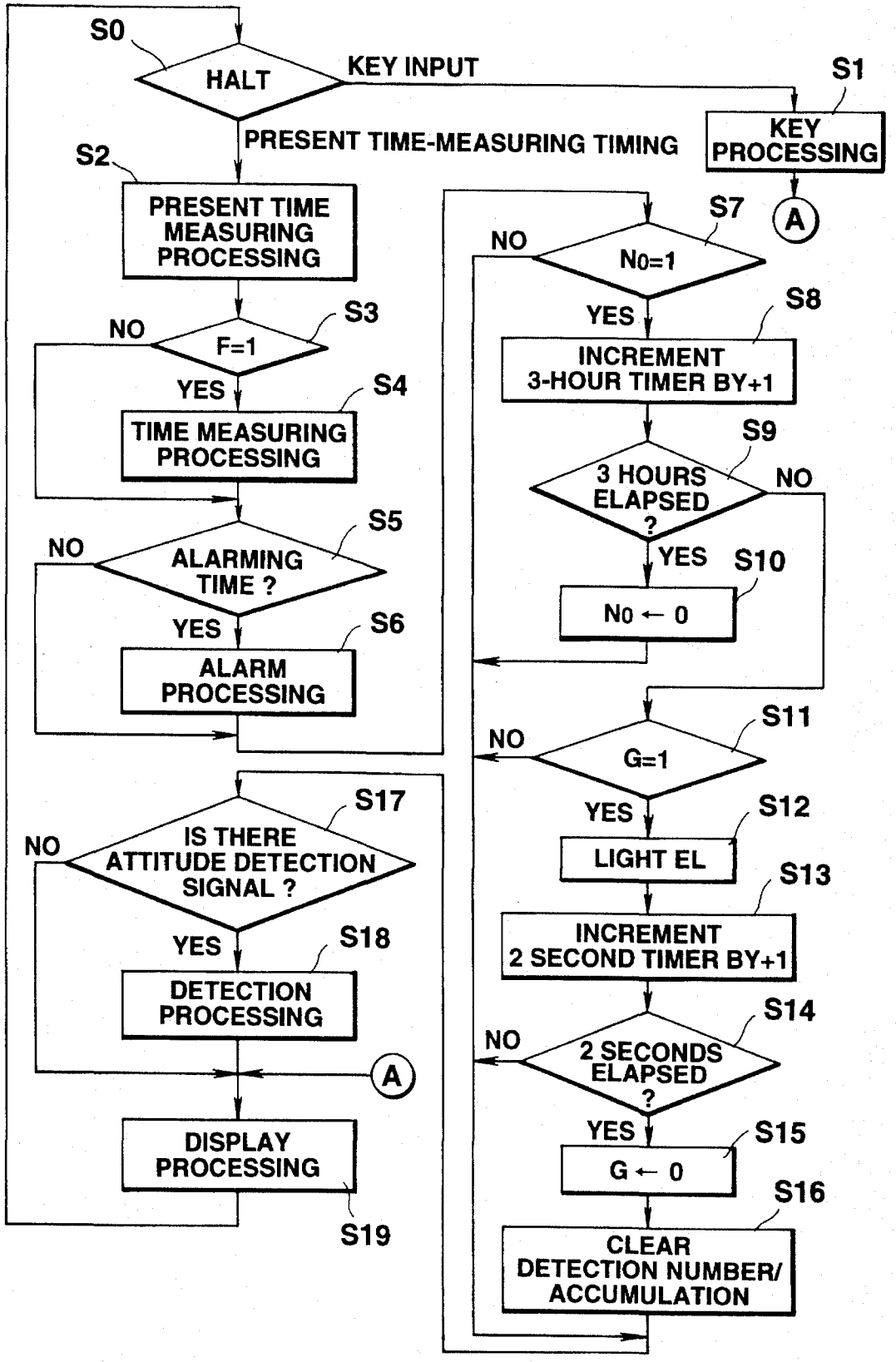
S0
HALT
KEY INPUT
S1
KEY PROCESSING
A
PRESENT TIME-MEASURING TIMING
S2
PRESENT TIME MEASURING PROCESSING
S3
F=1
NO
YES
S4
TIME MEASURING PROCESSING
S5
ALARMING TIME ?
NO
YES
S6
ALARM PROCESSING
S7
N0=1
NO
YES
S8
INCREMENT 3-HOUR TIMER BY+1
S9
3 HOURS ELAPSED ?
NO
YES
S10
N0 ← 0
S11
G=1
NO
YES
S12
LIGHT EL
S13
INCREMENT 2 SECOND TIMER BY+1
S14
2 SECONDS ELAPSED ?
NO
YES
S15
G ← 0
S16
CLEAR DETECTION NUMBER/ ACCUMULATION
S17
IS THERE ATTITUDE DETECTION SIGNAL ?
NO
YES
S18
DETECTION PROCESSING
A
DISPLAY PROCESSING
S19

FIG.16

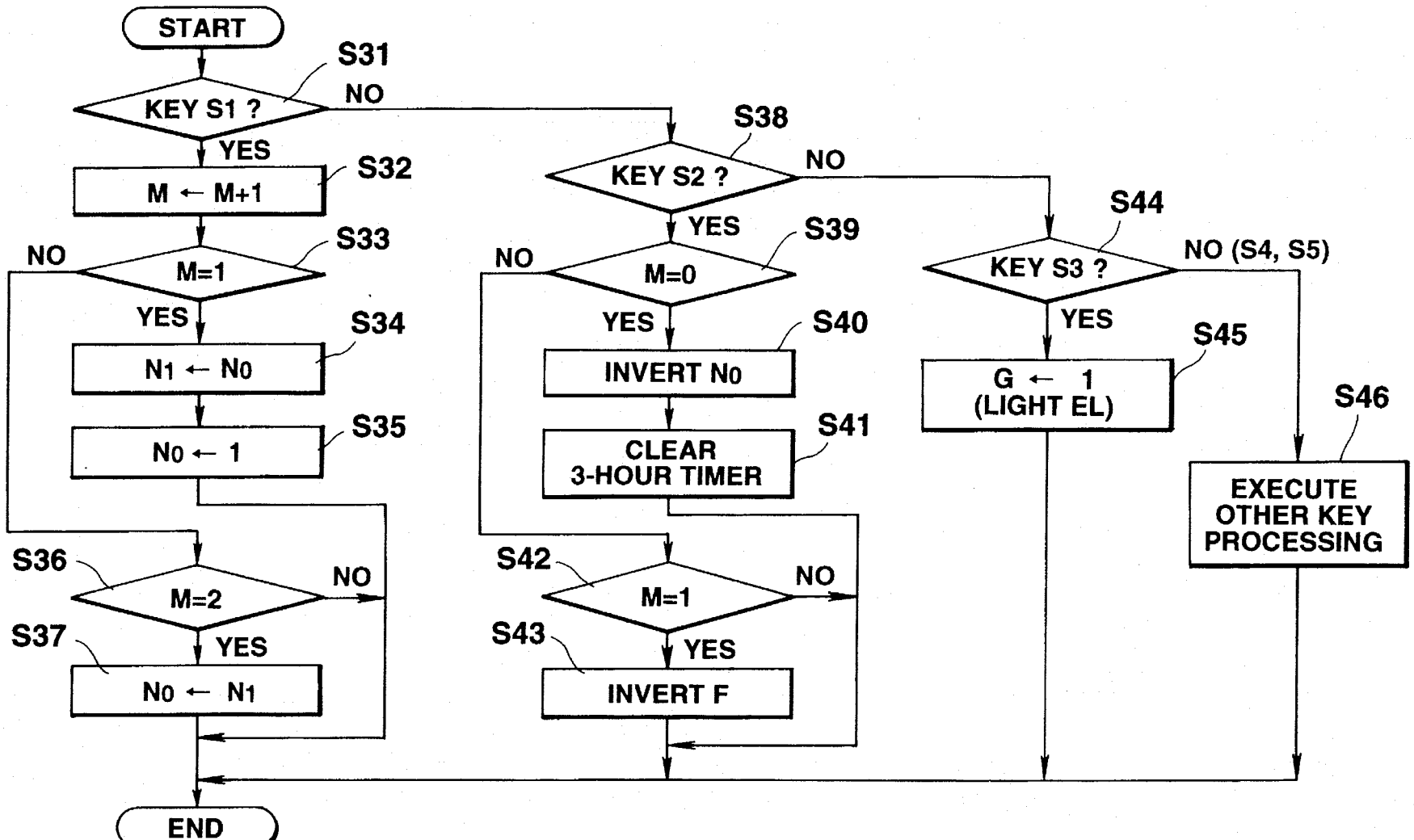
START
S31
KEY S1 ?
NO
YES
S32
M ← M+1
S33
NO
M=1
YES
S34
N1 ← N0
S35
N0 ← 1
S36
M=2
NO
S37
YES
N0 ← N1
END
S38
KEY S2 ?
NO
YES
S39
NO
M=0
YES
S40
INVERT N0
S41
CLEAR
3-HOUR TIMER
S42
M=1
NO
S43
YES
INVERT F
S44
KEY S3 ?
NO (S4, S5)
YES
S45
G ← 1
(LIGHT EL)
S46
EXECUTE
OTHER KEY
PROCESSING

FIG.17

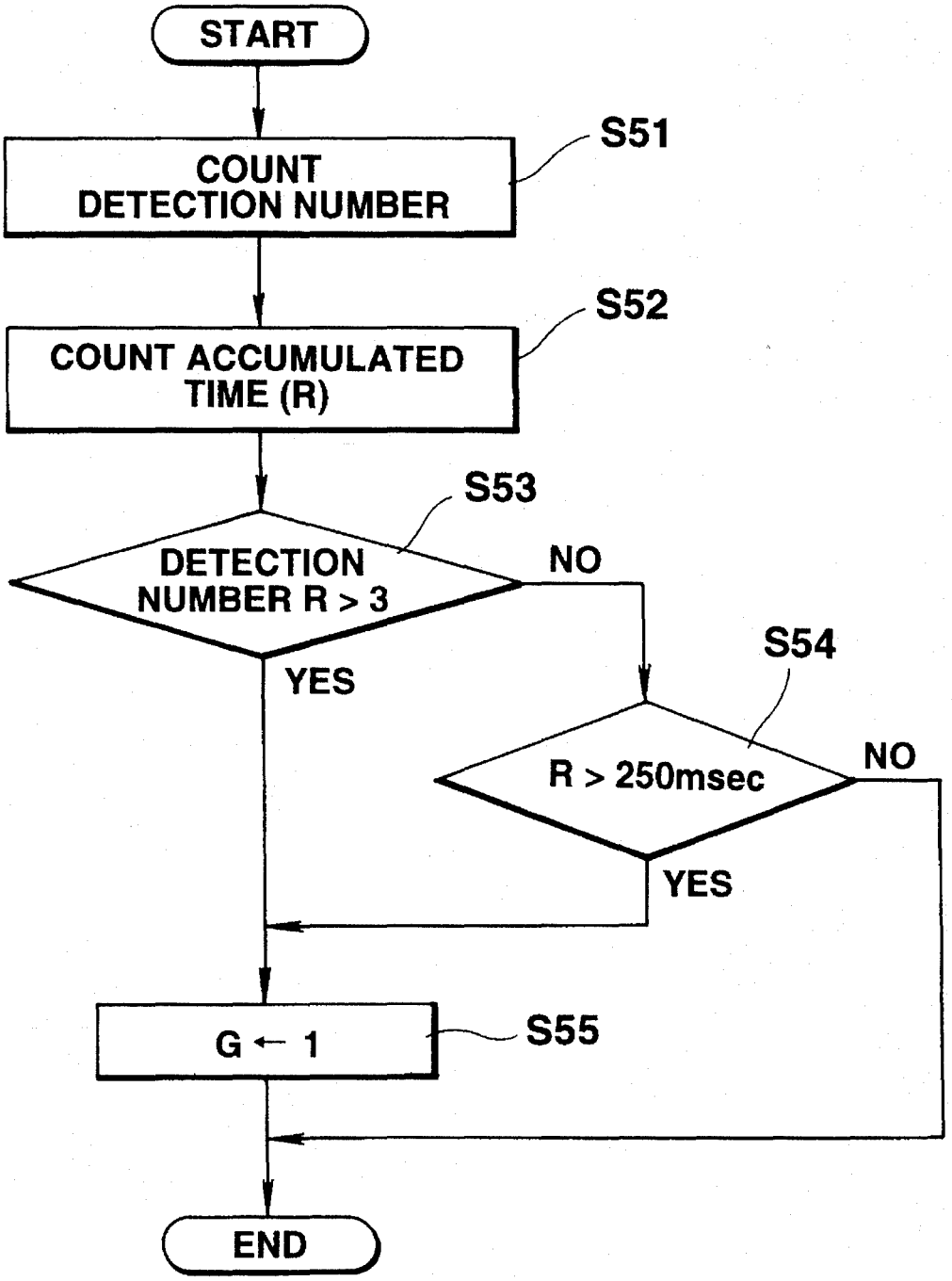
START
COUNT DETECTION NUMBER
S51
COUNT ACCUMULATED TIME (R)
S52
DETECTION NUMBER R > 3
S53
NO
YES
R > 250msec
S54
NO
YES
G ← 1
S55
END

FIG.18

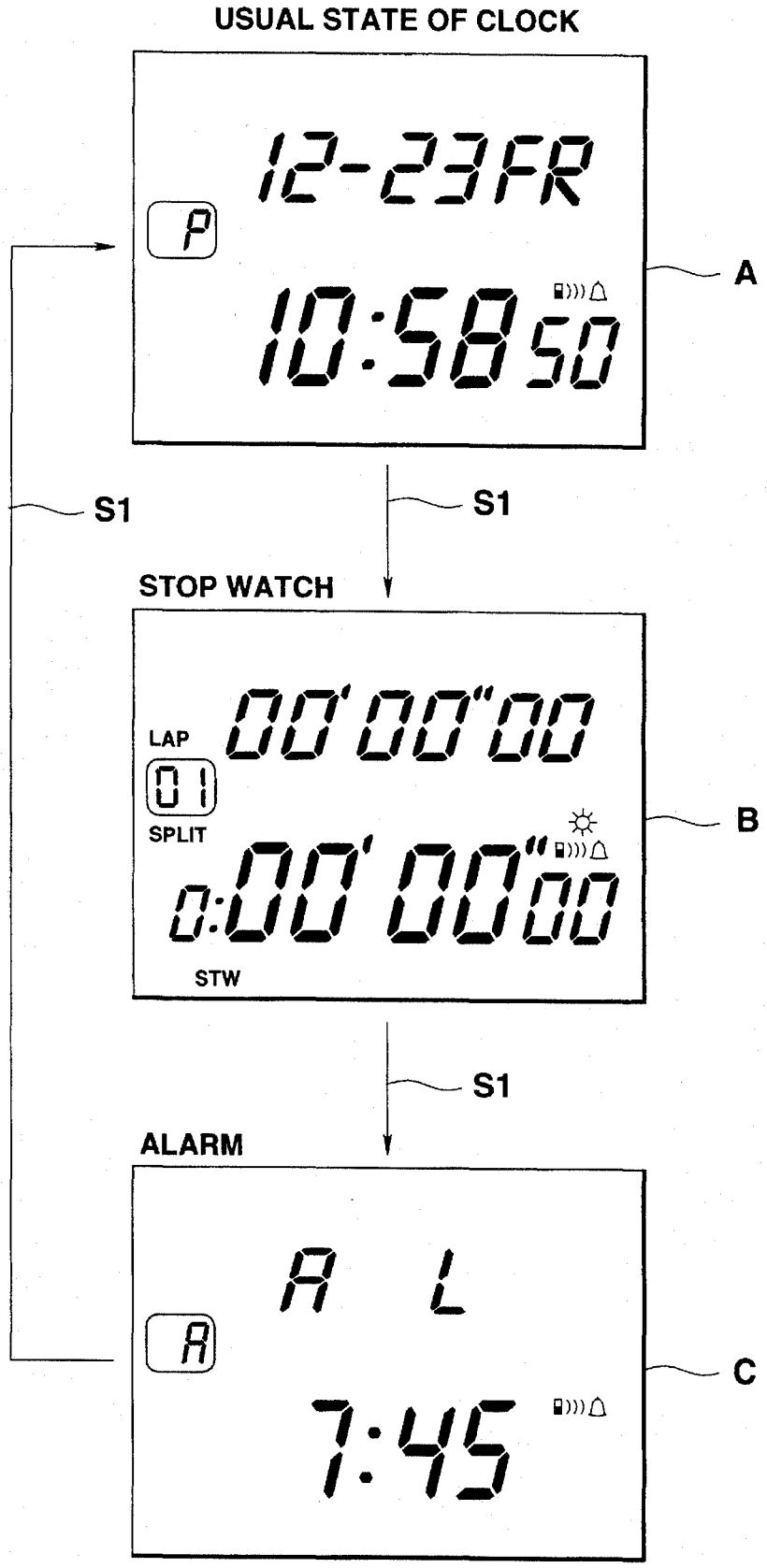
USUAL STATE OF CLOCK
12-23FR
P
10:58 50
A
S1
S1
STOP WATCH
00'00"00
LAP
01
SPLIT
0:00'00"00
STW
B
S1
ALARM
A L
A
7:45
C

FIG.19

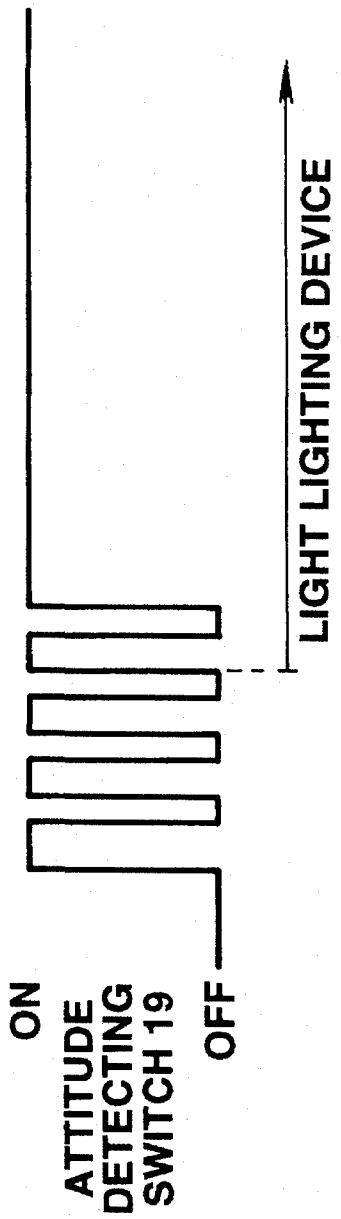

FIG.20A

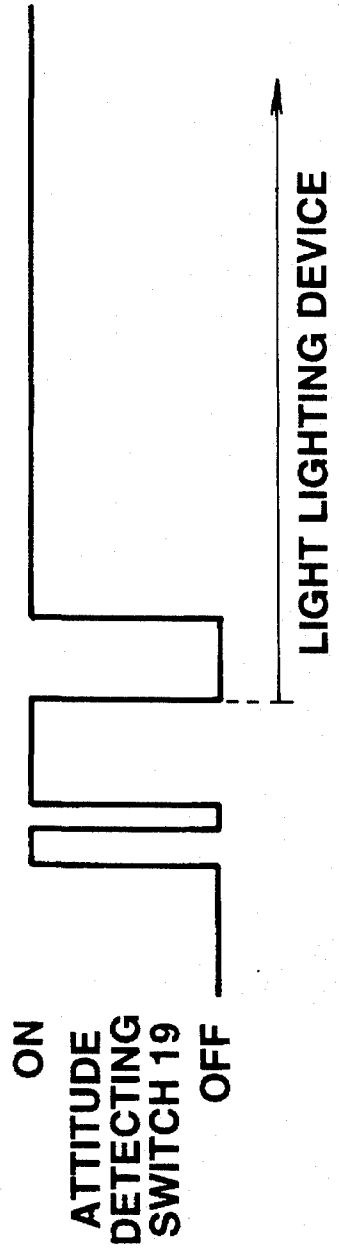

FIG.20B

SWITCH DEVICE AND ELECTRONIC INSTRUMENTS EQUIPPED WITH THE SWITCH DEVICE

BACKGROUND OF THE INVENTION

1. Field of the Invention

This invention relates to a switch device suitable to an electronic instrument to be mounted on a wrist, such as a wristwatch, and the electronic instrument itself.

2. Description of the Related Art

Recently, wristwatches which can digitally indicate time, date, etc. on a liquid crystal display panel have been widely spread. In such wristwatches, data displayed on the liquid crystal display panel can be seen with ambient light in the daytime, but cannot be seen in the nighttime if there is no illumination. Therefore, some wristwatches are equipped with built-in lighting devices for lighting their liquid crystal display panels. In general, a lighting device of this type is turned on by operating a lighting switch. Further, also in the case of an analog watch which indicates time by hands, an EL (Electroluminescence) device, for example, is provided on the dial of the watch for lighting the dial when it has been turned on by a switching operation.

However, the conventional lighting switch built in a wristwatch is hard to operate and is liable to be erroneously operated since it is usually operated in the darkness in the nighttime.

In particular, in the case of a sports type wristwatch equipped with many functions including a stopwatch function, and hence with many operation switches for executing the functions, it is possible that some switch is mistaken for a lighting switch and wrongly operated, to thereby alter indicated data unintentionally.

Moreover, the lighting device is liable to be unintentionally turned on, with the result that power consumption may increase and the battery built in the wristwatch may have its service life shortened.

SUMMARY OF THE INVENTION

It is the object of the invention to provide a switch device capable of operating various devices built in an electronic instrument in a reliable manner and reducing the power consumption, and the electronic instrument itself with the switch device.

To attain the object, there is provided an electronic instrument, comprising:

display means for displaying data;

attitude-detecting switch means for detecting the attitude of the instrument itself and outputting a switch signal when the instrument has assumed a predetermined attitude;

a lighting device responsive to the switch signal from the attitude-detecting switch means for lighting the display means; and

control means for validating or invalidating the operation of the lighting device based on the switch signal.

In the invention constructed as above, the switch device can operate in a reliable manner without being unintentionally turned on and off. Further, since unintentional turning on and off of the lighting device is prevented, the power consumption of the electronic instrument can be saved.

Additional objects and advantages of the invention will be set forth in the description which follows, and in part will be obvious from the description, or may be learned by practice of the invention. The objects and advantages of the invention may be realized and obtained by means of the instrumentalities and combinations particularly pointed out in the appended claims.

BRIEF DESCRIPTION OF THE DRAWINGS

The accompanying drawings, which are incorporated in and constitute a part of the specification, illustrate presently preferred embodiments of the invention and, together with the general description given above and the detailed description of the preferred embodiments given below, serve to explain the principles of the invention.

FIG. **1** is a plan view, showing an appearance of a digital electronic wristwatch according to the invention;

FIG. **2** is a block diagram, showing the circuit of the digital electronic wristwatch of FIG. **1**;

FIG. **3** is a view, showing the structure of a RAM appearing in FIG. **2**;

FIG. **4** is a cross sectional view, showing an attitude detecting switch;

FIG. **5** is a view, taken along lines A—A of FIG. **4**;

FIG. **6** is a view, showing a state in which the digital electronic wristwatch of FIG. **1** mounted on a wrist of a person is being swung forward and backward;

FIG. **7** is a view, showing a state in which the digital electronic wristwatch of FIG. **1** mounted on a wrist of a person are repeatedly inclined such that 12-o'clock and 6-o'clock direction sides of the wristwatch are situated in the lowest position;

FIG. **8** is a cross sectional view, showing that state of a switch device incorporated in the wristwatch which is assumed when the wristwatch is inclined such that 6-o'clock is situated in the lowest position;

FIG. **9** is a cross sectional view, showing that state of the switch device which is assumed when the wristwatch is inclined such that 12-o'clock is situated in the lowest position;

FIG. **10** is a flowchart, useful in explaining lighting control processing performed by a CPU shown in FIG. **2**;

FIG. **11** is a view, showing conditions for detecting that On-signal output from the attitude detecting switch which is processed in the lighting control processing of FIG. **10**;

FIG. **12** is a front view, showing an appearance of a wristwatch according to a second embodiment of the invention;

FIG. **13** is a block diagram showing the circuit of the second embodiment;

FIG. **14** is a view, showing the structure of a register employed in a RAM shown in FIG. **13**;

FIG. **15** is a view, showing an LCD **17** shown in FIG. **13**;

FIG. **16** is a flowchart, useful in explaining the overall operation;

FIG. **17** is a flowchart, useful in explaining key processing shown in FIG. **16**;

FIG. **18** is a flowchart, useful in explaining detection processing shown in FIG. **16**;

FIG. **19** is a view, useful in explaining the state of indication; and

FIGS. **20**A and **20**B are views, showing detection signals of an attitude detection switch **19**.

DETAILED DESCRIPTION OF THE PREFERRED EMBODIMENTS

First Embodiment

FIG. **1** is a plan view, showing an appearance of a digital electronic wristwatch **1** (hereinafter referred to simply as "wristwatch **1**"). The wristwatch **1** includes a case **2**, a liquid crystal display **3** (corresponding to an LCD **17** which will be described later) mounted on the case **2** for digitally indicating time and date thereon, and an attitude switch **4** contained in the case **2** for detecting an inclination of the wristwatch **1** and performing a switching operation.

FIG. **2** is a block diagram, showing the circuit of the wristwatch **1**. **10** As is shown in FIG. **2**, the wristwatch **1** comprises an oscillator **11**, a frequency divider **12**, a ROM **13**, a RAM **14**, a CPU **15**, a display driver **16**, an LCD **17**, a key input section **18**, an attitude detection switch **19**, a driver **20** and a lighting device **21**.

The oscillator **11** oscillates a fundamental clock signal of e.g. 32.768 kHz for generating operation timing clock signals for each section in the wristwatch **1**, and outputs the fundamental clock signal to the frequency divider **12**.

The frequency divider **12** frequency-divides the fundamental clock signal to produce a timing signal of a predetermined frequency and a clock signal of a predetermined frequency, and supplies the signals to the CPU **11** and other circuits.

The ROM (Read Only Memory) **13** stores micro programs to be executed by the CPU **15**, such as a clock processing program, a display processing program and an illumination control program.

The RAM (Random Access Memory) **14** has, as shown in FIG. **3**, a display register **14***a* for storing display data, a clock register **14***b* for storing present time data, a timer register **14***c* for setting a detection point of time at which the detection signal of the attitude detection switch **19** is to be detected, and a counter register **14***d* for counting the number of occasions in which the detection signal of the switch **19** is detected, and storing the counted value N.

The CPU (Central Processing Unit) **15** controls each section in the wristwatch **1** in accordance with the control programs stored in the ROM **13**. Specifically, upon receiving a time-measuring clock signal output from the frequency divider, the CPU **15** performs clock processing and display processing, thereby supplying the present time data registered in the clock register **14***b* of the RAM **14**, to the display register **14***a* of the same, outputting time/date data to the display driver **16**, and causing the LCD **17** to display the time/date data. The CPU **15** further performs various processing other than the above in accordance with various instruction signals input from the key input section **18**.

Moreover, the CPU **15** executes illumination control processing, which will be explained later, thereby outputting a control signal to the driver **20** to turn on the lighting device **21**.

The display driver **16** drives the LCD **17** to display time/date data, in accordance with display data obtained as a result of the clock processing and the display processing in the CPU **15**, and display data obtained as a result of the processing in the CPU **15** according to the key operation of the key input section **18**.

The key input section **18**, which comprises a time setting key, a date setting key, etc., supplies the CPU **15** with an instruction signal obtained by a key operation.

The attitude detection switch **19**, which has an attitude detection function, corresponds to the attitude detection switch **4** contained in the case **2** of the wristwatch **1**. Referring then to FIGS. **4** and **5**, the attitude detection switch **4** will be explained.

The attitude detection switch **4** is contained in the wristwatch **1** such that its right and left directions (in FIG. **4**) correspond to 12-o'clock and 6-o'clock directions of the wristwatch **1**, respectively. Further, an upper portion of the detection switch **4** is positioned in an upper portion of the wristwatch **1** parallel to the upper surface of e.g. the case **2**, while a lower portion of the switch **4** is positioned in a lower portion of the wristwatch **1** parallel to the lower surface of e.g. the case **2**.

The attitude detection switch **4** has a housing **41** of a synthetic resin and first and second conductive stationary contacts **42** and **43** opposed to each other and received in a hole **41***a* which is formed in the housing **41**. More specifically, the first stationary contact **42** is provided on that side end of the hole **41***a* which is located in the 12-o'clock direction of the wristwatch **1**, and the second stationary contact **43** is provided on that side end of the hole **41***a* which is located in the 6-o'clock direction of the wristwatch **1**.

The first stationary contact **42** has an extension **42***a* extending in the 6-o'clock direction of the wristwatch, while the second stationary contact **43** has an extension **43***a* extending in the 12-o'clock direction of the wristwatch **1** and opposed to the extension **42***a*. The extension **42***a* of the first stationary contact **42** has an inclined end portion **42***b* obliquely extending toward the extension **43***a* of the second stationary contact **43**.

Metallic caps **44***a* and **44***b* are provided on the outer surfaces of the stationary contacts **42** and **43**, respectively. The caps **44***a* and **44***b* are connected to a circuit board (not shown) by means of solder, thereby electrically connecting the first and second stationary contacts **42** and **43** to the CPU **15**.

As is shown in FIG. **5** taken along lines A—A of FIG. **4**, the housing **41** has an inclined inner surface **41***b* inclined to the extension **42***a* of the first stationary contact **42**.

Conductive ball members **45***a* and **45***b* of the same size are movably contained in the hole **41***a*. These ball members have a diameter smaller than the distance between the extensions **42***a* and **43***a* and larger than the distance between the end of the inclined end portion **42***b* and the extension **43***a*.

The operation of the attitude switch **4** will now be explained.

The wristwatch **1** is mounted on a wrist of a person as is shown in FIGS. **6** and **7**. In a usual state as shown in FIG. **6** wherein the wrist with the wristwatch **1** is regularly swung, the attitude detection switch **4** is inclined such that a 3-o'clock direction side of the wristwatch **1** is situated in a lowest position.

In this state, in the attitude detection switch **4**, the conductive ball members **45***a* and **45***b* move in the 3-o'clock direction of the wristwatch **1** by their own weights, and the first and second stationary contacts **42** and **43** are electrically disconnected from each other as indicated by the broken line A in FIG. **5**.

At this time, the inclined end portion **42***b*, which is formed as a distal end of the extension **42***a*, displaces the conductive ball member **45***a* toward the second stationary contact **43** as indicated by the broken line B in FIG. **5**. However, since the wristwatch **1** inclines such that the 3-o'clock direction side of the wristwatch **1** is situated in the lowest position, the ball member **45***a* and hence the first stationary contact **42** is prevented from contacting the second stationary contact **43**.

Thus, the attitude switch **4** is kept in the Off-state.

Further, where the arm is bent as shown in FIG. **7** such that the wristwatch **1** is situated in front of the eyes, and the 6-o'clock direction side of the wristwatch **1** is situated in the lowest position, the ball members **45***a* and **45***b* of the attitude detection switch **4** move by their own weights in the 6-o'clock direction of the wristwatch **1**, as is shown in FIG. **8**.

When the conductive ball member **45***a* positioned close to the second stationary contact **43** has moved toward the second stationary contact **43**, it is guided to the extension **43***a* of the second stationary contact **43** by means of the inclined end portion **42***b* of the first stationary contact **42**, and brought into contact with the extension **43***a*. As a result, the inclined end portion **42***b* of the extension **42***a* of the first stationary contact **42** is electrically connected to the extension **43***a* of the second stationary contact **43** via the ball member **45***a*, thereby turning on the attitude detection switch **4**.

Further, the conductive ball member **45***b* positioned close to the first stationary contact **42** moves by its own weight toward the second stationary contact **43**, thereby urging the conductive ball member **45***a* between the extension **42***a* of the first stationary contact **42** and the extension **43***a* of the second stationary contact **43**. Thus, the first and second stationary contacts **42** and **43** are securely connected.

On the other hand, where the arm is bent such that the 12-o'clock direction side of the dial of the wristwatch **1** is situated in the lowest position, the ball members **45***a* and **45***b* of the attitude detection switch **4** move by their own weights in the 12-o'clock direction of the wristwatch **1**, as is shown in FIG. **9**.

When the conductive ball member **45***a* positioned close to the second stationary contact **43** has moved from the inclined end portion **42***b* to the extension **42***a*, the first and second stationary contacts **42** and **43** are again separated from each other.

When the wristwatch **1** has been repeatedly inclined in the 6-o'clock and 12-o'clock directions, the attitude detection switch **4** is repeatedly turned on and off. When the On-signal indicative of the on-state of the switch **4** has been repeatedly output to the CPU **15**, the CPU **15** executes illumination control processing, which will be explained below, thereby outputting a control signal to the driver **20**. As a result, the driver **20** turns on the lighting device **21** to illuminate the LCD **17**.

Referring then to FIG. **10**, the illumination control processing executed by the CPU **15** will be explained.

When the 6-o'clock direction side of the wristwatch **1** mounted on the wrist has been situated in the lowest position as shown in FIGS. **7** and **8**, the On-signal is supplied from the attitude detection switch **19** to the CPU **15** and detected by the same (step **S1**). In the next step **S2**, it is determined whether or not a timer for successively adding the values of the timer register **14***c* of the RAM **14** with the passing of time operates. If the timer does not operate, the timer is started to operate (step **S3**). In a step **S4**, the value N of the counter register **14***d* of the RAM **14** is incremented by +1.

Subsequently, it is determined in a step **S5** whether or not the incremented count value N is higher than a predetermined reference value **N0** (e.g. 5). If the count value N is higher than the reference value of 5, a control signal is supplied to the driver **20** to light the lighting device **21** for a predetermined time period (step **S6**), thereby clearing the count value of the counter register **14***d* (step **S8**), resetting the timer (step **S9**) and terminating the processing.

In the above processing, the lighting device **21** is lighted after the On-signal is input from the attitude detection switch **19** more than 5 times (i.e. the signal is input 6 times). FIG. **11** shows the relationship between the On-signal and the detection time. In the FIG. **11** case, the lighting device **21** is lighted for e.g. 3 seconds.

On the other hand, if it is determined in the step **S5** that the count value N is lower than the reference value of 5, it is determined in a step **S7** whether or not the value of the timer has reached a predetermined value, i.e. whether or not the value of the timer register **14***d* exceeds 3 seconds. If the timer value does not reach the predetermined value, the program returns to the step **S1** and the processes in the steps **S1** to **S6** are repeated. If, on the other hand, the timer value reaches the predetermined value, the count value of the counter register **14***d* is cleared in the step **S8**, thereby resetting the timer in the step **S9** and terminating the processing.

In summary, the lighting device **21** can be lighted for a predetermined time period (e.g. 3 seconds) only when the On-signal from the attitude detection switch **4** has been detected six times within the predetermined time period, as a result of repeatedly inclining the wristwatch **1** in the 6-o'clock and 12-o'clock directions of the wristwatch **1**. Therefore, the lighting device **21** is prevented during walking from being turned on and off unintentionally, and can be lighted in a reliable manner without erroneous operations of other switches.

As a result, unintentional lighting of the lighting device can be avoided, thereby saving the power consumption of the wristwatch **1** and lengthening the life of the built-in battery.

Although in the above embodiment, the lighting device **21** is lighted when the On-signal from the attitude detection switch **19** is detected six times within 3 seconds, the conditions for lighting the device **21** may be altered in various manners.

Further, although the lighting device **21** consists of the EL (Electroluminescence) device located below the LCD **17**, it may be formed of a lamp, a LED, etc.

Second Embodiment

FIGS. **12** to **15** show a second embodiment of the invention.

As is shown in FIG. **12**, a wristwatch **51** according to the second embodiment includes a case **52**, a liquid crystal display **53** mounted on the case **52** for digitally indicating time and date thereon, and an attitude switch **19** contained in the case **52** for detecting an inclination of the wristwatch **1**. A lighting device consisting of an electroluminescence device, etc., explained later, is provided on the reverse surface of the liquid crystal display **53**. Further, two switches **S3** and **S4** are mounted on the upper surface of the case **52**, and three switches **S1** to **S3** are mounted on the peripheral surface of the case **52**.

The switch **S1** is a mode switch to be operated to switch the operation mode. The switch **S2** is provided for switching the operation mode between an EL auto-off mode for keeping the lighting device in the Off-state even if an On-signal is supplied from the attitude detection switch **19**, and an EL auto-on mode for automatically turning on the lighting device when the On-signal has been supplied from the switch **19**. The switch **S3** is provided for manually lighting the lighting device. The switches **S4** and **S5** are provided for correcting time, etc.

FIG. **13** is a block diagram, showing the circuit of the wristwatch **52**. The FIG. **13** circuit differs from the FIG. **2**

circuit only in that the former employs a speaker **60** driven by a signal from the CPU **15**. Therefore, the other elements in FIG. **13** are denoted by corresponding reference numerals, and explanation will be abbreviated. The key input section **18** includes the switches S1 to S5, and the RAM **14** includes various registers which will be explained below with reference to FIG. **14**. The LCD **17** includes a display segment which will be explained later with reference to FIG. **15**. The CPU **15** stores a microprogram for executing processing as indicated by the flowcharts of FIGS. **16** to **18**.

FIG. **14** shows the structure of registers in the RAM **14**. The RAM **14** includes a display register **61** which stores display data for displaying data on the LCD **17**, a present-time register **62** for storing data indicative of present date and time, a three-hour timer **63** for measuring a period of time elapsed after automatic turn-on of the lighting device, an alarm time register **64** for storing a set alarm time, a stop-watch register **65** for storing a period of time for which the stop-watch function is executed, an occasion number register **66** for storing the number of occasions in which a predetermined attitude is held for a predetermined time period (e.g. 2 seconds), an accumulated-time register **67** for storing an accumulated value of time periods for which the predetermined attitude is held, and a 2-second timer **68** used to measure 2 seconds.

Moreover, the RAM **14** includes a mode register M for storing values corresponding to operation modes, a register **L0** storing data indicative of whether the lighting device is to be automatically turned on or off, a register **L1** for temporarily storing the value of the register **L0**, a flag F indicative of whether or not the stop-watch function is being executed, and a flag G indicative of whether or not the lighting device **21** is being lighted.

The mode register M stores "0" when the operation mode is a clock mode, "1" when it is the stop-watch mode, and "2" when it is an alarm set mode. The register **L0** stores "0" when the EL auto-off mode is set, and "1" when the EL auto-on mode is set. The value of the flag F is "1" while the stop-watch function is executed, and "0" while the stop-watch function is not executed. The value of the flag G is "1" while the lighting device **21** is in the On-state, and "0" while it is in the Off-state.

FIG. **15** shows the display segment of the LCD **17**. During the stop-watch function being executed, for example, a lap time is displayed on an upper portion X, and a time period for which the stop-watch function is executed is displayed on a lower portion Y. Further, when the EL auto-on or -off mode is set, an EL auto display mark **21***a* is lighted to inform the user of the mode.

The attitude detection switch **19** has a structure similar to that of the switch shown in FIGS. **4** to **9**, and hence its explanation will be omitted.

The operation of the second embodiment will be explained with reference to the flowcharts of FIGS. **16** to **18**.

Referring to the flowchart of FIG. **16**, the CPU **15** is usually in a halt state as in a step **S0**. When a point of time at which time detection is to be started has been reached, the program proceeds to a step **S2**, where the present time is measured. When, on the other hand, key input has been detected, the program proceeds to a step **S1**, where key processing is performed.

Referring then to the flowchart of FIG. **17**, the key processing in the step **S1** will be explained.

First, it is determined in a step **S31** whether or not a key **S1** is being operated. If it is determined that the key **S1** is being operated, i.e. if the answer to the question of the step **S31** is Yes, the program proceeds to a step **S32**, where the value of the mode register M is incremented by "1". In the next step **S33**, it is determined whether or not the value of the mode register M is "1", i.e. whether or not the present operation mode is the stop-watch mode. If it is determined that the stop-watch mode is set, the program proceeds to a step **S34**, where the value of the register **L0** is transmitted to the register **L1**, and "1" is set in the register **L0** in a step **S35**, thereby setting the EL auto-on mode in which the lighting device **21** is automatically lighted by an On-signal from the attitude control switch **19**.

As described above, when the operation mode has been switched to the stop-watch mode (M=1), "1" is set in the register **L0**, and the EL auto-on mode is set in which the lighting device **21** is automatically lighted by an On-signal from the attitude control switch **19**. At this time, the previous value "0" of the register **L0** is retreated to the register **L1**. The previous value "0" is returned to the register **L0** after the stop-watch mode is switched to the alarm set mode (M=2) by means of processing, which will be explained later.

If it is determined in the step **S33** that the value of the mode register M is not "1", the program proceeds to a step **S36**, where it is determined whether or not the value of the mode register M is "2", i.e. whether or not the operation mode is the alarm set mode. If it is determined that the alarm set mode (M=2) is set, the program proceeds to a step **S37**, where the value "0" retreated in the register **L1** is returned to the register **L0**.

If, on the other hand, it is determined in the step **S31** that the key **S1** is not being operated, the program proceeds to a step **S38**, where it is determined whether or not a key **S2** is being operated. If it is determined that the key **S2** is being operated, it is determined in the next step **S39** whether or not the value of the mode register M is "0". If the value is "0", i.e. if the key **S2** is being operated in the clock mode (M=0), the value of the register **L0** is inverted in a step **S40**, and the three-hour timer **33** is cleared in a step **S41**.

If it is determined in the step **S39** that the value of the mode register M is not "0", the program proceeds to a step **S42**, where it is determined whether or not the value of the mode register M is "1", i.e. whether or not the key **S2** is being operated in the stop-watch mode (M=1). If it is determined that the value is "1", the value of the flag F is inverted in a step **S43**.

If the value of the flag F is "1", the stop-watch function is executed to measure a period of time. In the stop-watch mode (M=1), the key **S2** is operated to start or stop the stop-watch operation.

If it is determined in the step **S38** that the key **S2** is not being operated, the program proceeds to a step **S44**, where it is determined whether or not a key **S3** is being operated. If it is determined that the key **S3** is being operated, the value of the flag G is set to "1", thereby lighting the lighting device **21** while the key **S3** is operated.

If it is determined in the step **S44** that the key **S3** is not being operated, which means that a key **S4** or **S5** is being operated, the program proceeds to a step **S46** where other key processing is performed.

The switching of the operation mode performed when the key **S1** is being operated will be explained with reference to FIG. **19**. First, when the key **S1** has been operated in the clock mode, as indicated by A in FIG. **19**, for displaying date and present time, the clock mode is switched to the stop-watch mode as indicated by B in FIG. **19**. If the key **S2** is operated in the stop-watch mode, time measurement is started. Again operating the key **S2** switches the stop-watch

mode to the alarm set mode as indicated by C in FIG. **19**. In the alarm set mode, alarming time can be set or released. If the key **S1** is operated in the alarm set mode, the operation mode is returned to the clock mode.

Referring again to FIG. **16**, when the CPU **15** is in a halt state, the present time measurement processing in the step **S2** is executed. In the present time measurement processing, the present time is measured on the basis of a clock signal output from the frequency divider, and date and time data obtained by the present time measurement are stored in the present time register **62**. In the next step **S3**, it is determined whether or not the value of the flag F is "1", i.e. whether or not the stop-watch function is being executed. If the value of the flag F is "1" and the stop-watch function is being executed, the program proceeds to a step **S4**, where time measurement processing is performed. In the time measurement processing, the pulses of the clock signal output from the frequency divider are counted to thereby measure a period of time elapsed from the start of the stop-watch function, and the measured time period is stored in the stop-watch register **65**.

If the answer to the question of the step **S3** is No, or after the processing in the step **S4**, it is determined in a step **S5** whether or not the present time is identical to the set alarm time. If it is determined that they are identical to each other, i.e. if the answer to the question of the step **S5** is Yes, an alarm sound is generated from the speaker **60** in the next step **S6**.

In a step **S7**, it is determined whether or not the value of the register **L0** is "1". If the value of the register **L0** is "1", i.e. if the mode for lighting the lighting device **21** is set (i.e. the answer to the **10** question of the step **S7** is Yes), the value of the three-hour timer **63** is incremented by "1" in a step **S8**, and it is determined in a step **S9** whether or not the time period measured by the three-hour timer **63** has reached 3 hours. If it is determined in step **S9** that the time period has reached 3 hours, the value of "0" is set in the register **L0** to switch the operation mode to the EL auto-off mode for prohibiting lighting of the lighting device **21**.

In other words, even if the mode for lighting the lighting device **21** when the On-signal is supplied from the attitude control switch **19** is set, the mode is switched to the EL auto-off mode three hours after the setting of the first-mentioned mode, thereby preventing the lighting device **21** from lighting.

If it is determined in the step **S9** that three hours has not yet elapsed, i.e. if the answer to the question of the step **S9** is No, the program skips to a step **S11**, where it is determined whether or not the value of the flag G is "1". If the value of the flag G is "1", the lighting device **21** is lighted in the next step **S12**, and the value of the 2-second timer **68** is incremented by "1" in a step **S13**. In a step **S14**, it is determined whether or not the value of the 2-second timer **68** has reached 2 seconds. If the value has reached 2 seconds, the value of the flag G is set to "0" in a step **S15**, and the occasion number register **66** and the accumulation register **67** are cleared in a step **S16**.

In other words, in the mode for lighting the lighting device **21**, the lighting device **21** is automatically turned off 2 seconds after it is turned on.

Thereafter, in a step **S17**, it is determined whether or not an attitude detection signal as the output signal of the attitude detection switch **19** has been detected. If detected, the program proceeds to a step **S18**, where detection processing is executed.

The detection processing in the step **S18** will be explained with reference to the flowchart of FIG. **18**.

First, in a step **S51**, the number of occasions in which the attitude detection switch **19** is turned on is counted, and the counted value is stored in the occasion number register **66**. In a step **S52**, an accumulated period of time for which the attitude detection switch **19** is in the On-state is counted, and the counted value is stored in the accumulation register **67**. In a step **S53**, it is determined whether or not the value of the occasion number register **66** exceeds 3. If the value is 3 or less, it is determined in a step **S54** whether or not the accumulated time period obtained by the accumulation register **67** exceeds 250 ms.

If it is determined in the step **S53** that the number of the occasions in which the attitude detection switch **19** is turned on exceeds 3, or if it is determined in the step **S54** that the accumulated time period for which the attitude detection switch is turned on exceeds 250 ms, it is determined that the wristwatch **1** has taken a predetermined attitude, in other words, it is determined, for example, that the user has inclined the wristwatch **1** to watch the LCD **17** such that the 6-o'clock direction side of the wristwatch **1** is situated in the lowest position. In a step **S55**, the value of the flag G is set to "1" to light the lighting device **21**.

If, on the other hand, the accumulated time period of the On-state of the attitude detection switch **19** is equal to or less than 250 ms, it is determined that the wristwatch **1** has not taken the attitude for enabling the LCD **17** to be watched, followed by the termination of the processing.

In summary, if it is determined that the number of the occasions in which the attitude detection switch **19** is turned on exceeds a predetermined number (e.g. 3), or if it is determined that the accumulated time period for which the attitude detection switch is turned on exceeds a predetermined time period (e.g. 250), the states of switches, which includes the attitude detection switch **19** of a structure whose On-state or Off-state is hard to keep in a reliable manner, can be accurately detected by lighting the lighting device **21**.

After the detection processing in the step **S18** of FIG. **16**, display processing in a step **S19** is executed. If in the display processing, the present operation mode is, for example, the stop-watch mode, a time period presently measured by the stop-watch function is displayed on the LCD **17**.

FIGS. **20**A and **20**B show the waveforms of signals output from the attitude detection switch **19**. In these figures, the high level indicates the On-state of the switch **19**, and the low level the Off-state of the same.

FIG. **20**A shows the waveform of a signal obtained when the attitude detection switch **19** is repeatedly turned on and off. After the On-state and Off-state are repeated four times, it is determined that the user has inclined the wristwatch **1** such that the 6-o'clock direction side of the wristwatch is situated in the lowest position. As a result, the lighting device **21** is lighted.

FIG. **20**B shows the waveform of a signal obtained when the On-state of the switch **19** has continued for 250 ms or more although the turn-on and -off are repeated only twice. After the On-state continues 250 ms or more, it is determined that the user has inclined the wristwatch **1** to watch the LCD **17** such that the 6-o'clock direction side of the wristwatch is situated in the lowest position. As a result, the lighting device **21** is lighted.

Although in the above-described embodiments, the lighting device **21** is lighted by the attitude detection switch **19** for 3 hours only in the stop-watch mode, the invention may be modified such that such control is done in other modes.

Moreover, the invention may be modified such that an operation switch for switching the value of the register **L0**

from "0" to "1" or "1" to "0" is employed, and that the attitude detection switch **19** is operated to light the lighting device **21** for a predetermined time period only when the value of the register **L0** is set to "1" by the operation switch.

In addition, although in the above embodiments, the invention is applied to the electronic digital wristwatch, it is also applicable to an analog wristwatch with hands or to an electronic instrument other than the wristwatches. Furthermore, the structure of the attitude detection switch **19** is not limited to that employed in the embodiments.

As explained above, in the embodiments, the lighting device **21** is lighted while the key **S3** is operated, so as to enable data on the LCD **17** to be read even in the darkness. Further, the lighting device **21** can be lighted and extinguished in accordance with the attitude of the instrument. Therefore, the lighting device can be lighted without switch operation, thus realizing an electronic instrument having an attitude detecting function easy to execute. Moreover, since the mode for facilitating the control of the turn-on and -off of the lighting device to accord with the attitude of the instrument, and the other modes can be selected, the lighting device is prevented from lighting when illumination is not necessary.

Additional advantages and modifications will readily occur to those skilled in the art. Therefore, the invention in its broader aspects is not limited to the specific details, and representative devices shown and described herein. Accordingly, various modifications may be made without departing from the spirit or scope of the general inventive concept as defined by the appended claims and their equivalents.

What is claimed is:

1. An electronic instrument provided with display means for displaying data and a lighting device for illuminating the display means, comprising:

attitude-detecting switch means for detecting an attitude of the electronic instrument and for outputting a switch signal when the electronic instrument assumes a predetermined attitude;

control data storing means for storing one of (i) operation control data for causing the lighting device to illuminate the display means, and (ii) non-operation control data for precluding the lighting device from illuminating the display means;

determining means for determining whether the control data storing means has stored therein the operation control data or the non-operation control data; and

illumination operation control means for (i) controlling the lighting device to illuminate the display means when (a) the attitude-detecting switch means outputs the switch signal, and (b) the determining means determines that the control data storing means has stored therein the operation control data, and (ii) for precluding the lighting device from illuminating the display means when the determining means determines that the control data storing means has stored therein non-operation control data.

2. The electronic instrument according to claim **1**, wherein the illumination operation control means includes time-measuring means for measuring a predetermined period of time, counting means for counting a number of pulses of the switch signal output by the attitude-detecting switch means during a time-measuring operation of the time-measuring means, and means for controlling the lighting device to illuminate the display means when the number of pulses counted by the counting means reaches a predetermined value.

3. The electronic instrument according to claim **1**, wherein the display means comprises a liquid crystal display device, and the lighting device comprises an electroluminescence device.

4. The electronic instrument according to claim **1**, wherein the attitude-detecting switch means includes a case, first and second stationary contacts located apart from each other in the case, and a conductive member movably contained in the case for electrically connecting the first and second stationary contacts to each other when the conductive member is situated in a predetermined position, thereby causing the switch signal to be output.

5. The electronic instrument according to claim **1**, further comprising a selector switch for switching the electronic instrument between (i) a non-operation mode wherein the lighting device is precluded from illuminating the display means, and (ii) an operation mode wherein the lighting device is enabled to illuminate the display device when the switch signal is output from the attitude-detecting switch means.

6. The electronic instrument according to claim **5**, further comprising indicating means for indicating whether the electronic instrument is set to the non-operation mode or the operation mode.

7. The electronic instrument according to claim **5**, wherein the non-operation mode comprises at least a time display mode for displaying the present time, and the operation mode comprises at least a mode for displaying stop-watch data.

8. The electronic instrument according to claim **1**, further comprising timer means for switching the electronic instrument to the non-operation mode at a predetermined time after the selector switch switches the electronic instrument to the operation mode.

9. The electronic instrument according to claim **1**, further comprising present time-detecting means for detecting the present time, and wherein the present time is displayed on the display means.

10. The electronic instrument according to claim **1**, wherein the display means, the lighting device, the attitude-detecting switch means and the illumination operation control means are disposed in a case of a wristwatch.

* * * * *