OIPE IAP
JAN 30 2006
PATENT & TRADEMARK OFFICE

Docket No.: 42P21078

IN THE UNITED STATES PATENT AND TRADEMARK OFFICE

In Re the Application of:

JOHN SADOWSKY, ET AL.

Application No.: 11/291,800

Filed: November 30, 2005

For: **INCREASED DISCRETE POINT PROCESSING IN AN OFDM COMMUNICATION SYSTEM**

Art Group: 2631

Examiner:

INFORMATION DISCLOSURE STATEMENT UNDER 37 C.F.R. §1.97

Commissioner for Patents
P.O. Box 1450
Alexandria, VA 22313-1450

In accordance with the duty of disclosure, enclosed is a copy of IDS Citation Form PTO/SB/08 or PTO-1449, together with copies of the documents cited on that form, except for copies not required to be submitted (e.g., copies of U.S. patents and U.S. published patent applications need not be enclosed). This IDS and IDS Citation Form are being submitted within three (3) months of filing of the application. It is respectfully requested that the cited references be considered and that the enclosed copy of PTO/SB/08 be initialed by the Examiner to indicate such consideration and a copy thereof returned to applicant(s).

Exhibit 1010
Nokia v. Woodbury Wireless Inc.
Page 000001

The submission of this Information Disclosure Statement is not to be construed as a representation that a search has been made in the subject application and is not to be construed as an admission that the information cited in this statement is material to patentability.

Please charge any fees due to Deposit Account 02-2666. A duplicate copy of the Fee Transmittal (PTO/SB/17) is enclosed for this purpose.

Respectfully submitted,

BLAKELY, SOKOLOFF, TAYLOR & ZAFMAN LLP

Date: January 24, 2006

Vincent H. Anderson, Reg. No. 54,962

12400 Wilshire Boulevard, 7th Floor
Los Angeles, CA 90025
Telephone: (503) 439-8778

I hereby certify that this correspondence is being deposited with the United States Postal Service on the date shown below with sufficient postage as first class mail in an envelope addressed to: Mail Stop Missing Parts, Commissioner for Patents, P.O. Box 1450, Alexandria, VA 22313-1450.

Theresa Belland — *01-24-06*

Theresa Belland — ***Date***

Exhibit 1010
Nokia v. Woodbury Wireless Inc.
Page 000002

OIPE IAP
JAN 30 2006
PATENT & TRADEMARK OFFICE

Substitute for form 1449A/PTO

INFORMATION DISCLOSURE STATEMENT BY APPLICANT

Sheet	1	of	1

Complete if Known	
Application Number	11/291,800
Filing Date	November 30, 2005
First Named Inventor	John Sadowsky
Art Unit	2631
Examiner Name	
Attorney Docket Number	42P21078

NON PATENT LITERATURE DOCUMENTS

Examiner Initials*	Cite No.[1]	Include name of the author (in CAPITAL LETTERS), title of the article (when appropriate), title of the item (book, magazine, journal, serial, symposium, catalog, etc.), date, page(s), volume-issue number(s), publisher, city and/or country where published.	T[2]
		IEEE P802.11 Wireless LANs, "TGn Sync Proposal Technical Specification", May 18, 2005, pg. 1-130, Document ID IEEE 802.11-04/0889r6.	

Examiner Signature		Date Considered	

*Examiner: Initial if reference considered, whether or not citation is in conformance with MPEP 609. Draw line through citation if not in conformance and not considered. Include copy of this form with next communication.

[1]Applicant's unique citation designation number.[2]Applicant is to place a check mark here if English language Translation is attached.

Based on PTO/SB/08B (08-03) as modified by Blakely, Solokoff, Taylor & Zafman (wlr) 08/11/2003.
Send To: Commissioner for Patents, P.O. Box 1450, Alexandria, VA 22313-1450

11324 U.S. PTO
113005

UTILITY PATENT APPLICATION TRANSMITTAL

(Only for new nonprovisional applications under 37 CFR 1.53(b))

Attorney Docket No.	42P21078
First Inventor	John Sadowsky, et al.
Title	INCREASED DISCRETE POINT PROCESSING IN AN OFDM COMMUNICATION SYSTEM
Express Mail Label No.	EV777143185US

APPLICATION ELEMENTS

See MPEP chapter 600 concerning utility patent application contents

ADDRESS TO: Commissioner for Patents, P.O. Box 1450, Alexandria, VA 22313-1450

1. ☒ Fee Transmittal Form (e.g., PTO/SB/17) *(Submit an original and a duplicate for fee processing)*
2. ☐ Applicant claims small entity status. See 37 CFR 1.27.
3. ☒ Specification *[Total Pages 20]* *(preferred arrangement set forth below)*
   - Descriptive title of the Invention
   - Cross References to Related Applications
   - Statement Regarding Fed sponsored R & D
   - Reference to sequence listing, a table, or a computer program listing appendix
   - Background of the Invention
   - Brief Summary of the Invention
   - Brief Description of the Drawings *(if filed)*
   - Detailed Description
   - Claim(s)
   - Abstract of the Disclosure
4. ☒ Drawing(s) *(35 U.S.C. 113)* *[Total Sheets 6]*
5. Oath or Declaration *[Total Pages _]*
   a. ☐ Newly executed (original or copy)
   b. ☐ Copy from a prior application (37 C.F.R. § 1.63(d)) *(for continuation/divisional with Box 18 completed)*
      i. ☐ DELETION OF INVENTOR(S) Signed statement attached deleting inventor(s) named in the prior application, see 37 CFR 1.63(d)(2) and 1.33(b).
6. ☐ Application Data Sheet. See 37 CFR 1.76
7. ☐ CD-ROM or CD-R in duplicate, large table or Computer Program *(Appendix)*
8. Nucleotide and/or Amino Acid Sequence Submission *(if applicable, all necessary)*
   a. ☐ Computer Readable Form (CRF)
   b. Specification Sequence Listing on:
      i. ☐ CD-ROM or CD-R (2 copies); or
      ii. ☐ paper
   c. ☐ Statements verifying identity of above copies

113009 U.S. PTO 11/291800
113005

9. ☐ Assignment Papers (cover sheet & document(s))
10. ☐ 37 C.F.R. § 3.73(b) Statement *(when there is an assignee)* ☐ Power of Attorney
11. ☐ English Translation Document *(if applicable)*
12. ☐ Information Disclosure Statement (IDS)/PTO-1449 ☐ Copies of IDS Citations
13. ☐ Preliminary Amendment ☐ Application Amended to Reflect Claim of Priority
14. ☒ Return Receipt Postcard (MPEP 503) *(Should be specifically itemized)*
15. ☐ Certified Copy of Priority Document(s) *(if foreign priority is claimed)*
16. ☐ Nonpublication Request under 35 U.S.C. 122 (b)(2)(B)(i). Applicant must attach form PTO/SB/35 or its equivalent.
17. ☒ Other: Check in the amount of $1,200.00

18. If a CONTINUING APPLICATION, *check appropriate box, and supply the requisite information below and in the first sentence of the specification following the title, or in an Application Data Sheet under 37 CFR 1.76:*

☐ Continuation ☐ Divisional ☐ Continuation-in-part (CIP) of prior application No: _____

Prior application Information: *Examiner* _____ *Group/Art Unit:* _____

For CONTINUATION OR DIVISIONAL APPS only: The entire disclosure of the prior application, from which an oath or declaration is supplied under Box 5b, is considered a part of the disclosure of the accompanying continuation or divisional application and is hereby incorporated by reference. The incorporation can only be relied upon when a portion has been inadvertently omitted from the submitted application parts.

19. CORRESPONDENCE ADDRESS

☒ *Customer Number* **08791** *or* ☐ *Correspondence address below*

Name	Blakely, Sokoloff, Taylor & Zafman LLP				
Address	12400 Wilshire Boulevard, 7th Floor				
City	Los Angeles	State	California	Zip Code	90025
Country		Telephone	(503) 439-8778	Fax	(503) 439-6073

Name (Print/Type)	Vincent H. Anderson	Registration No. (Attorney/Agent)	54,962
Signature		Date	11/30/05

Based on PTO/SB/05 (04-04) as modified by Blakely, Sokoloff, Taylor & Zafman (wlr) 06/04/2004.
SEND TO: Mail Stop Patent Application, Commissioner for Patents, P.O. Box 1450, Alexandria, VA 22313-1450

Effective 12/08/2004
Fees pursuant to the Consolidated Appropriations Act, 2005 (H.R. 4818)

FEE TRANSMITTAL for FY 2005

☐ Applicant claims small entity status. See 37 CFR 1.27.

TOTAL AMOUNT OF PAYMENT ($) 1,200.00

Complete if Known	
Application Number	
Filing Date	
First Named Inventor	John Sadowsky
Examiner Name	
Art Unit	
Attorney Docket No.	42P21078

METHOD OF PAYMENT *(check all that apply)*

☒ Check ☐ Credit card ☐ Money Order ☐ None ☐ Other (please identify): _____

☒ Deposit Account Deposit Account Number: 02-2666 Deposit Account Name: Blakely, Sokoloff, Taylor & Zafman LLP

For the above-identified deposit account, the Director is hereby authorized to: (check all that apply)

☐ Charge fee(s) indicated below
☐ Charge fee(s) indicated below, except for the filing fee
☒ Charge any additional fee(s) or underpayment of fee(s) under 37 CFR §§ 1.16, 1.17, 1.18 and 1.20.
☒ Credit any overpayments

FEE CALCULATION

1. BASIC FILING, SEARCH, AND EXAMINATION FEES

	FILING FEES		SEARCH FEES		EXAMINATION FEES		
		Small Entity		Small Entity		Small Entity	
Application Type	Fee ($)	Fee ($)	Fee ($)	Fee ($)	Fee ($)	Fee ($)	Fee(s) Paid ($)
Utility	300	150	500	250	200	100	1,000.00
Design	200	100	100	50	130	65	
Plant	200	100	300	150	160	80	
Reissue	300	150	500	250	600	300	
Provisional	200	100	0	0	0	0	

2. EXCESS CLAIM FEES

Fee Description

Each claim over 20 or, for Reissues, each claim over 20 and more than in the original patent
Each independent claim over 3 or, Reissues, each independent claim more than in the original patent
Multiple independent claims

Total Claims		Extra Claims		Fee ($)		Fee Paid
20	- 20 or HP =	0	X	50.00	=	$0.00

HP = highest number of total claims paid for, if greater than 20

Indep. Claims		Extra Claims		Fee ($)		Fee Paid
4	- 3 or HP =	1	X	200.00	=	$200.00

HP = highest number of independent claims paid for, if greater than 3

Multiple Dependent Claims	
Fee ($)	Fee Paid

3. APPLICATION SIZE FEE

If the specification and drawings exceed 100 sheets of paper, the application size fee due is $250 ($125 for small entity) for each additional 50 sheets of sheets or fraction thereof. See 35 U.S.C. 41(a)(1)(G) and 37 CFR 1.16(s).

Total Sheets		Extra Sheets		Number of each additional 50 or fraction thereof		Fee ($)		Fee Paid ($)
26	- 100 =	-74	/ 50 =	_____ (round up to a whole number)	X	_____	=	_____

4. OTHER FEE(S) — **Fees Paid ($)**

Non-English Specification, $130 fee (no small entity discount) _____
Other: _____ _____
Recording of a patent assignment

5. TOTAL AMOUNT OF PAYMENT ($) 1,200.00

SUBMITTED BY — Complete (if applicable)

Name (Print/Type)	Vincent H. Anderson	Registration No. (Attorney/Agent)	54,962	Telephone	(503) 439-8778
Signature				Date	11/30/05

Based on PTO/SB/17 (10-03) as modified by Blakely, Sokoloff, Taylor & Zafman (wlr) 02/10/2004.
SEND TO: Mail Stop Patent Application, Commissioner for Patents, P.O. Box 1450, Alexandria, VA 22313-1450

Attorney Docket No.: 42P21078 **PATENT**

UNITED STATES PATENT APPLICATION

FOR

INCREASED DISCRETE POINT PROCESSING IN AN OFDM COMMUNICATION SYSTEM

INVENTORS:

JOHN SADOWSKY
ALEXANDER A. MALTSEV
VADIM S. SERGEYEV
ALEXEI V. DAVYDOV

PREPARED BY:

BLAKELY, SOKOLOFF, TAYLOR & ZAFMAN, LLP
12400 WILSHIRE BOULEVARD
SEVENTH FLOOR
LOS ANGELES, CA 90025-1026

(503) 439-8778

EXPRESS MAIL NO.: EV777143185US

INCREASED DISCRETE POINT PROCESSING IN AN OFDM COMMUNICATION SYSTEM

FIELD

[0001] Embodiments of the invention relate to wireless communication systems, and more particularly to wireless, multi-carrier communication systems.

BACKGROUND

[0002] An OFDM (orthogonal frequency division multiplexing) system provides enhanced operation over existing Wi-Fi (Wireless Fidelity) wireless channels while maintaining a certain level of compatibility with existing Wi-Fi (e.g., IEEE (Institute of Electrical and Electronics Engineers) Std. 802.11a, 1999 (the "802.11a standard"), IEEE Std. 802.11g, June 27, 2003 (the "802.11g standard"), which may collectively be referred to herein as "existing Wi-Fi") systems. Next generation Wi-Fi developments seek to increase the capabilities of wireless local area networks (WLANs), and may be based on, or otherwise compatible with the proposal IEEE P802.11n, May 2005 (referred to herein as "next-generation Wi-Fi").

[0003] The development of both existing and next-generation Wi-Fi networking aims to increase data throughput. The main enabling technologies for next-generation Wi-Fi systems to achieve increase data throughput are the use of several existing Wi-Fi channels in parallel, and the use of MIMO (multiple-input, multiple-output) techniques. However, another goal of next-generation Wi-Fi networking is backward compatibility at the physical layer (PHY) with existing Wi-Fi systems. Backward compatibility reduces or prevents the destruction of operation of existing (legacy) Wi-Fi networks by the introduction of MIMO OFDM. Using the MIMO technique is not in conflict with existing Wi-Fi PHY protocol, enabling both existing and next-generation Wi-Fi systems to coexist.

Exhibit 1010
Nokia v. Woodbury Wireless Inc.
Page 000007

[0004] One problem with exploiting several existing Wi-Fi channels in parallel is that backward compatibility traditionally requires that the use of multiple frequency channels only be allowed in a "pure" scenario, where the network consists only of next-generation Wi-Fi devices. In a "mixed" scenario, where the network includes both existing and next-generation Wi-Fi devices, only the use of single frequency channels is allowed, significantly reducing the potential throughput of next-generation devices in mixed networks. Specifically, existing Wi-Fi systems assume the use of 64 subcarriers (52 of which are used for data transmission) in 20 MHz channels, whereas next-generation devices can use 128 subcarriers (108 of which are used to transmit data) in 40 MHz channels. The next-generation devices are thus required to significantly reduce potential throughput for purposes of backward compatibility.

Exhibit 1010
Nokia v. Woodbury Wireless Inc.
Page 000008

BRIEF DESCRIPTION OF THE DRAWINGS

[0005] The following description includes discussion of various figures having illustrations given by way of example of implementations of embodiments of the invention. The drawings should be understood by way of example, and not by way of limitation.

[0006] Figure 1 is a block diagram of an embodiment of a MIMO-OFDM transmitter architecture.

[0007] Figure 2 is a block diagram of an embodiment of a MIMO-OFDM receiver architecture.

[0008] Figure 3 is a block diagram of an embodiment of a communication frame.

[0009] Figure 4 is a block diagram of an embodiment of an addition circuit and an example of an operation of the addition circuit.

[0010] Figures 5A-5C are block diagrams of embodiments of OFDM symbols with guard intervals.

[0011] Figures 6A-6B are block diagrams of embodiments of OFDM symbols with pilot subcarriers.

[0012] Figures 7A-7B are block diagrams of embodiments of OFDM symbols with guard bands.

Exhibit 1010
Nokia v. Woodbury Wireless Inc.
Page 000009

DETAILED DESCRIPTION

[0013] As used herein, references to one or more "embodiments" are to be understood as describing a particular feature, structure, or characteristic included in at least one implementation of the invention. Thus, phrases such as "in one embodiment" or "in an alternate embodiment" appearing herein describe various embodiments and implementations of the invention, and do not necessarily all refer to the same embodiment. However, they are also not necessarily mutually exclusive. Descriptions of certain details and implementations follow, including a description of the figures, which may depict some or all of the embodiments described below, as well as discussing other potential embodiments or implementations of the inventive concepts presented herein. An overview of embodiments of the invention is provided below, followed by a more detailed description with reference to the drawings.

[0014] An OFDM (orthogonal frequency division multiplexing) system provides enhanced operation over existing Wi-Fi (Wireless Fidelity) wireless channels while maintaining a certain level of compatibility with existing Wi-Fi (e.g., IEEE (Institute of Electrical and Electronics Engineers) Std. 802.11a, 1999 (the "802.11a standard"), IEEE Std. 802.11g, June 27, 2003 (the "802.11g standard"), which may collectively be referred to herein as "existing Wi-Fi") systems. An enhanced OFDM system as described herein provides enhanced operation over existing Wi-Fi and next-generation Wi-Fi systems (e.g., proposal IEEE P802.11n, May 2005 (the "next-generation Wi-Fi")). Because the techniques described herein can be implemented in a manner compatible with next-generation Wi-Fi, a system using the enhancements suggested herein may also be referred to as "next-generation Wi-Fi." One implementation of embodiments of the invention may include use as a part of or as an enhancement to the 802.11n proposal. Reference is made herein to 802.11a/g systems and 802.11n systems, which is to be understood as examples

Exhibit 1010
Nokia v. Woodbury Wireless Inc.
Page 000010

of system in which the techniques described herein may be used. Embodiments of the invention could apply to other multi-carrier communication systems. The standards and proposals described as examples herein may be considered to be wireless communication protocols, having definitions or descriptions or suggestions to set forth how components of the system should interact, and how the components may function. The descriptions herein may apply to other wireless communication protocols.

[0015] The frame starts with the portion of legacy (802.11a/g) frame necessary for legacy devices to detect the packet transmission and for both legacy and 802.11n devices to perform necessary acquisition and estimations such as frequency offset, timing, signal strength, etc.

[0016] Next-generation Wi-Fi systems assume the use of a total of 64 subcarriers (52 of which are used for data transmission) in 20 MHz channels, and a total of 128 subcarriers (108 of which are used to transmit data) in 40 MHz channels. Next-generation Wi-Fi systems further assume the use of 40 MHz channels in a "pure" scenario, where a network includes only of next-generation Wi-Fi devices, or devices compatible with the 802.11n standard. In a "mixed" scenario where a network includes both next-generation and existing Wi-Fi devices, existing OFDM systems assume that devices compatible with 802.11n operate in 20 MHz channels using 64 subcarriers, rather than the 40 MHz channels defined in the 802.11n proposal.

[0017] The lower channel widths (20 MHz) used for compatibility with existing Wi-Fi devices in mixed systems were thought to render next-generation Wi-Fi devices incapable of utilizing the higher subcarrier count (128), higher throughput mechanisms available when used in higher channel widths (e.g., 40 MHz). Modifications of the 802.11n standard allow the use of 128 subcarriers in 20 MHz channels. The subcarrier spacing can be reduced, and more subcarriers introduced to increase the length of a communication symbol. In one embodiment subcarrier

Exhibit 1010
Nokia v. Woodbury Wireless Inc.
Page 000011

spacing is reduced by half, and the number of subcarriers is doubled, to effectively double an OFDM symbol length. In one embodiment, an OFDM guard interval can be reduced in length to further improve spectrum use and increase throughput.

[0018] Figure 1 is a block diagram of an embodiment of a MIMO-OFDM transmitter architecture. System 100 provides an architecture in which an orthogonal frequency division multiplexed (OFDM) system as described herein can operate. With the exception of differences mentioned herein, the architecture of system 100 may be identical or similar to that described in IEEE P802.11n, section 11 "MIMO-OFDM HT PHY Specification." A forward error correction (FEC) encoder 102 can provide initial encoding of a signal to be transmitted. For convolutional code (CC) architectures, the mother code rate is 1/2. Encoded bits may optionally be punctured at puncture 104 to produce code rates of 2/3, 3/4, or 5/6. For low-density parity-check (LDPC) architectures, the different code rates are produced within the encoder and external puncturing may not be necessary. Following the encoding/puncturing of bits, the signal is forwarded to spatial stream parser 110 to separate bits of an output signal stream among multiple transmit paths, which could be for multiple separate channels over which the signal will be sent.

[0019] The separate portions of the output stream are processed through frequency interleavers 112 and 122. For each spatial stream, blocks of bits that map to a single OFDM symbol are interleaved by frequency interleavers 112 and 122. The interleaving may be referred to as "frequency interleaving" as bits are interleaved across subcarriers. In addition to frequency interleaving, frequency interleavers 112 and 122 may also interleave subcarrier QAM constellation points (for example, to provide increased robustness against channel errors. The number of subcarriers may be different than a standard number of subcarriers expected, or defined by a standard or proposal. For example, 128 subcarriers may be used in a scenario

Exhibit 1010
Nokia v. Woodbury Wireless Inc.
Page 000012

defined to use 64 subcarriers. Interleaving may be across all available subcarriers. The combination of spatial stream parser 110 and frequency interleaver 112 results in space-time interleaving.

[0020] The elements/components of Figure 1 can be considered to be coupled with or to each other as depicted in the figure. The coupling of components may include physical coupling, communicative coupling, and/or electrical coupling. Thus, coupling may refer to direct physical interconnection, as well as indirect interconnection.

[0021] From frequency interleavers 112 and 122, interleaved bits are forwarded to QAM (Quadrature Amplitude Modulation) mapping 114 and 124, respectively, to be mapped to QAM constellation points. The mapping may be BPSK (Binary Phase-Shift Keying), QPSK (Quadrature Phase-Shift Keying), 16 QAM, 64 QAM or 256 QAM.

[0022] Note that multiple frequency interleavers and QAM mappers are possible in system 100. Two are shown, but the number could be greater. Thus, system 100 supports multiple-input multiple-output (MIMO). MIMO encoder 130 provides a first operation in an antenna map transformation. Multiple inputs can come into MIMO encoder 130, which sends streams out multiple paths to multiple antennas. The two paths may have a 128 point Inverse Discrete Fourier Transform (IDFT) 132, 142, an insert guard interval (GI) 134, 144, a digital to analog converter (DAC) 136, 146, and an analog and radio frequency (RF) 20 MHz converter 138, 148. In one embodiment the IDFT includes a number of points other than 128 (e.g., 256) that may be a multiple of 128 (the number of subcarriers). These respective paths provide information to transmit out antennas 152 and 154.

[0023] Transmit antennas 152-154 may be the same antennas used for receiving incoming signals. Transmit antennas 152-154 may be any type of antenna (e.g., dipole, dish,

Exhibit 1010
Nokia v. Woodbury Wireless Inc.
Page 000013

omnidirectional, etc.), and may be an array of antenna elements. After processing by MIMO encoder 130, antenna streams can be transformed from the frequency domain to the time domain by 128 point IFFTs 132 and 142. The increase in transform points allows for higher throughput in system 100. The signal can be further formed by the addition of a guard interval by insert GI 134 and 144. Digital conversion to analog signals may be performed by DACs 136 and 146, and the analog signals are then processed by analog and RF processors 138 and 148 to generate signals of legacy spectrum width of 20 MHz to be applied to transmit antennas 152-154.

[0024] Figure 2 is a block diagram of an embodiment of a MIMO-OFDM receiver architecture. In one embodiment, the operation of the elements of Figure 2 is the reverse of the operations of Figure 1. A signal is received at one or more antennas, and processed by analog and RF processors 202 and 212 operating in legacy spectrum width of 20 MHz. The received streams are converted with analog to digital converters (ADCs) 204 and 214 to produce a digital signal that includes discrete points representing the received signal. Remove GI blocks 206 and 216 represent the removal of guard intervals or other signal formatting to be removed prior to processing the received signals.

[0025] DFTs 208 and 218 (for example, a Fast Fourier Transform (FFT)) transform the received signals from the time domain to the frequency domain to extract information relative to processing the received signals. DFTs 208 and 218 can be 128 point DFTs, even though the operation occurs in a 20 MHz channel. The extension of the symbols of the received streams allows better spectrum use than traditional 64 point DFTs in 20 MHz channels. 128 point DFTs 208 and 218 provide the transformed signal streams to MIMO decoder 220 to de-map the signals from the antennas and allow QAM de-mapping blocks 222 and 232 to determine symbols from

Exhibit 1010
Nokia v. Woodbury Wireless Inc.
Page 000014

the stream. Frequency de-interleavers 224 and 234 to extract the individual subcarriers of the streams, which are sent to spatial stream combiner 240 for construction of spatial streams.

[0026] If puncturing is used in system 200, de-puncture 242 may be applied to produce a signal with a mother code rate for decoding by FEC decoder 244. From FEC decoder 244, the signal may be forwarded to upper layers of software for processing or other operation on the received signals. As with system 100 of Figure 1, system 200 of Figure 2 may function the same or similar to a system defined in the IEEE P802.11n proposal, and operating with a 128-point DFT (Figure 2) or IDFT (Figure 1) in 20 MHz.

[0027] Figure 3 is a block diagram of an embodiment of a communication frame. Frame 300 represents one example of a frame that can be used in a system with extended symbol length according to any embodiment described herein. Frame 300 can be a PLCP (PHY (Physical) Layer Convergence Protocol) Protocol Data Unit (PPDU). Frame 300 includes a legacy portion to provide compatibility with legacy systems, or systems that operate at a lower bandwidth channel and a lower throughput (e.g., 802.11a/g systems). L-STF (Legacy Short Training Field) 302, L-LTF (Legacy Long Training Field) 304, and L-SIG (Legacy SIGnal field) 306 provide a frame portion necessary to legacy devices to detect packet transmission. These legacy fields also enable both legacy and other devices to perform acquisition and estimation operations (e.g., frequency offset, timing, signal strength, etc.), for participating in communication in a system.

[0028] 128-subcarriers HT (High Throughput) frame portion 310 provides a high-throughput portion with 128 subcarriers in 20 MHz. HT frame portion 310 can include HT-STF 312 and HT-LTFs 314-316 for training to enable a receiving device to obtain the signal. HT frame portion 310 also includes HT-DATA fields 322-324, which represent the information of frame 300, with 128 subcarriers. HT-SIG (HT SIGnal field) 308, enables an HT-compatible device to

Exhibit 1010
Nokia v. Woodbury Wireless Inc.
Page 000015

know that an HT signal is being transmitted and can indicate that a 128-subcarrier symbol is being transmitted. HT-SIG 308 can contain a "long symbol" bit indicating 128 subcarriers in 20 MHz. In the IEEE P802.11n proposal, no such bit exists in the HT-SIG field of the proposal, but one could be added by shortening the CRC (Cyclic Redundancy Check) field of the HT-SIG field to obtain an extra bit for use as a "long symbol" indicator. Other fields within the HT-SIG field could be modified to obtain an extra bit.

[0029] The following table represents one example embodiment of a possible system implementation according to the 128-subcarrier signal in 20 MHz as described herein:

	128 subcarriers Proposal
Data Subcarriers	108
Pilot Subcarriers	4
Null Subcarriers	3
Max FEC Rate	5/6
Peak Rate	150 Mbps

[0030] Figure 4 is a block diagram of an embodiment of an addition circuit and an example of an operation of the addition circuit. Circuit 400 represents an additional circuit added to a system that could be used in devices that are enabled to operate with 2 different channel bandwidths, for example, 20 MHz and 40 MHz. Received signal 412 could be either a 20 MHz signal or a 40 MHz signal according to one system implementation. When mixed systems are employed and a system including circuit 400 operates in 20 MHz using a 128-point DFT, circuit 400 is activated. Received signal 412 is mixed in multiplier 416 with frequency shift signal 414, which may be an offset of 10 MHz in the system described. Other frequency shifts are possible.

[0031] If the received signal is 20 MHz, the signal is processed with 20 MHz filter 418 and down-sampler 420. If the received signal is 40 MHz (e.g., a pure system), 20 MHz filter 418 and down-sampler 420 are bypassed. Below circuit 400, the processing of a received signal is

Exhibit 1010
Nokia v. Woodbury Wireless Inc.
Page 000016

depicted visually. PPDUs 432 and 434 represent 20 MHz signals that could be received. The PPDUs are frequency shifted and centered on a reference frequency (e.g., 0 MHz). The resulting shifted PPDU is shown as PPDU 442. PPDU 442 can be filtered by 20 MHz filter 450 to remove unwanted or unintentional signal elements.

[0032] Figures 5A-5C are block diagrams of embodiments of OFDM symbols with guard intervals. With reference to Figure 5A, a prior art embodiment of an OFDM symbol is shown with guard intervals, or symbol-spacing guard intervals. The OFDM symbol is a 64-point symbol with full guard intervals in 20 MHz, as would be used by next-generation Wi-Fi devices in mixed systems.

[0033] Figure 5B represents an OFDM symbol that is extended to include twice as many points, thus providing a 128-point symbol. Even maintaining the guard interval duration as the prior art in Figure 5A, doubling the number of subcarriers can provide an 11% throughput increase. In an embodiment according to Figure 5C, a 128-point symbol is combined with a half-length OFDM guard interval, which can improve throughput by approximately 17.6%.

[0034] Figures 6A-6B are block diagrams of embodiments of OFDM symbols with pilot subcarriers. Figure 6A represents a prior art representation of a 64-point OFDM symbol with full pilot subcarrier overhead. Figure 6B provides an increased 128-point OFDM symbol with reduced pilot subcarrier overhead. Reducing the pilot subcarrier overhead allows increased use of available spectrum for data transmission. When using 128 subcarriers instead of 64 subcarriers, the pilot subcarrier overhead can be reduced because the spectrum occupied by each subcarrier, and in particular by the pilot subcarriers, reduces proportionally to the subcarrier number increase, provided that the number of pilot subcarriers is the same. Thus, the pilot subcarrier spectrum can be reduced and consequently pilot subcarrier overhead reduced.

Exhibit 1010
Nokia v. Woodbury Wireless Inc.
Page 000017

Combining this decrease with a decrease of guard interval overhead provides increased spectrum for data throughput.

[0035] Figures 7A-7B are block diagrams of embodiments of OFDM symbols with guard bands. Figure 7A represents a prior art embodiment of a 64-point symbol with full guard bands, or frequency-spacing/separating guard bands. Note that guard intervals separate one symbol from the next (temporal separation). A guard band provides a frequency buffer zone to reduce the effects of out-of-band emission (frequency separation of channels). As shown with reference to Figure 7B, using 128 subcarriers instead of 64 subcarriers allows a system to use part of the spectral resources occupied in traditional systems by the guard bands. When using 128 subcarriers, the guard band spectrum can be reduced proportionally to the increase in the subcarrier number to provide the same level of protection against the effects of out-of-band emission. Therefore the required guard band spectrum part reduces proportionally to the increase of the subcarrier number, and provides additional spectrum resources for data transmission.

[0036] In one embodiment 108 subcarriers of the 128 subcarriers are used for data transmission, which is more than twice the 48 data subcarriers of the 64 total subcarriers of existing Wi-Fi systems. Because the overhead of both pilot subcarriers and the guard frequency bands are reduced, the increase to 108 data subcarriers can be achieved, which can improve throughput by approximately 12.5%. With the use of 128 subcarriers, 108 of which are data subcarriers, the reduction in guard intervals, guard bands, and pilot subcarrier overhead, a system as described herein can provide approximately 32% throughput improvement over traditional next-generation Wi-Fi.

Exhibit 1010
Nokia v. Woodbury Wireless Inc.
Page 000018

[0037] Techniques described herein can be performed on components that may include hardware, software, and/or a combination of these. Software to instruct a machine to implement the techniques herein, or software to use to manufacture a device to perform the techniques described herein may be provided via an article of manufacture by a machine/electronic device/hardware. An article of manufacture may include a machine accessible/readable medium having content to provide instructions, data, etc. The content may result in an electronic device performing various operations or executions described. A machine accessible medium includes any mechanism that provides (i.e., stores and/or transmits) information/content/instructions in a form accessible by a machine (e.g., computing device, electronic device, electronic system/subsystem, etc.). For example, a machine accessible medium includes recordable/non-recordable media (e.g., read only memory (ROM), random access memory (RAM), magnetic disk storage media, optical storage media, flash memory devices, etc.), as well as electrical, optical, acoustical or other forms of propagated signals (e.g., carrier waves, infrared signals, digital signals, etc.), etc. The machine accessible medium may further include an electronic device having code loaded on a storage that may be executed when the electronic device is in operation. Thus, delivering an electronic device with such code may be understood as providing the article of manufacture with such content described above. Furthermore, storing code on a database or other memory location and offering the code for download over a communication medium via a propagated signal may be understood as providing the article of manufacture with such content described above.

[0038] Besides what is described herein, various modifications may be made to the disclosed embodiments and implementations of the invention without departing from their scope. Therefore, the illustrations and examples herein should be construed in an illustrative, and not a

Exhibit 1010
Nokia v. Woodbury Wireless Inc.
Page 000019

restrictive sense. The scope of the invention should be measured solely by reference to the claims that follow.

Exhibit 1010
Nokia v. Woodbury Wireless Inc.
Page 000020

CLAIMS

What is claimed is:

1. In a multi-carrier communication system having a fixed-bandwidth channel, a method comprising:

reducing a spacing of subcarriers on the fixed-bandwidth channel;

increasing a number of subcarriers to increase a length of a symbol on the fixed-bandwidth channel;

performing a discrete Fourier transform with an increased number of discrete points on the symbol with the increased number of subcarriers.

2. The method of claim 1, wherein reducing the spacing of the subcarriers on the fixed-bandwidth channel comprises reducing the subcarrier spacing of the subcarriers by half.

3. The method of claim 2, wherein reducing the subcarrier spacing by half on the fixed bandwidth channel comprises reducing the subcarrier spacing by half on a 20 MHz channel.

4. The method of claim 2, wherein reducing the subcarrier spacing by half on the fixed bandwidth channel comprises reducing the subcarrier spacing in a high-throughput (HT) wireless local area network (WLAN) system.

5. The method of claim 2, wherein increasing the number of subcarriers comprises increasing the number of subcarriers from 64 to 128.

6. The method of claim 5, wherein increasing the number of subcarriers from 64 to 128 further comprises increasing the number of data subcarriers by more than double.

7. The method of claim 1, wherein performing the discrete Fourier transform with the increased number of discrete points comprises performing a 128-point IDFT (Inverse Discrete Fourier Transform) on a transmit signal.

Exhibit 1010
Nokia v. Woodbury Wireless Inc.
Page 000021

8. The method of claim 1, further comprising reducing a temporal symbol-spacing guard interval.

9. The method of claim 1, further comprising reducing a frequency channel-spacing guard band on the fixed-bandwidth channel.

10. The method of claim 1, further comprising reducing an amount of spectrum occupied by a pilot subcarrier.

11. An article of manufacture comprising a machine-accessible medium having content stored thereon to provide instructions to cause a machine to perform operations including:

generating a symbol for transmission on a fixed-bandwidth channel of a multi-carrier communication system, the symbol having a format compatible with a wireless communication protocol, and having an increased number of subcarriers with respect to a number specified in the wireless communication protocol;

performing a discrete Fourier transform with an increased number of discrete points with respect to a number specified in the wireless communication protocol; and

transmitting the symbol to a remote receiver.

12. The article of manufacture according to claim 11, wherein the wireless communication protocol is compatible with a high-throughput (HT) wireless local area network (WLAN) protocol, and the increased number of subcarriers comprises 128 in a 20 MHz.

13. The article of manufacture according to claim 11, further comprising instructions for:

reducing a temporal symbol-spacing guard interval; and

reducing a frequency channel-spacing guard band on the fixed-bandwidth channel.

Exhibit 1010
Nokia v. Woodbury Wireless Inc.
Page 000022

14. An apparatus for transmitting a signal, comprising:

an encoder to map a signal to a number of subcarriers to represent the signal in discrete points, the number of subcarriers being double a number of subcarriers defined for the signal in a wireless communication protocol with which the signal is compatible;

an Inverse Discrete Fourier Transform (IDFT) component coupled with the encoder to transform the discrete-point signal from a frequency domain representation to a time domain representation; and

a digital to analog converter (DAC) coupled with the IDFT to convert the time domain signal representation into an analog waveform to transmit to a remote receiver.

15. The apparatus of claim 14, the number of subcarriers comprising 128 subcarriers in a 20 MHz channel that is compatible with a high-throughput (HT) wireless local area network (WLAN) protocol.

16. The apparatus of claim 14, the encoder further to map the number of subcarriers to a signal representation having a reduced temporal symbol-spacing guard interval.

17. The apparatus of claim 14, the encoder further to map the number of subcarriers to a signal representation having a reduced frequency channel-spacing guard band.

18. A system comprising:

a transmitter having:

an encoder to map a signal to a number of subcarriers to represent the signal in discrete points;

an Inverse Discrete Fourier Transform (IDFT) component coupled with the encoder to transform the discrete-point signal from a frequency domain representation to a time domain representation; and

Exhibit 1010
Nokia v. Woodbury Wireless Inc.
Page 000023

a digital to analog converter (DAC) coupled with the IDFT to convert the time domain signal representation into an analog waveform to transmit to a remote receiver; and

a dipole antenna coupled to the transmitter to transmit the analog waveform.

19. The system of claim 18, the number of subcarriers comprising 128 subcarriers in a 20 MHz channel that is compatible with a high-throughput (HT) wireless local area network (WLAN) protocol.

20. The system of claim 18, the encoder further to map the number of subcarriers to a signal representation having a reduced temporal symbol-spacing guard interval and a reduced frequency channel-spacing guard band.

Exhibit 1010
Nokia v. Woodbury Wireless Inc.
Page 000024

ABSTRACT

Methods and apparatus provide increased symbol length with more subcarriers in a fixed-bandwidth system. The subcarriers spacing may be reduced to provide increased symbol length and enable higher throughput. In one implementation, a system compatible with the IEEE P802.11n proposal can use 128 subcarriers in 20 MHz operation to provide increased throughput in lower-bandwidth channel operation.

Exhibit 1010
Nokia v. Woodbury Wireless Inc.
Page 000025

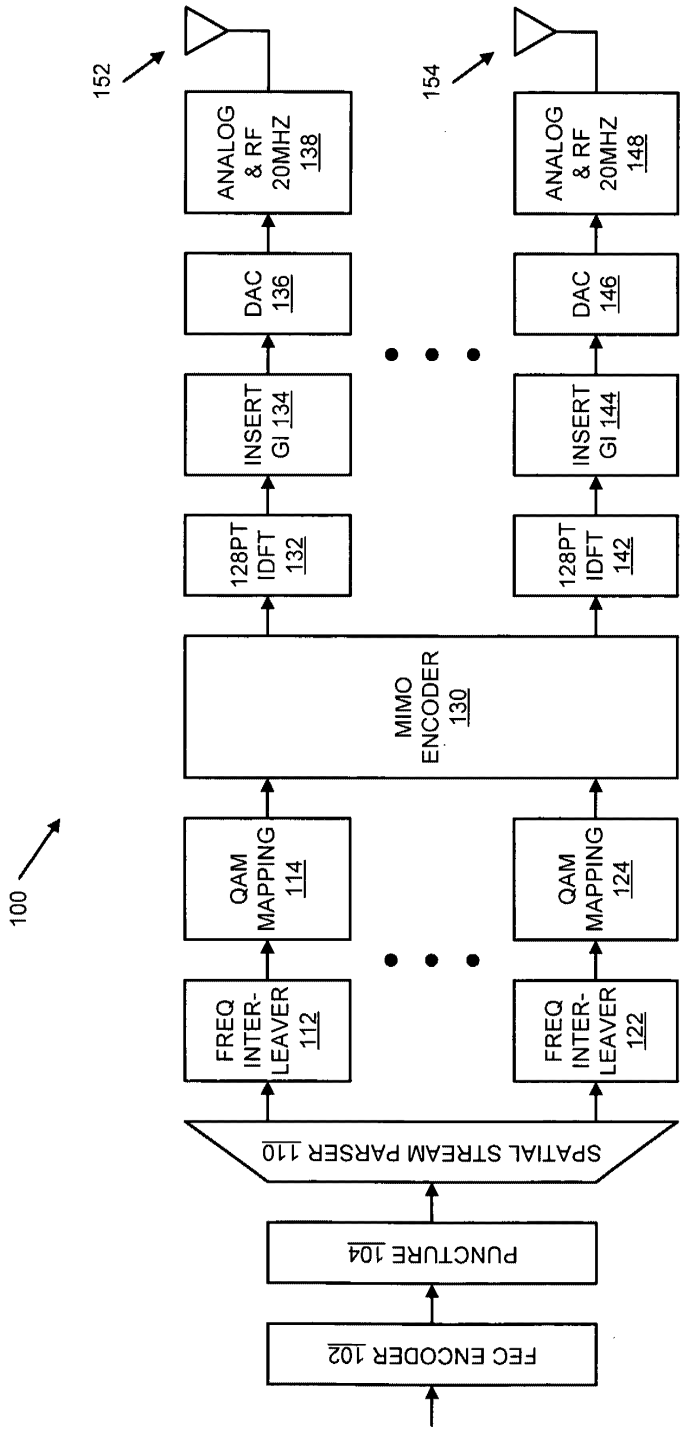
100
FEC ENCODER 102
PUNCTURE 104
SPATIAL STREAM PARSER 110
FREQ INTER-LEAVER 112
QAM MAPPING 114
FREQ INTER-LEAVER 122
QAM MAPPING 124
MIMO ENCODER 130
128PT IDFT 132
128PT IDFT 142
INSERT GI 134
INSERT GI 144
DAC 136
DAC 146
ANALOG & RF 20MHZ 138
ANALOG & RF 20MHZ 148
152
154

FIG. 1

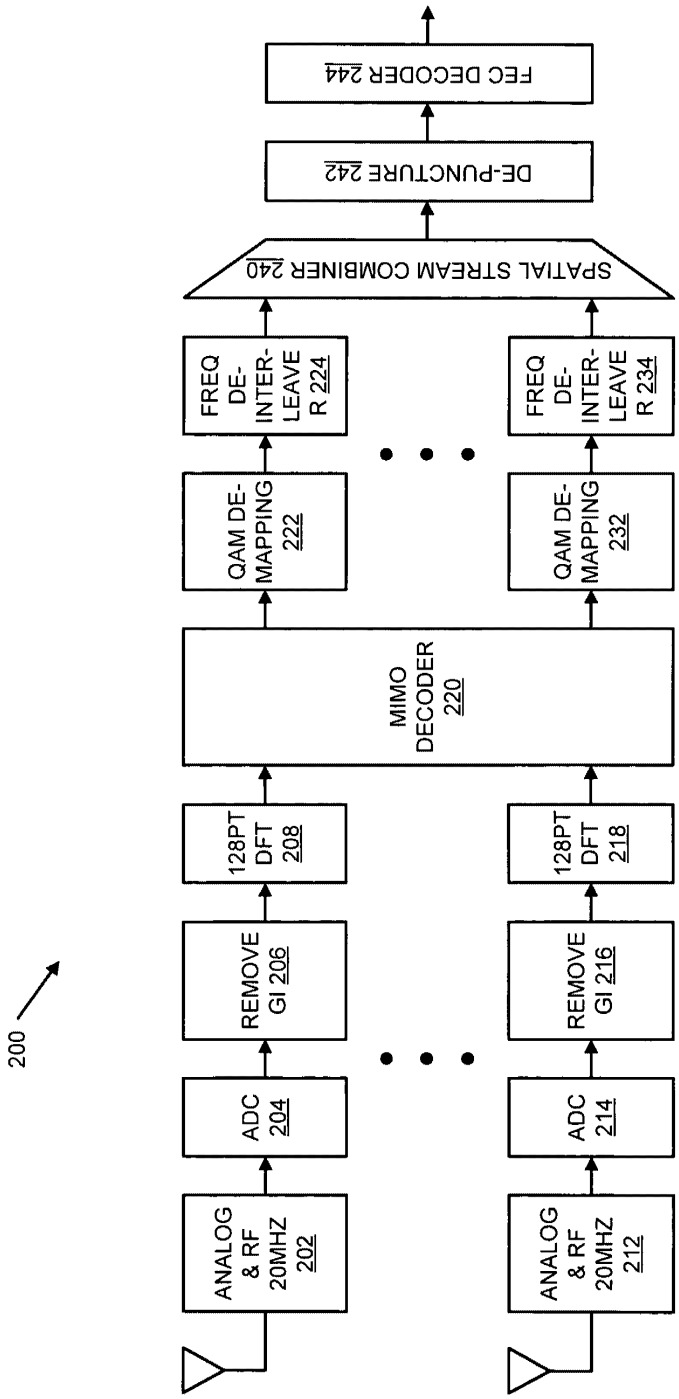
200
ANALOG & RF 20MHZ 202
ADC 204
REMOVE GI 206
128PT DFT 208
ANALOG & RF 20MHZ 212
ADC 214
REMOVE GI 216
128PT DFT 218
MIMO DECODER 220
QAM DE-MAPPING 222
QAM DE-MAPPING 232
FREQ DE-INTER-LEAVE R 224
FREQ DE-INTER-LEAVE R 234
SPATIAL STREAM COMBINER 240
DE-PUNCTURE 242
FEC DECODER 244

FIG. 2

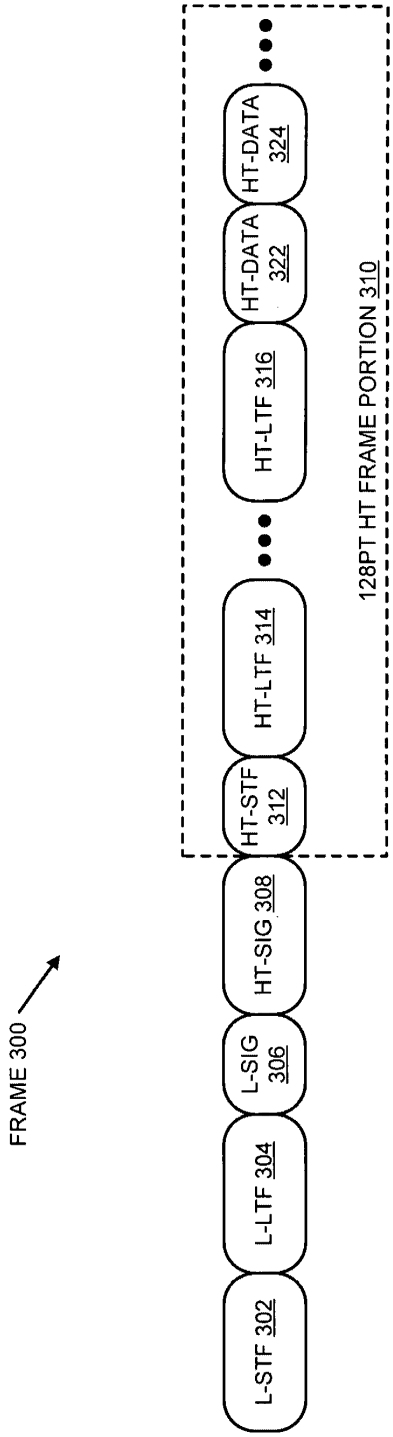
FRAME 300
L-STF 302
L-LTF 304
L-SIG 306
HT-SIG 308
HT-STF 312
HT-LTF 314
HT-LTF 316
HT-DATA 322
HT-DATA 324
128PT HT FRAME PORTION 310

FIG. 3

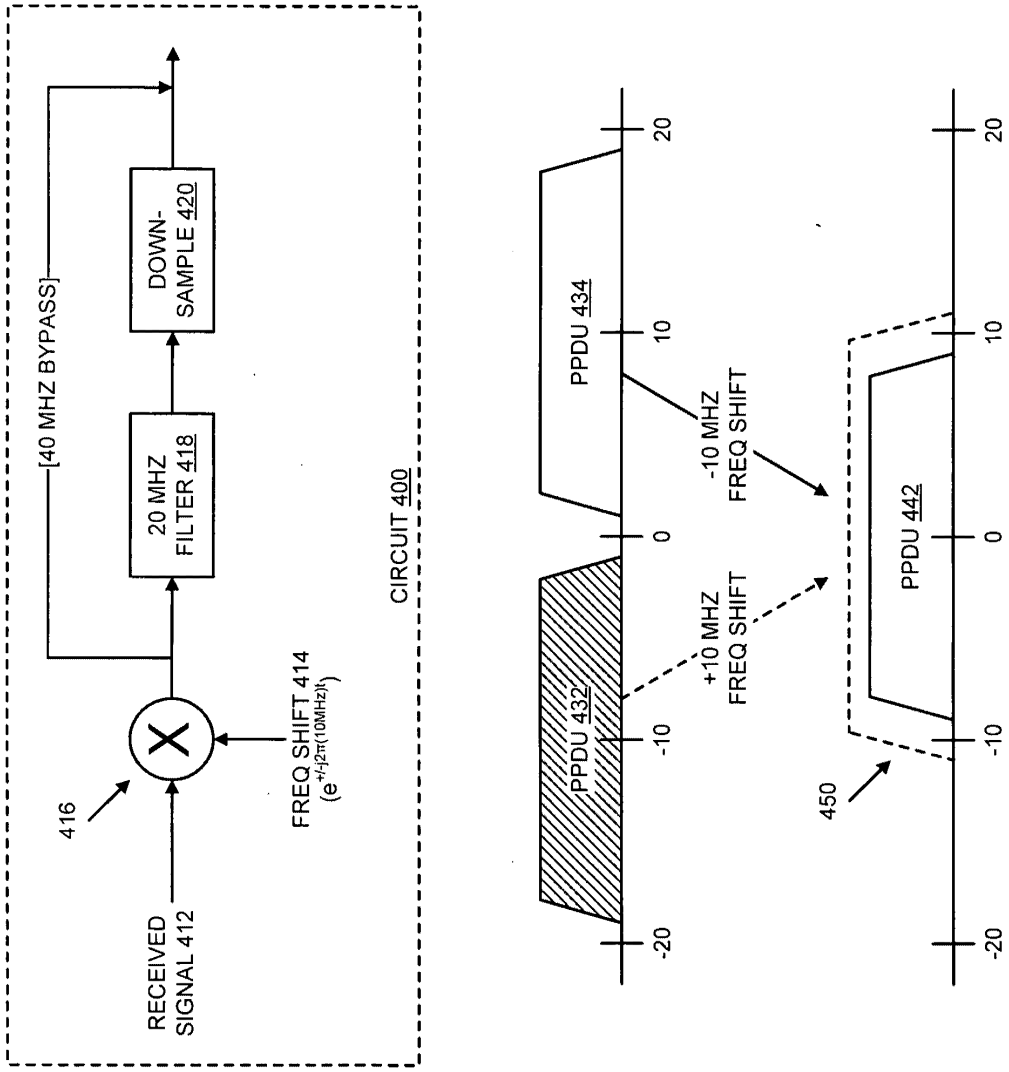
RECEIVED SIGNAL 412
416
FREQ SHIFT 414
$(e^{+/-j2\pi(10MHz)t})$
20 MHZ FILTER 418
DOWN-SAMPLE 420
[40 MHZ BYPASS]
CIRCUIT 400
PPDU 432
PPDU 434
+10 MHZ FREQ SHIFT
-10 MHZ FREQ SHIFT
PPDU 442
450
-20
-10
0
10
20

FIG. 4

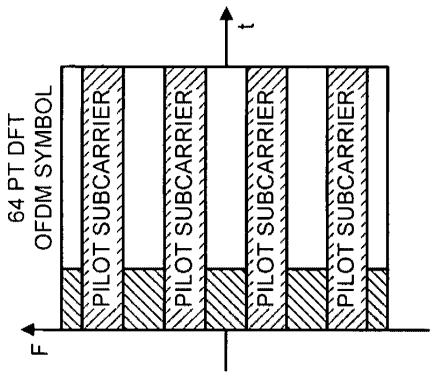

FIG. 6A (PRIOR ART)

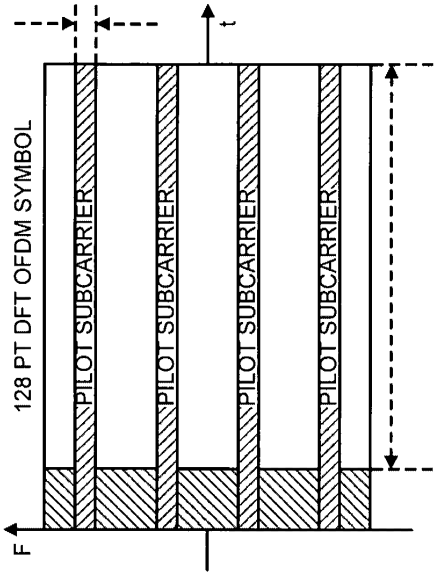

FIG. 6B

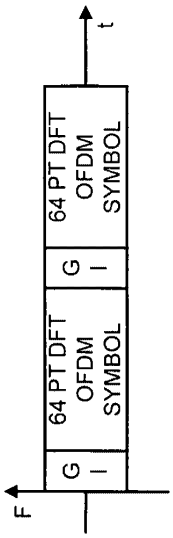

FIG. 5A (PRIOR ART)

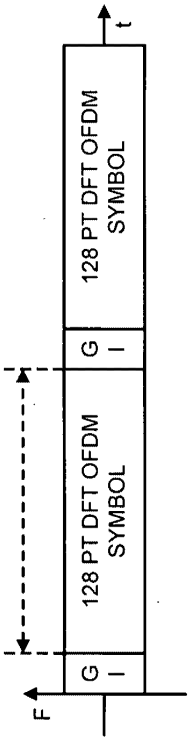

FIG. 5B

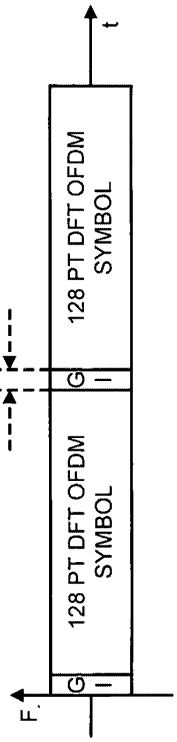

FIG. 5C

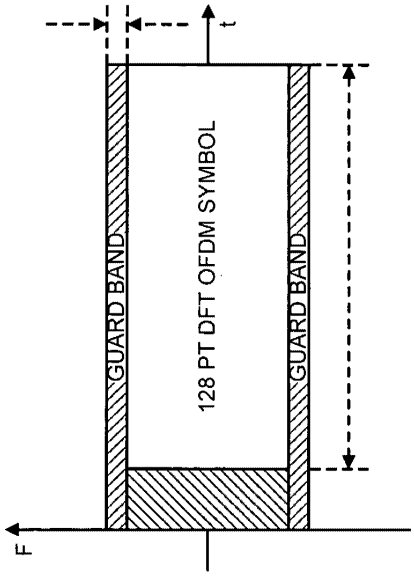

FIG. 7B

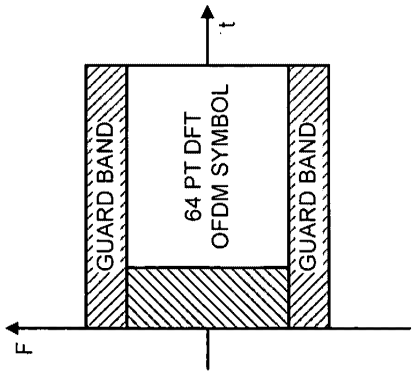

FIG. 7A (PRIOR ART)