US010347682B2

(12) **United States Patent**
Haddad et al.

(10) **Patent No.: US 10,347,682 B2**
(45) **Date of Patent: Jul. 9, 2019**

(54) **SHALLOW TRENCH TEXTURED REGIONS AND ASSOCIATED METHODS**

(71) Applicant: **SiOnyx, LLC**, Beverly, MA (US)

(72) Inventors: **Homayoon Haddad**, Beaverton, OR (US); **Jutao Jiang**, Tigard, OR (US)

(73) Assignee: **Sionyx, LLC**, Beverly, MA (US)

(*) Notice: Subject to any disclaimer, the term of this patent is extended or adjusted under 35 U.S.C. 154(b) by 0 days.

(21) Appl. No.: **15/614,256**

(22) Filed: **Jun. 5, 2017**

(65) **Prior Publication Data**

US 2017/0271394 A1 Sep. 21, 2017

Related U.S. Application Data

(63) Continuation of application No. 14/884,181, filed on Oct. 15, 2015, now Pat. No. 9,673,250, which is a (Continued)

(51) **Int. Cl.**
H01L 31/0232 (2014.01)
H01L 31/028 (2006.01)
(Continued)

(52) **U.S. Cl.**
CPC ***H01L 27/14643*** (2013.01); ***H01L 27/1463*** (2013.01); ***H01L 27/1464*** (2013.01); ***H01L 27/14625*** (2013.01); ***H01L 27/14629*** (2013.01); ***H01L 27/14632*** (2013.01); ***H01L 27/14689*** (2013.01); ***H01L 31/028*** (2013.01); ***H01L 31/02327*** (2013.01); ***H01L 31/182*** (2013.01)

(58) **Field of Classification Search**
CPC H01L 31/02363; H01L 31/0236; H01L 31/02327; H01L 31/028; H01L 27/14629; H01L 27/14627; H01L 27/14643; H01L 27/1463
See application file for complete search history.

(56) **References Cited**

U.S. PATENT DOCUMENTS

3,487,223 A 12/1969 St. John
3,922,571 A 11/1975 Smith
(Continued)

FOREIGN PATENT DOCUMENTS

AU 3666484 6/1985
CN 1507075 6/2004
(Continued)

OTHER PUBLICATIONS

Aberle, Progress with polycrystalline silicon thin-film solar cells on glass at UNSW. Journal of Crystal Growth 287,386-390 (2006).
(Continued)

Primary Examiner — Caridad Everhart
(74) *Attorney, Agent, or Firm* — Pepper Hamilton LLP

(57) **ABSTRACT**

Photosensitive devices and associated methods are provided. In one aspect, for example, a photosensitive imager device can include a semiconductor layer having multiple doped regions forming a least one junction, a textured region coupled to the semiconductor layer and positioned to interact with electromagnetic radiation. The textured region can be formed from a series of shallow trench isolation features.

44 Claims, 3 Drawing Sheets

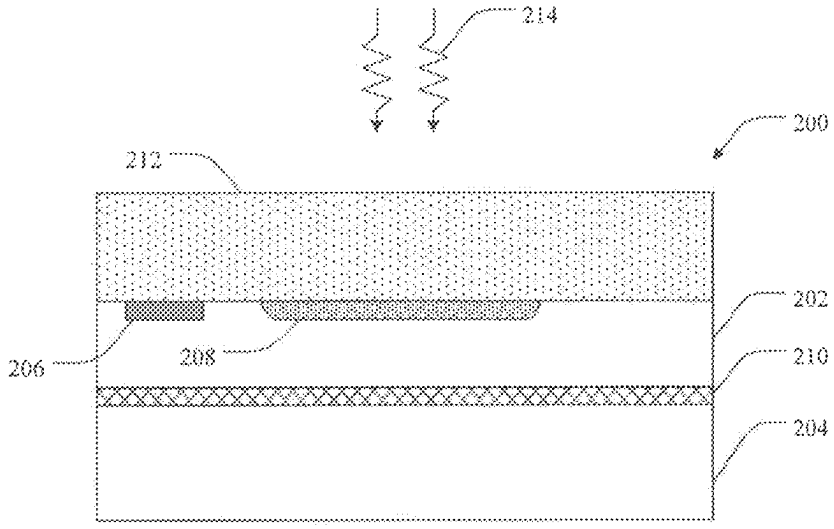

Related U.S. Application Data

continuation of application No. 14/084,392, filed on Nov. 19, 2013, now Pat. No. 9,209,345.

(60) Provisional application No. 61/841,326, filed on Jun. 29, 2013.

(51) **Int. Cl.**
H01L 27/146 (2006.01)
H01L 31/18 (2006.01)

(56) **References Cited**

U.S. PATENT DOCUMENTS

3,973,994 A 8/1976 Redfield
3,994,012 A 11/1976 Warner, Jr.
4,017,887 A 4/1977 Davies et al.
4,105,955 A 8/1978 Hayashi
4,149,174 A 4/1979 Shannon
4,176,365 A 11/1979 Kroger
4,181,538 A 1/1980 Narayan et al.
4,201,450 A 5/1980 Trapani
4,242,149 A 12/1980 King et al.
4,253,882 A 3/1981 Dalal
4,277,793 A 7/1981 Webb
4,322,571 A 3/1982 Stanbery
4,343,832 A 8/1982 Smith
4,346,164 A 8/1982 Tabarelli et al.
4,419,533 A 12/1983 Czubatyj et al.
4,452,826 A 6/1984 Shields et al.
4,493,942 A 1/1985 Sheng et al.
4,514,582 A 4/1985 Tiedje et al.
4,536,608 A 8/1985 Sheng et al.
4,546,945 A 10/1985 Nessfield
4,568,960 A 2/1986 Petroff et al.
4,593,303 A 6/1986 Dyck et al.
4,593,313 A 6/1986 Nagasaki
4,617,593 A 10/1986 Dudley
4,630,082 A 12/1986 Sakai
4,648,936 A 3/1987 Ashby et al.
4,663,188 A 5/1987 Kane
4,672,206 A 6/1987 Suzuki
4,673,770 A 6/1987 Mandelkorn
4,679,068 A 7/1987 Lillquist et al.
4,703,996 A 11/1987 Glass et al.
4,723,086 A 2/1988 Leibovich et al.
4,751,571 A 6/1988 Lillquist
4,773,944 A 9/1988 Nath et al.
4,775,425 A 10/1988 Guha et al.
4,777,490 A 10/1988 Sharma et al.
4,829,013 A 5/1989 Yamazaki
4,838,952 A 6/1989 Dill et al.
4,883,962 A 11/1989 Elliot
4,886,958 A 12/1989 Merryman
4,887,255 A 12/1989 Handa et al.
4,894,526 A 1/1990 Bethea et al.
4,910,568 A 3/1990 Taki et al.
4,910,588 A 3/1990 Kinoshita et al.
4,964,134 A 10/1990 Westbrook et al.
4,965,784 A 10/1990 Land et al.
4,968,372 A 11/1990 Maass
4,999,308 A 3/1991 Nishiura et al.
5,021,100 A 6/1991 Ishihara et al.
5,021,854 A 6/1991 Huth
5,080,725 A 1/1992 Green et al.
5,081,049 A 1/1992 Green et al.
5,089,437 A 2/1992 Shima et al.
5,100,478 A * 3/1992 Kawabata H01L 31/061 136/249
5,101,260 A 3/1992 Nath
5,114,876 A 5/1992 Weiner
5,127,964 A 7/1992 Hamakawa et al.
5,164,324 A 11/1992 Russell et al.
5,182,231 A 1/1993 Hongo et al.
5,208,822 A 5/1993 Haus et al.
5,223,043 A 6/1993 Olson et al.
5,234,790 A 8/1993 Lang et al.
5,236,863 A * 8/1993 Iranmanesh H01L 21/76294 148/DIG. 50
5,244,817 A 9/1993 Hawkins et al.
5,296,045 A 3/1994 Banerjee et al.
5,309,275 A 5/1994 Nishimura et al.
5,322,988 A 6/1994 Russell et al.
5,346,850 A 9/1994 Kaschmitter et al.
5,351,446 A 10/1994 Langsdorf
5,370,747 A * 12/1994 Noguchi H01L 31/0236 136/256
5,373,182 A 12/1994 Norton
5,381,431 A 1/1995 Zayhowski
5,383,217 A 1/1995 Uemura
5,390,201 A 2/1995 Tomono et al.
5,410,168 A 4/1995 Hisa
5,413,100 A 5/1995 Barthelemy et al.
5,449,626 A 9/1995 Hezel
5,454,347 A 10/1995 Shibata et al.
5,502,329 A 3/1996 Pezzani
5,507,881 A 4/1996 Sichanugrist et al.
5,523,570 A 6/1996 Hairston
5,559,361 A 9/1996 Pezzani
5,569,615 A 10/1996 Yamazaki et al.
5,569,624 A 10/1996 Weiner
5,578,858 A 11/1996 Mueller et al.
5,580,615 A 12/1996 Itoh et al.
5,583,704 A 12/1996 Fujii
5,589,008 A 12/1996 Kepper
5,589,704 A 12/1996 Levine
5,597,621 A 1/1997 Hummel et al.
5,600,130 A 2/1997 VanZeghbroeck
5,626,687 A 5/1997 Campbell
5,627,081 A 5/1997 Tsuo et al.
5,635,089 A 6/1997 Singh et al.
5,640,013 A 6/1997 Ishikawa et al.
5,641,362 A 6/1997 Meier
5,641,969 A 6/1997 Cooke et al.
5,705,413 A 1/1998 Harkin et al.
5,705,828 A 1/1998 Noguchi et al.
5,708,486 A 1/1998 Miyawaki et al.
5,710,442 A 1/1998 Watanabe et al.
5,714,404 A 2/1998 Mititsky et al.
5,727,096 A 3/1998 Ghirardi et al.
5,731,213 A 3/1998 Ono
5,751,005 A 5/1998 Wyles et al.
5,758,644 A 6/1998 Diab et al.
5,766,127 A 6/1998 Pologe et al.
5,766,964 A 6/1998 Rohatgi et al.
5,773,820 A 6/1998 Osajda et al.
5,779,631 A 7/1998 Chance
5,781,392 A 7/1998 Clark
5,792,280 A 8/1998 Ruby et al.
5,802,091 A 8/1998 Chakrabarti et al.
5,808,350 A 9/1998 Jack et al.
5,859,446 A 1/1999 Nagasu et al.
5,861,639 A 1/1999 Bernier
5,871,826 A 2/1999 Mei
5,898,672 A 4/1999 Ginzboorg
5,918,140 A 6/1999 Wickboldt et al.
5,923,071 A 7/1999 Saito
5,935,320 A 8/1999 Graef et al.
5,942,789 A 8/1999 Morikawa
5,943,584 A 8/1999 Shim et al.
5,963,790 A 10/1999 Matsuno et al.
5,977,515 A 11/1999 Uraki et al.
5,977,603 A 11/1999 Ishikawa
5,995,606 A 11/1999 Civanlar et al.
6,019,796 A 2/2000 Mei
6,048,588 A 4/2000 Engelsberg
6,049,058 A 4/2000 Dulaney et al.
6,071,796 A 6/2000 Voutsas
6,072,117 A 6/2000 Matsuyama et al.
6,080,988 A 6/2000 Ishizuya et al.
6,082,858 A 7/2000 Grace et al.
6,097,031 A 8/2000 Cole
6,106,689 A 8/2000 Matsuyama
6,107,618 A 8/2000 Fossum et al.
6,111,300 A 8/2000 Cao et al.

(56) **References Cited**

U.S. PATENT DOCUMENTS

6,117,499 A 9/2000 Wong et al.
6,121,130 A 9/2000 Chua et al.
6,128,379 A 10/2000 Smyk
6,131,511 A 10/2000 Wachi et al.
6,131,512 A 10/2000 Verlinden et al.
6,147,297 A 11/2000 Wettling et al.
6,160,833 A 12/2000 Floyd et al.
6,168,965 B1 1/2001 Malinovich et al.
6,194,722 B1 2/2001 Fiorini et al.
6,204,506 B1 3/2001 Akahori et al.
6,229,192 B1 5/2001 Gu
6,242,291 B1 6/2001 Kusumoto et al.
6,252,256 B1 6/2001 Ugge et al.
6,272,768 B1 8/2001 Danese
6,290,713 B1 9/2001 Russell
6,291,302 B1 9/2001 Yu
6,313,901 B1 11/2001 Cacharelis
6,320,296 B1 11/2001 Fujii et al.
6,327,022 B1 12/2001 Nishi
6,331,445 B1 12/2001 Janz et al.
6,331,885 B1 12/2001 Nishi
6,333,485 B1 12/2001 Haight et al.
6,340,281 B1 1/2002 Haraguchi
6,372,536 B1 4/2002 Fischer et al.
6,372,591 B1 4/2002 Mineji et al.
6,372,611 B1 4/2002 Horikawa
6,379,979 B1 4/2002 Connolly
6,413,135 B1 * 7/2002 Kim H01J 9/185 156/273.7
6,420,706 B1 7/2002 Lurie et al.
6,429,036 B1 8/2002 Nixon et al.
6,429,037 B1 8/2002 Wenham et al.
6,457,478 B1 10/2002 Danese
6,465,860 B2 10/2002 Shigenaka et al.
6,475,839 B2 11/2002 Zhang et al.
6,479,093 B2 11/2002 Lauffer et al.
6,483,116 B1 11/2002 Kozlowski et al.
6,483,929 B1 11/2002 Murakami et al.
6,486,046 B2 11/2002 Fttjimura et al.
6,486,522 B1 11/2002 Bishay et al.
6,493,567 B1 12/2002 Krivitski et al.
6,498,336 B1 12/2002 Tian et al.
6,500,690 B1 12/2002 Yamagishi et al.
6,504,178 B2 1/2003 Carlson et al.
6,562,705 B1 5/2003 Ohara
6,580,053 B1 6/2003 Voutsas
6,583,936 B1 6/2003 Kaminsky et al.
6,586,318 B1 7/2003 Lu
6,597,025 B2 7/2003 Lauter et al.
6,607,927 B2 8/2003 Ramappa et al.
6,624,049 B1 9/2003 Yamazaki
6,639,253 B2 10/2003 Duane et al.
6,653,554 B2 11/2003 Ishihara
6,667,528 B2 12/2003 Cohen et al.
6,677,655 B2 1/2004 Fitzergald
6,677,656 B2 1/2004 Francois
6,683,326 B2 1/2004 Iguchi et al.
6,689,209 B2 2/2004 Falster et al.
6,690,968 B2 2/2004 Mejia
6,734,455 B2 5/2004 Li
6,753,585 B1 6/2004 Kindt
6,756,104 B2 6/2004 Sokol et al.
6,759,262 B2 7/2004 Theil et al.
6,790,701 B2 9/2004 Shigenaka et al.
6,796,144 B2 9/2004 Shepard et al.
6,800,541 B2 10/2004 Okumura
6,801,799 B2 10/2004 Mendelson
6,803,555 B1 10/2004 Parrish et al.
6,815,685 B2 11/2004 Wany
6,818,535 B2 11/2004 Lu et al.
6,822,313 B2 11/2004 Matsushita
6,825,057 B1 11/2004 Heyers et al.
6,864,156 B1 3/2005 Conn
6,864,190 B2 3/2005 Han et al.
6,867,806 B1 3/2005 Lee et al.
6,876,003 B1 4/2005 Nakamura et al.
6,897,118 B1 5/2005 Poon et al.
6,900,839 B1 5/2005 Kozlowski et al.
6,907,135 B2 6/2005 Gifford
6,911,375 B2 6/2005 Guarini et al.
6,919,587 B2 7/2005 Ballon et al.
6,923,625 B2 8/2005 Sparks
6,927,432 B2 8/2005 Holm et al.
6,984,816 B2 1/2006 Holm et al.
7,008,854 B2 3/2006 Forbes
7,041,525 B2 5/2006 Clevenger et al.
7,057,256 B2 6/2006 Carey, III et al.
7,075,079 B2 7/2006 Wood
7,091,411 B2 8/2006 Falk et al.
7,109,517 B2 9/2006 Zaidi
7,112,545 B1 9/2006 Railkar et al.
7,126,212 B2 10/2006 Enquist et al.
7,132,724 B1 11/2006 Merrill
7,202,102 B2 4/2007 Yao
7,211,214 B2 5/2007 Chou
7,211,501 B2 5/2007 Liu et al.
7,235,812 B2 6/2007 Chu et al.
7,247,527 B2 7/2007 Shimomura et al.
7,247,812 B2 7/2007 Tsao
7,256,102 B2 8/2007 Nakata et al.
7,271,445 B2 9/2007 Forbes
7,271,835 B2 9/2007 Iizuka et al.
7,285,482 B2 10/2007 Ochi
7,314,832 B2 1/2008 Kountz et al.
7,315,014 B2 1/2008 Lee et al.
7,354,792 B2 4/2008 Carey, III et al.
7,358,498 B2 4/2008 Geng et al.
7,375,378 B2 5/2008 Manivannan et al.
7,390,689 B2 6/2008 Mazur et al.
7,413,909 B2 8/2008 Hutchens et al.
7,425,471 B2 9/2008 Bruland et al.
7,432,148 B2 10/2008 Li et al.
7,442,629 B2 10/2008 Mazur et al.
7,446,359 B2 11/2008 Lee et al.
7,446,807 B2 11/2008 Hong
7,456,452 B2 11/2008 Wells et al.
7,482,532 B2 1/2009 Yi et al.
7,498,650 B2 3/2009 Lauxtermann
7,504,325 B2 3/2009 Koezuka et al.
7,504,702 B2 3/2009 Mazur et al.
7,511,750 B2 3/2009 Murakami
7,521,737 B2 4/2009 Augusto
7,528,463 B2 5/2009 Forbes
7,542,085 B2 6/2009 Altice, Jr. et al.
7,547,616 B2 6/2009 Fogel et al.
7,551,059 B2 6/2009 Farrier
7,560,750 B2 7/2009 Niira et al.
7,564,631 B2 7/2009 Li et al.
7,569,503 B2 8/2009 Pan
7,582,515 B2 9/2009 Choi et al.
7,586,601 B2 9/2009 Eb stein
7,592,593 B2 9/2009 Kauffman et al.
7,595,213 B2 9/2009 Kwon et al.
7,605,064 B2 10/2009 Kizilyalli et al.
7,605,397 B2 10/2009 Kindem et al.
7,615,808 B2 11/2009 Pain et al.
7,618,839 B2 11/2009 Rhodes
7,619,269 B2 11/2009 Ohkawa
7,629,234 B2 12/2009 Bruland
7,629,582 B2 12/2009 Hoffman et al.
7,648,851 B2 1/2010 Fu et al.
7,649,156 B2 1/2010 Lee
7,687,740 B2 3/2010 Bruland et al.
7,705,879 B2 4/2010 Kerr et al.
7,728,274 B2 6/2010 Pilla et al.
7,731,665 B2 6/2010 Lee et al.
7,741,666 B2 6/2010 Nozaki et al.
7,745,901 B1 6/2010 McCaffrey et al.
7,763,913 B2 7/2010 Fan et al.
7,772,028 B2 8/2010 Adkisson et al.
7,781,856 B2 8/2010 Mazur et al.
7,800,192 B2 9/2010 Venezia et al.
7,800,684 B2 9/2010 Tatani
7,816,220 B2 10/2010 Mazur et al.

(56) **References Cited**

U.S. PATENT DOCUMENTS

7,828,983 B2 * 11/2010 Weber H01L 31/02363 216/17
7,847,253 B2 12/2010 Carey et al.
7,847,326 B2 12/2010 Park et al.
7,855,406 B2 12/2010 Yamaguchi et al.
7,875,498 B2 1/2011 Elbanhawy et al.
7,880,168 B2 2/2011 Lenchenkov
7,884,439 B2 2/2011 Mazur et al.
7,884,446 B2 2/2011 Mazur et al.
7,897,942 B1 3/2011 Bareket
7,910,964 B2 3/2011 Kawahito et al.
7,923,801 B2 4/2011 Tian et al.
7,935,941 B2 5/2011 Bruland et al.
7,968,834 B2 6/2011 Veeder
8,008,205 B2 8/2011 Fukushima et al.
8,013,411 B2 9/2011 Cole
8,030,726 B2 10/2011 Sumi
8,035,343 B2 10/2011 Seman, Jr.
8,058,615 B2 11/2011 McCaffrey
8,076,746 B2 12/2011 McCarten et al.
8,080,467 B2 12/2011 Carey et al.
8,088,219 B2 1/2012 Knerer et al.
8,093,559 B1 1/2012 Rajavel
RE43,169 E 2/2012 Parker
8,164,126 B2 4/2012 Moon et al.
8,207,051 B2 6/2012 Sickler et al.
8,247,259 B2 8/2012 Grolier et al.
8,259,293 B2 9/2012 Andreou et al.
8,268,403 B2 9/2012 Akiyama et al.
8,288,702 B2 10/2012 Veeder
8,355,545 B2 1/2013 Corcoran et al.
8,445,950 B2 5/2013 Iida et al.
8,445,985 B2 5/2013 Hiyama et al.
8,456,546 B2 6/2013 Oike
8,470,619 B2 6/2013 Bour
8,476,681 B2 7/2013 Haddad et al.
8,530,264 B2 9/2013 De Munck et al.
8,564,087 B2 10/2013 Yamamura et al.
8,603,902 B2 12/2013 Mazur et al.
8,604,405 B2 12/2013 Liu et al.
8,629,485 B2 1/2014 Yamamura et al.
8,649,568 B2 2/2014 Sato
8,680,591 B2 3/2014 Haddad et al.
8,698,272 B2 4/2014 Vineis
8,729,678 B2 5/2014 Shim et al.
8,742,528 B2 6/2014 Yamamura et al.
8,884,226 B2 11/2014 Miyazaki et al.
8,906,670 B2 12/2014 Gray
8,916,945 B2 12/2014 Sakamoto et al.
8,928,784 B2 1/2015 Watanabe et al.
8,994,135 B2 6/2015 Yamamura et al.
9,064,762 B2 6/2015 Yamaguchi
9,184,204 B2 11/2015 Hu
9,190,551 B2 11/2015 Yamamura et al.
9,209,345 B2 * 12/2015 Haddad H01L 27/14625
9,276,143 B2 3/2016 Mazur
9,369,641 B2 6/2016 Hu
9,419,159 B2 8/2016 Sakamoto et al.
9,478,572 B2 10/2016 Miyanami
9,559,215 B1 1/2017 Ahmed
9,659,984 B2 5/2017 Ohkubo et al.
9,673,250 B2 * 6/2017 Haddad H01L 27/14625
2001/0017344 A1 8/2001 Aebi
2001/0022768 A1 9/2001 Takahashi
2001/0044175 A1 11/2001 Barret et al.
2001/0044251 A1 11/2001 Cho et al.
2001/0044266 A1 11/2001 Katsuoka
2002/0020893 A1 2/2002 Lhorte
2002/0024618 A1 2/2002 Imai
2002/0034845 A1 3/2002 Fujimura et al.
2002/0056845 A1 5/2002 Iguchi et al.
2002/0060322 A1 5/2002 Tanabe et al.
2002/0079290 A1 6/2002 Holdermann
2002/0117699 A1 8/2002 Francois
2002/0126333 A1 9/2002 Hosono et al.
2002/0148964 A1 10/2002 Dausch et al.
2002/0173119 A1 * 11/2002 Dietrich H01L 21/76256 438/455
2002/0176650 A1 11/2002 Zhao et al.
2002/0182769 A1 12/2002 Campbell
2003/0016708 A1 1/2003 Albrecht et al.
2003/0024269 A1 2/2003 Shepard et al.
2003/0025156 A1 2/2003 Y amazaki et al.
2003/0029495 A1 2/2003 Mazur et al.
2003/0030083 A1 2/2003 Lee et al.
2003/0045074 A1 3/2003 Seibel et al.
2003/0045092 A1 3/2003 Shin
2003/0057357 A1 3/2003 Uppal et al.
2003/0111106 A1 6/2003 Nagano et al.
2003/0132449 A1 7/2003 Hosono et al.
2003/0183270 A1 10/2003 Falk et al.
2003/0210332 A1 11/2003 Frame
2003/0213515 A1 11/2003 Sano et al.
2003/0214595 A1 11/2003 Mabuchi
2003/0228883 A1 12/2003 Kusakari et al.
2004/0014307 A1 1/2004 Shin et al.
2004/0016886 A1 1/2004 Ringermacher et al.
2004/0041168 A1 3/2004 Hembree et al.
2004/0046224 A1 3/2004 Rossel et al.
2004/0077117 A1 4/2004 Ding et al.
2004/0080638 A1 4/2004 Lee
2004/0112426 A1 6/2004 Hagino
2004/0130020 A1 7/2004 Kuwabara et al.
2004/0161868 A1 8/2004 Hong
2004/0169834 A1 9/2004 Richter et al.
2004/0222187 A1 11/2004 Lin
2004/0252931 A1 12/2004 Belleville et al.
2004/0256561 A1 12/2004 Beuhler et al.
2005/0032249 A1 2/2005 Im et al.
2005/0040440 A1 2/2005 Murakami
2005/0051822 A1 3/2005 Manning
2005/0062041 A1 3/2005 Terakawa et al.
2005/0063566 A1 3/2005 Beek et al.
2005/0088634 A1 4/2005 Kosugi
2005/0093100 A1 5/2005 Chen et al.
2005/0101100 A1 5/2005 Kretchmer et al.
2005/0101160 A1 5/2005 Garg et al.
2005/0127401 A1 6/2005 Mazur et al.
2005/0134698 A1 6/2005 Schroeder et al.
2005/0150542 A1 7/2005 Madan
2005/0158969 A1 7/2005 Binnis et al.
2005/0184291 A1 8/2005 Cole et al.
2005/0184353 A1 8/2005 Mouli
2005/0211996 A1 9/2005 Krishna et al.
2005/0226287 A1 10/2005 Shah et al.
2005/0227390 A1 10/2005 Shtein et al.
2005/0227457 A1 10/2005 Kondo et al.
2006/0006482 A1 1/2006 Rieve et al.
2006/0011954 A1 1/2006 Ueda et al.
2006/0011955 A1 1/2006 Baggenstoss
2006/0060848 A1 3/2006 Chang et al.
2006/0071254 A1 4/2006 Rhodes
2006/0079062 A1 4/2006 Mazur et al.
2006/0086956 A1 4/2006 Furukawa et al.
2006/0097172 A1 5/2006 Park
2006/0097290 A1 5/2006 Hietanen
2006/0102901 A1 5/2006 Im et al.
2006/0118781 A1 6/2006 Rhodes
2006/0121680 A1 6/2006 Tanaka
2006/0128087 A1 6/2006 Bamji et al.
2006/0132633 A1 6/2006 Nam et al.
2006/0138396 A1 6/2006 Lin et al.
2006/0145148 A1 7/2006 Hirai et al.
2006/0145176 A1 7/2006 Lee
2006/0160343 A1 7/2006 Chong et al.
2006/0166475 A1 7/2006 Mantl
2006/0175529 A1 8/2006 Harmon et al.
2006/0180885 A1 8/2006 Rhodes
2006/0181627 A1 8/2006 Farrier
2006/0210122 A1 9/2006 Cleveland
2006/0214121 A1 9/2006 Schrey et al.
2006/0228897 A1 10/2006 Timans
2006/0231853 A1 10/2006 Tanaka
2006/0231914 A1 10/2006 Carey, III et al.

(56) **References Cited**

U.S. PATENT DOCUMENTS

2006/0238632 A1 10/2006 Shah
2006/0244090 A1 11/2006 Roy et al.
2006/0255340 A1 11/2006 Manivannan et al.
2006/0257140 A1 11/2006 Seger
2007/0035849 A1 2/2007 Li et al.
2007/0035879 A1 2/2007 Hall et al.
2007/0051876 A1 3/2007 Sumi et al.
2007/0052050 A1 3/2007 Dierickx
2007/0063219 A1 3/2007 Sa'ar et al.
2007/0076481 A1 4/2007 Tennant
2007/0102709 A1 5/2007 Burgener et al.
2007/0103580 A1 5/2007 Noto
2007/0115554 A1 5/2007 Breitung et al.
2007/0123005 A1 5/2007 Hiura et al.
2007/0125951 A1 6/2007 Snider et al.
2007/0131275 A1 6/2007 Kinsey et al.
2007/0138590 A1 6/2007 Wells et al.
2007/0145505 A1 6/2007 Kim et al.
2007/0178672 A1 8/2007 Tanaka et al.
2007/0187670 A1 8/2007 Hsu et al.
2007/0189583 A1 8/2007 Shimada et al.
2007/0194356 A1 8/2007 Moon et al.
2007/0194401 A1 8/2007 Nagai et al.
2007/0195056 A1 8/2007 Lloyd
2007/0200940 A1 8/2007 Gruhlke et al.
2007/0201859 A1 8/2007 Sarrat
2007/0204902 A1* 9/2007 Dutta H01L 31/0236 136/256
2007/0235827 A1 10/2007 Altice
2007/0237504 A1 10/2007 Nakashiba
2007/0243701 A1 10/2007 Ito et al.
2007/0247414 A1 10/2007 Roberts
2007/0262366 A1 11/2007 Baek et al.
2007/0290283 A1 12/2007 Park et al.
2007/0293056 A1 12/2007 Setsuhara et al.
2007/0296060 A1 12/2007 Tanabe et al.
2007/0298533 A1 12/2007 Yang et al.
2008/0002863 A1 1/2008 Northcott
2008/0020555 A1 1/2008 Shimomura et al.
2008/0026550 A1 1/2008 Werner et al.
2008/0036022 A1 2/2008 Hwang et al.
2008/0044943 A1 2/2008 Mazur et al.
2008/0076240 A1 3/2008 Veschtti et al.
2008/0099804 A1 5/2008 Venezia et al.
2008/0121280 A1 5/2008 Carnel et al.
2008/0121805 A1 5/2008 Tweet et al.
2008/0135099 A1 6/2008 Yu
2008/0142686 A1 6/2008 Konno et al.
2008/0158398 A1 7/2008 Yaffe et al.
2008/0170173 A1 7/2008 Park et al.
2008/0173620 A1 7/2008 Grek
2008/0174685 A1 7/2008 Shan et al.
2008/0178932 A1 7/2008 Den Boer et al.
2008/0179762 A1 7/2008 Cho et al.
2008/0191296 A1 8/2008 Wang et al.
2008/0191310 A1 8/2008 Wu et al.
2008/0192132 A1 8/2008 Bechtel et al.
2008/0192133 A1 8/2008 Abiru et al.
2008/0196761 A1 8/2008 Nakano et al.
2008/0198251 A1 8/2008 Xu et al.
2008/0202576 A1 8/2008 Hieslmair
2008/0213936 A1 9/2008 Hatai
2008/0223436 A1 9/2008 den Boer et al.
2008/0242005 A1 10/2008 Dozen et al.
2008/0251812 A1 10/2008 Yoo
2008/0257409 A1 10/2008 Li et al.
2008/0258604 A1 10/2008 Mazur et al.
2008/0266434 A1 10/2008 Sugawa et al.
2008/0266435 A1 10/2008 Agranov et al.
2008/0281174 A1 11/2008 Dietiker
2008/0284884 A1 11/2008 Makino et al.
2008/0303932 A1 12/2008 Wang et al.
2008/0309913 A1 12/2008 Fallon
2009/0002528 A1 1/2009 Manabe et al.
2009/0009596 A1 1/2009 Kerr et al.
2009/0014056 A1 1/2009 Hockaday
2009/0027640 A1 1/2009 Shibazaki
2009/0036783 A1 2/2009 Kishima
2009/0038669 A1 2/2009 Atanackovic
2009/0039397 A1 2/2009 Chao
2009/0050944 A1 2/2009 Hong
2009/0056797 A1 3/2009 Barnett et al.
2009/0057536 A1 3/2009 Hirose
2009/0065051 A1 3/2009 Chan et al.
2009/0078316 A1 3/2009 Khazeni et al.
2009/0090988 A1 4/2009 Ohgishi
2009/0095887 A1 4/2009 Saveliev
2009/0096049 A1 4/2009 Oshiyama et al.
2009/0101197 A1 4/2009 Morikawa
2009/0109305 A1 4/2009 Dai et al.
2009/0114630 A1 5/2009 Hawryluk
2009/0142879 A1 6/2009 Isaka et al.
2009/0146240 A1 6/2009 Carey, III et al.
2009/0151785 A1 6/2009 Namn et al.
2009/0160983 A1 6/2009 Lenchenkov
2009/0174026 A1 7/2009 Carey et al.
2009/0179199 A1 7/2009 Sano et al.
2009/0180010 A1 7/2009 Adkisson et al.
2009/0194671 A1 8/2009 Nozaki et al.
2009/0200454 A1 8/2009 Barbier et al.
2009/0200586 A1 8/2009 Mao et al.
2009/0200625 A1 8/2009 Venezia et al.
2009/0200626 A1 8/2009 Qian et al.
2009/0200631 A1 8/2009 Tai et al.
2009/0206237 A1 8/2009 Shannon et al.
2009/0211627 A1 8/2009 Meier et al.
2009/0213883 A1 8/2009 Mazur et al.
2009/0218493 A1 9/2009 McCaffrey et al.
2009/0223561 A1 9/2009 Kim et al.
2009/0227061 A1 9/2009 Bateman et al.
2009/0242019 A1 10/2009 Ramamoorthy et al.
2009/0242032 A1 10/2009 Yamazaki et al.
2009/0242933 A1 10/2009 Hu et al.
2009/0256156 A1 10/2009 Hsieh
2009/0256226 A1 10/2009 Tatani
2009/0261255 A1 10/2009 Nakamura et al.
2009/0273695 A1 11/2009 Mabuchi
2009/0278967 A1 11/2009 Toumiya
2009/0283807 A1 11/2009 Adkisson et al.
2009/0286347 A1* 11/2009 Kim H01L 31/0236 438/72
2009/0294787 A1 12/2009 Nakaji et al.
2009/0308450 A1 12/2009 Adibi et al.
2009/0308457 A1 12/2009 Smith et al.
2010/0000597 A1 1/2010 Cousins
2010/0013036 A1 1/2010 Carey
2010/0013039 A1 1/2010 Qian et al.
2010/0013593 A1 1/2010 Luckhardt
2010/0024871 A1 2/2010 Oh et al.
2010/0032008 A1 2/2010 Adekore
2010/0037952 A1 2/2010 Lin
2010/0038523 A1 2/2010 Venezia et al.
2010/0038542 A1 2/2010 Carey et al.
2010/0040981 A1 2/2010 Kiesel et al.
2010/0044552 A1 2/2010 Chen
2010/0051809 A1 3/2010 Onat et al.
2010/0052088 A1 3/2010 Carey
2010/0053382 A1 3/2010 Kuniba
2010/0055887 A1 3/2010 Piwczyk
2010/0059385 A1 3/2010 Li
2010/0059803 A1 3/2010 Gidon et al.
2010/0072349 A1 3/2010 Veeder
2010/0074396 A1 3/2010 Schmand et al.
2010/0083997 A1 4/2010 Hovel
2010/0084009 A1 4/2010 Carlson et al.
2010/0096718 A1 4/2010 Hynecek et al.
2010/0097609 A1 4/2010 Jaeger et al.
2010/0102206 A1 4/2010 Cazaux et al.
2010/0102366 A1 4/2010 Lee et al.
2010/0108864 A1 5/2010 Ohta et al.
2010/0109060 A1 5/2010 Mao et al.
2010/0116312 A1 5/2010 Peumans et al.
2010/0117181 A1 5/2010 Kim et al.
2010/0118172 A1 5/2010 McCarten et al.

(56) **References Cited**

U.S. PATENT DOCUMENTS

2010/0128161 A1 5/2010 Yamaguchi
2010/0128937 A1 5/2010 Yoo et al.
2010/0133635 A1 6/2010 Lee et al.
2010/0140733 A1 6/2010 Lee et al.
2010/0140768 A1 6/2010 Zafiropoulo
2010/0143744 A1 6/2010 Gupta
2010/0147383 A1 6/2010 Carey et al.
2010/0171948 A1 7/2010 Mazur et al.
2010/0181014 A1* 7/2010 Raymond G02B 5/003 156/209
2010/0190292 A1 7/2010 Alberts
2010/0200658 A1 8/2010 Olmstead et al.
2010/0201834 A1 8/2010 Maruyama et al.
2010/0213582 A9 8/2010 Coullard et al.
2010/0219506 A1 9/2010 Gupta
2010/0224229 A1 9/2010 Pralle et al.
2010/0240169 A1 9/2010 Petti et al.
2010/0245647 A1 9/2010 Honda et al.
2010/0258176 A1 10/2010 Kang et al.
2010/0264473 A1 10/2010 Adkisson et al.
2010/0289885 A1 11/2010 Lu et al.
2010/0290668 A1 11/2010 Friedman et al.
2010/0300505 A1 12/2010 Chen
2010/0300507 A1 12/2010 Heng et al.
2010/0313932 A1 12/2010 Kroll et al.
2011/0003424 A1 1/2011 De Ceuster et al.
2011/0019050 A1 1/2011 Yamashita
2011/0025842 A1 2/2011 King et al.
2011/0056544 A1 3/2011 Ji et al.
2011/0073976 A1 3/2011 Vaillant
2011/0095387 A1 4/2011 Carey et al.
2011/0104850 A1 5/2011 Weidman et al.
2011/0127567 A1 6/2011 Seong
2011/0140221 A1 6/2011 Venezia et al.
2011/0150304 A1 6/2011 Abe et al.
2011/0194100 A1 8/2011 Thiel et al.
2011/0201177 A1* 8/2011 Fournel H01L 21/76254 438/458
2011/0220971 A1 9/2011 Haddad
2011/0227138 A1 9/2011 Haddad
2011/0241148 A1 10/2011 Hiyama et al.
2011/0241152 A1 10/2011 Hsiao et al.
2011/0251478 A1 10/2011 Wieczorek
2011/0260059 A1 10/2011 Jiang et al.
2011/0266644 A1 11/2011 Yamamura et al.
2011/0292380 A1 12/2011 Bamji
2011/0303999 A1 12/2011 Sakamoto et al.
2012/0001293 A1* 1/2012 Ben Mohamed H01L 21/76254 257/506
2012/0001841 A1 1/2012 Gokingco et al.
2012/0024363 A1 2/2012 Dimer et al.
2012/0024364 A1 2/2012 Carey, III et al.
2012/0025199 A1 2/2012 Chen et al.
2012/0038811 A1 2/2012 Ellis-monaghan et al.
2012/0043637 A1 2/2012 King et al.
2012/0049242 A1 3/2012 Atanackovic et al.
2012/0049306 A1 3/2012 Ohba et al.
2012/0080733 A1 4/2012 Doan et al.
2012/0111396 A1 5/2012 Saylor et al.
2012/0147241 A1 6/2012 Yamaguchi
2012/0153127 A1 6/2012 Hirigoyen et al.
2012/0153128 A1 6/2012 Roy et al.
2012/0171804 A1 7/2012 Moslehi et al.
2012/0187190 A1 7/2012 Wang et al.
2012/0188431 A1 7/2012 Takimoto
2012/0217602 A1 8/2012 Enomoto
2012/0222396 A1 9/2012 Clemen
2012/0228473 A1 9/2012 Yoshitsugu
2012/0235268 A1* 9/2012 Niira H01L 31/048 257/432
2012/0274744 A1 11/2012 Wan
2012/0291859 A1 11/2012 Vineis et al.
2012/0300037 A1 11/2012 Laudo
2012/0305063 A1 12/2012 Moslehi et al.
2012/0312304 A1 12/2012 Lynch et al.
2012/0313204 A1 12/2012 Haddad et al.
2012/0313205 A1 12/2012 Haddad et al.
2012/0326008 A1 12/2012 Mckee et al.
2013/0001553 A1 1/2013 Vineis et al.
2013/0020468 A1 1/2013 Mitsuhashi et al.
2013/0026531 A1 1/2013 Seo et al.
2013/0082343 A1 4/2013 Fudaba et al.
2013/0135439 A1 5/2013 Kakuko et al.
2013/0168792 A1 7/2013 Haddad et al.
2013/0168803 A1 7/2013 Haddad et al.
2013/0200251 A1 8/2013 Velichko
2013/0207212 A1 8/2013 Mao et al.
2013/0207214 A1 8/2013 Haddad et al.
2013/0285130 A1 10/2013 Ting
2014/0054662 A1 2/2014 Yanagita et al.
2014/0138785 A1* 5/2014 Pralle H01L 27/14627 257/432
2014/0198240 A1 7/2014 Rhoads
2014/0247378 A1 9/2014 Sharma et al.
2014/0352779 A1* 12/2014 Smirnov H01L 31/02363 136/256
2014/0374868 A1 12/2014 Lee et al.
2015/0076468 A1* 3/2015 Yamaguchi G02B 1/118 257/40
2017/0141258 A1 5/2017 McFarland
2017/0244920 A1 8/2017 Ohkubo et al.

FOREIGN PATENT DOCUMENTS

CN 1614789 5/2005
CN 101053065 A 10/2007
CN 101241923 8/2008
CN 101404307 4/2009
CN 101423942 5/2009
CN 101465361 6/2009
CN 101478013 7/2009
CN 101634026 1/2010
CN 101634027 1/2010
CN 101740597 6/2010
CN 101818348 9/2010
CN 201725796 1/2011
CN 101978498 2/2011
CN 102270646 12/2011
DE 19838439 4/2000
EP 0473439 3/1992
EP 0566156 10/1993
EP 1347670 A1 9/2003
EP 1630871 1/2006
EP 1873840 1/2008
EP 2073270 5/2012
EP 2509107 10/2012
FR 2827707 1/2003
GB 2030766 4/1980
JP S5771188 5/1982
JP S57173966 10/1982
JP S63116421 5/1988
JP H02152226 6/1990
JP H02237026 9/1990
JP H03183037 8/1991
JP H04318970 11/1992
JP H06104414 4/1994
JP 1994244444 A 9/1994
JP H06244444 9/1994
JP H06267868 9/1994
JP H06267868 A 9/1994
JP H06275641 9/1994
JP H0774240 3/1995
JP H07235658 5/1995
JP H07183484 7/1995
JP 9148594 6/1997
JP H09298308 11/1997
JP 11077348 3/1999
JP 11097724 4/1999
JP 2000164914 6/2000
JP 2001007381 1/2001
JP 2001024936 1/2001
JP 2001189478 7/2001

(56) **References Cited**

FOREIGN PATENT DOCUMENTS

JP	2001257927	9/2001
JP	2001339057	12/2001
JP	2002043594	2/2002
JP	2002134640	5/2002
JP	2002513176	5/2002
JP	2002190386	7/2002
JP	2003058269	2/2003
JP	2003104121	4/2003
JP	2003163360	6/2003
JP	2003242125	8/2003
JP	2003258285	9/2003
JP	2003308130	10/2003
JP	2004047682	2/2004
JP	2004273886	9/2004
JP	2004273887	9/2004
JP	2005339425	12/2005
JP	2006033493	2/2006
JP	2006147991	6/2006
JP	2006173381	6/2006
JP	2006210701	8/2006
JP	2006255430	9/2006
JP	2006261372	9/2006
JP	2007122237	5/2007
JP	2007165909	6/2007
JP	2007180642	7/2007
JP	2007180643	7/2007
JP	2007258684	10/2007
JP	2007305675	11/2007
JP	2008099158	4/2008
JP	2008167004	7/2008
JP	2008187003	8/2008
JP	2008283219	11/2008
JP	2008294698	12/2008
JP	2009021479	1/2009
JP	2009152569	7/2009
JP	2009253683	10/2009
JP	2010278472	12/2010
JP	2011003860	1/2011
JP	2011091128	5/2011
JP	2012054321	3/2012
JP	2012169530	9/2012
JP	2012191005	10/2012
JP	2012212349	11/2012
KR	20010061058	4/2001
KR	2005039273	4/2005
KR	20060020400	3/2006
KR	20080014301	2/2008
KR	100825808	4/2008
KR	20080097709	11/2008
KR	20090077274	7/2009
KR	20100026463	3/2010
KR	20100118864	11/2010
KR	20110079323	7/2011
KR	20060052278	5/2016
KR	20170070266	6/2017
TW	200627675	8/2006
TW	200818529	4/2008
WO	WO 91/14284	9/1991
WO	WO 2000031679	6/2000
WO	WO 0131842	3/2001
WO	WO 0135601	5/2001
WO	WO 2002041363	5/2002
WO	WO 2003059390	7/2003
WO	WO 2005029599	3/2005
WO	WO 2006043690	4/2006
WO	WO 2006054758	5/2006
WO	WO 2006/086014	8/2006
WO	WO 2008091242	7/2008
WO	WO 2008099524	8/2008
WO	WO 2008145097	12/2008
WO	WO 2009016846	2/2009
WO	WO 2009100023	8/2009
WO	WO 2009147085	12/2009
WO	WO 2010033127	3/2010
WO	WO 2011003871	1/2011
WO	WO 2011035188	3/2011
WO	WO 2011119618	3/2011
WO	WO 2012027290	3/2012
WO	WO 2012117931	9/2012
WO	WO 2012174752	12/2012
WO	WO 2014110484	7/2014

OTHER PUBLICATIONS

Amoruso et al., Emission of nanoparticles during ultrashort laser irradiation of silicon targets. Europhysics Letters 67, 404-410 (2004).

Arango et al., Charge transfer in photovoltaics consisting of interpenetrating networks of conjugated polymer and Ti02 nanoparticles. Applied Physics Letters 74, 1698-1700 (1999).

Beek et al., Efficient hybrid solar cells from zinc oxide nanoparticles and a conjugated polymer. Advanced Materials 16, 1009-1013 (2004).

Bentini et al., Surface doping of semiconductors by pulsed-laser irradiation in reactive atmosphere. Applied Physics A: Materials Science & Processing. 1988;45(4):317-324.

Blood et al., Electrical Characterization of Semiconductors. Reports on Progress in Physics 41, 157-257 (1978).

Bouhdata, A. et al. "Modeling of the Spectral Response of PIN Photodetectors Impact of Exposed Zone Thickness, Surface Recombination Velocity and Trap Concentration", Microelectronics Reliability 44, pp. 223-228 (2004).

Brus, Luminescence of Silicon Materials—Chains, Sheets, Nanoc1ystals, Nanowires, Microcrystals, and Porous Silicon. Journal of Physical Chemistry 98,3575-3581 (1994).

Bucksbaum et al., Rapid Melting and Regrowth Velocities in Silicon Heated by Ultraviolet Picosecond Laser-Pulses, Physical Review Letters 53, 182-185 (1984).

Bulgakov et al., Silicon clusters produced by femtosecond laser ablation: non-thermal emission and gas-phase condensation. Applied Physics AMaterials Science & Processing 79, 1591-1594 (2004).

Campbell et al., Light Trapping Properties of Pyramidally Textured Surfaces. Journal of Applied Physics 62, 243-249 (1987).

Carey et al, "High Sensitivity Silicon-Based VIS/NIR Photodetectors", CLEO 2004 (San Francisco, CA 2004) pp. 1-2.

Carey et al., In-situ doping of silicon using the gas immersion laser doping (GILD) process. Applied Surface Science. vol. 43, Issues 1-4, Dec. 2, 1989, pp. 325-332.

Carey et al., Visible and near-infared responsivity of femtosecondlaser microstrnctured silicon photodiodes. Opt. Lett. 2005;30: 1773-5.

Carey, Femtosecond-laser microstructuring of silicon for novel optoelectronic devices. Thesis. The Division of Engineering and Applied Sciences. Harvard University. Cambridge, MA. Jul. 2004 162 pages.

Cifre, Polycrystalline Silicon Films Obtained by Hot-Wire Chemical—Vapor-Deposition. Applied Physics aMaterials Science & Processing 59, 645-651 (1994).

Contreras et al., Progress toward 20% efficiency in Cu(In,Ca)Se-2 polycrystalline thin-film solar cells. Progress in Photovoltaics 7, 311-316 (1999).

Cuadra et al., Present status of intermediate band solar cell research. Thin Solid Films 451-52, 593-599 (2004).

Curtins et al., High-Rate Deposition of Amorphous Hydrogenated Silicon-Effect of Plasma Excitation-Frequency. Electronics Letters 23, 228-230 (1987).

Delley et al., Quantum Confinement in Si Nanocrystals. Physical Review B 47, 1397-1400 (1993).

Glezer et al., Ultrafast-laser driven micro-explosions in transparent materials. Applied Physics Letters 71, 882-884 (1997).

Glover et al., Probing paiticle synthesis during femtosecond laser ablation: initial phase transition kinetics. Applied Physics B Lasers and Optics 78, 995-1000 (2004).

Glover, Hydrodynamics of particle formation following femtosecond laser ablation. Journal of the Optical Society of America B—Optical Physics 20, 125-131 (2003).

(56) **References Cited**

OTHER PUBLICATIONS

Goetzbergeret al., Crystalline Silicon Solar Cells (ed.), Chapter 6, High Efficiency Solar Cells. New York: John Wiley& Sons Ltd, 1994.
Green, Recent developments in photovoltaics. Solar Energy 76, 3-8 (2004).
Greenham et al.,Charge sepai•ation and transport in conjugatedpolymerjsemiconductor-nanocrystal composites studied by photoluminescence quenching and photoconductivity. Physical Review B 54, 17628-17637 (1996).
Halls et al., Efficient Photodiodes from Interpenel:rating Polymer Networks. Nature 376, 498-500 (1995).
Hansen, Henri et al. "The Black Silicon Method: A Universal Method for determining The Parameter Setting of a Fluorine-Based Reactive Ion Etcher in Depp Silicon Trench Etching With Profile Control", J. Micromedch. Microeng. 5 (1'995) pp. 115-120.
Heisterkamp et al., Pulse energy dependence of subcellular dissection by femtosecond laser pulses. Optics Express 13, 3690-3696 (2005).
Henry, Limiting Efficiencies of Ideal Single and Multiple Energy Gap Terrestrial Solar-Cells. Journal of Applied Physics 51, 4494-4500 (1980).
Huang et al., "A uniform 290 nm periodic Square Strcuture on ZnO Fabricated by Two-Beam Femtosecond Laser Ablation," Nanotechnolgoy, 8 pp. 1-6 (2007).
Keppner et al., Passivation Properties of Amorphous and Microcrystalline Silicon Layers Deposited by Vhf-Gd for Crystalline Silicon Solar-Cells. Solar Energy Materials and Solar Cells 34, 201-209 (1994).
Luque et al., Increasing the efficiency of ideal solar cells by photon induced transitions at intermediate levels. Physical Review Letters 78, 5014-5017 (1997).
Marti et al., Limiting efficiencies for photovoltaic energy conversion in multigap systems. Solar Energy Materials and Solar Cells 43, 203-222 (1996).
Meier et al., Recent progress in micromorph solar cells. Journal of Non-Crystalline Solids 230, 1250-1256 (1998).
Meier etal., Complete Microc1ystalline P-1-N. SolarCell-Crystalline or Amorphous Cell Behavior. Applied Physics Letters 65, 860-862 (1994).
Mo et al., Sulfm point defects in crystalline and amorphous silicon. Physical Review B 70 (2004).
Morneault, K. et al., "ISDN Q.921—User Adaptation Layer," Network Working Group, Request for Comments: 3057, The Internet Society, pp. 1-66, (2001).
Morneault, K. et al., "SS7 MTP2—User Adaptation Layer," Network Working Group, Internet Draft, The Internet Engineering Task Force, pp. 1-94, (Feb. 2001).
Myers et al., Enhancing nearinfrared avalanche photodiode performance by femtosecond laser microstructuring. Applied Optics 45, 8825-8831 (2006).
Nayak et al.; "Femtosecond Laser-Induced Micro-Structuring of Thin a-Si:H Films", Material Research Society Symposium proceeedings; vol. 850; Nov. 28-Dec. 2, 2004; pp. MM1.8.1-MM 1.8.5.
Nirmal et al., Lwninescence photophysics in semiconductor nanocrystals. Accounts of Chemical Research 32. 407-414 (1999).
Ong et al., "Framework Architecture for Signaling Transport," Network Working Group, Request for Comments: 2719, The Internet Society, pp. 1-24, (Oct. 1999).
O'Regan et al., A Low-Cost, High-Efficiency Solar-Cell Based on DyeSensitized Colloidal Tio2 Films. Nature 353, 737-740 (1991).
Pavesi, Optical gain in silicon nanocrystals. Nature 408, 440-444 (2000).
Rath et al., Limited influence of grain boundary defects in hot-wire CVD polysilicon films on solar cell performance. Journal of Noncrystalline Solids 230, 1277-1281 (1998).
Reber et al., Crystalline silicon thin-film solar cellsrecent results at Fraunhofer ISE, Solar Energy 77, 865-875 (2004).
Sarnet et al., Laser doping for microelectronics and microtechnology. Proc.of SPIE vol. 5448 pp. 669-680.
Schaffer et al., Micromachining bulk glass by use offemtosecond laser pulses with nanojoule energy. Optics Letters 26, 93-95(2001).
Schuppler et al., Size, Shape, and Composition of Luminescent Species in Oxidized Si Nanocrystals and H-Passivated Porous Si. Physical Review B 52, 4910-4925 (1995).
Serpenguzel et al., "Temperature Dependence of Photoluminescence in Non-Crystalline Silicon", Photonics West (San Jose, CA, 2004) 454-462.
Seto, Electrical Properties of Polyc1ystalline Silicon Films. Jomnal of Applied Physics 46, 5247-5254 (1975).
Shali et al., Thin-film silicon solar cell technology. Progress in Photovoltaics 12, 113-142 (2004).
Sheehy et al., Chalcogen doping of silicon via intense femtosecondlaser irradiation. Materials Science and Engineering B—Solid State Materials for Advanced Technology 137, 289-294 (2007).
Sheehy et al., Role of the Background Gas in the Morphology and Optical Properties of Laser-Microstructured Silicon. Chem Mater. 2005; 17(14):3582-6.
Shen et al., "Femtosecond laser-induced formation of submicrometer spikes on silicon in water", Appllied Physics Letter, vol. 85(23), p. 5694 (2004).
Shockley et al., Detailed Balance Limit ofEfficiency of p-n Junction Solar Cells. Journal of Applied Physics 32,510-519 (1961).
Sidebottom, G. et al., "SS7 MTP3-User Adaptation Layer (M3UA)," Network Working Group, Internet Draft, The Internet Engineering Task Force, pp. 1-128, (Feb. 2001).
Sipe et al., Laser-Induced Periodic Surface-Structure .1. Theory. Physical Review B 27, 1141-1154 (1983).
Slaoui et al., Advanced inorganic materials for photovoltaics. Mrs Bulletin 32, 211-218 (2007).
Staebler et al., Stability of N-I-P. Amorphous-Silicon Solar-Cells. Applied Physics Letters 39, 733-735 (1981).
Stalmans et al. Porous silicon in crystalline silicon solar cells: A review and the effect on the internal quantum efficiency. Progress in Photovoltaics 6 233-246 (1998).
Stewart, R. et al. "Stream Control Transmission Protocol", Network Working Group, pp. 1-134 (Oct. 2000).
Stocks et al., Texturing ofpolycrystalline silicon. Solar Energy Materials and Solar Cells 40, 33-42 (1996).
Stupca et al., Enhancement of polycrystalline silicon solar cells using ultrathin films of silicon nanoparticle. Applied Physics Letters 91, 063107 (2007).
Svrcek et al., Ex situ prepared Si nanocrystals embedded in silica glass: Formation and characterization. Journal of Applied Physics 95, 3158-3163 (2004).
Svrcek et al., Silicon nanocrystals as light converter for solar cells. Thin Solid Films 451-52, 384-388 (2004).
Tiwari et al., A silicon nanocrystals based memo1y. Applied Physics Letters 68, 1377-1379 (1996).
Torres et al., Device grade microcrystalline silicon owing to reduced oxygen contamination, Applied Physics Letters 69, 1373-1375 (1996).
Tull et al., Formation of silicon nanoparticles and web-like aggregates by femtosecond laser ablation in a background gas. Applied Physics a—Materials Science & Processing 83, 341-346 (2006).
Tull et al., Silicon surface morphologies after femtosecond laser irradiation, Mrs Bulletin 31, 626-633 (2006).
Van der Zel, L. "SF6 and the Environment," EPRI, Nov. 2003.
Vigue, F. et al. "Visible-blind Ultraviolet Photodetectors based on ZnMgBeSe" Journal of Electronic Materials, vol. 30, No. 6, pp. 4190-4192 (2001).
Wilson et al., Quantum Confinement in Size-Selected, Surface-Oxidized Silicon Nanocrystals. Science 262, 1242-1244 (1993).
Wronski, Electronic Properties of Amorphous Silicon in Solar-Cell Operation Ieee Transactions on Electron Devices 24, 351-357 (1977).
Wu et al., "13.9%—efficient CdTe polycrystalline thin-film solar cells with an infrared transmission of ~so%", Progress in Photovoltaics 14, 471-483 (2006).
Younkin, R. et al. "Infrared absorption by conical silicon microstrnctures made in a variety of background gases using femtosecond-laserpulses," Proc. CLEO 2001 (Baltimore, MD, 2001) p. 556.

(56) **References Cited**

OTHER PUBLICATIONS

Yu et al., Polymer Photovoltaic CellsEnhanced Efficiencies via a Network ofInternal Donor-Acceptor Heterojunctions. Science 270, 1789-1791 (1995).
Zhao et al., 19.8% efficient "honeycomb" textured multicrystalline and 24.4% monocrystalline silicon solar cells. Applied Physics Letters 73, 1991-1993 (1998).
A. Arndt, J.F. Allison, J.G. Haynos, and A. Meulenberg, Jr., "Optical Properties of the COMSAT Non-reflective Cell," 11th IEEE Photovoltaic Spec. Conf., p. 40, 1975.
Agranov, et al., Pixel continues to shrink . . . Small Pixels for Novel CMOS Image Sensors, 4 pages.
Asom et al., Interstitial Defect Reactions in Silicon; Appl. Phys. Lett.; Jul. 27, 1987; pp. 256-258; vol. 51(4); American Institute of Physics.
Berger, Michael; Moth Eyes Inspire Self-Cleaning Antireflection Nanotechnology Coatings; 2008; 3 pages; Nanowerk LLC.
Berger, O., Inns, D. and Aberle, A.E. "Commercial White Paint as Back Surface Reflector for Thin-Film Solar Cells", Solar Energy Materials & Solar Cells, vol. 91, pp. 1215-1221,2007.
Bernhard, C.G., "Structural and Functional Adaptation in a Visual System" Endevor vol. 26, pp. 79-84, May 1967.
Betta et al.; Si-PIN X-Ray Detector Technology; Nuclear Instruments and Methods in Physics Research; 1997; pp. 344-348; vol. A, No. 395; Elsevier Science B.V.
Boden, S.A. et al.; Nanoimprinting for Antireflective Moth-Eye Surfaces; 4 pages; 2008.
Bogue: "From bolometers to beetles: the development of the thermal imaging sensors;" sensor Review; 2007; pp. 278-281; Emerald Group Publishing Limited (ISSN 0260-2288).
Borghesi et al.; "Oxygen Precipitation in Silicon," J. Appl. Phys., v. 77(9), pp. 4169-4244 (May 1, 1995).
Born, M. and E.Wolf, "Princip les of Optics, 7th Ed.", Cambridge University Press, 1999, pp. 246-255.
Brieger,S., O.Dubbers, S.Fricker, A.Manzke, C.Pfahler, A.Plettl, and P.Zlemann, "An Approach for the Fabrication of Hexagonally Ordered Arrays of Cylindrical Nanoholes in Crystalline and Amorphous Silicon Based on the Self-Organization of Polymer Micelles", Nanotechnology, vol. 17, pp. 4991-4994, 2006, doi:10.1088/0957-4884/17/19/036.
Buttgen, B.; "Demodulation Pixel Based on Static Drift Fields"; IEEE Transactions on Electron Devices, vol. 53, No. 11, Nov. 2006.
Byung Jun Park et al, Jpn. J. Appl. Phys. 46 2454, 2007, 5 pages.
Campbell, Stephen A., "The Science and Engineering of Microeletronic Fabrication, 2nd Ed.", Oxford University Press, 2001, pp. 406-411.
Carey et al., "Femtosecond-Laser-Assisted Microstructuring of Silicon Surfaces", Optics and Photonics News, 2003. 14, 32-36.
Carey, et al. "Femtosecond Laser-Assisted Microstructuring of Silicon for Novel Detector, Sensing and Display Technologies", LEOS 2003, 481-482, Tuscon, AR.
Carey, et al. "Femtosecond Laser-Assisted Microstructuring of Silicon for Novel Detector, Sensing and Display Technologies", LEOS; 2002, 97-98, Glasgos, Scotland, 2002.
Carey, et al., "Fabrication of Micrometer-Sized Conical Field Emitters Using Femtosecond Laser-Assisted Etching of Silicon," Proc. IVMC 2001, 75-76, UC Davis, Davis, CA.
Carey, et al., "Field Emission from Silicon. Microstructures Formed by Femtosecond Laser Assisted Etching," Proc. CLEO 2001 (Baltimore, MD 2001) 555-557.
Carey, et al., "High Sensitivity Silicon-Based VIS/NIR Photodetectors", Optical Society of America (2003) 1-2.
Carey, III; "Femtosecond-laser Microstructuring of Silicon for Novel Optoelectronic Devices"; Harvard University, Jul. 2004; (Thesis).
Carey, P.G. et al., "In-situ Doping of Silicon Using Gas Immersion Laser Doping (GILD) Process," Appl. Surf. Sci. 43, 325-332 (1989).
Chang, S.W., V.P.Chuang, S.T.Boles, and C.V.Thompson, "Metal-Catalyzed Etching of Vertically Aligned Polysilicon and Amorphous Silicon Nanowire Arrays by Etching Direction Confinement", Advanced Functional Materials, vol. 20, No. 24, pp. 4364-4370, 2010.
Chen, Q. et al.; Broadband moth-eye antireflection coatings fabricated by low-cost nanoimprinting; Applied Physics Letters 94; pp. 263118-1-263118-3; 2009; American Institute of Physics.
Chiang, Wen Jen Et al., "Silicon Nanocrystal-Based Photosensor on Low-Temperature Polycrystalline-Silicone Panels", Applied Physics Letters, 2007, 51120-1-51120-3, Ltt. 91, American Inst. of Physics, Melville, NY.
Chichkov, B.N. et al, "Femtosecond, picosecond and nanosecond laser ablation of solids" Appl. Phys. A 63, 109-115; 1996.
Chien et al, "Pulse Width Effect in Ultrafast Laser Processing of Materials," Applied Physics A, 2005, 1257-1263, 81, Springer Berlin, Heidelberg, Germany.
Choubey et al., On Evolution of CMOS Image Sensors, Proceedings of the 8th International Conference on Sensing Technology, Sep. 2-4, 2014, Liverpool, UK, pages.
Cilingiroglu et al., "An evaluation of MOS Interface-Trap Charge Pump as and Ultralow Constant-Current Generator," IEEE Journal of Solid-State Circuit, 2003, vol. 38, No. 1, Jan. 2003, 71-83.
Clapham, P.B. et al, "Reduction of Lens Reflexion by the Moth Eye Principle" Nature, vol. 244. Aug. 1973, pp. 281-282.
CMOSIS; "Global Shutter Image Sensors for Machine Vision Application"; Image Sensors Europe 2010, Mar. 23-25, 2010; .COPYRGT. copyright 2010.
Cotter, Jeffrey E.; Optical intensity of light in layers of silicon with rear diffuse reflectors; Journal of Applied Physics; Jul. 1, 1998; pp. 618-624; vol. 84, No. 1; American Institute of Physics.
Crouch et al., "Comparison of Structure and Properties of Femtosecond and Nanosecond Laser-Structured Silicon" Appl. Phys. Lett., 2004, 84,1850-1852.
Crouch et al., "Infrared Absorption by Sulfur-Doped Silicon Formed by Femtosecond Laser Irradiation", Appl. Phys. A, 2004, 79, 1635-1641.
Despeisse, et al.; "Thin Film Silicon Solar Cell on Highly Textured Substrates for High Conversion Efficiency"; 2004.
Detection of X-ray and Gamma-ray Photons Using Silicon Diodes; Dec. 2000; Detection Technology, Inc.; Micropolis, Finland.
Dewan, Rahul et al.; Light Trapping in Thin-Film Silicon Solar Cells with Submicron Surface Texture; Optics Express; vol. 17, No. 25; Dec. 7, 2009; Optical Society of America.
Deych et al.; Advances in Computed Tomography and Digital Mammography; Power Point; Nov. 18, 2008; Analogic Corp.; Peabody, MA.
Dobie, et al.; "Minimization of reflected light in photovoltaic modules"; Mar. 1, 2009.
Dobrzanski, L.A. et al.; Laser Surface Treatment of Multicrystalline Silicon for Enhancing Optical Properties; Journal of Materials Processing Technology; p. 291-296; 2007; Elsevier B.V.
Dolgaev et al., "Formation of Conical Microstructures Upon Laser Evaporation of Solids", Appl. Phys. A, 2001, 73, 177-181.
Duerinckx, et al.; "Optical Path Length Enhancement for >13% Screenprinted Thin Film Silicon Solar Cells"; 2006.
Dulinski, Wojciech et al.; Tests of backside illumincated monolithic CMOS pixel sensor in an HPD set-up; Nuclear Instruments and methods in Physics Research; Apr. 19, 2005; pp. 274-280; Elsevier B.V.
Fontaine, A Review of the 1.4 μm Pixel Generation, Technology Analysis Group Chipworks Inc., 2011, 4 pages.
Fontaine, Ray, A Survey of Enabling Technologies in Successful Consumer Digital Imaging Products (Part 3: Pixel Isolation Structures), http://www.techinsights.com,Jul. 24, 2017, 13 pages.
Forbes, L. and M.Y. Louie, "Backside Nanoscale Texturing to Improve IR Response of Silicon Photodetectors and Solar Cells," Nanotech, vol. 2, pp. 9-12, Jun. 2010.
Forbes; "Texturing, reflectivity, diffuse scattering and light trapping in silicon solar cells"; 2012.
Fowlkes et al., "Surface Microstructuring and Long-Range Ordering of Silicon Nanoparticles", Appl. Phys. Lett., 2002, 80 (20), 3799-3801.
Gibbons, J., "Ion Implantation in Semiconductors—Part II; Damage Production and Annealing", proceedings of the IEEE vol. 60, No. 9 pp. 1062-1096. Jun. 1972.

(56) **References Cited**

OTHER PUBLICATIONS

Gjessing, J. et al.; 2D back-side diffraction grating for impored light trapping in thin silicon solar cells; Optics Express; vol. 18, No. 6; pp. 5481-5495; Mar. 15, 2010; Optical Society of America.
Gjessing, J. et al.; 2D blazed grating for light trapping in thin silicon solar cells; 3 pages; 2010; Optical Society of America.
Gloeckler et al. Band-Gap Grading in Cu(In,Ga)Se2 Solar Cells, Journal of Physics and Chemistry of Solids; 2005; pp. 189-194; vol. 66.
Goetzberger, et al.; "Solar Energy Materials & Solar Cells"; vol. 92 (2008) pp. 1570-1578.
Han et al., "Evaluation of a Small Negative Transfer Gate Bias on the Performance of 4T CMOS Image Sensor Pixels," 2007 International Image Sensor Workshop, 238-240, Ogunquit, Maine.
Haug, et al.; "Light Trapping effects in thin film silicon solar cells"; 2009.
Her et al., "Microstructuring of Silicon with Femtosecond Laser Pulses," Applied Physics Letters, 1998, 1673-1675, vol. 73, No. 12, American Institute of Physics.
Her et al., "Novel Conical Microstructures Created in Silicon With Femtosecond Laser Pulses", CLEO 1998, 511-512, San Francisco, CA.
Her, et al., "Femtosecond laser-induced formation of spikes on silicon," Applied Physics A, 2000, 70, 383-385.
Hermann, S. et al.; Impact of Surface Topography and Laser Pulse Duration for Laser Ablation of Solar Cell Front Side Passivating SiNx Layers; Journal of Applied Physics; vol. 108, No. 11; pp. 114514-1-114514-8; 2010; American Institute of Physics.
High-Performance Technologies for Advanced Biomedical Applications; .COPYRGT. 2004Brochure; pp. 1-46; PerkinElmerOptoelectronics.
Holland; Fabrication of Detectors and Transistors on High-Resistivity Silicon; Nuclear Instruments and Methods in Physics Research, vol. A275, pp. 537-541 (1989).
Hong et al., "Cryogenic processed metal-semiconductor-metal (MSM) photodetectors on MBE grown ZnSe,", 1999, IEEE Transactions on Electron Devices, vol. 46, No. 6, pp. 1127-1134.
Hsieh et al., "Focal-Plane-Arrays and CMOS Readout Techniques of Infrared Imaging Systems," IEE Transactions on Circuits and Systems for Video Technology, 1997, vol. 7, No. 4, Aug. 1997, 594-605.
http://electroiq.com/insights-from-leading-edge/2016/09/iftle-303-sony-introduces-ziptronix-dbi-technology-in-samsung-galaxy-s7, "Omnivision was the first to sample BSI in 2007 but costs were too high and adoption was thus very low", (2016).
http://joseph-tang.blogspot.com/2017/, Oshiyama et al. , Near-infrared Sensitivity Enhancement of a Back-illuminated Complementary Metal Oxide Semiconductor Image Sensor with a Pyramid Surface for Diffraction Structure,(2017).
https://blogs.yahoo.co.jp/miyabiman_now/25628945.html.
Hu et al., "Solar Cells from Basic to Advanced Systems," McGraw Hill Book Co., 1983, 39, New York, New York.
Huang, et al.; "Key Technique for texturing a uniform pyramid structure with a layer of silicon nitride on monocrystalline silicon wafer" Applied Surface Science; 2013 pp. 245-249.
Huang, et al.; "Microstructured silicon photodetector"; Applied Physics Letters 89, 033506; 2006 American Institute of Physics; 2006.
Hüpkes, J. et al.; Light Scattering and Trapping in Different Thin Film Photovoltaic Devices; 24th European Photovoltaic Solar Energy Conference, Hamburg, Germany (Sep. 21-25, 2009); pp. 2766-2769.
Igalson et al. Defect States in the CIGS Solar cells by Photocapacitance and Deep Level Optical Spectroscopy; Bulletin of the Polish Academy of Sciences Technical Sciences; 2005; pp. 157-161; vol. 53(2).
IMEC, 3D Integrated Image Sensors for Smart Imaging Systems, Piet De Moor, 2010, 32 pages.
Itonaga et al., "Extremely-low-noise CMOS Image Sensor with high saturation capacity," 2011 International Electron Devices Meeting, Washington, DC, 2011, pp. 8.1.1-8.1.4.
Jansen, H. et al., "The Black Silicon Method: a universal method for determining the parameter setting of a flourine-based reactive ion etcher in deep silicon trench etching with profile control",J. Micromech. Microeng. vol. 5, 1995 pp. 115-120.
Job et al., "Doping of Oxidized Float Zone Silincon by Thermal Donors—A low Thermal Budget Doping Method for Device Applications?" Mat. Res. Soc. Symp. Pro.; v. 719, F9.5.1-F9.5.6 (2002).
Joy, T. et al.; Development of a Production-Ready, Back-Illuminated CMOS Image Sensor with Small Pixels; Electron Devices Meeting; pp. 1007-1010; 2007; IEEE.
Juntunen et al.; Advanced Photodiode Detector for Medical CT Imaging: Design and Performance; 2007; pp. 2730-2735; IEEE.
Kim et al.; "Strong Sub-Band-Gap Infrared Absorption in Silicon Supersaturated with Sulfur"; 2006 Appl. Phys. Lett. 88, 241902-1-241902-3.
Kitamura et al., "Suppression of crosstalk by using backside deep trench isolation for 1.12μm backside illuminated CMOS image sensor," 2012 International Electron Devices Meeting, San Francisco, CA, 2012, pp. 24.2.1-24.2.4.
Koh et al., "Simple nanostructuring on silicon surfaceby means of focused beam patterning and wet etching", Applied Surface Science, 2000 pp. 599-603.
Kolasinski et al., "Laser Assisted and Wet Chemical Etching of Silicon Nanostructures," J. Vac. Sci. Technol., A 24(4), Jul./Aug. 2006, 1474-1479.
Konstantatos et al., "Engineering the Temproal Response of Photoconductive Photodetectors via Selective Introduction of Surface Trap States," Nano Letters, v. 8(5), pp. 1446-1450 (Apr. 2, 2008).
Konstantatos et al., "PbS Colloidal Quantum Dot Photoconductive Photodetectors: Transport, Traps, and Gain," Appl. Phys. Lett., v. 91, pp. 173505-1-173505-3 (Oct. 23, 2007).
Korean Intellectual Property Office (KIPO), CMOS Image Sensor, KIPO, 2004, 29 pages.
Kray, D. et al.; Laser-doped Silicon Soalr Cells by Laser Chemical Processing (LCP) exceeding 20% Efficiency; 33rd IEEE Photovoltaic Specialist Conference; 3 pages; May 2008; IEEE.
Kroning et al.; X-ray Imaging Systems for NDT and General Applications; 2002; Fraunhofer Institute for Nondestructive Testing; Saarbrucken and Dresden, Germany.
Kryski; A High Speed 4 Megapixel Digital CMOS Sensor; 2007 International Image Sensor Workshop; Jun. 6-10, 2007.
Lee et al., SNR Performance Comparison of 1.4um Pixel : FSI, Light-guide, and BSI, 2011, 3 pages.
Li et al., "Gettering in High Resistive Float Zone Silicon Wafers," Transaction on Nuclear Science, vol. 36(1), pp. 290-294 (Feb. 1, 1989).
Li, "Design and Simulation of an Uncooled Double-Cantilever Microbolometer with the Potential for .about.mK NETD," 2004, Sensors and Actuators A, 351-359, vol. 112, Elsevier B.V.
Li, Hongsong et al.; An experimental study of the correlation between surface roughness and light scattering for rough metallic surfaces; Advanced Characterization Techniques for Optics, Semiconductors, and Nanotechnologies II; 2005; pp. 25780V-1-25780V-15; vol. 5878; SPIE Bellingham, WA.
Lin, A. et al.; Optimization of Random Diffraction Gratings in Thin-Film Solar Cells Using Genetic Algorithms; 2007; 1 page; SSEL Annual Report.
Low Dose Technologies; Power Point.
Madzharov, et al.; "Light trapping in thin-firm silicon solar cells for superstrate and substrate configuration" Abstract #1614, 218.sup.th ECS Meeting .COPYRGT. 2010 the Electrochemical Society.
"Masimo Rainbow Set Pulse Co-Oximetry," 2010, Masimo Corporation, Irvine, California, http://www.masimo.com/Rainbow/about.htm.
Mateus; C.F.R. et al.; Ultrabroadband Mirror Using Low-Index Cladded Subwavelength Grating; Photonics Technology Letters; vol. 16, Issue No. 2; pp. 518-520; Feb. 2004; IEEE.
Matsuno, Shigeru et al.; Advanced Technologies for High Efficiency Photovoltaic Systems; Mitsubishi Electric Advance; vol. 122; pp. 17-19; Jun. 2008.

(56) **References Cited**

OTHER PUBLICATIONS

Meynants, et al.; "Backside illuminated global shutter COMOS image sensors"; 2011 International Image Sensor Workshop; Jun. 11, 2011.
Minoglou et al., "Reduction of Electrical Crosstalk in Hybrid Backside Illuminated CMOS Imagers using Deep Trench Isolation," 2008 International Interconnect Technology Conference, Burlingame, CA, USA, 2008, pp. 129-131.
Moloney, A.M. et al.; Novel Black Silicon PIN Photodiodes; 8 pages; Jan. 25, 2006; SPIE.
Moon et al. Selective emitter using porous silicon for crystalline silicon solar cells. Solar Energy Materials & Solar Cells, v. 93, pp. 846-850 (2009).
Moses; Nuclear Medical Imaging—Techniques and Challenges; Power Point; Feb. 9, 2005; Lawrence Berkeley National Laboratory Department of Functional Imaging.
Munck, Generic building blocks for 3D integration and their application on hybrid CMOS image sensors, Katholieke Universiteit Leuven, Kapeldreef 75—B-3001 Heverlee, Sep. 2008, 328 pages.
Munday, J.N. et al.; Large Integrated Absorption Enhancement in Plasmonic Solar Cells by Combining Metallic Gratings and Antireflection Coatings; Nano Letters; vol. 11, No. 6; pp. 2195-2201; Oct. 14, 2010; American Chemical Society.
Murkin, JM and Arangol, M, "Near Infrared spectroscopy as an index of rain and tissue oxygenation," Bri. J. of Anathesia (BJA/PGA Supplement):13-il3 (2009).
Myers, Richard et al., "Enhancing Near-IR Avalanche Photodiodes Performance by Femtosecond Laser Microstructuring" Harvard Dept. of Physics.
Nauka et al., "New Intrinsic Gettering Process in Silicon Based on Interactions of Silicon Interstitials," J. App. Phys., vol. 60(2), pp. 615-621, Jul. 15, 1986.
Nauka et al., Intrinsic Gettering in Oxygen-Free Silicon; App. Phys. Lett., vol. 46(7), Apr. 4, 1985.
Nayak et al, "Semiconductor Laesr Crystallization of a—Si:H," SPIE Digital Library, 2003, 277-380, vol. 4977, Bellingham, Washington. 2003.
Nayak et al, "Semiconductor Laser Crystallization of a—Si:H on Conducting Tin-Oxide-Coated Glass for Solar Cell and Display Applications," Applied Physics A, 2005, 1077-1080, 80, Springer Berlin, Heidelberg, Germany.
Nayak et al, "Ultrafast-Laser-Assisted Chemical Restructuring of Silicon and Germanium Surfaces," Applied Surface Science, 2007, 6580-6583, vol. 253, Issue 15, Elsevier B.V.
Nayak, B.K. et al.; Ultrafast Laser Textured Silicon Solar Cells; Mater. Res. Soc. Symp. Proc.; vol. 1123; 6 pages; 2009; Materials Research Society.
Nayak, et al.; "Efficient light trapping in silicon solar cells by ultrafast-laser-induced self-assembled micro/nano structures"; Progress in Photovoltaics: Research and Applications; 2011.
Oden, et al.; "Optical and Infrared Detection Using Microcantilevers;" SPIE Digital Library on Oct. 13, 2010; vol. 2744; 10 pages.
Ohring, Milton."The Materials of Science of Thin Films"; pp. 176-179; Academic Press, 1992.
Pain, Bedabrata; "A Back-Illuminated Megapixel CMOS Image Sensor"; http://hdl.handle.net/2014/39312; May 1, 2005.
Pain, Bedabrata; Backside Illumination Technology for SOI-CMOS Image Sensors; 2009 IISW Symposium on Backside Illujination of Solid-State Image Sensors, Bergen Norway; Jun. 25, 2009; pp. 1-23.
Palm et al. CIGSSe Thin Film PB Modules: From Fundamental Investigators to Advanced Performance and Stability; Thin Solid Films; 2004; pp. 544-551; vol. 451-2.
Park et al., "Deep Trench Isolation for Crosstalk Suppression in Active Pixel Sensors with 1.7μm Pixel Pitch", in Japanese Journal of Applied Physics, vol. 46, No. 4B, pp. 2454-5457, 2007.
Payne, D.N.R. et al.; Characterization of Experimental Textured ZnO:Al Films for Thin Film Solar Cell Applications and Comparison with Commercial and Plasmonic Alternatives; Photovoltaic Specialists Conference (PVSC); pp. 1560-1564; 2010; IEEE.
Pedraza et al., "Silicon Microcolumn Arrays Grown by Nanosecond Pulsed-Excimer Laser Irradiation", Appl. Phys. Lett., 1999, 74 (16), 2322-2324, American Institute of Physics.
Pedraza et al., "Surface Nanostructuring of Silicon", Appl. Phys. A, 2003, 77, 277-284.
Rao, et al., Monolithic and Fully-Hybrid Backside Illuminated CMOS Imagers for Smart Sensing, IMEC, Kapeldreef 75, B-3001 Leuven, Belgium, 4 pages.
Rashkeev et al., "Hydrogen passivation and Activation of Oxygen Complexes in Silicon," American Institute of Physics, vol. 78(11), pp. 1571-1573 (Mar. 12, 2001).
Russell, et al.; "Nanosecond Eximer Laser Processing for Novel Microelectronic Fabrication"; Nanosecond Excimer Laser Processing; 6 pages; 1989.
Russell, Ramirez and Kelley, "Nanosecond Excimer Laser Processing for Novel Microelectronic Devices," US Navy, SPAWAR, San Diego, Techical Report, 2003.
Russell, Ramirez, Kelley, "Nanosecond Excimer Laser Processing for Novel Microelectronic Fabrication," SSC Pacific Technical Reports , pp. 228-233, 2003, vol. 4, US Navy.
Sai, H. et al.; Enhancement of Light Trapping in Thin-Film Hydrogenated Microcrystalline Si Solar Cells Using Back Reflectors with Self-Ordered Dimple Pattern; Applied Physics Letters; vol. 93; 2008; American Institute of Physics.
Sanchez et al., "Dynamics of the Hydrodynamical Growth of Columns on Silicon Exposed to ArF Excimer-Laser Irradiation", Appl. Phys. A, 66, 83-86 (1998).
Sanchez et al., "Whiskerlike Structure Growth on Silicon Exposed to ArF Excimer Laser Irradiation", Appl. Phys. Lett., 1996, 69 (5), 620-622.
Sarnet et al.; "Femtosecond laser for black silicon and photovoltaic cells"; Feb. 21, 2008, Proc. of SPIE; vol. 6881; pp. 1-15.
Senoussaoui, N. et al.; Thin-Film Solar Cells with Periodic Grating Coupler; Thin Solid Films; pp. 397-401; 2003; Elsevier B.V.
Serpenguzel et al., "Temperature Dependence of Photluminescence in Non-Crystalline Silicon", Photonics West (San Jose, CA, 2004) 454-462.
Shen et al., "Formation of Regular Arrays of Silicon Micorspikes by Femotsecond Laser Irradiation Through a Mask", Appl. Phys. Lett., 82, 1715-1717 (2003).
Solar Energy Research Institute, "Basic Photovoltaic Principles and Methods," Van Nostrand Reinhold Co., NY 1984, pp. 45-47 and 138-142.
Solhusvik, J. et al. "A 1280x960 3.75um pixel CMOS imager with Triple Exposure HDR," Proc. of 2009 International Image Sensor Workshop, Bergen, Norway, Jun. 22-28, 2009.
STMicroelctronics, BSI—technical challenges, IISW-2009, Bergen. Jun. 25, 2009, 37 pages.
Stone et al.; The X-ray Sensitivity of Amorphous Selenium for Mammography;.Am. Assoc. Phys. Med.; Mar. 2002; pp. 319-324; vol. 29 No. 3; Am. Assoc. Phys. Med.
Szlufcik, J. et al.; Simple Integral Screenprinting process for selective emitter polycrystalline silicon solar cells; Applied Physics Letters; vol. 59, No. 13; Sep. 23, 1991; American Institute of Physics.
Tabbal et al., "Formation of Single Crystal Sulfur Supersaturated Silicon Based Junctions by Pulsed Laser Melting". 2007, J. Vac. Sci. Technol. B25(6), 1847-1852.
Takayanagi, et al.; "A 600.times.600 Pixel, 500, fps CMOS Image Sensor with a 4.4 jum Pinned Photodiode 5-Transistor Global Shutter Pixel"; 2007 International Image Sensor Workshop; Jun. 6-10, 2007.
Tournier, et al., Pixel-to-Pixel isolation by Deep Trench technology, STMicroelectronics, 850, rue Jean Monnet—F-38926 Crolles Cedex—France, 2011, 4 pages.
Tournier, et al., Pixel-to-Pixel isolation by Deep Trench technology: Application to CMOS Image Sensor, https://www.researchgate.net/publication/268300742, 2011, 5 pages.
Tower, John R. et al.; Large Format Backside Illuminated CCD Imager for Space Surveillance; IEEE Transactions on Electron Devices, vol. 50, No. 1; Jan. 2003; pp. 218-224.
Tull; "Femtosecond Laser Ablation of Silicon: Nanoparticles, Doping and Photovotaics"; Harvard University, Jun. 2007 (Thesis).

(56) **References Cited**

OTHER PUBLICATIONS

Uehara et al., "A High-Sensitive Digital Photosensor Using MOS Interface-Trap Charge Pumping," IEICE Electronics Express, 2004, vol. 1, No. 18, 556-561.
Wilson, "Depth Distributions of Sulfur Implanted Into Silicon as a Function of Ion energy, Ion Fluence, and Anneal Temperature," 1984, Appl. Phys. 55(10, 3490-3494.
Winderbaum, S. et al.; Reactive ion etching (RIE) as a method for texturing polycrystalline silicon solar cells; Solar Energy Materials and Solar Cells; 1997; pp. 239-248; Elsevier Science B.V.
Wu et al., "Black Silicon" Harvard UPS 1999.
Wu et al., "Black Silicon: A New Light Absorber," APS Centennial Meeting (Mar. 23, 1999).
Wu et al., "Femtosecond laser-gas-solid interactions," Thesis presented to the Department of Physics at Harvard University, pp. 1-113, 126-136, Aug. 2000.
Wu et al., "Visible Luminescence From Silicon Surfaces Microstructured in Air". Appl. Phys. Lett., vol. 81, No. 11, 1999-2001 (2002).
Wu, et al "Near-Unity Below-Band-Gap Absorption by Microstructured Silicon," 2001, Applied Physics Letters, 1850-1852, vol. 78, No. 13, American Institute of Physics.
Xiong , Y., et al, "Depth from focusing and defocusing", Computer Vision and Pattern Recognition, 1993. Proceedings CVPR '93., 1993 IEEE , Los Alamitos, CA, USA.IEEE Comput. Soc, Jun. 15, 1993 (Jun. 15, 1993), pp. 68-73.
Xu, Y., et al, "Infrared Detection Using Thermally Isolated Diode," Sensors and Actuators A, Elsevier Sequoia S.A., 1993, vol. 36, 209-217, Lausanne, Switzerland.
Yablonovitch, et al.; "Intensity Enhancement in Textured Optical Sheets for Solar Cells"; .COPYRGT. 1982 IEEE.
Yamamoto, K. et al.; NIR Sensitivity Enhancement by Laser Treatment for Si Detectors; Nuclear Instruments and Methods in Physics Research A; pp. 520-523; Mar. 31, 2010; Elsevier.
Yan, B.; Light Trapping Effect from Randomized Textures of Ag/ZnO Back Reflector on Hyrdrogenated Amorphous and Nanocrystalline Silicon Based Solar Cells; Thin Film Solar Technology II; vol. 7771; 2010; SPIE.
Yasutomi, et al.; "Two-Stage Charge Transfer Pixel Using Pinned Diodes for Low-Noise Global Shutter Imaging"; 2009 International Image Sensor Workshop; Mar. 28, 2009.
Yaung et al., "High performance 300mm backside illumination technology for continuous pixel shrinkage," 2011 International Electron Devices Meeting, Washington, DC, 2011, pp. 8.2.1-8.2.4.
Younkin et al., "Infrared Absorption by Conical Silicon Microstructures Made in a Variety of Background Gases Using Femtosecond-Laser Pulses", J. Appl. Phys., 93, 2626-2629 (2003).
Younkin, "Surface Studies and Microstructure Fabrication Using Femtosecond Laser Pulses," Thesis presented to the Division of Engineering & Applied sciences at Harvard University (Aug. 2001).
Yuan, et al.; "Efficient black silicon solar cell with a density-graded nanoporous surface: Optical properties, performance limitations, and design rules"; American Institute of Physics; Applied Physics Letters 95. 1230501 (2009) 3 pages.
Zaidi, S.H. et al.; Diffraction Grating Structures in Solar Cells; Photovoltaic Specialists Conference, 2000; 4 pages; Sep. 2000; IEEE.
Zhang et al, "Ultra-Shallow P+-Junction Formation in Silicon by Excimer Laser Doping: a Heat and Mass Transfer Perspective," Int. J. Heat Mass Transfer, 1996, 3835-3844, vol. 39, No. 18, Elsevier Science Ltd., Great Britain.
Zhong, S. et al. "Excellent Light Trapping in Ultrathin Solar Cells," AFM-Journal, May 2016 pp. 1-11.
Zhu et al., "Evolution of Silicon Surface Microstructures by Picosecond and Femtosecond Laser Irradiations," Applied Surface Science, 2005, 102-108, Elsevie, Amsterdam, NL.Ultra-Shallow P+-Junction Formation in Silicon by Excimer Laser Doping: a Heat and Mass Transfer Perspective, Int. J. Heat Mass Transfer, 1996, 3835-3844, vol. 39, No. 18, Elsevier Science Ltd., Great Britain.
Ziou et al., "Depth from defocus using the hermite transform", Image Processing, 1998. ICIP 98. Intl. Conference on Chicago, IL. Oct. 1998 pp. 958-962.

* cited by examiner

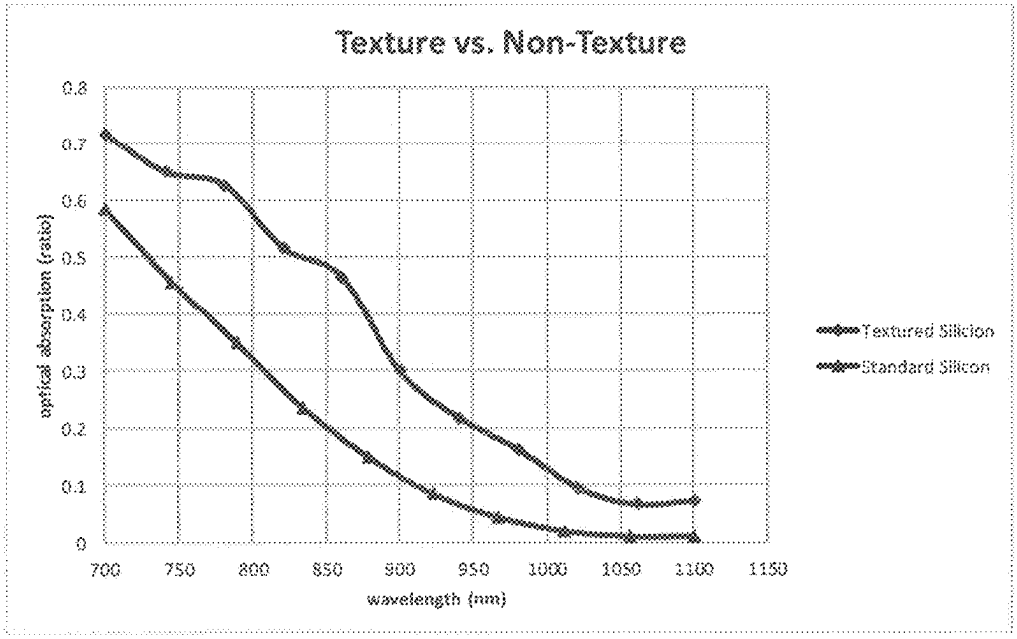
Texture vs. Non-Texture
optical absorption (ratio)
0.8
0.7
0.6
0.5
0.4
0.3
0.2
0.1
0
700
750
800
850
900
950
1000
1050
1100
1150
wavelength (nm)
Textured Silicon
Standard Silicon

FIG. 1

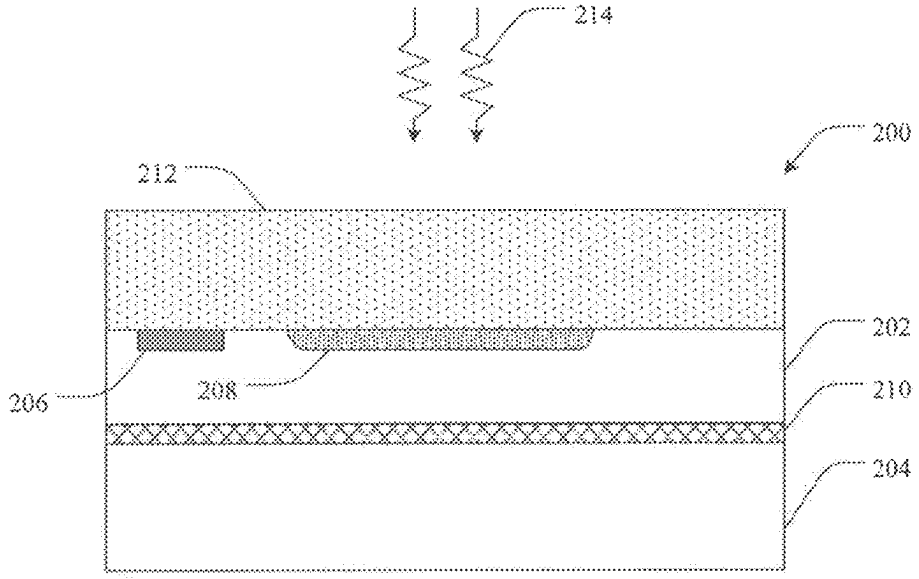
214
200
212
202
206
208
210
204

FIG. 2

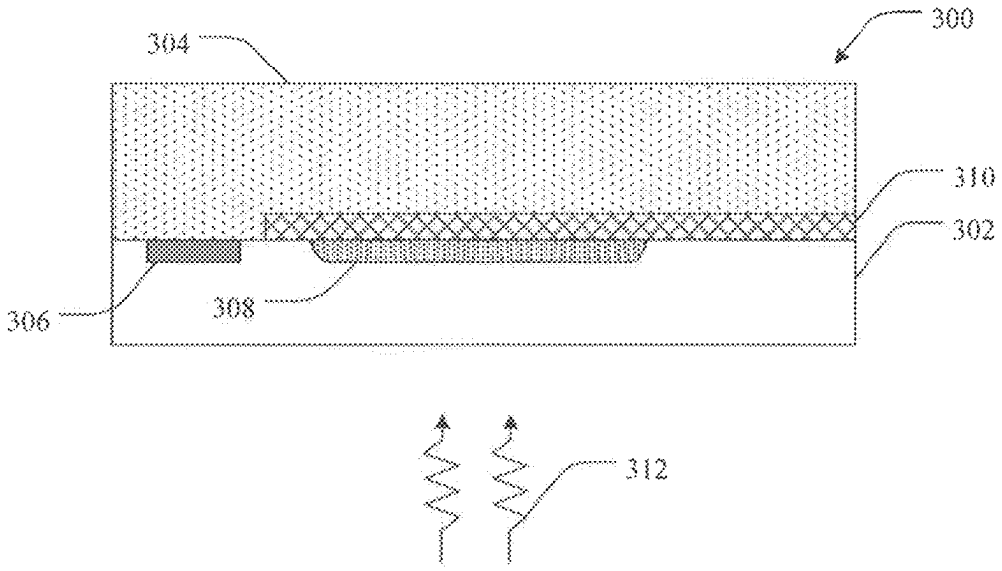

FIG. 3

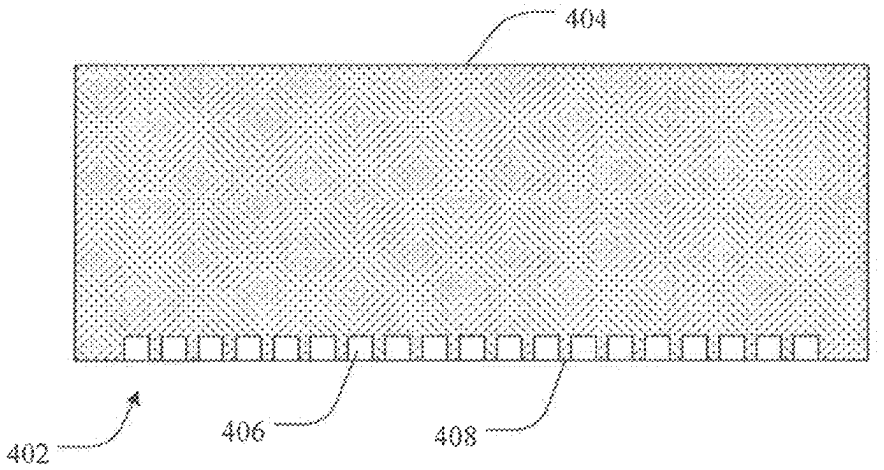

FIG. 4

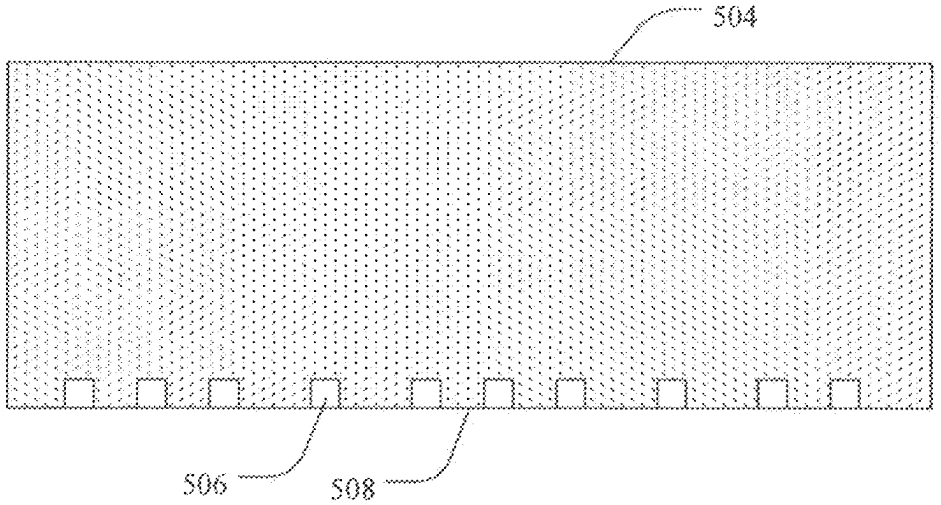

FIG. 5

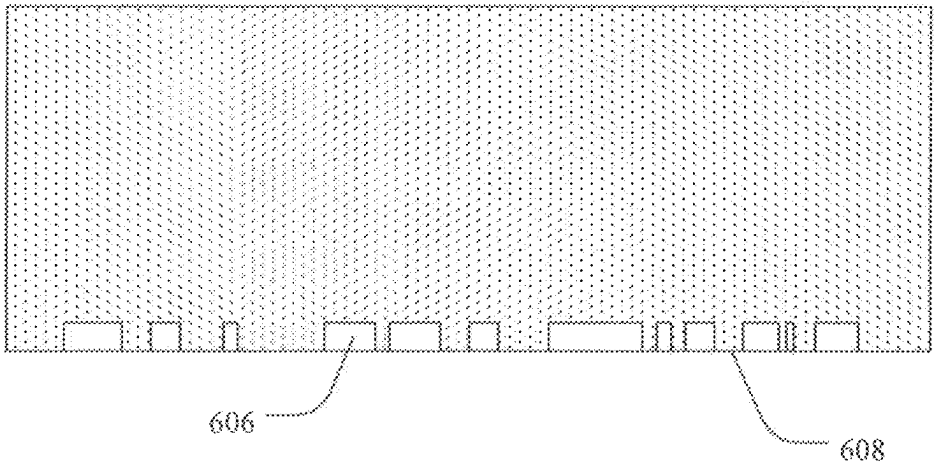

FIG. 6

SHALLOW TRENCH TEXTURED REGIONS AND ASSOCIATED METHODS

PRIORITY DATA

This application is a continuation of U.S. patent application Ser. No. 14/884,181, filed on Oct. 15, 2015, which is a continuation of U.S. patent application Ser. No. 14/084,392, filed Nov. 19, 2013, which claims the benefit of U.S. Provisional Patent Application Ser. No. 61/841,326, filed on Jun. 29, 2013, each of which are incorporated herein by reference in their entirety.

BACKGROUND

The interaction of light with semiconductor materials has been a significant innovation. Silicon imaging devices are used in various technologies, such as digital cameras, optical mice, video cameras, cell phones, and the like. Charge-coupled devices (CCDs) were widely used in digital imaging, and were later improved upon by complementary metal-oxide-semiconductor (CMOS) imagers having improved performance. Many traditional CMOS imagers utilize front side illumination (FSI). In such cases, electromagnetic radiation is incident upon the semiconductor surface containing the CMOS devices and circuits. Backside illumination (BSI) CMOS imagers have also been used, and in many designs electromagnetic radiation is incident on the semiconductor surface opposite the CMOS devices and circuits. CMOS sensors are typically manufactured from silicon and can covert visible incident light into a photocurrent and ultimately into a digital image. Silicon-based technologies for detecting infrared incident electromagnetic radiation have been problematic, however, because silicon is an indirect bandgap semiconductor having a bandgap of about 1.1 eV. Thus the absorption of electromagnetic radiation having wavelengths of greater than about 1100 nm is, therefore, very low in silicon.

SUMMARY

The present disclosure provides optoelectronic devices having enhanced light absorption characteristics, including systems incorporating such devices and various associated methods. In one aspect, for example, an optoelectronic device having enhanced absorption of electromagnetic radiation is provided. Such a device can include a semiconductor layer coupled to a support substrate and an array of shallow trench isolation surface features positioned between the semiconductor layer and the support substrate, the surface features positioned to interact with electromagnetic radiation that passes through the semiconductor layer. In one aspect, the semiconductor layer is single crystal silicon. In another aspect, a device layer can be coupled to the semiconductor layer on a side opposite the surface features.

In one aspect, a first bonding layer can be coupled between the semiconductor layer and the support substrate. While various configurations are contemplated, in one specific aspect first bonding layer can be coupled between the support substrate and the surface features. In another aspect, a second bonding layer can be positioned between the first bonding layer and the support substrate. In yet another aspect, a reflector layer can be disposed between the first bonding layer and the second bonding layer.

The surface features can have a variety of configurations and can be formed in a variety of locations between the semiconductor layer and the semiconductor support. For example, in one aspect the surface features can be formed in the support substrate. In another aspect, the surface features can be formed in the semiconductor layer. Furthermore, in one aspect the surface features can be arranged according to a predetermined pattern. In one specific aspect, such a predetermined pattern can be an at least substantially uniform grid. In specific aspect, such a predetermined pattern can be a non-uniform arrangement. Additionally, in one aspect the surface features can have an at least substantially uniform height. In another aspect, the surface features are not uniform in height.

Additionally, a variety of architectural configurations are contemplated. For example, in one aspect the device can be architecturally configured as a front-side illuminated optoelectronic device. In another aspect, the device can be architecturally configured as a back-side illuminated optoelectronic device.

In another aspect, a method of making an optoelectronic device is provided. Such a method can include creating an array of surface features using shallow trench isolation etching and bonding the array of surface features between a support substrate and a semiconductor layer. In another aspect, creating the array of surface features can further include creating the array of surface features on at least a portion of a surface of the semiconductor layer. In yet another aspect, creating the array of surface features further includes creating the array of surface features on at least a portion of a surface of the support substrate. Furthermore, in one aspect bonding the array of surface features between the support substrate and the semiconductor layer can further include depositing a first bonding layer onto the semiconductor layer and bonding the first bonding layer to a second bonding layer disposed on the support substrate. In some aspects a reflector can be deposited on at least one of the first bonding layer or the second bonding layer prior to bonding the semiconductor layer to the support substrate. In a further aspect the method can include thinning the semiconductor layer at a surface opposite the support substrate to a thickness of from about 1 microns to about 10 microns to create a pristine thinned surface and forming a device layer on the thinned surface. The semiconductor can then be further processed as desired to form the optoelectronic device.

BRIEF DESCRIPTION OF THE DRAWINGS

For a further understanding of the nature and advantage of the present disclosure, reference is being made to the following detailed description of embodiments and in connection with the accompanying drawings, in which:

FIG. **1** provides data showing the optical absorption of textured silicon compared to standard silicon as a function of wavelength in accordance with an embodiment of the present disclosure;

FIG. **2** is a cross-sectional view of an image sensor in accordance with another embodiment of the present disclosure;

FIG. **3** is a cross-sectional view of an image sensor in accordance with another embodiment of the present disclosure;

FIG. **4** is a cross-sectional view of a textured layer associated with a substrate in accordance with another embodiment of the present disclosure;

FIG. **5** is a cross-sectional view of a textured layer associated with the substrate in accordance with another embodiment of the present disclosure; and

FIG. **6** is a cross-sectional view of a textured region associated with the substrate in accordance with another embodiment of the present layer.

DETAILED DESCRIPTION

Before the present disclosure is described herein, it is to be understood that this disclosure is not limited to the particular structures, process steps, or materials disclosed herein, but is extended to equivalents thereof as would be recognized by those ordinarily skilled in the relevant arts. It should also be understood that terminology employed herein is used for the purpose of describing particular embodiments only and is not intended to be limiting.

Definitions

The following terminology will be used in accordance with the definitions set forth below.

It should be noted that, as used in this specification and the appended claims, the singular forms "a," and, "the" include plural referents unless the context clearly dictates otherwise. Thus, for example, reference to "a dopant" includes one or more of such dopants and reference to "the layer" includes reference to one or more of such layers.

As used herein, the terms "light" and "electromagnetic radiation" can be used interchangeably and can refer to electromagnetic radiation in the ultraviolet, visible, near infrared and infrared spectra. The terms can further more broadly include electromagnetic radiation such as radio waves, microwaves, x-rays, and gamma rays. Thus, the term "light" is not limited to electromagnetic radiation in the visible spectrum. Many examples of light described herein refer specifically to electromagnetic radiation in the visible and infrared (and/or near infrared) spectra. For purposes of this disclosure, visible range wavelengths are considered to be from approximately 350 nm to 800 nm and non-visible wavelengths are considered to be longer than about 800 nm or shorter than about 350 nm. Furthermore, the infrared spectrum is considered to include a near infrared portion of the spectrum including wavelengths of approximately 800 to 1100 nm, a short wave infrared portion of the spectrum including wavelengths of approximately 1100 nm to 3 micrometers, and a mid-to-long wavelength infrared (or thermal infrared) portion of the spectrum including wavelengths greater than about 3 micrometers up to about 30 micrometers. These are generally and collectively referred to herein as "infrared" portions of the electromagnetic spectrum unless otherwise noted.

As used herein, the term "detection" refers to the sensing, absorption, and/or collection of electromagnetic radiation.

As used herein, the term "backside illumination" refers to a device architecture design whereby electromagnetic radiation is incident on a surface of a semiconductor material that is opposite a surface containing the device circuitry. In other words, electromagnetic radiation is incident upon and passes through a semiconductor material prior to contacting the device circuitry.

As used herein, the term "frontside illumination" refers to a device architecture design whereby electromagnetic radiation is incident on a surface of a semiconductor material that contains the device circuitry. In other words, electromagnetic radiation is incident upon and passes through the device circuitry region prior to contacting the semiconductor material.

As used herein, the term "absorptance" refers to the fraction of incident electromagnetic radiation absorbed by a material or device.

As used herein, the terms "textured layer" and "textured surface" can be used interchangeably, and refer to a surface having a topology with nano- to micron-sized surface variations. Such a surface topology can be formed by a variety of known STI techniques. It is noted that laser ablation techniques, at least in one aspect, are specifically disclaimed. While the characteristics of such a surface can be variable depending on the materials and techniques employed, in one aspect such a surface can include micron-sized structures (e.g. about 1 μm to about 10 μm). In yet another aspect, the surface can include nano-sized and/or micron-sized structures from about 5 nm and about 10 μm. In another aspect, surface structures can be from about 100 nm to about 1 micron. A variety of criteria can be utilized to measure the size of such structures. For example, for cone-like structures the above ranges are intended to be measured from the peak of a structure to the valley formed between that structure and an adjacent neighboring structure. For structures such as nanopores, the above ranges are intended to be approximate diameters. Additionally, the surface structures can be spaced at various average distances from one another. In one aspect, neighboring structures can be spaced at a distance of from about 50 nm to about 2 μm. Such spacing is intended to be from a center point of one structure to the center point of a neighboring structure.

As used herein, the term "substantially" refers to the complete or nearly complete extent or degree of an action, characteristic, property, state, structure, item, or result. For example, an object that is "substantially" enclosed would mean that the object is either completely enclosed or nearly completely enclosed. The exact allowable degree of deviation from absolute completeness may in some cases depend on the specific context. However, generally speaking the nearness of completion will be so as to have the same overall result as if absolute and total completion were obtained. The use to of "substantially" is equally applicable when used in a negative connotation to refer to the complete or near complete lack of an action, characteristic, property, state, structure, item, or result. For example, a composition that is "substantially free of" particles would either completely lack particles, or so nearly completely lack particles that the effect would be the same as if it completely lacked particles. In other words, a composition that is "substantially free of" an ingredient or element may still actually contain such item as long as there is no measurable effect thereof.

As used herein, the term "about" is used to provide flexibility to a numerical range endpoint by providing that a given value may be "a little above" or "a little below" the endpoint.

As used herein, a plurality of items, structural elements, compositional elements, and/or materials may be presented in a common list for convenience. However, these lists should be construed as though each member of the list is individually identified as a separate and unique member. Thus, no individual member of such list should be construed as a de facto equivalent of any other member of the same list solely based on their presentation in a common group without indications to the contrary.

Concentrations, amounts, and other numerical data may be expressed or presented herein in a range format. It is to be understood that such a range format is used merely for convenience and brevity and thus should be interpreted flexibly to include not only the numerical values explicitly recited as the limits of the range, but also to include all the

individual numerical values or sub-ranges encompassed within that range as if each numerical value and sub-range is explicitly recited. As an illustration, a numerical range of "about 1 to about 5" should be interpreted to include not only the explicitly recited values of about 1 to about 5, but also include individual values and sub-ranges within the indicated range. Thus, included in this numerical range are individual values such as 2, 3, and 4 and sub-ranges such as from 1-3, from 2-4, and from 3-5, etc., as well as 1, 2, 3, 4, and 5, individually.

This same principle applies to ranges reciting only one numerical value as a minimum or a maximum. Furthermore, such an interpretation should apply regardless of the breadth of the range or the characteristics being described.

The Disclosure

Traditional silicon photodetecting imagers have limited light absorption/detection properties. For example, such silicon based detectors can be mostly transparent to infrared light, particularly with thin silicon layers. In some cases, other materials such as InGaAs can be used to detect infrared light having wavelengths greater than about 1000 nm, silicon is still commonly used to detect wavelengths in the visible spectrum (i.e. visible light, 350 nm-800 nm). Traditional silicon materials require substantial optical path lengths to detect photons from electromagnetic radiation having wavelengths longer than approximately 700 nm. As a result, visible light can be absorbed at relatively shallow depths in silicon, and absorption of longer wavelengths (e.g. 900 nm) in silicon of a standard wafer depth (e.g. approximately 750 μm) is poor. Increasing the thicknesses of the silicon layer to allow longer wavelength absorption thus greatly increases the thicknesses of the photodetecting imager.

The optoelectronic devices according to aspects of the present disclosure exhibit increased light absorption due to an increase in the effective optical path length for longer wavelengths of light as compared to traditional devices. The absorption depth in conventional silicon detectors is the depth into silicon at which the radiation intensity is reduced to about 36% of the value at the surface of the semiconductor. The increased optical path length of photons with the present silicon materials results in an apparent reduction in the absorption depth, or a reduced apparent or effective absorption depth. For example, the effective absorption depth of silicon can be reduced such that these longer wavelengths can be absorbed in silicon layers that are less than 850 microns thick. In other words, by increasing the optical path length, these devices are able to absorb longer wavelengths (e.g. >1000 nm for silicon) within a thinner silicon material. In addition to absorbing light having longer wavelengths in thin silicon materials (e.g. less than 30 microns thick as compared to 700 microns thick), the response rate or response speed can also be increased by using such thin materials.

The optoelectronic devices of the present disclosure can be front side illumination (FSI) or back side illumination (BSI) devices. In a typical FSI imager, incident light enters the semiconductor device by first passing by transistors and metal circuitry. The light, however, can scatter off of the transistors and circuitry prior to entering the light sensing portion of the imager, thus causing optical loss and noise. A lens can thus be disposed on the topside of a FSI pixel to direct and focus the incident light to the light sensing active region of the device, thus at least partially avoiding the circuitry. A variety of lenses and lens configurations are contemplated, however in one aspect the lens can be a micro-lens.

BSI imagers, one the other hand, are configured such that incident light enters the device via the light sensitive region opposite the circuitry and is mostly absorbed prior to reaching the circuitry, thus greatly reducing scattering and/or noise. BSI designs also allow for greater sensitivity, smaller pixel architecture, and a high fill factor for the imager. Additionally, it should also be understood that devices according to aspects of the present disclosure, whether they be FSI or BSI, can be incorporated into complimentary metal-oxide-semiconductor (CMOS) imager architectures or charge-coupled device (CCD) imager architectures.

Generally, and without limitation, the present disclosure provides a variety of optoelectronic devices, such as, broadband photosensitive diodes, pixels, and imagers capable of detecting visible as well as infrared electromagnetic radiation, including associated methods of making such devices. In one specific aspect, for example, an optoelectronic device is provided having enhanced absorption of electromagnetic radiation. Such a device can include a semiconductor layer coupled to a support substrate and an array of shallow trench isolation surface features positioned between the semiconductor layer and the support substrate, the surface features positioned to interact with electromagnetic radiation that passes through the semiconductor layer.

It has thus been discovered that such an array of shallow trench isolation surface features positioned in an architecturally appropriate manner can greatly increase the optical absorption of silicon materials. As is shown in FIG. **1**, for example, such a textured region can increase the optical absorption of silicon as compared to non-textured silicon over an electromagnetic spectrum range of at least about 700 nm to about 1100 nm.

As can be seen in FIG. **2**, for example, a FSI device is shown **200** having a semiconductor layer **202** coupled to a support substrate **204**, where the semiconductor layer can include one or more doped regions **206**, **208**, that form at least one junction. A textured layer **210** including an array or plurality of STI surface features is positioned between the semiconductor layer **202** and the support substrate **204**. A circuitry layer **212** is coupled to the semiconductor layer **202** on a side opposite the support substrate **204**. Light **214** is shown impinging on the device **200** and passing through the circuitry layer **212** prior to contacting the semiconductor layer **202**. Light **214** that is not absorbed by and subsequently passes through the semiconductor layer **202** contacts the textured layer **210** and is redirected back into the semiconductor layer **202**, thus allowing light to be absorbed in a subsequent pass. As such, the textured layer **210** increases the effective optical path length of the light **214** as it passes through the device. In one aspect, the semiconductor layer can be single crystal silicon.

Turning to FIG. **3**, a BSI device is shown **300** having a semiconductor layer **302** coupled to a support substrate **304**, where the semiconductor layer can include one or more doped regions **306**, **308**, that form at least one junction. In this case the support substrate **304** can be a circuitry layer or a bulk substrate including a circuitry layer. A textured layer **310** including an array or plurality of surface features is positioned between the semiconductor layer **302** and the support substrate **304**. Light **312** is shown impinging on the device **300** and passing through the semiconductor layer **302** without contacting any circuit elements that may be positioned in or at the support substrate **304**. Light **312** that is not absorbed by and subsequently passes through the semicon-

ductor layer **302** contacts the textured layer **310** and is redirected back into the semiconductor layer **302**. As with the FSI device shown in FIG. **2**, the textured layer **310** increases the effective optical path length of the light **312** as it passed through the device. In one aspect, the semiconductor layer can be single crystal silicon.

The multiple doped regions for both the FSI and the BSI case can have the same doping profile or different doping profiles, depending on the device. Furthermore, any number or configuration of doped regions is considered to be within the present scope. In some aspects the semiconductor layer can be doped, and thus can be considered to be a doped region.

Additionally, the device can include deep trench isolation (DTI) to isolate the imager and to provide light trapping functionality. In some aspects such a device can include a silicon handle wafer in addition to the support substrate to facilitate manipulation of the device. In some aspects, the support substrate can be a silicon handle wafer. One technique for coupling a silicon handle wafer to the semiconductor layer includes oxide bonding. Further details regarding substrates, bonding, and various imager details can be found in U.S. patent application Ser. No. 13/069,135, which is incorporated herein by reference.

Optoelectronic devices according to aspects of the present disclosure can include photodiodes or pixels that are capable of absorbing electromagnetic radiation within a given wavelength range. Such imagers can be passive pixel sensors (PPS), active pixel sensors (APS), digital pixel sensor imagers (DPS), or the like. Such devices can also be architecturally configured as a three or four transistor active pixel sensor (3T APS or 4T APS). Additionally, devices having greater than 4 transistors are also within the present scope. Such devices can also include pinned photodiode architectures as used in CMOS imagers. Also, such optoelectronic devices can be used in time-of-flight (TOF) applications, as well as various structured light applications. It is also contemplated that such devices can also be configured as rolling shutter or global shutter readout devices.

In some aspects, a device can include a passivation layer positioned between the textured layer and the doped regions. In some aspects, the passivation layer can be doped to create a surface field, as is described more fully below. It is noted, that with or without the passivation region, the textured region can be located on the light incident side of the semiconductor material, on a side of the semiconductor material opposite the light incident side, or both on the light incident side and opposite the light incident side. Additionally, the device can also include an electrical transfer element coupled to the semiconductor layer and operable to transfer an electrical signal from the doped regions. Additionally, an electrical transfer element can include a variety of devices, including without limitation, transistors, sensing nodes, transfer gates, transfer electrodes, and the like.

As has been described, the textured layer is comprised of a plurality of surface features, where such surface features have been formed in an array or other grouping across an interface between the semiconductor layer and the support substrate. In some aspects, the textured region can cover the entire interface between the semiconductor layer and the support substrate, while in other aspects the textured region may cover only a portion of the interface between the semiconductor layer and the support substrate. For example, in one aspect the textured layer can cover the interface between the materials at least in regions where light passing through the semiconductor layer would contact the interface. In another aspect, the textured layer can cover the interface between the materials only in regions where light passing through the semiconductor layer would contact the interface. As such, it should be understood that the coverage area of the textured layer can be dependent on the design of the device, as well as the intended pattern of light trapping and/or light redirection that is desired. It is thus intended that the scope of the present disclosure not necessarily be limited by the degree to which the interface includes textured layer.

Furthermore, in some aspects one or more intervening layers can be present between the semiconductor layer and the support substrate. Such layers can be used to facilitate bonding, for reflecting light, for a variety of other purposes. In one aspect, for example, one or more bonding layers can be utilized to facilitate bonding the support substrate to the semiconductor layer. In such cases, it can be beneficial to apply a first bonding layer to the semiconductor layer and a second bonding layer to the support substrate as a bonding mechanism. The bonding layer can include a material capable of facilitating bonding between the support substrate and the semiconductor layer. Non-limiting examples can include silicon oxides, silicon nitrides, amorphous silicons, and the like. The thickness of a given bonding layer can additionally vary depending on the manufacturing techniques utilized and preferences of the designer. In one aspect, however, a bonding layer can be thick enough to facilitate bonding and thin enough to minimize waveguide effects within the device. In another aspect, a bonding layer can have a thickness of from about 30 nm to about 3 microns. In yet another aspect, a bonding layer can have a thickness of from about 40 nm to about 2 microns.

The position of the textured layer can thus be affected by the nature of the coupling of the support substrate and the semiconductor layer as well as the location where the textured layer is formed. In one aspect, the textured layer can be formed in or on the semiconductor layer. In another aspect, the textured layer can be formed in or on the support substrate. For the situation where the textured layer is formed in or on the semiconductor layer, one or more bonding layers can be coupled between the support substrate and the textured layer. If two or more bonding layers are utilized, a first bonding layer can be formed on the textured layer, a second bonding layer can be formed on the support substrate, and the first and second bonding layers can then be bonded together.

For the situation where the textured layer is formed in or on the support substrate, one or more bonding layers can be coupled between semiconductor layer and the textured layer. For example, in one aspect one or more bonding layer can be coupled between the support substrate and the surface features. If two or more bonding layers are utilized, a first bonding layer can be formed on the textured layer, a second bonding layer can be formed on the semiconductor layer, and the first and second bonding layers can then be bonded together.

As has been described, a light reflector layer can additionally be disposed between any two of the above referenced layers or materials. For example, in one aspect a reflector layer can be applied to one side of the textured layer. In another aspect, a reflector layer can be applied to either side of a bonding layer. In one specific aspect, a reflector layer can be positioned between a first and second bonding layer. The reflector layer can include any material capable of reflecting light back into the semiconductor layer. Non-limiting examples can include metals, ceramics, oxides, glass, distributed Bragg reflector stacks, and the like, including alloys and combinations thereof.

The surface features of the textured layer can be made by any process capable of etching in a repeatable and predictable manner. In one aspect, however, the surface features can be formed by any number of shallow trench isolation (STI) techniques. While such manufacturing techniques are known, they have previously been utilized for creating regions of electrical isolation between circuit elements. Thus, such implementations have been utilized around the peripheries of circuit elements. The present scope, however, is directed to creating arrays of surface features in locations to interact with light. Through this interaction, light can be redirected, diffused, focused, or otherwise manipulated by the surface feature array.

Additionally, STI techniques can be used to form such surface features having a variety of shapes, patterns, and the like. In one aspect, for example, the surface features can be arranged into an array according to a predetermined pattern. In one specific aspect, such a predetermined pattern can be a uniform or substantially uniform grid. Additionally, a predetermined pattern can be an organized, an ordered, or a periodic pattern. In another aspect, the predetermined pattern can be a non-uniform or a substantially non-uniform pattern. Surface feature array patterns can also be disordered, quasi-periodic, random, or the like.

As has been described, the textured layer can function to diffuse light, to redirect light, and to thus increase the quantum efficiency of the device. In some cases, a portion of the light passes through the semiconductor layer to contact the textured layer. The surface features of the textured layer thus facilitate an increase the effective optical path length of the semiconductor layer. Such surface features can be micron-sized and/or nano-sized, and can be any shape or configuration that can be formed via a STI technique. Non-limiting examples of such shapes and configurations include cones, pillars, pyramids, inverted features, trenches, gratings, protrusions, and the like, including combinations thereof. Additionally, factors such as manipulating the feature sizes, dimensions, material type, dopant profiles, texture location, etc. can allow tuning of the textured layer for a specific wavelength or range of wavelengths. In one aspect, tuning the device can allow specific wavelengths or ranges of wavelengths to be absorbed. In another aspect, tuning the device can allow specific wavelengths or ranges of wavelengths to be reduced or eliminated via filtering.

Textured layers according to aspects of the present disclosure can allow a semiconductor layer to experience multiple passes of light within the device, particularly at longer wavelengths (i.e. infrared). Such internal reflection can increases the effective optical path length, thus allowing a material such as silicon to absorb light at thicknesses that are less than standard silicon. As has been described, this increase in the effective optical path length of electromagnetic radiation in silicon increases the quantum efficiency of the device, thus leading to an improved signal to noise ratio.

The materials used for making the textured layer can vary depending on the design and the desired characteristics of the device. As such, any material that can be utilized in the construction of a textured region is considered to be within the present scope. In one aspect, the textured region can be formed directly on the semiconductor layer (e.g. a silicon epi-layer). In another aspect, an additional material can be deposited onto the semiconductor layer to support the formation of the textured layer. Non-limiting examples of such materials include semiconductor materials, dielectric materials, silicon, polysilicon, amorphous silicon, transparent conductive oxides, and the like, including composites and combinations thereof. In one specific aspect, the textured layer can be a textured polysilicon layer. Thus a polysilicon layer can be deposited onto the semiconductor layer, either directly or onto an intermediate passivation layer, and then textured to form the textured region. In another aspect, the textured layer can be a textured dielectric layer. In this case the textured layer can be a portion of a dielectric layer making up a passivation region disposed on the semiconductor layer. In yet another aspect the textured layer can be a transparent conductive oxide or another semiconductor material. In the case of dielectric layers, the textured layer can be a textured portion of a passivation layer or the textured layer can be formed from other dielectric material deposited over a passivation layer.

Various methods can be utilized to form STI features, and any such shallow trench formation technique is considered to be within the present scope. It is noted that, in one aspect, texturing techniques that involve laser ablation are specifically disclaimed from the present scope.

In some cases, the textured layer can be formed by using a patterned mask and photolithography, followed by etching to define a specific structure or pattern. In one aspect, STI techniques can be used to form the textured region. Various STI techniques are contemplated, and any such technique is considered to be within the present scope. In one non-limiting example, an oxide material is deposited on the material to be etched with shallow trenches. A uniform coating of a nitride material is deposited on the oxide material followed by a patterned coating of a resist material to be used as a mask. Thus the pattern of the mask will define the future pattern of the textured region. Any of a number of etch processes can then be applied across the layered material. As a result, regions of the layered material beneath the resist are protected from the etch, while regions of the layered material that are not located beneath the resist are etched by the process. This process is continued to produce a shallow trench (or a hole) etched in the unprotected regions between the resist material through the nitride material, the oxide material, and into the substrate. Following etching of the shallow trench, the resist material can be removed by any appropriate process. It is noted that, while the term "shallow trench" is used to describe the etching process, the resulting etch pattern is not limited to trenches, but also includes holes, pits, cones, and the like.

In some aspects, the etched regions can be left as open spaces. In other aspects, further processing can be performed to fill in the etched regions. For example, an oxide material can be deposited along the sides and bottom of the trenches similar to an oxide liner. Such can be deposited by a thermal oxide process, a direct oxide deposition, or any other useful process. Once the etched regions are sufficiently filled, the resulting surface can be further processed by techniques such as CMP processing, and then, once exposed, the nitride layer can be removed.

In another aspect, the etched regions can be highly doped along sidewalls and/or bottoms with a dopant profile to create a surface field. A back surface field can function to impede the movement of photo-generated carriers from the junction toward the textured layer, and as such the dopant profile should be designed accordingly. The use of the back surface field in the etched regions can thus be used to electrically passivate the regions around the textured layer.

The surface features can have a variety of configurations, structures, and sizes, depending on the desired characteristics of the resulting device. In one aspect, as is shown in FIG. **4** for example, surface features **402** are shown formed in a material layer **404**, such as, for example, the semiconductor layer. The surface features in this case are arranged uni-

formly as a uniform grid pattern comprised of a series of spaces or holes **406** and lines **408** or pillars. Various uniform grid patterns are contemplated, and in one aspect the pattern can include a uniformly spaced series pillars surrounded by spaces, or vice versa depending on whether the pattern is viewed from the topside or the bottom side of the etched material. In another aspect, the uniform grid pattern can include a series of lines surrounding a uniformly spaced series of spaces or holes cut between the lines, or vice versa.

Additionally, as has been described, the etch pattern of surface features can be a predetermined nonuniform pattern. As is shown in FIG. **5**, for example, the spaces **506** etched into the material layer **504** are of approximately the same size and shape and the lines or pillars **508** vary in width. FIG. **6** shows an etch pattern were both the spaces **606** and the lines or pillars **608** are varied. It should be noted that a variety of etch patterns are contemplated, and that the present scope should not be limited thereby. With respect to nonuniform patterns, in some aspects the patterns can be random, either for the line or pillar, the spaces, or both.

In addition to the pattern formed by the STI process, the depth of the etch can also have an impact on optical absorption. In one aspect, for example, the surface features can have a uniform or substantially uniform depth or height. While the depth or height can vary depending on the intended use and design of the device, in one aspect the height or depth can be from about 50 nm to about 2 microns. It is noted that, in standard STI processes, the processing depth is about 0.35 microns, which is also considered to be within the present scope. In another aspect, the surface features can have a non-uniform depth or height, and thus can vary across the surface of the textured layer. Such variation in depth can be random in some cases, and nonrandom in other cases depending on the desired design of the device. In one aspect, the depth or height can be from about 50 nm to about 2 microns. In some aspects discrete levels of depths can be utilized. For example, in one aspect one level may have a depth of 0.35 microns, while another level may have a depth of 0.7 microns. By using different masks, different depth levels can be achieved. Similarly, subsequent levels can be etched to create a third level, a fourth level, or more. It is noted that in some aspects each level can have a depth of from about 50 nm to about 2 microns.

As has been described, the various devices according to aspects of the present disclosure can exhibit increased absorption as compared to traditional photosensitive devices. For example, for an active semiconductor layer according to aspects of the present disclosure that has a thickness of from about 1 micron to about 10 microns, the absorption characteristics can be as follows: in one aspect the semiconductor layer can absorb from about 60% to about 80% of incident 700 nm light; in another aspect, the semiconductor layer can absorb from about 40% to about 60% of incident 850 nm light; in yet another aspect, the semiconductor layer can absorb from about 25% to about 40% of incident 940 nm light; in a further aspect, the semiconductor layer can absorb from about 15% to about 30% of incident 1000 nm light; and in yet a further aspect, the semiconductor layer can absorb from about 5% to about 10% of incident 1064 nm light. Furthermore, depending on the architecture, devices according to aspects of the present disclosure can exhibit external quantum efficiencies (EQE) that are from about 1% to about 5% less than the above described absorption values for a given wavelength of light. Additionally, it is further noted that the devices of the present disclosure have at least substantially the same dark current as a standard EPI device with no textured region.

While the present disclosure has focused on silicon materials, it should be understood that a variety of semiconductor materials are also contemplated for use and should be considered to be within the present scope. Non-limiting examples of such semiconductor materials can include group IV materials, compounds and alloys comprised of materials from groups II and VI, compounds and alloys comprised of materials from groups III and V, and combinations thereof. More specifically, exemplary group IV materials can include silicon, carbon (e.g. diamond), germanium, and combinations thereof. Various exemplary combinations of group IV materials can include silicon carbide (SiC) and silicon germanium (SiGe). In one specific aspect, the semiconductor material can be or include silicon. Exemplary silicon materials can include amorphous silicon (a-Si), microcrystalline silicon, multicrystalline silicon, and monocrystalline silicon, as well as other crystal types. In another aspect, the semiconductor material can include at least one of silicon, carbon, germanium, aluminum nitride, gallium nitride, indium gallium arsenide, aluminum gallium arsenide, and combinations thereof. In yet another aspect, the semiconductor materials can include any material that is useful for making imagers, including, Si, SiGe, InGaAs, and the like, including combinations thereof.

A silicon semiconductor layer can be of any thickness that allows electromagnetic radiation detection and conversion functionality, and thus any such thickness of silicon material is considered to be within the present scope. In some aspects the textured layer increases the efficiency of the device such that the silicon material can be thinner than has previously been possible. Decreasing the thickness of the silicon material reduces the amount of silicon required to make such a device. In one aspect, for example, the silicon material has a thickness of from about 500 nm to about 50 μm. In another aspect, the silicon material has a thickness of less than or equal to about 100 μm. In yet another aspect, the silicon material has a thickness of from about 1 μm to about 10 μm. In a further aspect, the silicon material can have a thickness of from about 5 μm to about 50 μm. In yet a further aspect, the silicon material can have a thickness of from about 5 μm to about 10 μm.

A variety of dopant materials are contemplated for both the formation of the multiple doped regions and to create a surface field at the shallow trench regions, and any such dopant that can be used in such processes is considered to be within the present scope. It should be noted that the particular dopant utilized can vary depending on the material being doped, as well as the intended use of the resulting material.

A dopant can be either charge donating or accepting dopant species. More specifically, an electron donating or a hole donating species can cause a region to become more positive or negative in polarity as compared to the semiconductor layer. In one aspect, for example, the doped region can be p-doped. In another aspect the doped region can be n-doped. A highly doped region can also be formed on or near the doped region to create a pinned diode. In one non-limiting example, the semiconductor layer can be negative in polarity, and a doped region and a highly doped region can be doped with p+ and n dopants respectively. In some aspects, variations of n(−−), n(−), n(+), n(++), p(−−), p(−), p(+), or p(++) type doping of the regions can be used. In one aspect, non-limiting examples of dopant materials can include S, F, B, P, N, As, Se, Te, Ge, Ar, Ga, In, Sb, and combinations thereof.

What is claimed is:

1. An optoelectronic device having enhanced absorption of electromagnetic radiation, comprising:

a semiconductor layer having a light incident side and an opposed side, said semiconductor layer having multiple doped regions forming at least one junction,

a textured region comprising a plurality of shallow trench isolation surface features located on the light incident side of the semiconductor layer and configured to interact with incident electromagnetic radiation,

a support substrate coupled to said semiconductor layer, and

a first bonding layer disposed between the semiconductor layer and the support substrate,

wherein said optoelectronic device is a photosensitive imager device capable of detecting visible and infrared electromagnetic radiation.

2. The device of claim 1, wherein the semiconductor layer is single crystal silicon.

3. The device of claim 1, wherein the shallow trench isolation surface features are formed in the semiconductor layer.

4. The device of claim 1, wherein the shallow trench isolation surface features have a substantially uniform height.

5. The device of claim 1, wherein the shallow trench isolation surface features are not uniform in height.

6. The device of claim 1, further comprising a device layer coupled to the semiconductor layer on said side opposed to the light incident side.

7. The device of claim 1, wherein said first bonding layer comprises any of silicon oxide, silicon nitride and amorphous silicon.

8. The device of claim 1, wherein said semiconductor layer has a thickness in a range of about 1 micron to about 10 microns.

9. The device of claim 1, wherein said bonding layer has a thickness in a range of about 30 nm to about 3 microns.

10. The device of claim 1, wherein said bonding layer has a thickness in a range of about 40 nm to about 2 microns.

11. The device of claim 1, wherein said plurality of shallow trench isolation surface features have a height in a range of about 50 nm to about 20 microns.

12. The device of claim 1, wherein said shallow trench isolation surface features comprise pyramids.

13. The device of claim 1, wherein said plurality of shallow trench isolation surface features are formed by using a patterned mask and photolithography followed by etching.

14. The device of claim 1, wherein said plurality of shallow trench isolation surface features comprise multiple etched levels.

15. The device of claim 1, wherein said textured region enhances absorption of electromagnetic radiation within said semiconductor layer.

16. The device of claim 1, wherein said textured region increases optical absorption of the semiconductor layer over an electromagnetic spectrum range of at least about 700 nm to about 1100 nm.

17. The device of claim 1, wherein said textured region increases effective optical path length of light as it passes through the semiconductor layer.

18. The device of claim 1, wherein said textured region allows the semiconductor layer to experience multiple passes of light.

19. The device of claim 1, further comprising a second bonding layer positioned between the first bonding layer and the support substrate.

20. The device of claim 19, further comprising a reflector layer disposed between the first bonding layer and the second bonding layer.

21. The device of claim 1, wherein the shallow trench isolation surface features are arranged according to a pattern.

22. The device of claim 21, wherein the pattern is an at least substantially uniform grid.

23. The device of claim 21, wherein the pattern is a non-uniform arrangement.

24. A method of making an optoelectronic device, comprising:

bonding a semiconductor layer to a support substrate, wherein bonding the semiconductor layer to the support substrate includes:

depositing a first bonding layer onto the semiconductor layer; and

bonding the first bonding layer to a second bonding layer disposed on the support substrate; and

creating a plurality of shallow trench isolation surface features on a light incident side of said semiconductor layer.

25. The method of claim 24, wherein the step of creating the plurality of shallow trench isolation surface features comprises generating an array of surface features using shallow trench isolation etching.

26. The device of claim 1, further comprising deep trench isolation for isolating the device.

27. The device of claim 26, wherein said deep trench isolation provides light trapping functionality.

28. An optoelectronic device having enhanced absorption of electromagnetic radiation, comprising:

a semiconductor layer having a light incident side and an opposed side, said semiconductor layer having multiple doped regions forming at least one junction,

a textured region comprising a plurality of shallow trench isolation surface features located on the light incident side of the semiconductor layer and configured to interact with incident electromagnetic radiation,

a support substrate coupled to said semiconductor layer, and

a first bonding layer disposed between the semiconductor layer and the support substrate,

a second bonding layer positioned between the first bonding layer and the support substrate, and

a reflector layer disposed between the first bonding layer and the second bonding layer.

29. The device of claim 28, wherein said shallow trench isolation surface features comprise pyramids.

30. The device of claim 28, wherein said plurality of shallow trench isolation surface features are formed by using a patterned mask and photolithography followed by etching.

31. The device of claim 28, wherein said semiconductor layer has a thickness in a range of about 1 micron to about 10 microns.

32. The device of claim 28, wherein the shallow trench isolation surface features have a substantially uniform height.

33. The device of claim 28, wherein the shallow trench isolation surface features are not uniform in height.

34. The device of claim 28, wherein said plurality of shallow trench isolation surface features have a height in a range of about 50 nm to about 20 microns.

35. The device of claim 28, wherein said photosensitive imager device is capable of detecting visible and infrared electromagnetic radiation.

36. The device of claim **28**, wherein said textured region enhances absorption of electromagnetic radiation within said semiconductor layer.

37. The device of claim **28**, wherein said textured region increases optical absorption of the semiconductor layer over an electromagnetic spectrum range of at least about 700 nm to about 1100 nm.

38. The device of claim **28**, wherein said textured region increases effective optical path length of light as it passes through the semiconductor layer.

39. The device of claim **28**, wherein said textured region allows the semiconductor layer to experience multiple passes of light.

40. The device of claim **28**, further comprising deep trench isolation for isolating the device.

41. The device of claim **40**, wherein said deep trench isolation provides light trapping functionality.

42. The device of claim **28**, wherein the shallow trench isolation surface features are arranged according to a pattern.

43. The device of claim **42**, wherein the pattern is an at least substantially uniform grid.

44. The device of claim **42**, wherein the pattern is a non-uniform arrangement.

* * * * *