PUMPING MANUAL
International

Handbook of PUMPS AND PUMPING

Brian Nesbitt

LIBERTY EXHIBIT 1014, Page 1

PUMPING MANUAL
International

Handbook of Pumps and Pumping

Edited by

Brian Nesbitt

Elsevier
Linacre House, Jordan Hill, Oxford OX2 8DP, UK
30 Corporate Drive, Suite 400, Burlington, MA 01803, USA

First edition 2006

Copyright © Roles & Associates Ltd All rights reserved

No part of this publication may be reproduced, stored in a retrieval system or transmitted in any form or by any means electronic, mechanical, photocopying, recording or otherwise without the prior written permission of the publisher

Permissions may be sought directly from Elsevier's Science & Technology Rights Department in Oxford, UK: phone (+44) (0) 1865 843830; fax (+44) (0) 1865 853333; email: permissions@elsevier.com. Alternatively you can submit your request online by visiting the Elsevier web site at http://elsevier.com/locate/permissions, and selecting *Obtaining permission to use Elsevier material*

The information contained in this publication has been derived from many sources and is believed to be accurate at the time of publication. Opinions expressed are those of the editor and contributors and any recommendations contained herein do not necessarily represent the only methods or procedures appropriate for the situations discussed, but are rather intended to present consensus opinions and practices of the pump industry which may be helpful or of interest to those who design, test, install, operate or maintain pumps and pump systems. The publishers therefore disclaim any and all warranties, expressed or implied, regarding the accuracy of the information contained in this publication and further disclaim any liability for the use or misuse of this information. The publishers do not guarantee, certify or assure the performance of any pump/pump system designed, tested, installed, operated or maintained on the basis of the information contained within this publication.

No responsibility is assumed by the publisher or the editor for any injury and/or damage to persons or property as a matter of products liability, negligence or otherwise, or from any use or operation of any methods, products, instructions or ideas in the material herein.

ISBN–13: 978-1-85617-476-3
ISBN–10: 1-85617-476-X

Printed and bound in Great Britain

Published by Elsevier in association with Roles & Associates Ltd

ELSEVIER

ROLES & associates

Amsterdam Boston Heidelberg London New York Oxford
Paris San Diego San Francisco Singapore Tokyo

This book belongs to Robert Durham

(rdurham@thewaylabs.com)

Copyright Elsevier 2024

ALLWEILER

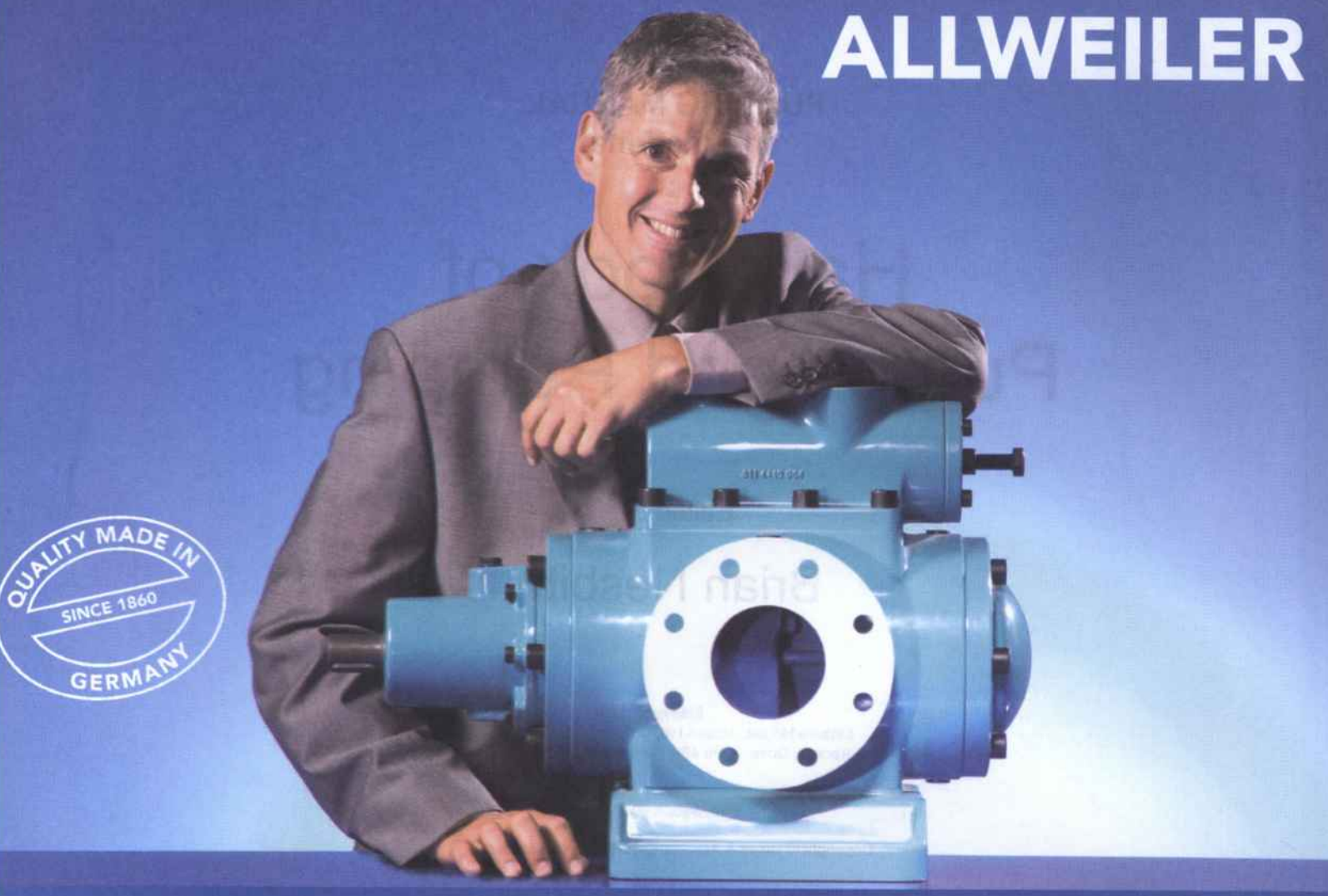

How to Get the Best Pump?
Call ALLWEILER.

- Phone +49 (0)7732 86-0
- Fax +49 (0)7732 86-436
- E-mail service@allweiler.de

The only manufacturer with a complete selection of Centrifugal, Screw, Progressing Cavity, Rotary Lobe, Propeller, Gear, Peristaltic Pumps and Macerators.

PUMP CONVENTION TCO 2006

"Minimise Total Costs of Ownership"
October, 12 2006
www.allweiler.de/convention2006

Convention Topics in 2007 and 2008:
Check www.allweiler.de

ALLWEILER AG
PO Box 11 40
78301 Radolfzell • Germany
Tel. +49 (0)7732 86-0
Fax +49 (0)7732 86-436
E-mail: service@allweiler.de
Internet: http://www.allweiler.com

ALLWEILER
A Colfax Business Unit

Foreword

Today, pumps and their associated systems play a central role in all process operations in the energy sector worldwide. These include oil, gas, petrochemical, chemical, power generation and water, together with industries such as food processing, pharmaceutical, steel, paper, agriculture and many others.

U.S. Department of Energy studies indicate that pumping systems account for nearly 20% of the world's electrical energy demand and can range from 25% to 50% of the energy usage in certain industrial plant operations. Rising costs, unease over the security of energy supplies and environmental concerns add to the pressures to optimise pumping systems, which can represent a real opportunity for companies and utilities to save money and energy, while reducing maintenance costs and increasing productivity.

One consulting group has estimated the current global market for liquid pumps to be $22 billion, growing over the next ten years by around 3% per annum. Western European and North American manufacturers can expect to see the breakneck growth of China's economy, with its lower manufacturing costs, influencing market share during the same period.

One tangible effect of this shift will be to accelerate outsourcing strategies in the West, either by seeking more low-cost parts or by own-branding of complementary pumps from other manufacturers. Global price pressures will continue intensifying.

Pumping Manual International is therefore a welcome aid to all pump users. By combining, in one convenient volume, chapters on pump types, basic flow theory, and pump applications, as well as ancillary equipment and services and a buyers' guide, users can find sensible and practical information to help them in making informed purchasing decisions. This is not simply another textbook on pumps.

Ian Leitch

Commercial Director

Energy Industries Council
(London, Aberdeen, Gateshead, Houston, Singapore, Dubai, Rio de Janeiro and Macae)

LIBERTY EXHIBIT 1014, Page 5

This book belongs to Robert Durham (rdurham@thewaylabs.com)

Copyright Elsevier 2024

When it comes to solids, we can handle it

Toyo is the world leader in heavy duty slurry pumps with agitator.
Toyo submersible, vertical and horizontal pumps offer effective pumping solutions for abrasive slurries.
Toyo is renowned for quality equipment that can get the job done where other fail to perform.

Manufacturer: Toyo Denki Industrial Co. Ltd, 7-10 Norimatsu 1-Chome,
Yahatanishi-Ku, Kitakyushu-City, Fukuoka 807-0831 Japan
Phone: +81.93.691.2731 • Fax: +81.93.691.2728
E-mail: info@toyopump.co.jp • Website: http://www.toyopump.co.jp

Distribution: Toyo Pumps Europe (Europe, Middle-East and Africa)
E-mail: info@toyopumpseurope.com • Website: http://www.toyopumpseurope.com

Toyo Pumps North America (Canada, United-States and South America)
E-mail: info@toyopumps.com • Website: http://www.toyopumps.com

Toyo

This work belongs to Robert Durham (rdurham@thewaylabs.com)
Copyright Elsevier 2024

The editor

Brian Nesbitt is a highly respected consultant specialising in pump and valve technology. He works with pump manufacturers, equipment manufacturers, pump users and others who require specialist assistance. Brian regularly publishes articles, presents papers, conducts seminars and workshops, and undertakes work for industry ranging from theoretical research projects and equipment design studies, pump duty evaluations, to site visits to investigate problem pumps, valves, or problem systems. As a pump designer, with experience from 10 to 2048 barg he is admirably suitable to discuss all aspects of pumps and pumping.

He is the current chairman of the British Standard MCE/6/6 and European CEN/TC197/SC5 subcommittees which have formulated the draft European Standards for rotary and reciprocating pd pumps and is the UK Principal Technical Expert to ISO/TC 67/SC6 Joint Working Group 2 for 'Oil & Gas' reciprocating pumps. Brian was one of the UK delegates on the API task-force looking at modifications for the 3rd edition of API 674 and its conversion to ISO 13710.

Brian Nesbitt's working career began as a technical apprentice in the turbo-generator division of CA Parsons, gaining hands-on experience of building machines up to 500 MW. From the shop floor, his promotion led to periods in drawing and design offices working on rotary and reciprocating compressors and gas turbines. Large rotary compressors included gas circulators for nuclear reactors. Many machines included specially designed ancillary systems and complicated lube and seal oil systems. Mechanical seals were designed for specific compressor applications. Machine installation and interconnection was an important feature on some contracts. Process piping was considered during machine design.

A brief spell in industrial refrigeration, with reciprocating and screw compressors and considerable system design and site/installation exposure, was followed by an introduction to pumps at Ingersoll-Rand where he worked until 1985. Brian was recruited to provide engineering and application support for reciprocating pumps manufactured within Europe. Conversion from reciprocating compressors to reciprocating pumps was accomplished by an extended visit to the 'parent' factory in the USA. During this time, Brian assisted with ongoing design work on current contracts, including critical components on a batch of 2.0 MW pumps.

Once settled in the UK, Brian provided guidance to Sales for pump selection and choice of accessories and visited potential customers to discuss applications. Special pump designs were implemented for duties unsuitable for standard pumps. Emphasis was directed towards easier maintenance, low NPIPr, high pressure, high viscosity and solids handling applications. New valve designs were produced for arduous applications. North Sea pump applications and associated quality requirements proved to be a great source of development.

Many pumps required special ancillary systems for the crankcase and the stuffing boxes. On-skid process pipework featured on a considerable number of pumps where multiple pumps were assembled to create a single unit. Close liaison with the test department was essential to ensure test rigs were capable of providing the required accuracy for a wide range of operating conditions. Brian was very fortunate in that the test department had an enviable range of equipment and facilities available, together with very experienced staff. Extensive tests were conducted, in parallel with contractual tests, to explore the capabilities of the pump ranges. Novel rig designs were developed to cope with unusual operating conditions.

Brian also provided support for the after-sales departments with site visits to advise on pump and system operational problems. Exposure to complicated system problems, such as acoustic resonance, provided opportunities to work with consultants developing leading-edge technologies and investigation methodologies.

While at Ingersoll-Rand, he was surrounded by some of the world's most eminent rotodynamic pump specialists and met lots of others who visited the plant regularly. Although not knowing everything about pumps, Brian does know who will know the answer to those insoluble problems!

This book belongs to Robert Durham (rdurham@thewaylabs.com)
Copyright Elsevier 2024

PCA ENGINEERS
Engineering Consultants

VistaCPD
Centrifugal Pump Design

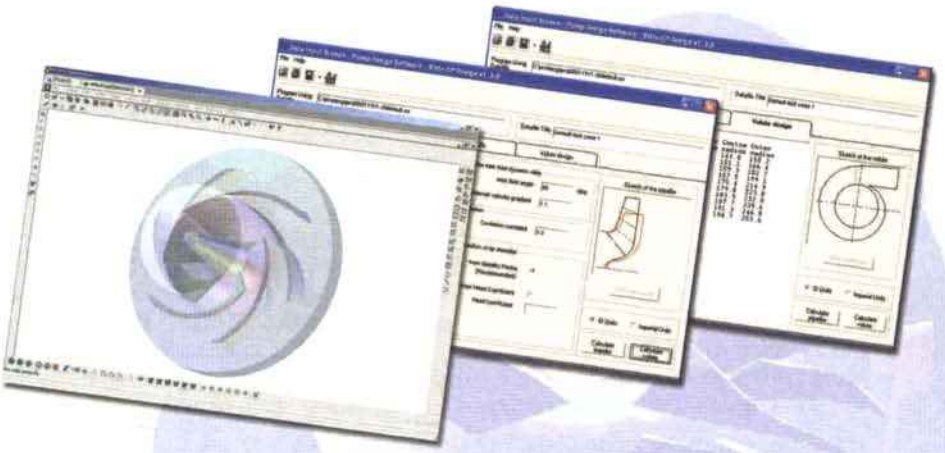

Meanline design of pumps linking into ANSYS® BladeModeler™

A reliable blend of empiricism and industry-leading turbomachinery design tools for accuracy, productivity and performance.

© 2006 ANSYS Inc. All rights reserved. Reproduced with permission. ANSYS® BladeModeler™, ANSYS® Workbench™ and all other ANSYS, Inc. product names are trademarks or registered trademarks of ANSYS, Inc. or its subsidiaries in the United States or other countries. For more information see www.ansys.com.

t: + 44 1522 530106

www.pcaeng.co.uk

Technology

Morgan AM&T is a World Leader in Advanced Materials Technology. Morgan AM&T offers tribological and specialty carbon materials with an unrivalled combination of properties and performance to meet your most demanding applications. With decades of engineering application experience, the Morgan AM&T group of companies have the capability to precisely identify and supply the best materials for your applications. The Morgan AM&T Research and Development laboratories and testing facilities are unmatched in the industry.

Products

Morgan AM&T provides you with reliable, large scale manufacturing of carbon graphite, graphite, Purebide®, silicon carbide, and Graflon® filled PTFE components. In over 40 countries around the world, our manufacturing, sales, and distribution facilities ensure you a steady, dependable supply of high quality products.

Service

Morgan AM&T is the standard of excellence in advanced materials with proven performance, unsurpassed quality and consistency. From over 50 locations in 40 countries Morgan AM&T personnel are ready to provide you with complete sales, engineering and applications support.

Morgan AM&T Is the Global Company with Local Service

MORGAN AM&T

The Americas
441 Hall Ave
St. Marys, PA 15857 USA
Telephone +1 814 781 1573

Europe
Quay Lane, Gosport
Hampshire PO12 4LJ U.K.
Telephone +44(0) 1705 501311

Astral Asia
9 Harbord Street, Granville
NSW 2142 Australia
Telephone +61 2 9897 3622

This book belongs to Robert Durham (rdurham@thewaylabs.com)

Copyright Elsevier 2024

Using this book

Written specifically as a practical reference book for pump users, *Pumping Manual International* is intended to provide useful information about the outline design, selection and installation of pumps and how these affect performance. *Pumping Manual International* is not intended to be just 'another' textbook on pumps and pumping; rather it seeks to address the problems that exist at the interface between pump manufacturers and users. It has been compiled with the help of and benefit from the practical experience of pump users; it is aimed at everyone who has technical problems as well as these wanting to know who supplies what, and from where.

Pumping Manual International can be used in a variety of ways depending on the information required. For specific problems it is probably best used as a reference book. The detailed Contents section at the front of the book, combined with the Index at the end, will simplify finding the appropriate topic. The 'Useful references' at the end of most Chapters also provide helpful guidance, useful information and suggestions for further reading.

As a textbook though, *Pumping Manual International* may be read from cover to cover to obtain a comprehensive understanding of the subject. Of course, individual Chapters may be studied separately.

Chapter 1 is devoted to the main pump types, grouped into Rotodynamic, Positive displacement and Other types. If the user is unfamiliar with the concepts of 'rotodynamic' and 'positive displacement', then Chapter should be reviewed before Chapter 1 is examined. Which concept is better for a particular application should be known before reading Chapter 1.

The properties of liquids and liquid flow are discussed in the early Chapters. The book then follows a logical pattern with Chapters 5 to 10 covering topics such as: pumps and piping systems, flow regulation, materials, seals and sealing, shaft couplings and electric motors. Ancillary products and services are also discussed as well. Testing and quality assurance is dealt with in Chapter 12. Chapters 13 to 15 are devoted to installation, commissioning and maintenance as well as pump efficiency and economics and selection.

Chapter 16 provides details of a number of interesting pump applications that illustrate some of the problems encountered in the practical use of pumps and how these have been solved. This Chapter embraces a number of pump designs and uses, showing some of the diverse uses for pumps outside the more traditional areas. Solutions to some of the more commonly-encountered pump usage problems are however also given.

Chapter 17 gives useful guidance and information on many pump standards and important units and conversions used in pump technology.

The Buyers' Guide summarises the various pump types, divided into the three groups: Rotodynamic, Positive displacement and Other types. The Guide has been categorised in such a way to impose boundary limits on pump types and the operating conditions available, with the aim of simplifying the choice of supplier from the user's point of view.

The Buyers' Guide covers all pump types, followed by ancillary products and services. Trade names are comprehensively listed too. It is preceded by the names and addresses and contact details of all companies appearing in the Guide. They are listed alphabetically, by country.

It is strongly recommended that direct contact with the relevant companies is made to ensure that their details are clarified wherever necessary.

LIBERTY EXHIBIT 1014, Page 9

This book belongs to Robert Durham (rdurham@thewaylabs.com)

Copyright Elsevier 2024

BE > THINK > INNOVATE >

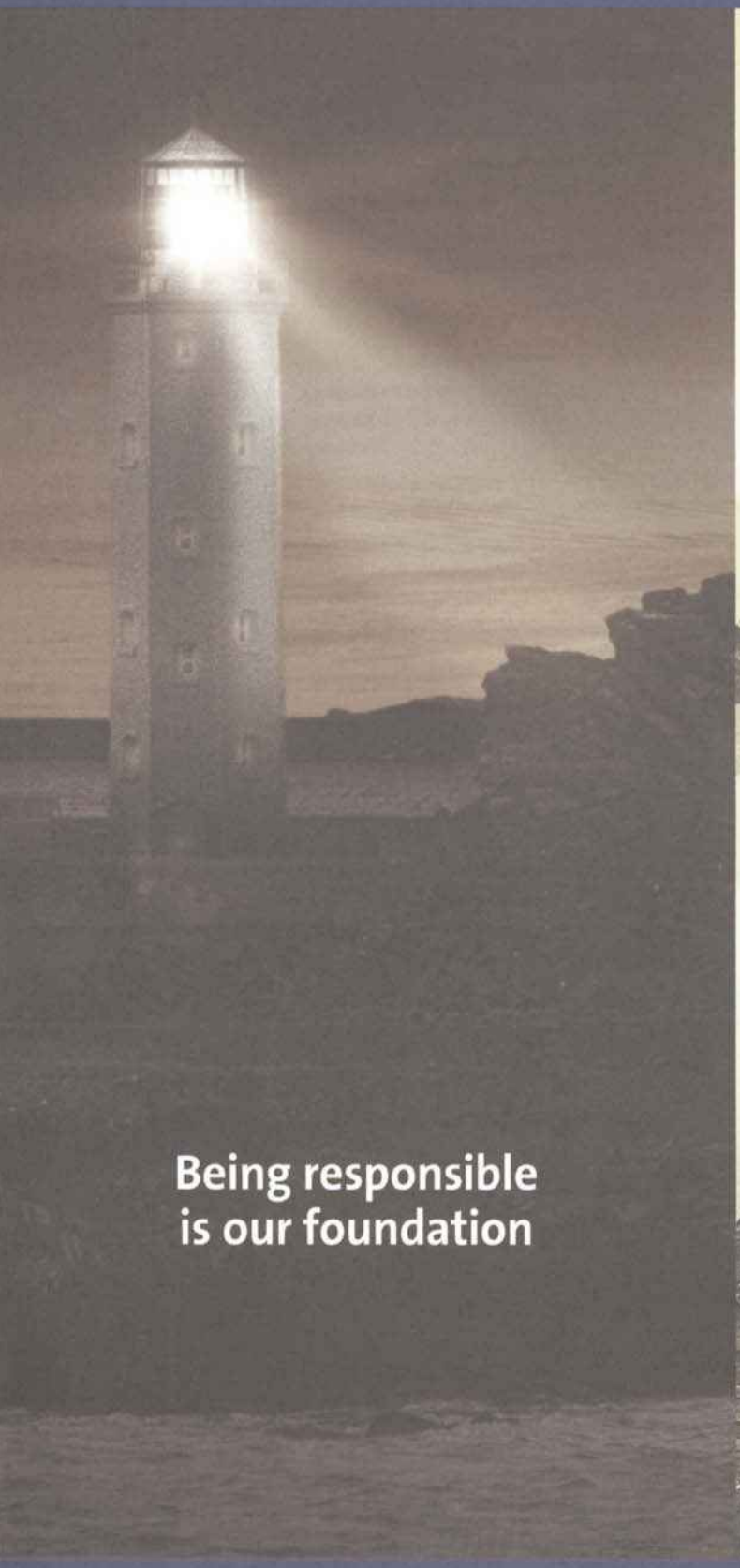

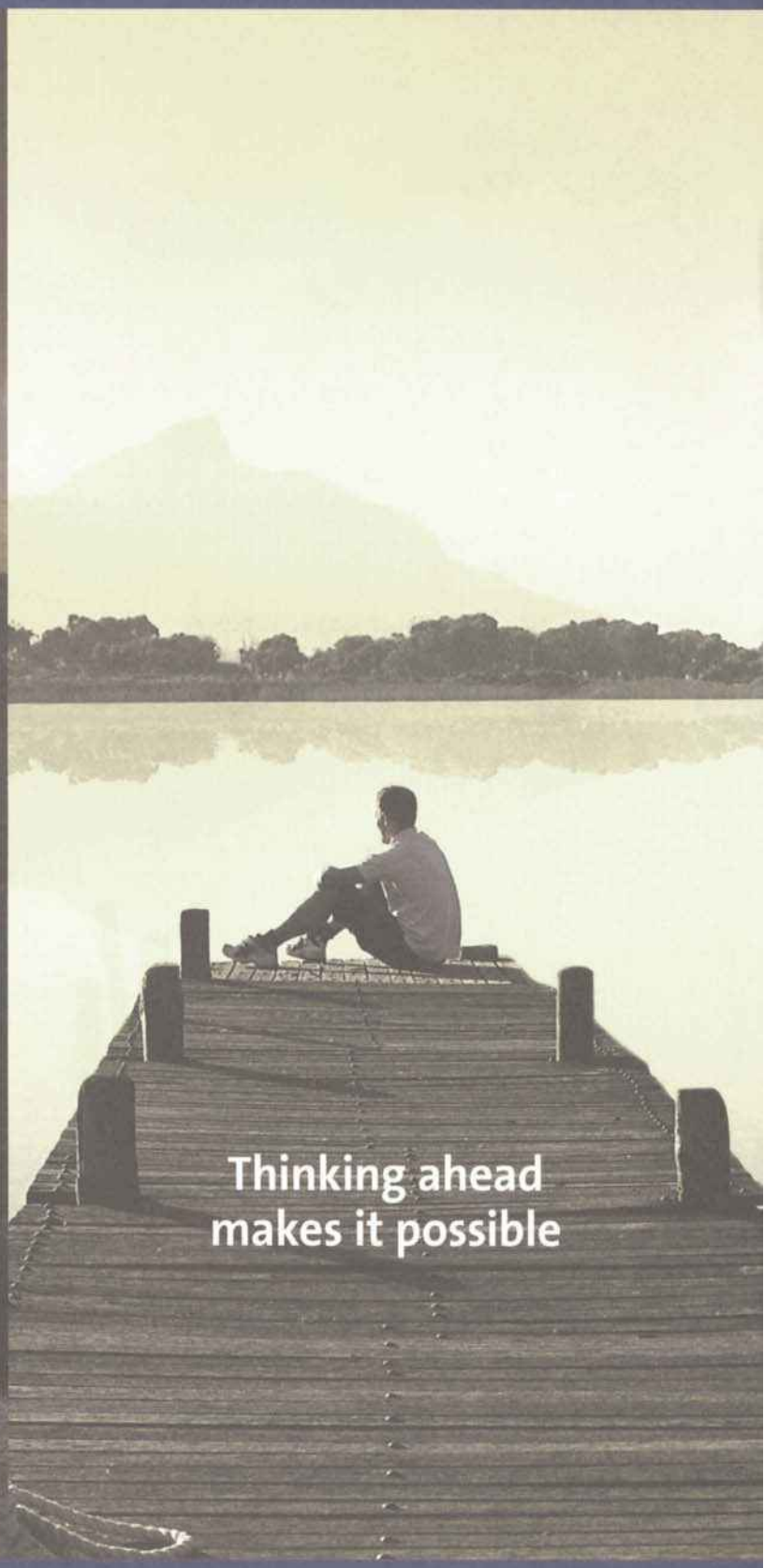

Pump technology based on values

At Grundfos, we encapsulate our core values with the words: Be responsible – Think ahead – Innovate.
They express our commitment to bringing you the best pumping solutions in the world through foresight, innovation, and scrupulous business ethics.

With these values in mind, we have created a complete portfolio of superior pump technology. Every product bears Grundfos' hallmarks including – quality, reliability, and durability. To see for yourself, please visit www.grundfos.com or contact your local Grundfos company.

LIBERTY EXHIBIT 1014 Page 10

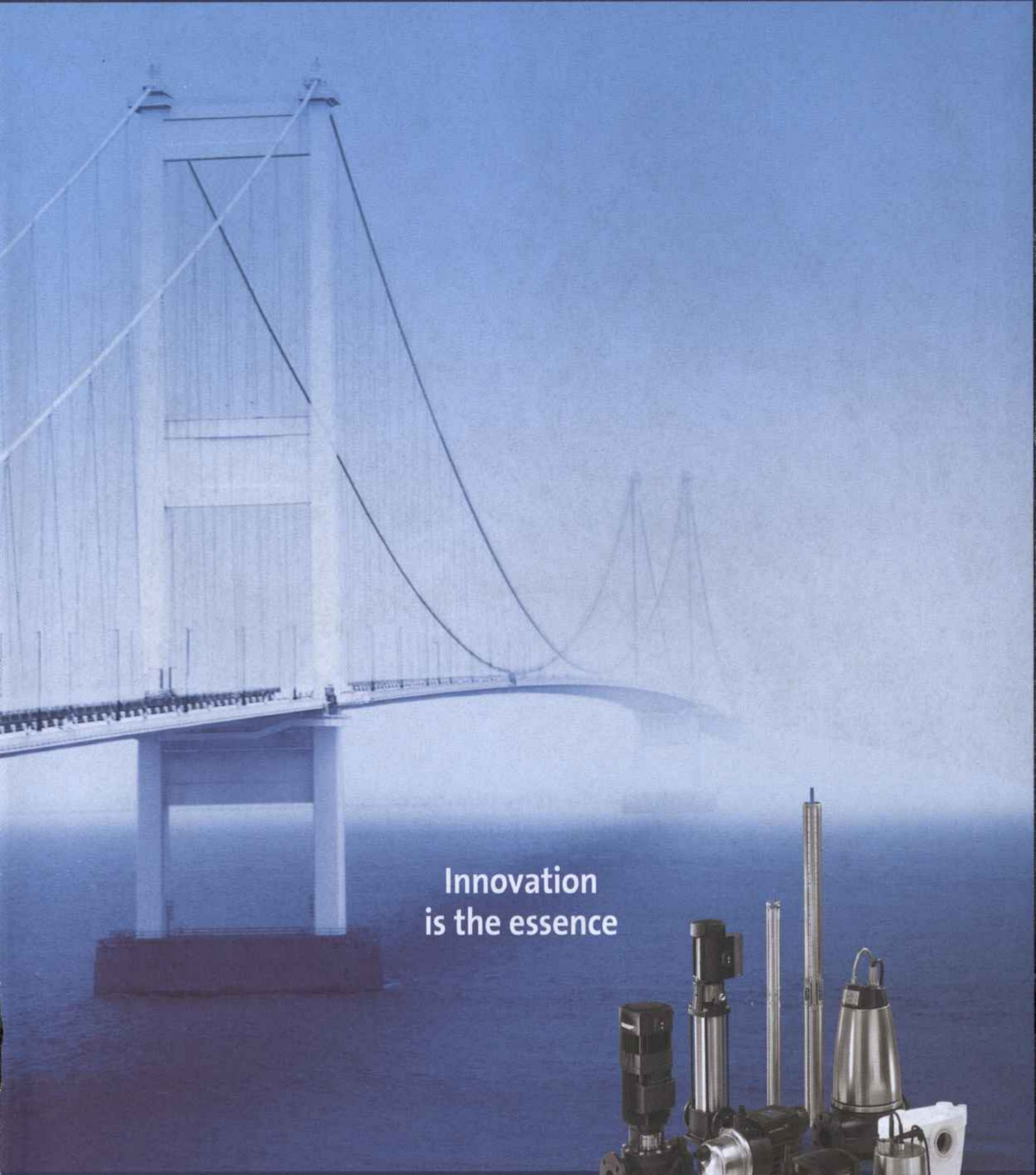

GRUNDFOS

LIBERTY EXHIBIT 1014, Page 11

This book belongs to Robert Durham (rdurham@thewaylabs.com)

Copyright Elsevier 2024

Metso slurry pumps for all abrasive industrial applications

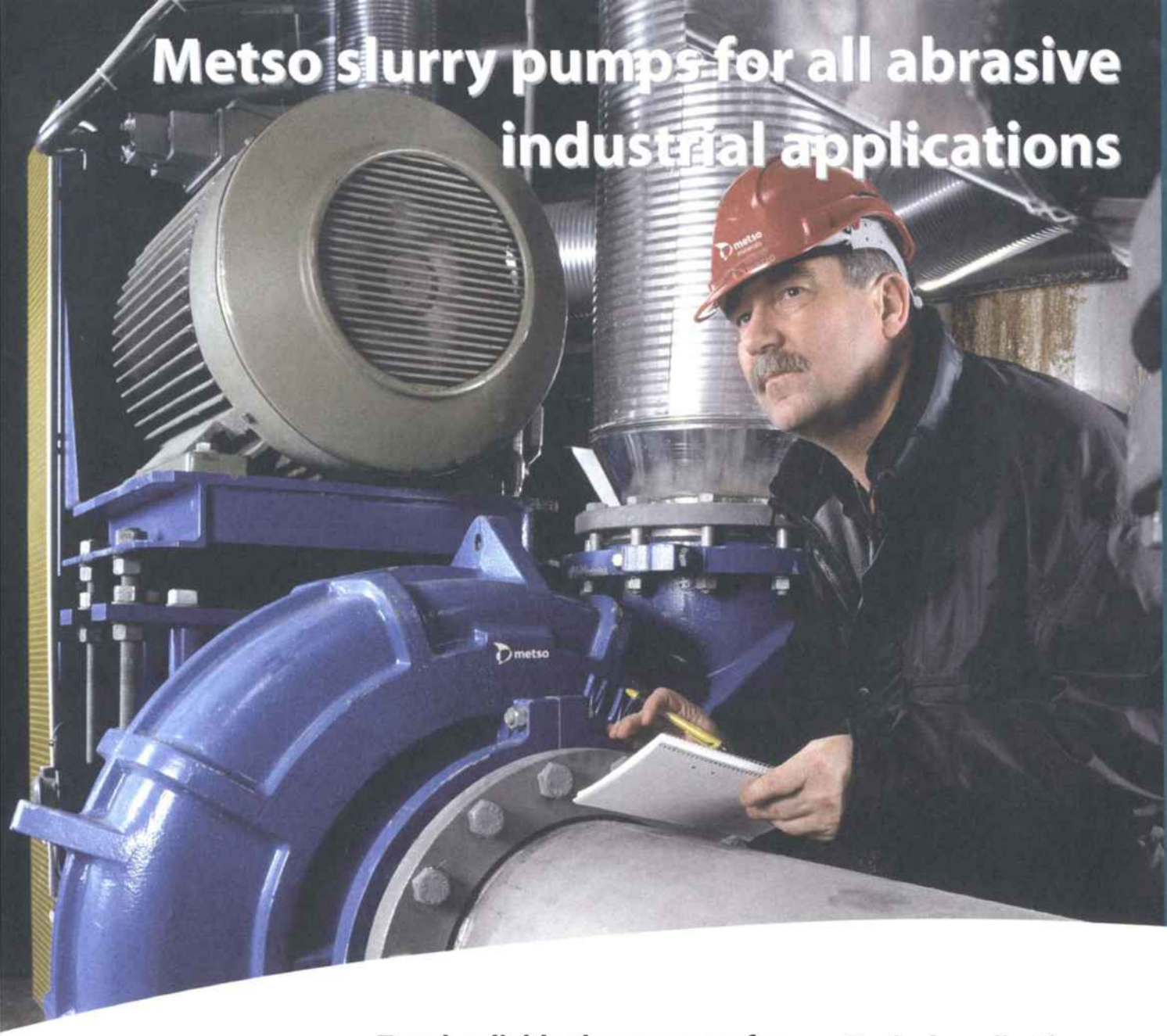

www.metsominerals.com/pumps

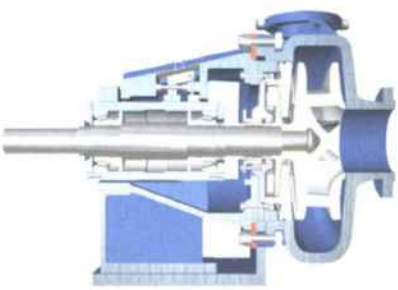

The Orion Series of Heavy and Mining Duty Hard Metal and Rubber Lined Pumps

The Sala Series of Vertical Sump Pumps

The Sala Series of Vertical Tank Pumps

Tough reliable slurry pumps for abrasive duties and unreliable environments

The Orion series of Heavy and Mining duty, H- and M-range, horizontal slurry pumps are available both in rubber lined and in high chromium hard metal versions.
Rubber lining gives the pumps excellent protection against both abrasion and corrosion, which makes them ideal for many applications in heavy duty minerals based chemical industries.

The excellent hydraulic design guarantees maximum efficiency throughout the life of the generously proportioned wear parts.

The Sala series of Vertical Sump pumps are strong, tough and the most reliable sump pumps on the market.
The robust cantilever design without any submerged bearings or shaft seals, has long since established this range as an industrial standard in minerals processing.

The Sala series of Vertical Tank pumps are designed for abrasive slurry service and feature simple maintenance and robust construction. The ingenious design of the pump and the lack of shaft seal makes it exceptionally service friendly and easy to install.

Typical applications:

- Minerals processing
- Drilling mud and cuttings
- Mill scale handling in steel-works
- Paper coating (PCC) pumping
- Ash handling in power plants
- General sump duties

For further information please contact:
Metso Minerals (Sala) AB
SE-733 25 Sala, Sweden.
Phone: +46 224 374 00.
e-mail: minerals.info@metso.com

metso minerals
linking innovations™

LIBERTY EXHIBIT 1014, Page 12

This book belongs to Robert Durham (rdurham@thewaylabs.com)

Copyright Elsevier 2024

Contents

1 Pump types 1

1.1 Introduction 3

1.2 Checklist of pump terminology and definitions 3

1.3 Rotodynamic pumps 4

1.3.1 Small centrifugal pumps for domestic water/ heating/sanitation applications 4

1.3.2 Domestic water supply pump packages 5

1.3.3 Small centrifugal pumps for machine tool cutting oil applications 6

1.3.4 Horizontal single-stage end-suction overhung impeller centrifugal pumps (for general purposes includes fixed irrigation pumps, EN 733 pumps) 6

1.3.5 Horizontal single-stage end-suction overhung impeller centrifugal pumps (for chemical applications includes ISO 2858, ISO 3069, ISO 3661, ASME/ANSI B73.1 designs) 7

1.3.6 Horizontal single-stage end-suction overhung impeller centrifugal pumps (for heavy-duty applications includes ISO 13709, API 610 designs) 8

1.3.7 Horizontal single-stage double-suction axially- split pumps (for general purposes) 8

1.3.8 Horizontal single-stage double-suction radially-split pumps (for heavy-duty applications includes ISO 13709, API 610 designs) 9

1.3.9 Horizontal two-stage end-suction overhung impeller centrifugal pumps 9

1.3.10 Vertical single-stage overhung impeller centrifugal pumps for general applications 10

1.3.11 Vertical single-stage overhung impeller centrifugal pumps (for chemical applications includes ASME/ANSI B73.2 designs) 11

1.3.12 Vertical multi-stage centrifugal pumps for general applications (including segmental pumps, dH < 300 m, deep well ejector applications, wash water) 11

1.3.13 Vertical wet-pit pumps 13

1.3.14 Vertical dry-pit pumps 13

1.3.15 Marine pumps 13

Self-priming pumps 14

1.3.16 Submersible pumps with electric motor 15

1.3.17 Non-electric submersible pumps 15

1.3.18 Submersible pumps for deep well applications 16

1.3.19 Portable self-priming pumps 16

1.3.20 Horizontal two-stage axially-split centrifugal pumps (includes ISO 13709, API 610 designs) 17

1.3.21 Horizontal two-stage radially-split centrifugal pumps (includes ISO 13709, API 610 designs) 18

1.3.22 Multi-stage segmental centrifugal pumps dH > 300 m 18

1.3.23 Horizontal multi-stage axially-split centrifugal pumps (includes ISO 13709, API 610 designs) 19

1.3.24 Horizontal multi-stage radially-split centrifugal pumps (includes ISO 13709, API 610 designs) 20

1.3.25 Large vertical multi-stage centrifugal pumps (includes ISO 13709, API 610 designs) 22

1.3.26 Single-stage centrifugal pumps with integral gearing 22

1.3.27 Multi-stage centrifugal pumps with integral gearing 22

1.3.28 Centrifugal pumps for pulp 23

1.3.29 Centrifugal pumps for handling solids< 10 mm 23

1.3.30 Centrifugal pumps for handling solids > 10 mm 23

1.3.31 Non-clogging pumps 24

1.3.32 Submersible non-clogging pumps 25

1.3.33 Mixed-flow pumps 25

1.3.34 Axial flow pumps 26

1.3.35 Non-metallic rotodynamic pumps 26

1.3.36 Hygienic-quality rotodynamic pumps 27

1.3.37 Magnetic drive rotodynamic pumps 27

1.3.38 Canned motor rotodynamic pumps 28

1.3.39 Rotodynamic pumps without drivers (for specific applications including mobile agricultural applications and mobile fire pumps) 29

1.4 Special rotodynamic pumps 29

1.4.1 Peripheral pumps 29

1.4.2 Pitot tube pumps 30

1.4.3 Disc pumps 31

1.4.4 Pumps as power-recovery turbines 31

1.5 Positive displacement pumps 31

1.5.1 External gear pumps 31

1.5.2 Internal gear pumps 32

1.5.3 Archimedes screw pumps 33

1.5.4 Twin-rotor screw pumps 34

LIBERTY EXHIBIT 1014, Page 13

This book belongs to Robert Durham (rdurham@thewaylabs.com) Copyright Elsevier 2024

NEW
Optimum Rotor

BÖRGER®
Rotary Lobe Pump
Macerating Technology

We didn't invent the Rotary Lobe Pump, we made something special of it!

As diversified and individual your application may be, so is the numerous variety of components and materials in the construction of our pump design. Each pump incorporates a "customized" solution based on the teamwork between the customer and our engineering department. Rotor shapes and materials are chosen and based on the characteristics of the pumped fluid.

Thanks to the unrivalled MIP-design, the Börger Rotary Lobe Pumps and Macerators reduces life cycle cost and downtime.

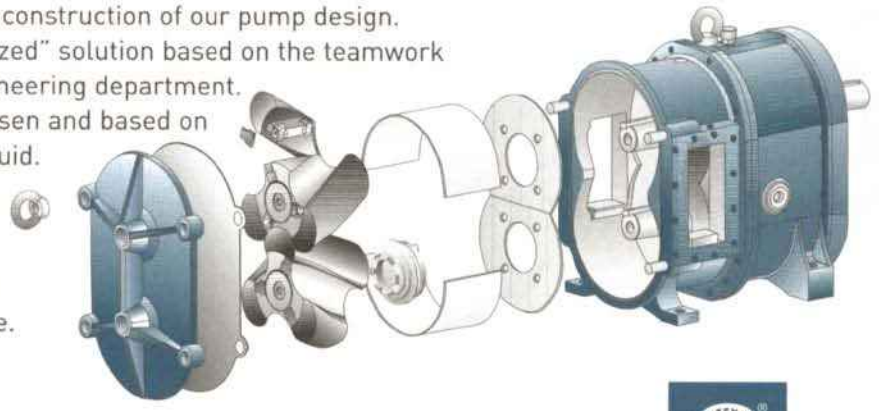

ATEX

TÜV CERT

MAINTENANCE MIP IN PLACE BÖRGER

Börger GmbH
46325 Borken-Weseke | Germany
Tel: +49 (0)2862 / 91 03 - 20 | www.boerger-pumps.com

PCM
Process Optimisation through Innovation

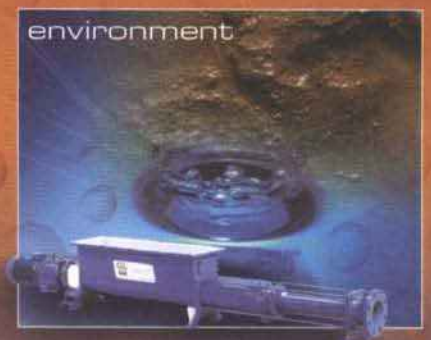

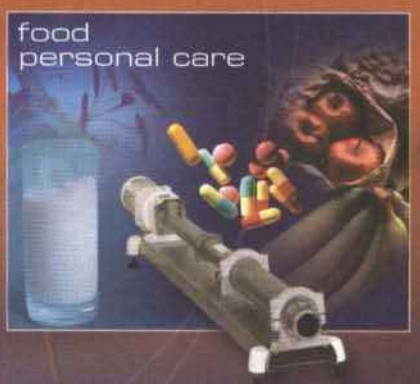

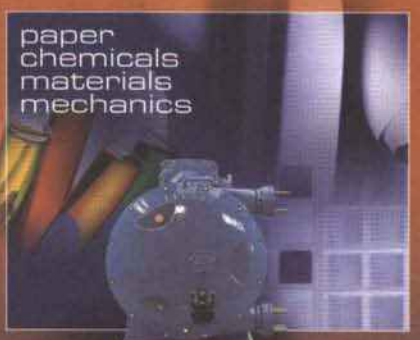

Leading technologies designed to integrate perfectly with industrial processes: turnkey systems and solutions for transferring, dosing and mixing liquids.
Near at hand teams and advanced services to respond to client demands at all times.

More than 70 years expertise serving the industry.
A business leader in these markets with an international presence.

REDUCED PCM LIFE CYCLE COSTS

PCM

PCM FOOD, PCM INDUSTRY, PCM MOINEAU® OILFIELD, PCM SERVICES, PCM DOSYS®

PCM Pompes - 17, rue Ernest Laval - BP 35 - 92173 Vanves cedex - France
Tél.: +33 1 41 08 15 15 - Fax: +33 1 41 08 15 00 - E-mail: pcm@pcmpompes.com - www.pcmpompes.com

LIBERTY EXHIBIT 1014, Page 14

This book belongs to Robert Durham (rdurham@thewaylabs.com) Copyright Elsevier 2024

1.5.5 Triple-rotor and 5-rotor screw pumps 34
1.5.6 Twin-rotor geared-screw pumps 34
1.5.7 Progressive cavity pumps 35
1.5.8 Lobe pumps (including circumferential piston pumps) 36
1.5.9 Vane pumps 37
1.5.10 Peristaltic pumps (including rotary peristaltic pumps) 38
1.5.11 Rotary eccentric piston pumps 39
1.5.12 Axial and radial piston pumps 40
1.5.13 Inline piston pumps 40
1.5.14 Descaling pumps 41
1.5.15 Plunger pumps (includes horizontal and vertical) 41
1.5.16 Syringe pumps 44
1.5.17 Diaphragm pumps (includes mechanical and hydraulic actuation) 44
1.5.18 Air-operated double-diaphragm pumps 45
1.5.19 Metering pumps (flow within ± 0.1% to ± 3% with substantial dp changes) 46
1.5.20 Direct-acting reciprocating pumps (includes pneumatic, hydraulic and steam actuation) 47
1.5.21 Non-metallic positive displacement pumps 48
1.5.22 Sealless positive displacement pumps 49
1.5.23 Hydraulic motors 49

1.6 Other pump types 50

1.6.1 Ejectors 50
1.6.2 Barrel-emptying pumps (powered and hand pumps) 51
1.6.3 Hydraulic-ram pumps 52
1.6.4 Air-lift pumps 52
1.6.5 Contraction pumps 53
1.6.6 Macerators 53

1.7 Useful references 53

2 Property of liquids 55

2.1 Explanation of terms 56

2.1.1 Introduction 56
2.1.2 Changes of state 56
2.1.2.1 Comments 57
2.1.3 Viscosity 57
2.1.3.1 Newton's Law of Viscosity 57
2.1.3.2 Absolute viscosity 57
2.1.3.3 Kinematic viscosity 57
2.1.3.4 Newtonian liquids 57
2.1.3.5 Non-Newtonian liquids 57
2.1.3.6 Comments 58
2.1.3.7 Penetration 58
2.1.4 Density and relative density 58
2.1.4.1 Density 58
2.1.4.2 Relative density 59
2.1.5 Compressibility 59
2.1.5.1 Acoustic velocity 59
2.1.6 pH value 59
2.1.7 Hazards 60
2.1.7.1 Health hazards 60
2.1.7.2 Physical hazards 60
2.1.7.3 Environmental hazards 60
2.1.7.4 Installation hazard assessment 60
2.1.7.5 Useful sources of information 62

2.2 Water 63

2.2.1 Demineralized water 63
2.2.2 Fresh water 64
2.2.2.1 General 64
2.2.2.2 pH value and choice of material 64
2.2.2.3 Hardness of water 65
2.2.2.4 Carbonic acid and carbonate equilibrium 65
2.2.3 Brackish water 66
2.2.4 Seawater 66
2.2.4.1 General 66
2.2.4.2 The qualities of seawater and corrosion 66
2.2.4.3 Choice of materials 67

2.3 Oils 68

2.3.1 General 68
2.3.1.1 Cloud point, pour point and solidifying point 68
2.3.2 Viscosity 68
2.3.2.1 Burner oils 68
2.3.2.2 Engine oils 69
2.3.2.3 Gearbox oils 69
2.3.2.4 Industrial oils 69
2.3.3.5 Other liquid data 70

2.4 Liquid-solid mixtures 70

2.4.1 General 70
2.4.1.1 Liquid properties 71
2.4.1.2 Size of particle 71
2.4.1.3 Particle density 71
2.4.1.4 Shape, hardness and abrasiveness 71
2.4.1.5 Deformable particles 71
2.4.1.6 Friable particles 71
2.4.1.7 Solids concentration 71
2.4.1.8 Velocity 73
2.4.2 Sewage 73
2.4.3 Sludge 73
2.4.4 Pulps 74
2.4.4.1 General 74
2.4.4.2 Pulp quality 74
2.4.4.3 Air content in pulp 74
2.4.4.4 Pulp properties which complicate pumping 74

2.5 Liquid-gas mixtures 74

2.5.1 General 74
2.5.2 Useful observations 75

2.6 Table of liquid properties 75

2.6.1 Introduction 75
2.6.2 Liquid Table 77

LIBERTY EXHIBIT 1014, Page 15

This book belongs to Robert Durham (rdurham@thewaylabs.com) Copyright Elsevier 2024

Dickow-Pumps fulfill your requirements!

Air Cooled Dickow Thermal Oil Circulation Pumps

for temperatures up to 400°C without water cooling. Our sophisticated technology, high availability and efficiency convinces Engineers, Operators, Accountants and Owners.

Ask for more information or visit our website. Our experts will provide the solution you need for your special application. Our global partners will provide services locally.

Our active contribution to environmental protection

Volute Casing Pump NKLs (EN 733) with single bellows seal

Volute Casing Pump NCL (EN 22858) with tandem bellows seal and thermosyphon vessel

Volute Casing Pump NMW with magnetic coupling

DICKOW PUMPEN

Dickow Pumpen KG
Siemensstr. 22, D-84478 Waldkraiburg
Postfach 1254, D-84465 Waldkraiburg

Tel. 0 86 38/602-0, Fax 0 86 38/602-200
E-Mail: export@dickow.de
Internet: http://www.dickow.de

CORROSION RESISTANT plastic Centrifugal Pumps

Materials: PP, PVC, PVDF, PE-HD
No metal parts in contact with the media to be pumped.
Flow rates up to 150m³/h, Heads up to 60 m w.c.

AS VERTICAL PUMPS
Centrifugal pumps tailored to the tanks depth. Cantilever shafts without intermediate supports.

OMA HORIZONTAL PUMPS
Close-coupled, end suction, single stage horizontal centrifugal pumps Internal balanced mechanical seal.

SAVINO BARBERA

Via Torino, 12 - 10032 Brandizzo (TO) ITALY
Tel. +39 011.913.90.63 - Fax +39 011.913.73.13
info@savinobarbera.com - www.savinobarbera.com

FURTHER PRODUCTS
Drum pumps
Magnetic drive pumps
Double diaphragm pumps
Stirrers

LIBERTY EXHIBIT 1014, Page 16

This book belongs to Robert Durham (rdurham@thewaylabs.com) Copyright Elsevier 2024

2.6.3 Supplementary diagrams 85
2.7 Useful references 94
3 Flow of liquids 95
3.1 Fundamental equations 96
3.1.1 Explanation of concepts 96
3.1.2 The continuity equation 96
3.1.3 Bernoulli's equation 96
3.1.4 The momentum equation 97
3.1.5 The energy equation 98
3.2 Pipe flow losses 99
3.2.1 Reynolds Number 99
3.2.2 Head losses in straight pipes 99
3.2.3 Head losses in fittings 100
3.2.4 Hydraulic diameter 101
3.2.5 Total head losses in the pipe system 102
3.3 Liquid-solid mixtures 102
3.3.1 General 102
3.3.2 Homogeneous mixtures 102
3.3.3 Heterogeneous mixtures 103
3.3.3.1 Special note 105
3.3.4 Paper pulp 105
3.3.4.1 General 105
3.3.4.2 Calculation of pipe flow losses 105
3.3.4.3 Calculation example 106
3.4 Pressure losses - nomograms and diagrams 107
3.4.1 General 107
3.4.1.1 Calculation example 108
3.4.2 Water 108
3.4.2.1 Calculation example 108
3.4.3 Oil 112
3.4.4 Paper pulp 116
3.5 Flow measurement 116
3.5.1 General 116
3.5.1.1 Measurement requirements 116
3.5.1.2 Methods of measurement 116
3.5.1.3 Measuring range 117
3.5.1.4 Accuracy of measurement 117
3.5.1.5 Straight pipe length 117
3.5.2 Flow meters for pipes 118
3.5.2.1 Electromagnetic flow meters 118
3.5.2.3 Orifice plates and nozzles 119
3.5.2.4 Venturi meters 119
3.5.2.5 Turbine meters 119
3.5.2.6 Ultrasonic meters 119
3.5.2.7 Swirl flow meters 120
3.5.2.8 Vortex shedding flow meters 120
3.5.2.9 Variable orifice or aperture flow meters 120
3.5.2.10 Calorimetric flow meters 120
3.5.3 Flow meters for open channels 120
3.5.3.1 Measurement flumes 120
3.5.3.2 Weirs and notches 120
3.5.3.3 Vanes 121
3.5.4 Other instruments for flow measurements 121
3.5.4.1 Tanks 121
3.5.4.2 Pitot-static tube 121
3.5.4.4 Laser-doppler 122
3.5.4.5 Hot-wire anemometer 122
3.5.4.6 Various arrangements for checking flow 122
3.5.5 Measurement standards 122
3.5.5.1 Measurement in pipe and duct systems 122
3.5.5.2 Measurement in open channels 123
3.6 Useful references 123
4 Pump theory 125
4.1 Introduction 126
4.2 Rotodynamic pumps 127
4.2.1 Rotodynamic pump theory 127
4.2.1.1 Differential head 127
4.2.1.2 Losses and efficiency 128
4.2.1.3 Euler's equation 129
4.2.1.4 Pump curves 130
4.2.1.5 Specific speed 131
4.2.1.6 Similarity 131
4.2.1.7 Axial thrust and radial forces 132
4.2.2 Rotodynamic pump curves 133
4.2.2.1 Presentation of data 133
4.2.3 Classification of rotodynamic pumps by hydraulic design 137
4.2.3.1 Impeller 137
4.2.3.2 Multi-stage pumps 137
4.2.4 Classification of rotodynamic pumps by application 138
4.3 Positive displacement pumps 138
4.3.1 Rotary positive displacement pump theory 138
4.3.2 Reciprocating positive displacement pump theory 139
4.3.3 Positive displacement pump curves 143
4.3.4 Types of positive displacement pumps 144
4.3.5 Classification of positive displacement pumps by application 145
4.3.6 Classification of other pump types by application 145
4.4 Suction performance 145
4.4.1 Cavitation 145
4.4.2 Net Positive Suction Head and Net Positive Inlet Pressure 146
4.4.3 Permissible suction lift 147
4.4.4 Cavitation effects on pump operation 148
4.4.5 Self-priming 150
4.4.6 Effects of dissolved and entrained gases 150
4.4.7 Calculation examples 152
4.5 Useful references 153

This book belongs to Robert Durham (rdurham@thewaylabs.com)
Copyright Elsevier 2024

5 Pumps and piping systems 155
5.1 System curves 156
5.1.1 Pump nominal duty point 156
5.1.2 Single pipe system 156
5.1.3 Variable system curves 157
5.1.4 Branched pipe systems 158
5.1.5 Viscous and non-Newtonian liquids 160
5.2 Pressure drop across valves 160
5.2.1 General 160
5.2.2 Isolating valves 160
5.2.3 Non-return valves 160
5.2.4 Control valves 160
5.2.4.1 Calculation example 161
5.2.4.2 Summary 162
5.3 Multiple pump systems 162
5.3.1 Series pump operation 162
5.3.2 Parallel pump operation 163
5.3.3 Pressure boosting 164
5.3.4 Pressure maintenance 165
5.4 Pump hydraulic data 166
5.4.1 Hydraulic tolerances 166
5.4.1.1 General 166
5.4.1.2 Rotodynamic pumps 166
5.4.1.3 Positive displacement pumps 166
5.4.2 Pump H and Q at maximum efficiency η_{max} 167
5.4.3 Minimum pump flow 167
5.4.3.1 Devices for obtaining a minimum flow 168
5.5 Water hammer 168
5.5.1 Hydraulic gradient 168
5.5.2 Causes of water hammer 169
5.5.3 Pump behaviour after power loss 169
5.5.3.1 Pump curves 169
5.5.3.2 Pump stops without non-return valve 170
5.5.4 Protection against water hammer 170
5.5.4.1 Protection equipment 170
5.5.4.2 Valve closing time T 171
5.5.4.3 Pump stops with non-return valve 171
5.5.4.4 Pump stops without non-return valve 171
5.5.4.5 Hydraulic gradients 171
5.5.4.6 Protection equipment 172
5.6 Pressure pulsations 173
5.6.1 Rotodynamic pumps 173
5.6.2 Positive displacement pumps 173
5.7 Useful references 173
6 Flow regulation and control 175
6.1 Introduction 176
6.2 Variable flow requirements 176
6.3 Flow regulation 177
6.3.1 Methods 177
6.3.2 Control parameters 177
6.4 On-off control of constant speed pump 178
6.4.1 Principles 178
6.4.2 Costs 178
6.4.3 Starting/loading problems 178
6.4.4 Stopping/unloading problems 179
6.4.5 Operational sequences 179
6.4.6 Storage volumes 180
6.4.7 Power consumption 181
6.4.8 Examples 182
6.5 Pole-changing induction motors 182
6.5.1 Principle and application 182
6.5.2 Costs 183
6.5.3 Starting problems 183
6.5.4 Stopping problems 183
6.5.5 Storage volumes 183
6.5.6 Power consumption 183
6.5.7 Examples 183
6.6 Multi-speed gearboxes 184
6.6.1 Principles 184
6.6.2 Costs 184
6.6.3 Starting problems 184
6.6.4 Stopping problems 184
6.6.5 Storage volumes 184
6.6.6 Power consumption 184
6.6.7 Examples 184
6.7 Throttling by control valve 184
6.7.1 Principles 184
6.7.2 Costs 185
6.7.3 Sizing the control valve 185
6.7.4 Power consumption 186
6.7.5 Example 186
6.8 By-pass return 186
6.8.1 Principle and application 186
6.8.2 Costs 187
6.8.3 Sizing the by-pass 187
6.8.4 Overflow by-pass return 187
6.8.5 Power consumption 187
6.8.6 Example 188
6.9 Infinitely variable speed 188
6.9.1 Principles 188
6.9.1.1 Variable ratio transmissions 188
6.9.1.2 Mechanical variators 188
6.9.1.3 Hydrostatic couplings 189
6.9.1.4 Fluid couplings 189
6.9.1.5 Torque convertors 189
6.9.1.6 Eddy current couplings 189
6.9.2 Variable speed drivers 189
6.9.2.1 Petrol engines 189

LIBERTY EXHIBIT 1014, Page 18

This book belongs to Robert Durham (rdurham@thewaylabs.com) Copyright Elsevier 2024

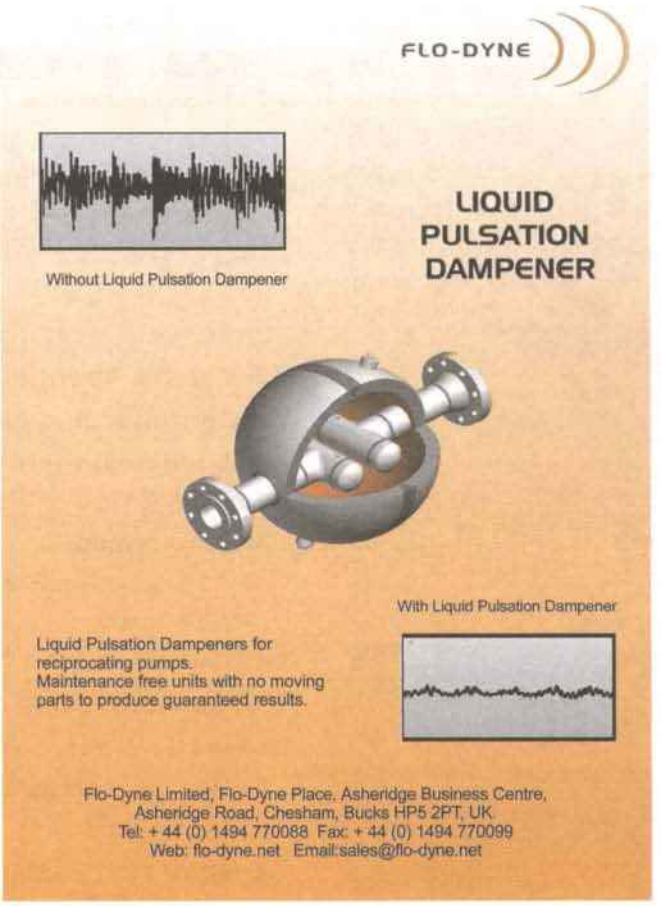

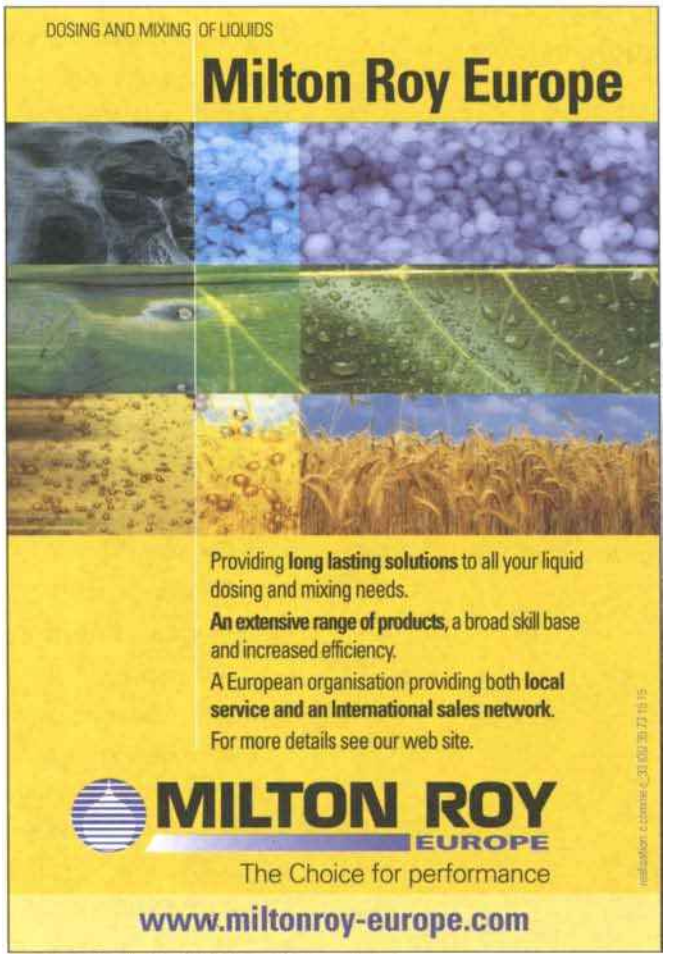

This book belongs to Robert Durham (rdurham@thewaylabs.com) Copyright Elsevier 2024

6.9.2.2 Diesel engines 190
6.9.2.3 Gas engines 190
6.9.2.4 Crude oil burning engines 190
6.9.2.5 Air motors 190
6.9.2.6 Steam turbines 190
6.9.2.7 Gas turbines 190
6.9.2.8 Turbo-expanders 191
6.9.2.9 Hydraulic turbines 191
6.9.2.10 AC squirrel cage induction motors 191
6.9.2.11 AC slip ring motors 191
6.9.2.12 Switched reluctance motors 191
6.9.2.13 DC motors 192
6.9.3 Costs 192
6.9.4 Conversion of pump curves to various speeds 192
6.9.5 Efficiencies of various methods 193
6.9.6 Power consumption 194
6.9.7 Regulation system schematics 195
6.9.8 Schematics for various systems 196
6.9.8.1 Variable ratio coupling 196
6.9.8.2 Voltage regulated induction motor 196
6.9.8.3 Frequency regulated induction motor 197
6.9.8.4 DC motor drive 197
6.9.8.5 Slipring induction motor 197
6.9.8.6 Engines 197
6.9.8.7 Air motors 197
6.9.8.8 Turbines 197
6.9.8.9 Turbo-expanders and hydraulic turbines 197
6.10 Choice of flow regulation method 197
6.10.1 General 197
6.10.2 Direct flow regulation 198
6.10.3 Speed regulation 198
6.11 Useful references 201
7 Materials for pumps 203
7.1 Introduction 204
7.2 Typical materials 204
7.2.1 Grey cast iron 205
7.2.2 Spheroidal and nodular cast iron 206
7.2.3 Low alloy steel 206
7.2.4 Alloyed cast iron 206
7.2.4.1 Copper, (for flaked graphite cast iron only) 206
7.2.4.2 Nickel and chromium 206
7.2.4.3 Silicon 207
7.2.5 11-13% Cr steel 208
7.2.6 Stainless steel 208
7.2.7 Super stainless steel 209
7.2.8 Copper alloys 209
7.2.9 Aluminium alloys 210
7.2.10 Nickel alloys 210
7.2.11 Other metallic materials 210
7.2.11.1 Lead and lead alloys 210
7.2.11.2 Titanium 211
7.2.11.3 Tantalum 211
7.2.11.4 Tungsten carbide 211
7.2.12 Non-metallic materials 211
7.2.12.1 Thermoplastics 212
7.2.12.2 Thermosetting plastics 213
7.2.12.3 Elastomers 215
7.2.12.4 Ceramics 215
7.2.12.5 Minerals 215
7.2.13 Coatings 215
7.3 Material strength and integrity 216
7.4 Corrosion and erosion 217
7.4.1 Liquid corrosion of metals 217
7.4.2 Corrosion rate 218
7.4.3 Types of corrosion 218
7.4.3.1 Galvanic corrosion 218
7.4.3.2 Erosion-corrosion 219
7.4.4 Corrosion testing 219
7.5 Abrasion resistant materials 220
7.5.1 Pump selection 220
7.5.2 Hard metallic materials 220
7.5.3 Rubber cladding 221
7.6 Materials resistant to cavitation damage 221
7.7 Material selection 222
7.7.1 Basic information 222
7.7.2 Material combinations 222
7.7.3 Corrosion resistance 223
7.7.4 Corrosive effects of unknown materials 224
7.8 Conclusions 224
7.9 Useful references 224
8 Process seals and sealing 227
8.1 Introduction 228
8.2 Rotary shafts 228
8.2.1 Non-contacting seals 228
8.2.2 Lip seals 228
8.2.3 Hover seals 228
8.2.4 Auxiliary pumps 229
8.2.5 Soft packing 229
8.2.6 Mechanical seals 229
8.3 Process liquid seals for rotary shafts 229
8.3.1 Soft packing 230
8.3.1.1 Operating principles 230
8.3.1.2 Design variations 230
8.3.1.3 Packing material 232
8.3.1.4 External systems 232
8.3.1.5 Maintenance 232
8.3.1.6 Trouble-shooting 233
8.3.2 Mechanical seals 233

LIBERTY EXHIBIT 1014, Page 20

This book belongs to Robert Durham (rdurham@thewaylabs.com) Copyright Elsevier 2024

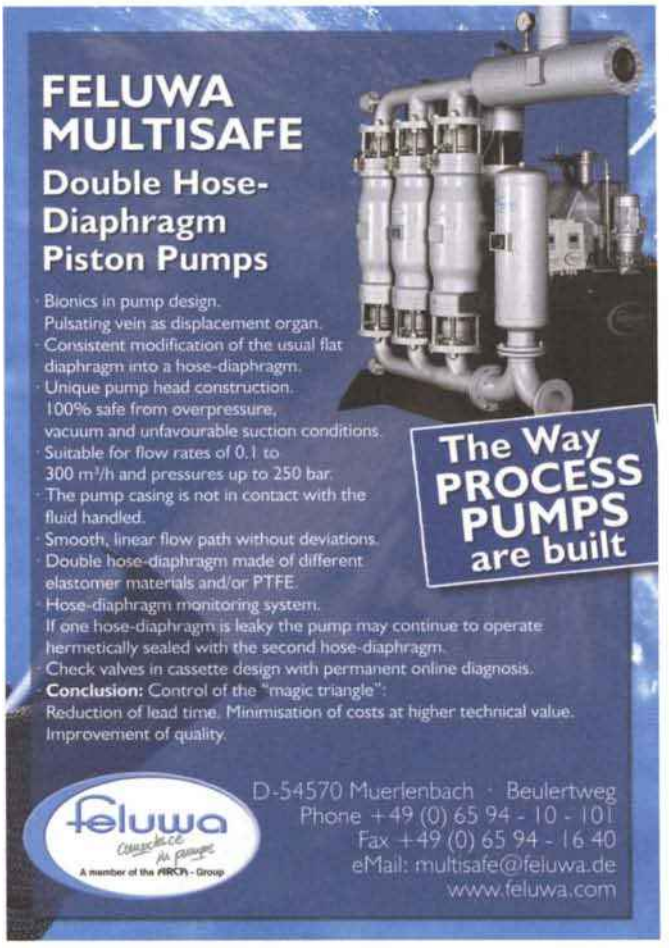

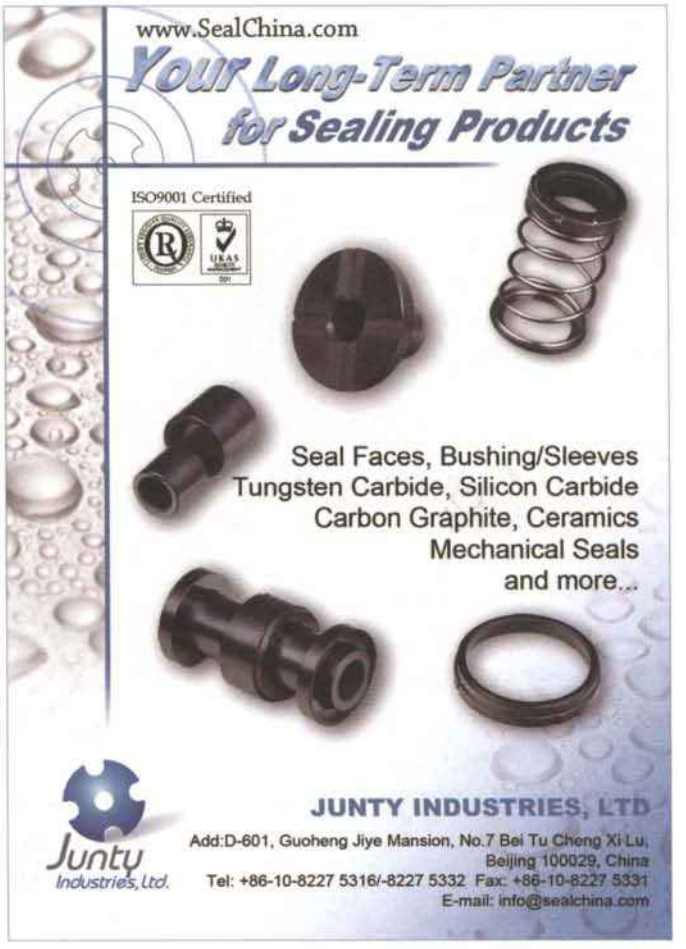

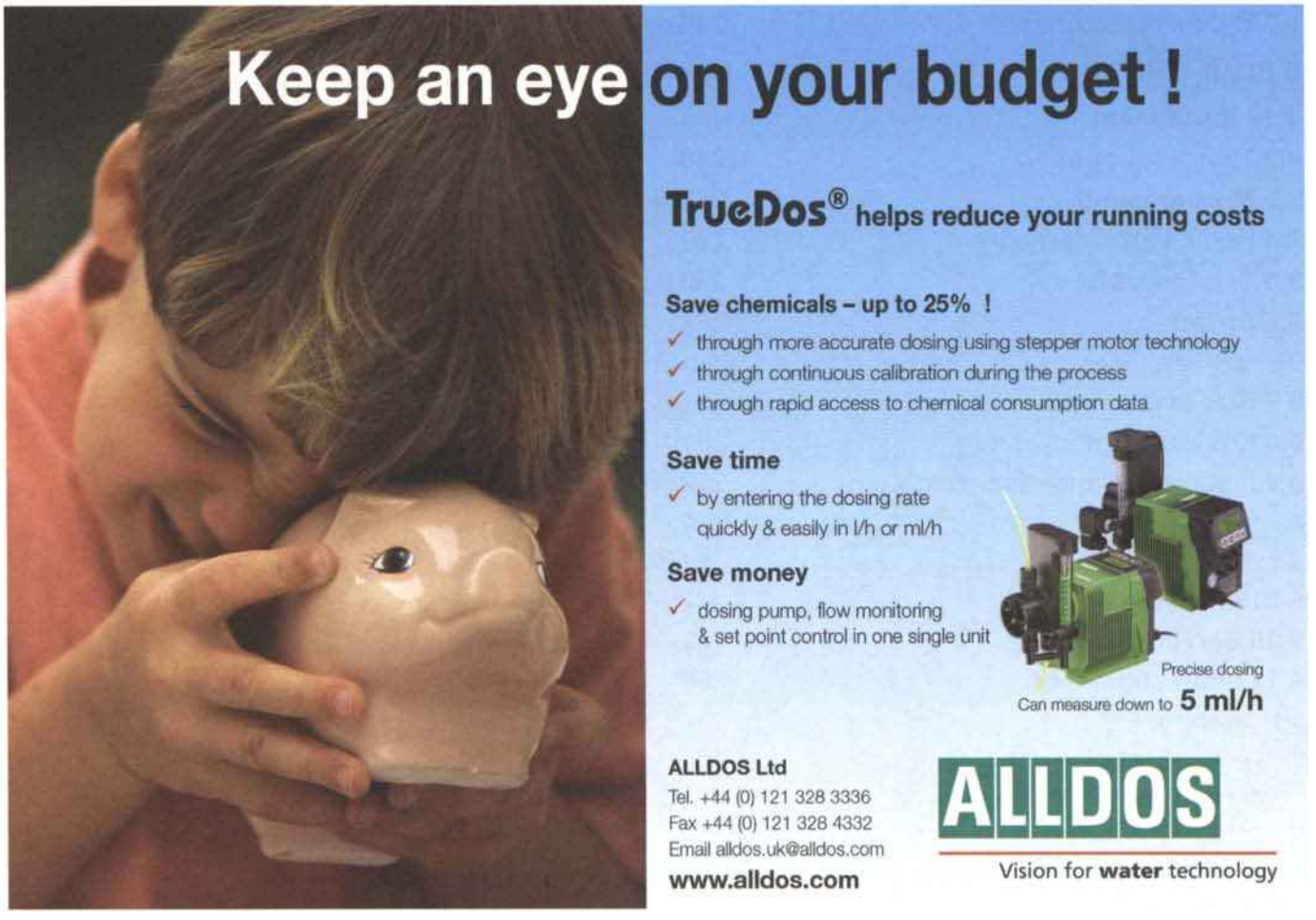

This book belongs to Robert Durham (rdurham@thewaylabs.com)

Copyright Elsevier 2024

8.3.2.1 Operating principles 233
8.3.2.2 Surface flatness 234
8.3.2.3 Design principles 234
8.3.2.4 Temperature considerations 236
8.3.2.5 Design variations 236
8.3.2.6 Materials 240
8.3.2.7 External systems 240
8.3.2.8 Maintenance 242
8.3.2.9 Trouble-shooting 242
8.4 Reciprocating rods 242
8.4.1 Lip seals 242
8.4.2 Soft packing 243
8.5 Process liquid seals for reciprocating rods 243
8.5.1 Operating principles 243
8.5.2 Design variations 243
8.5.3 Packing material 244
8.5.4 External systems 244
8.5.5 Maintenance 244
8.5.6 Trouble-shooting 244
8.6 Process liquid seal selection 244
8.6.1 Process liquid 244
8.6.2 Size, speed and pressure 244
8.6.3 Local environment 245
8.6.4 Cost 245
8.6.5 Standardisation 245
8.7 Useful references 246
9 Shaft couplings 247
9.1 Introduction 248
9.2 Types of coupling 248
9.3 Misalignment 249
9.4 Forces and moments 250
9.5 Service factors 250
9.6 Speed 251
9.6.1 Example 251
9.7 Size and weight 251
9.8 Environment 251
9.9 Installation and disassembly 252
9.9.1 Alignment 252
9.9.2 Baseplates 252
9.9.3 Attachment 252
9.10 Service life 252
9.11 Shaft alignment 254
9.11.1 General 254
9.11.2 Alignment measurement 254
9.11.2.1 Reference line misalignment 254
9.11.2.2 Alignment procedure 254
9.11.2.3 Choice of method 255
9.11.3 Determination of shim thickness 255
9.11.3.1 Example 255
9.11.4 Graphical determination shim thickness 256
9.11.5 Optical alignment 256
9.12 Choice of coupling 257
9.12.1 Costs 257
9.12.2 Factors influencing choice 258
9.13 Machinery guards 258
9.14 Useful references 258
10 Drivers for pumps 261
10.1 Basic electrical theory and principles 262
10.1.1 Units 262
10.1.2 Systems 262
10.1.3 Power 263
10.1.3.1 Power factor 263
10.1.4 Phase compensation 263
10.1.5 Motor speed 263
10.1.6 Torque 264
10.1.7 Voltage 264
10.1.8 Starting 265
10.1.9 Efficiency 265
10.2 Regulations and standards 265
10.2.1 Controlling authorities 265
10.2.1.1 Specification compliance 266
10.2.2 Physical protection 267
10.2.3 Cooling categories 267
10.2.4 Mounting arrangements 268
10.2.5 Terminal markings and direction of rotation 269
10.2.6 Rated power, centre height and outline dimensions 269
10.2.7 Temperature classification 269
10.2.8 Potentially explosive atmospheres 270
10.2.9 Certification 270
10.3 Motor types 270
10.3.1 Constant speed AC motors 270
10.3.1.1 Synchronous motor 270
10.3.1.2 Squirrel-cage motors 271
10.3.1.3 Slipring motors 271
10.3.2 Variable speed AC motors 271
10.3.2.1 Pole-changing motors 271
10.3.2.2 Variable frequency motors 271
10.3.3 Variable speed DC motors 272
10.4 Motor starters 273
10.4.1 Protection 273
10.4.1.1 Short circuit protection 273
10.4.1.2 Overload protection 273
10.4.1.3 High temperature protection 273
10.4.1.4 Safety switch 274
10.4.1.5 Ammeter 274
10.4.2 Direct-on-line (DOL) 274

LIBERTY EXHIBIT 1014, Page 22

This book belongs to Robert Durham (rdurham@thewaylabs.com) Copyright Elsevier 2024

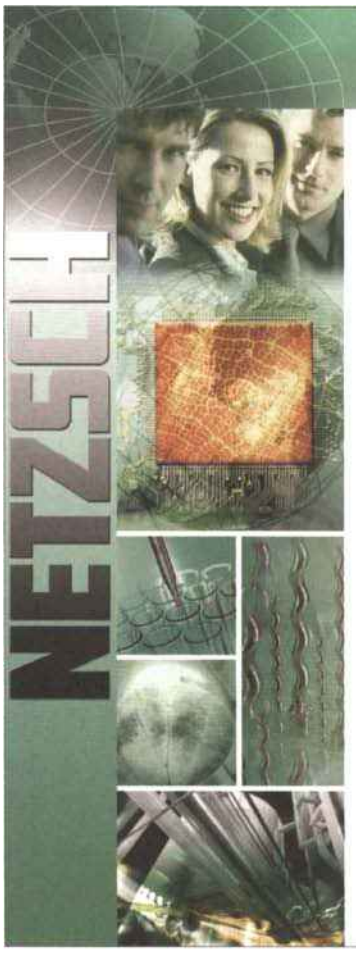

NETZSCH The heart of your process

For over five decades, NETZSCH has developed, manufactured and marketed NEMO® Progressing Cavity Pumps worldwide. These accumulated capabilities are supplemented by partnerships with our national and international customers from all types of industries. In cooperation with them we optimise existing models and develop new products.

Our products for your processes

- NEMO® Progressing Cavity Pumps
- TORNADO® Rotary Lobe Pumps
- NETZSCH Grinding Systems
- NETZSCH Accessories and Optional Equipment
- NETZSCH Genuine Spare Parts and Service

Our strength:

Innovative quality products and service to the benefit of our customers

NETZSCH

The heart of your process

NETZSCH Mohnopumpen GmbH
Geretsrieder Straße 1
D-84478 Waldkraiburg
Phone: +49 8638 63-0
Fax: +49 8638 67981
E-mail: info@nmp.netzsch.com
www.netzsch-pumps.com

Power pumps...

...for top performances.

URACA high pressure plunger pump units are the heart of all high-tech systems in the field of

- chemical process industry
- petrochemical industry
- metal producing industry
- high pressure cleaning industry

and wherever competence in high pressure technique is required.

URACA GmbH + Co. KG
P.O. Box 1260 · D-72563 Bad Urach
Phone ++49 (7125) 133-0
Fax ++49 (7125) 133-202
www.uraca.com

This book belongs to Robert Durham (rdurham@thewaylabs.com)

Copyright Elsevier 2024

10.4.3 Star-Delta (Y-Δ) 274
10.4.4 Soft starts 274
10.4.5 Resistance 275
10.4.6 Reactor and transformer starters 275
10.5 Noise 275
10.6 Maintenance 275
10.7 Engines 275
10.8 Turbines 276
10.9 Power recovery turbines 276
10.10 Motor selection illustration 276
10.11 National Standards bodies 276
10.12 Useful references 278
11 Ancillary equipment 279
11.1 Introduction 280
11.2 Mountings 280
11.2.1 Baseplates 280
11.2.2 Skids 280
11.2.3 Trailers 281
11.2.4 Lifting frames 281
11.3 Belt drives 281
11.4 Gearboxes 281
11.5 Relief valves 282
11.5.1 Spring-loaded 283
11.5.2 Pilot-operated 283
11.5.3 Air-assisted 283
11.5.4 Shear pin and buckling pin relief valves 283
11.5.5 Bursting discs 283
11.6 Non-return valves 283
11.6.1 General 283
11.6.2 Water hammer and pressure surge in pipes 285
11.6.3 Choice of type of non-return valve 285
11.6.4 Sizing non-return valves 285
11.6.5 Pressure drop 285
11.6.6 Pitfalls 285
11.6.6.1 Centrifugal pumps operating in parallel 285
11.6.6.2 The suction side of centrifugal pumps 286
11.7 Accumulators 286
11.8 Pulsation dampers 286
11.8.1 Gas-charged dampers 287
11.8.2 Inertial dampers 287
11.8.3 Acoustic dampers 288
11.8.4 Pressure pulsations 288
11.8.5 Computer simulation 288
11.9 Instrumentation 289
11.9.1 Integrated control and diagnostics 289
11.9.2 Annunciators 289
11.9.3 Connection to process pipework 289
11.10 Useful references 290
12 Quality, inspection and testing 291
12.1 Introduction 292
12.1.1 Physical properties 292
12.1.1.1 Ultimate strength 292
12.1.1.2 Limit of proportionality 292
12.1.1.3 Elongation 292
12.1.1.4 Reduction in area 292
12.1.1.5 Hardness 292
12.1.1.6 Impact strength 292
12.1.1.7 Fatigue strength 292
12.1.1.8 Creep resistance 292
12.1.2 Heat treatment 293
12.1.3 Chemical composition 293
12.1.4 Corrosion resistance 293
12.1.5 Non-destructive testing 293
12.1.5.1 Radiographic inspection 293
12.1.5.2 Ultrasonic inspection 293
12.1.5.3 Dye penetrant inspection 293
12.1.5.4 Magnetic particle inspection 293
12.1.6 Repairs 293
12.1.7 Welding 293
12.1.8 Inspection 294
12.1.9 Assembly 294
12.1.10 Packaging 294
12.1.11 Pressure testing 294
12.1.12 Running tests 294
12.1.13 Painting 295
12.1.14 Purchased equipment 295
12.1.15 Functional testing 295
12.1.16 Witnessing 296
12.1.17 Clarification of specifications 296
12.1.18 Certification 296
12.1.19 Documentation 297
12.2 Mass-produced pumps 297
12.3 Custom-built pumps 298
12.4 Guidelines for documentation 299
12.4.1 Rotodynamic pumps 299
12.4.2 Positive displacement pumps 300
12.4.3 Reciprocating positive displacement pumps 300
12.5 Useful references 301
13 Installation and maintenance 303
13.1 Installation 304
13.1.1 General 304
13.1.2 Ventilation 304
13.1.3 Noise and vibration 304
13.1.4 Siting 304
13.1.5 Baseplate and alignment 304
13.1.6 Separate pumps and motors 305
13.2 Foundations 305

LIBERTY EXHIBIT 1014, Page 24

This book belongs to Robert Durham (rdurham@thewaylabs.com) Copyright Elsevier 2024

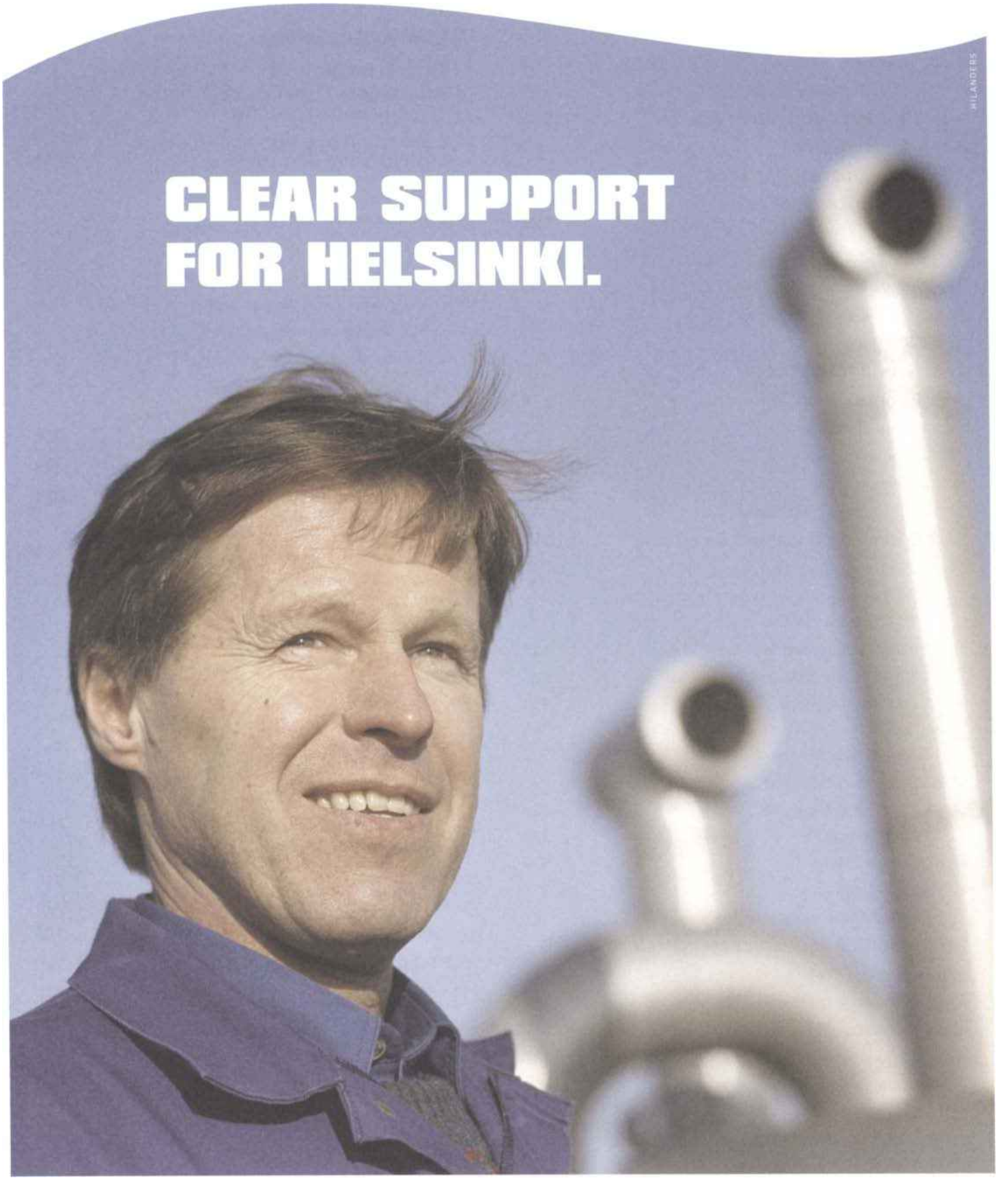

Carved into the bedrock of Finland's capital city is the Viikinmäki Wastewater Treatment Plant. Owned and operated by Helsinki Water, the underground facility is making great strides in reducing the nitrogen load in the Gulf of Helsinki.

ABS is lending a hand with pumps, agitators and diffusers. But also with customer-oriented service. "ABS really knows us and understands what we need," says Machine Engineer Lars Rundberg. "And that makes it all go smoothly."

To learn more about ABS and the achievements at Viikinmäki, visit **www.absgroup.com**

abs

We know how water works

This book belongs to Robert Durham (rdurham@thewaylabs.com)

Copyright Elsevier 2024

13.3 Tanks and sumps 305
13.3.1 General 305
13.3.2 Submersible pumps 306
13.4 Pipework and pipe systems 308
13.4.1 Valves in pipework 309
13.5 Care and maintenance 310
13.5.1 General considerations 310
13.5.2 Commissioning 310
13.5.3 Care of equipment 312
13.5.4 Preventative maintenance 313
13.5.5 Trouble-shooting guides 314
13.5.6 Stocking spare parts 316
13.6 Useful references 316
14.1 Economic optimisation 318
14.1.1 General 318
14.1.2 Whole-life costs 318
14.1.3 New and existing plant 319
14.1.3.1 Process adaptation 319
14.2 Economic assessment criteria 319
14.2.1 Investment calculation - new plant 319
14.2.1.1 Present capitalised value method 319
14.2.1.2 Annuity method 320
14.2.2 Investment calculation - existing plant 320
14.2.2.1 Present capitalised value method 320
14.2.2.2 Annuity method 320
14.2.2.3 Pay-off method 320
14.2.2.4 Investment grant 320
14.2.3 Estimated profits and service life 321
14.2.3.1 Estimated profits 321
14.2.3.2 Service life 321
14.2.4 Energy costs 321
14.2.4.1 Tariffs 321
14.2.4.2 Annual energy costs 321
14.3 Important system characteristics 322
14.3.1 Pumping efficiency 322
14.3.2 Demand variations 323
14.3.3 Availability 324
14.3.3.1 Liquid transport system 324
14.3.4 Hydraulic power 325
14.3.4.1 General 325
14.3.4.2 Static delivery head 325
14.3.4.3 Pipe flow losses 325
14.3.4.4 Suspensions 326
14.4 Partial optimisation 326
14.4.1 Economic pipe diameter 326
14.4.2 Component efficiency 327
14.4.3 Existing plant 327
14.5 Useful references 328
15 Pump selection 329
15.1 General operating conditions 330
15.1.1 Liquid properties and operating conditions 330
15.2 Selection of pump according to duty and capabilities 331
15.3 Selection of pump according to hydraulic performance 332
15.3.1 Pumps for low viscosity liquids 332
15.3.2 Pumps for viscous liquids 333
15.3.3 Pumps for highly viscous liquids 333
15.4 Pumps for liquid-solid mixtures 334
15.4.1 Pumping non-abrasive solids 334
15.4.2 Pumping abrasive solids 334
15.4.3 “Gentle” pumping 335
15.4.4 Pumping waste water, sewage 335
15.5 Check lists for pump purchase specification 336
15.6 Purchasing 339
16 Pump applications & solutions 341
16.1 Modern pumps for hydrocarbon-based and synthetic heat-transfer oils 343
Introduction 343
Pump performance 343
Pump design 343
Seals and bearings 343
The pump units 343
Temperature considerations 344
The carbon bearing 344
Bearing geometry 344
16.2 Pumping fresh water to a high reservoir 345
Operating conditions 345
System curves 345
Choice of pumps 345
Installation of pumps 346
16.3 A small sewage pumping station 347
Introduction 347
Pump and system curves 347
Operating conditions 347
16.4 A fresh water booster station 348
Method of operation 348
Pump curves 348
Valves 349
Control 349
Operating sequence 349
Limitations of operation 349
16.5 Magnetic drive pumps for Chlor-alkali manufacturing - mercury cell processing 349
Introduction 349
The mercury cell process 349

LIBERTY EXHIBIT 1014, Page 26

This book belongs to Robert Durham (rdurham@thewaylabs.com) Copyright Elsevier 2024

The pump 349
Mercury emissions 350
16.6 Domestic heating systems and pumps 350
Introduction 350
Boiler 350
Expansion vessel 350
Pipes 350
Radiators 350
Hot water for taps 350
Mixing valve 350
Clock-thermostat 350
Automatic control centre 351
Thermostat valves 351
Design temperature 351
Pump 351
Pitfalls 351
16.7 Adjustable jet pump 351
Introduction 351
Description 351
Regulation 351
System properties 351
16.8 Updating of water supply for industrial use 351
Control before updating 352
Control after updating 352
Alternative control 352
System details 352
Operational results after updating 352
16.9 Economic aspects of energy utilisation 352
Choice of pumps 352
Definitions and assumptions 353
Standard motor pump units 353
Wet rotor motor pump units 353
Equations 353
Comparison 354
Conclusions 355
16.10 Pumping of delicate solids - food and live fish 355
Introduction 355
Pumping food 355
Pumping live fish 356
16.11 Submersible sump pumps for construction projects 356
Introduction 356
Types of drainage 356
General plant information 356
Pump sizing data 356
General installation instructions for drainage 357
Flexible pipes 357
16.12 Use of engine driven self-priming pumps 358
Pumping unit 358
Size of pumps 358
Site installation 358
Pumping 358
Pitfalls 358
16.13 Cargo pumps for tankers 358
Large tankers for crude oil 358
Smaller tankers for finished products 359
LNG carriers 359
16.14 Detergent manufacturing systems - pump installations 360
Introduction 360
Pumping the raw material 360
The mixer 360
Finished detergent pump 360
16.15 High capacity bearings for compact centrifugal pump systems 360
Introduction 360
The need for compact bearings 361
Improved life and increased dynamic load ratings 361
16.16 Energy recovery turbines and reverse running centrifugal pumps 361
Introduction 361
Energy recovery and its uses 362
Reverse running pumps 362
Fundamentals 362
Effects of power recovery 363
16.17 Common errors which create pump operating problems 363
Planning of pipework 363
Liquid properties 364
Equipment positioning 364
Pipework design 364
16.18 Positive displacement pumps — load-unload control systems 365
Introduction 365
Typical system 365
Electric motors 365
Operation 365
Bypass valves 365
Damping 366
16.19 Plunger pumps for supercritical extraction service 366
Introduction 366
Background 366
Applications 366
The process 366
A high pressure supercritical recycle process 366

This book belongs to Robert Durham (rdurham@thewaylabs.com)
Copyright Elsevier 2024

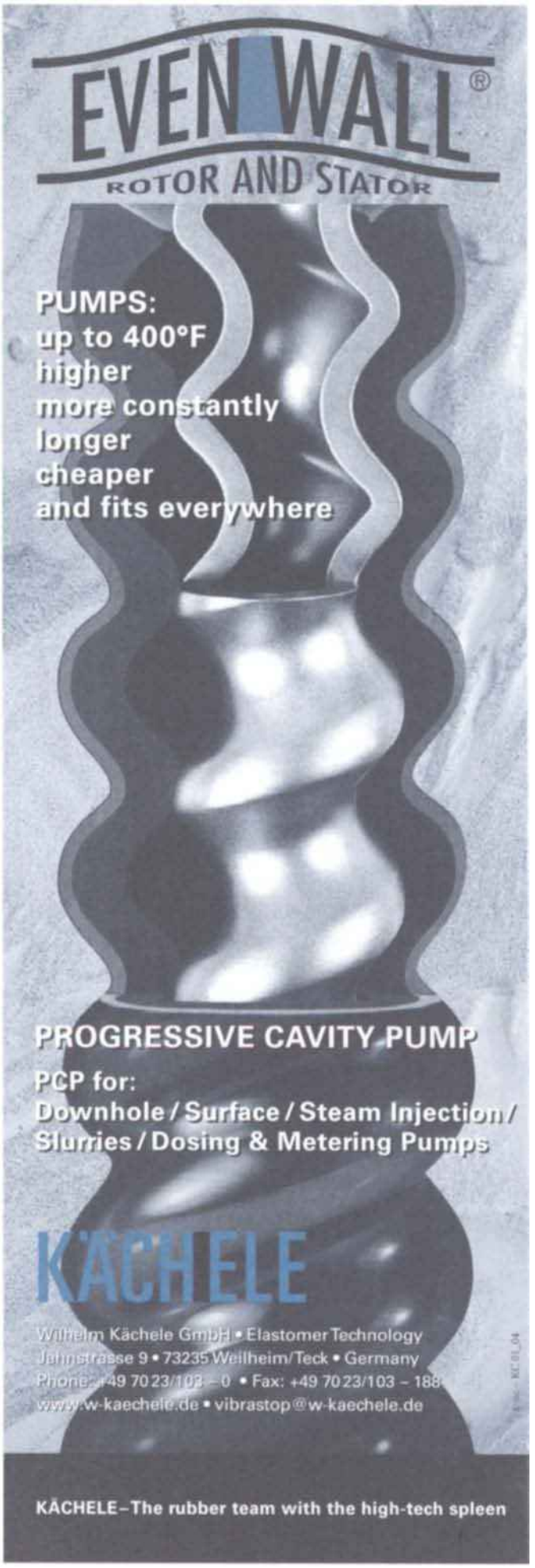

Supercritical extraction system 367
Liquid carbon dioxide pump requirements 367
Summary 368

16.20 Sealing systems for thermal oil pumps 368

Introduction 368
Pump concepts 368
Sealing systems 368
Field experience and application 369
Pump selection 369

16.21 Progressive cavity pump stator technology for improved candy production 370

Introduction 370
The progressive cavity pump 370
Even Wall® stators 370
Summary 371

16.22 Digital controllers for diaphragm dosing pumps with speed-controlled drive motors 371

Introduction 371
Reasons for dosing errors 371
Conventional solutions for monitoring volumetric flow 371
Operating principles of the flow monitor 371
Error detection 372
System solution 372
Summary 373

16.23 Positive displacement medium pressure pump system for tube press application 373

Introduction 373
Technical application 373
The solution 373
After installation 373

16.24 Boiler feed pump for efficient power station operation 374

Introduction 374
Turbine drives pump 374
Special vane profile 374
Hydraulic design 375
The first stage impeller 375
Simulating flow in the impeller 375
Cavitation testing 376
The rotor 376
The shaft bearings 376
The stationary components 376
Taking on 36.75 MN! 376
Shaft seals 377
Planned maintenance 377
A "well-tempered" pump 378

LIBERTY EXHIBIT 1014, Page 28

This book belongs to Robert Durham (rdurham@thewaylabs.com) Copyright Elsevier 2024

Remote monitoring accompanies commissioning 378
Summary 378
17 Standards, units & conversions 379
17.1 Standards 380
17.1.1 General 380
17.1.2 Issuing authorities 380
17.1.3 Pumps 381
17.1.4 Safety 382
17.1.5 Reliability and operational life 384
17.1.6 Dimensions and performance 384
17.1.7 Vibration and noise 384
17.1.8 Forces and moments on connections 385
17.1.9 Components 385
17.1.10 Performance testing 386
17.1.11 Hygiene 386
17.1.12 Electromagnetic pollution 387
17.2 SI, The International System of Units 387
17.3 Conversion factors for SI units 389
17.4 Other conversion factors 394
17.5 Normal quantities and units used in pump technology 396
17.6 Useful references 396
18 Buyers guide 397
18.1 Introduction 398
18.2Company names and addresses 399
18.3 Rotodynamic pumps 427
18.4 Positive displacement pumps 444
18.5 Other pumps 451
18.6 Ancillary products and services 452
18.7 Trade names 456
Index 459
Acknowledgements 470
Index to advertisers 470

This book belongs to Robert Durham (rdurham@thewaylabs.com)
Copyright Elsevier 2024

Tel: +44 1592 775577
Fax: +44 1592 775517
E-mail: sales@ddl-ltd.com
Web: www.ddl-ltd.com

DAWSON DOWNIE LAMONT

Dawson Downie Lamont specialise in the design and manufacture of direct-acting steam driven reciprocating pumps to API 674 for the oil & gas and petrochemical industries

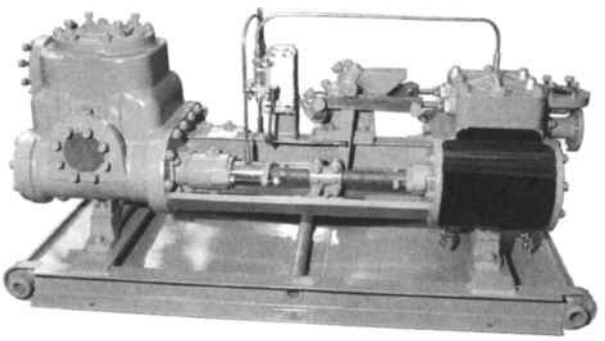

Unit 31 Rutherford Road
Southfield Industrial Estate
Glenrothes KY6 2RT
Scotland United Kingdom

Pumps with Built-in Reliability

For Acids Alkalis Corrosive and erosive fluids

Glandless Centrifugal Pumps - *designed and manufactured to meet industry's highest standards*

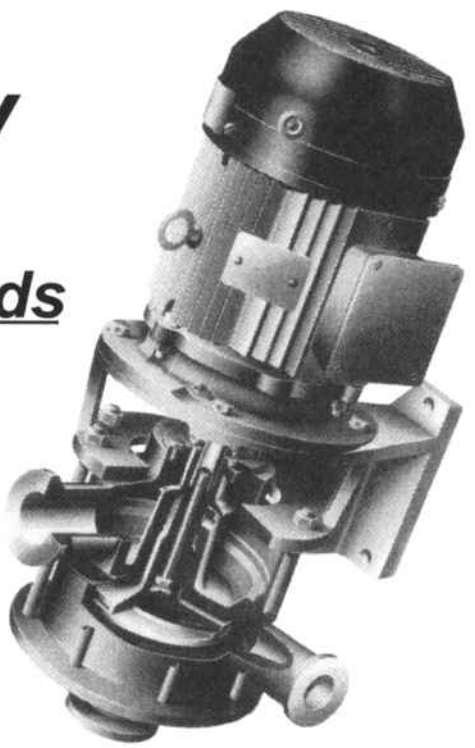

KESTNER
Engineering Co. Limited

Bredgar Road, Gillingham
Kent ME8 6PN England

Tel: 01634 386683 Fax: 01634 386684
E-mail: sales@kestner-eng.co.uk Web: www.kestner-eng.co.uk

LIBERTY EXHIBIT 1014, Page 30

This book belongs to Robert Durham (rdurham@thewaylabs.com) Copyright Elsevier 2024

Pump types 1

1.1 Introduction

1.2 Checklist of pump terminology and definitions

1.3 Rotodynamic pumps

1.3.1 Small centrifugal pumps for domestic water/heating/ sanitation applications

1.3.2 Domestic water supply pump packages

1.3.3 Small centrifugal pumps for machine tool cutting oil applications

1.3.4 Horizontal single-stage end-suction overhung impeller centrifugal pumps (for general purposes includes fixed irrigation pumps, EN 733 pumps)

1.3.5 Horizontal single-stage end-suction overhung impeller centrifugal pumps (for chemical applications includes ISO 2858, ISO 3069, ISO 3661, ASME/ANSI B73.1 designs)

1.3.6 Horizontal single-stage end-suction overhung impeller centrifugal pumps (for heavy-duty applications includes ISO 13709, API 610 designs)

1.3.7 Horizontal single-stage double-suction axially- split pumps (for general purposes)

1.3.8 Horizontal single-stage double-suction radially-split pumps (for heavy-duty applications includes ISO 13709, API 610 designs)

1.3.9 Horizontal two-stage end-suction overhung impeller centrifugal pumps

1.3.10 Vertical single-stage overhung impeller centrifugal pumps for general applications

1.3.11 Vertical single-stage overhung impeller centrifugal pumps (for chemical applications includes ASME/ANSI B73.2 designs)

1.3.12 Vertical multi-stage ntrifugal pumps for general applications (including segmental pumps, dH < 300 m, deep well ejector applications, wash water)

1.3.13 Vertical wet-pit pumps

1.3.14 Vertical dry-pit pumps

Self priming pumps

1.3.15 Marine pumps

1.3.16 Submersible pumps with electric motor

1.3.17 Non-electric submersible pumps

1.3.18 Submersible pumps for deep well applications

1.3.19 Portable self-priming pumps

1.3.20 Horizontal two-stage axially-split centrifugal pumps (includes ISO 13709, API 610 designs)

1.3.21 Horizontal two-stage radially-split centrifugal pumps (includes ISO 13709, API 610 designs)

1.3.22 Multi-stage segmental centrifugal pumps dH > 300m

1.3.23 Horizontal multi-stage axially-split centrifugal pumps (includes ISO 13709, API 610 designs)

1.3.24 Horizontal multi-stage radially-split centrifugal pumps (includes ISO 13709, API 610 designs)

1.3.25 Large vertical multi-stage centrifugal pumps (includes ISO 13709, API 610 designs)

1.3.26 Single-stage centrifugal pumps with integral gearing

1.3.27 Multi-stage centrifugal pumps with integral gearing

1.3.28 Centrifugal pumps for pulp

1.3.29 Centrifugal pumps for handling solids < 10 mm

1.3.30 Centrifugal pumps for handling solids > 10 mm

1.3.31 Non-clogging pumps

1.3.32 Submersible non-clogging pumps

1.3.33 Mixed-flow pumps

1.3.34 Axial flow pumps

1.3.35 Non-metallic rotodynamic pumps

1.3.36 Hygienic-quality rotodynamic pumps

1.3.37 Magnetic drive rotodynamic pumps

1.3.38 Canned motor rotodynamic pumps

1.3.39 Rotodynamic pumps without drivers (for specific applications including mobile agricultural applications and mobile fire pumps)

1.4 Special rotodynamic pumps

1.4.1 Peripheral pumps

1.4.2 Pitot tube pumps

1.4.3 Disc pumps

1.4.4 Pumps as power-recovery turbines

1.5 Positive displacement pumps

1.5.1 External gear pumps

1.5.2 Internal gear pumps

1.5.3 Archimedes screw pumps

1.5.4 Twin-rotor screw pumps

1.5.5 Triple-rotor and 5-rotor screw pumps

1.5.6 Twin-rotor geared-screw pumps

1.5.7 Progressive cavity pumps

1.5.8 Lobe pumps (including circumferential piston pumps)

1.5.9 Vane pumps

1.5.10 Peristaltic pumps(including rotary peristaltic pumps)

1.5.11 Rotary eccentric piston pumps

1.5.12 Axial and radial piston pumps

1.5.13 Inline piston pumps

1.5.14 Descaling pumps

1.5.15 Plunger pumps(includes horizontal and vertical)

1.5.16 Syringe pumps

1.5.17 Diaphragm pumps (includes mechanical and hydraulic actuation)

1.5.18 Air-operated double-diaphragm pumps

LIBERTY EXHIBIT 1014, Page 31

This book belongs to Robert Durham (rdurham@thewaylabs.com) Copyright Elsevier 2024

1.5.19 Metering pumps (flow within ± 0.1% to ± 3% with substantial dp changes)

1.5.20 Direct-acting reciprocating pumps (includes pneumatic, hydraulic and steam actuation)

1.5.21 Non-metallic positive displacement pumps

1.5.22 Sealless positive displacement pumps

1.5.23 Hydraulic motors

1.6 Other pump types

1.6.1 Ejectors

1.6.2 Barrel-emptying pumps (powered and hand pumps)

1.6.3 Hydraulic-ram pumps

1.6.4 Air-lift pumps

1.6.5 Contraction pumps

1.6.6 Macerators

LIBERTY EXHIBIT 1014, Page 32

This book belongs to Robert Durham (rdurham@thewaylabs.com)

Copyright Elsevier 2024

1.1 Introduction

There are many different pump types. Pumps operate via two basic principles, rotodynamic and positive displacement, but there are a few pump designs outside this categorisation.

NOTE: If the reader is unfamiliar with the concepts of 'rotodynamic' and 'positive displacement' then Chapter 4 should be reviewed before the pump types in this chapter are examined.

Rotodynamic machines try to be 'constant energy' devices but don't quite make it work because of the variable inefficiencies and the limitations of manufacturing. Positive displacement machines try to be 'constant flow' devices but don't quite manage to make it work because of the liquid properties and manufacturing requirements. But ! there is a special case when constant flow is achieved. The reader should know which concept is better for a particular application before reading **Chapter 1**.

All pumps are not equal ! There are a wide range of pump types because some designs are better; more efficient or more consistent or last longer; at handling specific operating conditions or specific liquid properties. Each application should be assessed individually, on merit, when considering:

- Liquid properties
- Allowable leakage
- Driver type
- Installation arrangement
- Operating efficiency required
- Duty cycle
- Allowable noise level
- Operational safety
- Site facilities and local staff capabilities

Remember, sometimes the liquid properties must be augmented with the properties of entrained solids, gases or vapour. Mixtures of liquids need all components defined in detail; very small concentrations can create corrosion problems. There are plenty of benign liquids which may be allowed to drip on the floor. Some liquids are so hazardous that the vapour must not be allowed to escape. Simple seals can be very small; complicated seals may require a lot of space plus an external system piped in. Not all pumps can accommodate complicated seals. Not all pump designs can accommodate complicated sealing system piping. It is not always possible to upgrade from a relaxed approach to leakage to strict leakage control; a change of pump type may be necessary if initial leakage requirements were wrong ! Remember, the entrained/dissolved gas may be much more of a hazard than the liquid !

Most pumps are driven by standard AC squirrel-cage motors. However, it may be advantageous to consider a steam or gas turbine for fast pumps. New motor designs, like switched reluctance, are very good for high speed but require a 'black-box' of electronics. Alternatively, an engine may be better for slow pumps. Steam or compressed air power supplies can be beneficial in a hazardous area. Don't forget about the installation arrangement until the last minute. A submerged pump or a vertical pump may provide the smallest installation footprint. Also remember, that poor piping design can have an adverse affect on performance, reliability and labour. Piping which is not self-venting and not self-draining may require physical attention during each start and stop. Consider the piping arrangement while thinking about the pump configuration ! Much time is wasted troubleshooting 'pumps' when it is the piping causing all the problems !

Efficiency can be very important for large pumps; large electricity bills ! Efficiency may be important when trying to find a pump to operate from a 13A socket or on a 12V or 110V supply. Some pump types are much more efficient than others. The duty cycle must be defined as it can significantly affect pump selection. Some pumps can operate continuously for ten years; other pumps need tender-loving-care after twelve hours. The pump duty cycle limitations may necessitate the installation of standby units.

Some installations require very quiet pumps. The noise of central heating pumps can sometimes be heard all over a building. Laboratories usually require very quiet pumps. Pumps, which are in close proximity to staff or the public, may have to be inherently safe. The site services obviously affect pump and driver selection. A steam turbine may be the preferred driver for the pump; not if there's no steam available. Larger pumps may need 3.3 kV or 6.6 kV power for the best motor sizing; there may be additional cost expenditure required at the substation. If the application warrants a complicated pump unit, can the local site personnel operate it safely and maintain it ? The supplier will be very happy to maintain it, at a cost. If the local site personnel don't understand the pump, or the process, the cost of maintenance may be much higher than expected !

When considering the information to be used to define the pump application it is very easy to spot 'maximums' and forget that 'minimums' might be just as important. It is worthwhile to take the time and consider that 'normal' might be much more important than the occasional 'maximum' or 'minimum'. It might be very worthwhile to consider the duration of 'maximum' or 'minimum' in the context of long-term 'normals'. Unless specifically defined to the contrary, the pump supplier will assume all process changes occur slowly; any rapid changes must be described in detail!

When the pump application is initially considered, any applicable specifications, standards or regulations must be listed for discussion. Important factors, based on either the liquid or the installation, can have a significant impact on pump selection, pump design and other equipment selection. Remember in Europe, that ATEX regulations apply to mechanical equipment such as pumps and gearboxes, as well as motors. Size, that is much bigger size, may be required for compliance. Many specifications, standards and regulations cannot be applied retrospectively because of the effect on equipment selection.

1.2 Checklist of pump terminology and definitions

Modern communication can be very difficult. English is the de facto standard language for technical subjects BUT there are different versions of English! American English is different to UK English. Many versions of English have been developed by engineers who use English as a second language.

In the pump industry, users and manufacturers often refer to or call a pump type by different names! This is inevitable given the range of pumps and the immeasurable number of process applications in which they are used. The same applies to pump terminology. This terminology or "jargon" can be very confusing and indeed often misleading.

This Section attempts to highlight a few things to watch out for and provides an explanation of and gives guidance on some of the more important key pump terms and descriptions that occur in daily pump usage many of which are referred to within this book.

Barrel pump - radially-split centrifugal pump.

Bearing bracket - the structural component which houses the pump bearings.

Bearing pedestal - bearing bracket.

Boiler feed pump - usually a multi-stage centrifugal pump feeding treated water.

LIBERTY EXHIBIT 1014, Page 33

This book belongs to Robert Durham (rdurham@thewaylabs.com)

Copyright Elsevier 2024

Booster pump - two different common uses. In hydraulic fluid power, a booster pump takes a high pressure and increases it significantly. In process pumps, a booster pump is used where there is insufficient pressure to supply adequate NPSH or NPIP. The booster pump provides a small increase in pressure so the main pump can operate reliably.

Dead head - closed valve head (do not assume a rotodynamic pump will run successfully at this condition!).

Duty cycle - how the pump will be operated with reference to time.

Eccentric screw pump - progressive cavity pump.

Ejector - jet pump.

Fire pump - a pump used to pressurise water for fire-fighting. (Considered an intermittent application).

Flooded suction - an imprecise term to be avoided; specify the suction head/pressure and NPSHa/NPIPa.

Fluid - not necessarily liquid; use very carefully; this term is not interchangeable with liquid!

Head - a measure of energy in a rotodynamic pump system.

Heat pump - a system with a compressor.

Helical gear pump - progressive cavity pump.

Helical rotor pump - progressive cavity pump or a screw pump.

Helical screw pump - progressive cavity pump.

Hydraulic motor - a positive displacement machine which extracts energy from liquid.

Hydraulic turbine - a rotodynamic machine which extracts energy from liquid.

Inline pump - a pump casing design where the suction and discharge pipes are on the same centre-line; concentric, but on opposite sides.

Injector - jet pump.

Liquid ring pump - a compressor.

Modular multi-stage pump - segmental pump.

Monoblock pump - a pump which utilises the motor bearings for radial support and axial alignment.

Motor stool - the structural space which supports a vertical electric motor.

Mud motor - a progressive cavity pump extracting energy from drilling mud.

NPIPa - see Section 4.4 of Chapter 4.

NPIPr - see Section 4.4 of Chapter 4.

NPSHa - see Section 4.4 of Chapter 4.

NPSHr - see Section 4.4 of Chapter 4.

Pinion pump - gear pump.

Pipeline pump - a pump used to move liquid over considerable distance, perhaps 1000 km.

Pressure - a measure of energy in a positive displacement pump system.

Priming - filling a pump with liquid prior to starting.

Pump package - sometimes used when more than one pump is built on a baseplate. Also used when multiple pumps are driven from one gearbox.

Pump unit - the pump plus any power transmission equipment and the driver; everything mounted on the baseplate.

Reciprocating pump - a type of positive displacement pump which cannot run in reverse.

Ring section pump - segmental pump.

Rotary pump - a type of positive displacement pump utilising rotating elements.

Rotodynamic pump - a type of pump which adds rotating kinetic energy to the liquid then converts to static head.

Self-priming - a pump which can remove gas from the suction piping and not run dry.

Side channel pump - peripheral pump.

Snore - the ability to run dry then self-prime when liquid is present.

Suction stage - first stage.

Siphoning - liquid flowing through the pump when the pump is stationary.

Turbining - a pump running backwards and acting as a turbine.

Vacuum pump - a compressor.

Venting - removing air and/or gas from a pump prior to starting.

Vertical turbine pump - a vertical multi-stage pump probably with mixed-flow impellers.

Waste water pump - vague! Could be surface water, dirty water or foul water (sewage).

1.3 Rotodynamic pumps

1.3.1 Small centrifugal pumps for domestic water/heating/sanitation applications

There are specially developed pumps, so-called heating, water and sanitation pumps for the different pumping requirements in buildings. One of their general characteristics is a low noise and vibration level, the requirements varying in accordance with the size of the building from a noise level of approximately 25dB(A) for a private house, to approximately 65 dB(A) for pumps placed in a well insulated machine room in a larger building. These different pump requirements are covered by:

- Heating circulation pumps for circulating water in a central heating system. Smaller sizes up to a power requirement of normally 100W are of the wet type, i.e. wet rotor motors, Figure 1.1. All the rotating parts, including the motor rotor are sealed inside a stainless steel can. The stator windings are placed around the outside of the can and the rotating

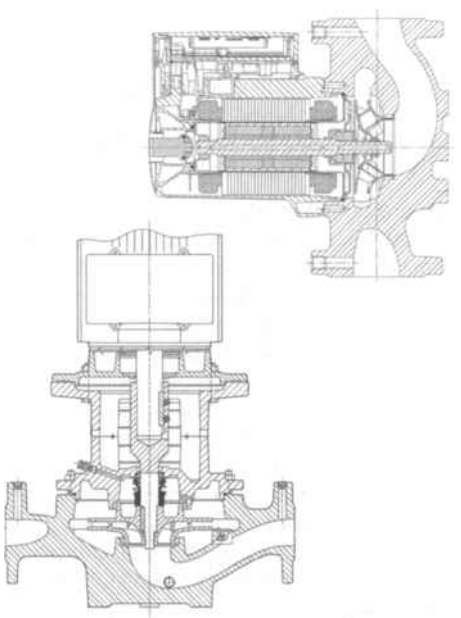

Figure 1.1 Central heating circulator pumps with inline connections. The upper illustration is the "wet" type. The lower illustration is the conventional dry motor

Courtesy of Grundfos

LIBERTY EXHIBIT 1014, Page 34

This book belongs to Robert Durham (rdurham@thewaylabs.com) Copyright Elsevier 2024

Figure 1.2 Heating circulation pump of the twin design
Courtesy of Grundfos

magnetic field passes through the can wall. No seals are necessary; the bearings are usually ceramic lubricated by the hot water. Pump casings are usually cast iron or aluminium alloy with bronze or stainless steel impellers. The pumps are mass produced with fixed performance, but in order to match the circulator to the system and avoid noise in the piping system, they are supplied with a two or three speed motor.

- So-called twin pump packages, i.e. a pump casing with two pumps built as a unit ready for installation in one suction and discharge pipe. The pumps can be operated together for parallel operation, see Figure 1.2, or series operation. The unit includes a non-return valve system, controlled by the flow of liquid so that either pump can be operated independently or together with the other pump.
- Hot water pumps for circulating domestic hot water in larger buildings so that the hot water is almost immediately available when the tap is turned on. In contrast to central heating pumps the parts in contact with the fluid are made of bronze or stainless steel instead of cast iron. Wet motors are available, as well as dry motors using special designs for motor and shaft seals in order to avoid blockages due to furring or deposition of the natural salts.
- Other pumps in buildings are pressure boosting pumps, (see multi-stage pumps, ground-water pumps and to some extent also standard water pumps for fire systems).
- Complete pump packages are supplied in buildings with water central heating systems, to maintain the static pressure in the heating circuit and make up any leaks.

Most of these pumps are of the inline design. The pump and motor form an integral package and the suction and discharge connections are inline so that the package can be fitted into a straight pipe run. Most pumps do not require external support but rely entirely on the rigidity of the pipework. Pumps can be mounted with the motors vertically or horizontally. In most designs the pump cannot be mounted vertically above the motor.

BS 1394 should be reviewed for relevant requirements. EN 1151 specifies the European requirements for circulating pumps. Electrical safety requirements are given in Chapter 17, Section 17.1.4.

1.3.2 Domestic water supply pump packages

Automatic water packages are used for supplying drinking water to households and properties which are not connected to the national water distribution network. The water is normally taken from a well with a suction lift for the pump of 3 to 7 m. The pump's flow and head are suitable for 1 to 3 outlets connected to the pump by relatively short pipes or hoses.

The package consists a self-priming pump, (centrifugal or liquid ring type), an electric motor, an accumulator (pressurised holding tank) and usually a pressure switch. The pressure switch ensures that the pump starts when the pressure falls due to water being drawn off and stops when the accumulator has filled up due to the corresponding increase in pressure.

There are many different makes and models available as illustrated in Figure 1.3. When purchasing, account should be taken

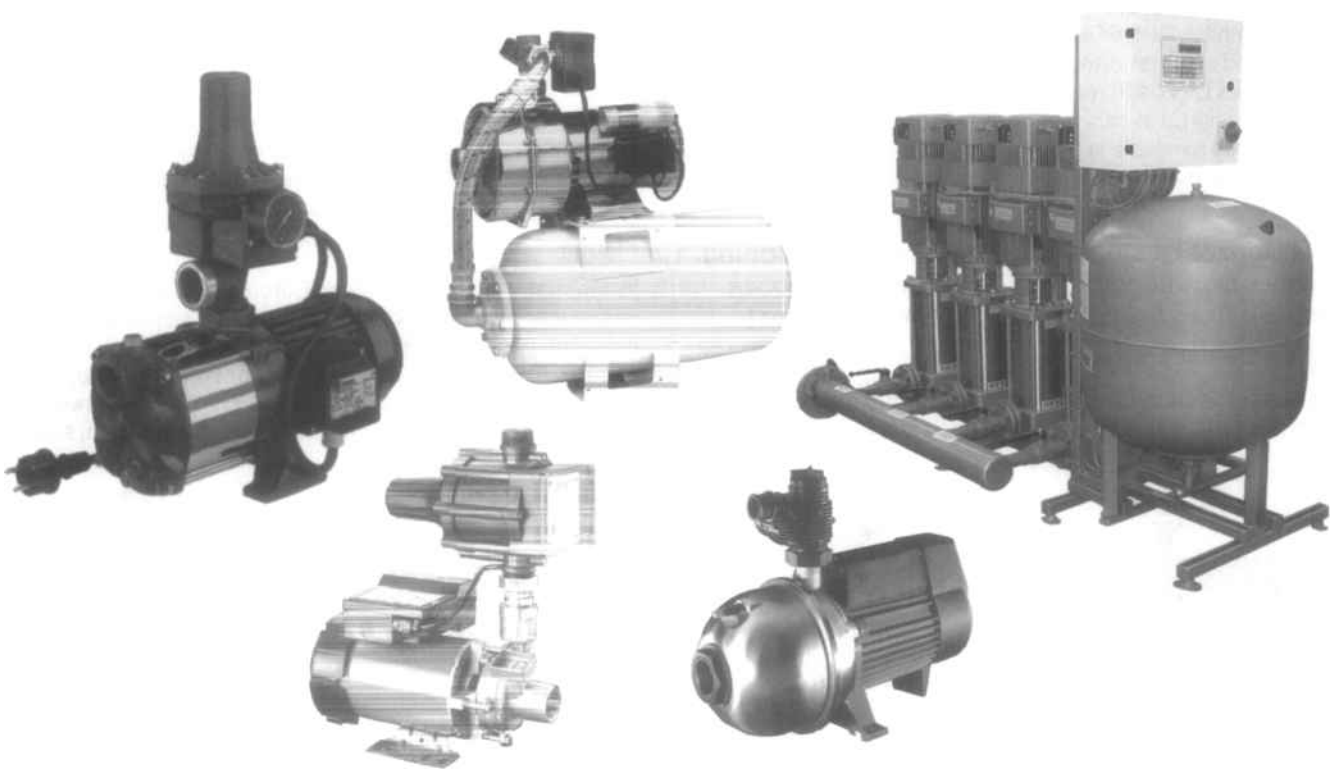

Figure 1.3 Automatic water supply packages - a selection of models (Top right hand illustration - *Courtesy of AquaTech Ltd*)

This book belongs to Robert Durham (rdurham@thewaylabs.com) Copyright Elsevier 2024

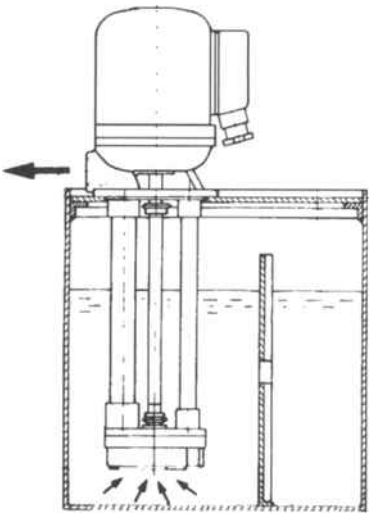

Figure 1.4 Coolant pump for machine tools

of the noise level as well as the fact that the water package should fulfil current electrical, hygienic, and legal requirements.

1.3.3 Small centrifugal pumps for machine tool cutting oil applications

Special pumps are used for pumping coolant/cutting oil, or White Water, for machine tools, lathes, grinding machines, etc. The liquid can be a specially blended oil or an emulsion of it in water, the oil content being from 2% to 15%. The flow usually varies between 0.3 and 20 m^3/h with heads varying between 2 and 20m. This type of pump is standardised in Germany in accordance with DIN 5440. This standard indicates both performance and those dimensions which have an influence on interchangeability. The pump unit is constructed so that the pump casing is submerged in the liquid with the motor placed outside the tank, Figure 1.4. The immersed depth is up to 500 mm. Due to this construction, no shaft seal is required.

BS 3766:1990 specifies ten sizes in the form of dimensions and minimum performance characteristics for vertical top and side mounted units. DIN 5440 specifies six pump sizes in submerged and external forms. The French Standard, NF E44-301 incorporates DIN 5440 requirements. Normally coolant pumps are manufactured in cast iron or aluminium alloy but there are special types available in plastic. EN 12157, includes six sizes of pumps, from 1.5m^3/h to 15 m^3/h, for depths from 90 mm to 550 mm.

1.3.4 Horizontal single-stage end-suction overhung impeller centrifugal pumps (for general purposes includes fixed irrigation pumps, EN 733 pumps)

Standard water pumps

These are pumps designed to operate with clean water, at temperatures up to 80/120 °C. They are used for clean liquids compatible with cast iron and in some special cases bronze. Impellers may be cast iron, bronze or plastic. Small pumps will generally not have wear rings. A wide range of styles and designs is available, nevertheless, a classification into main categories can be made in accordance with Figure 1.5.

Compact pumps with the impeller mounted directly on the motor shaft end, close-coupled, are suitable for flows up to a maximum of approximately 300 m^3/h and for differential heads of up to 100m. Casing pressure ratings can be up to 10 barg. Motor output can be over 100 kW however, motors exceeding 20 kW will require lifting facilities. Close coupled pumps rely on the motor bearings to absorb axial thrust and radial loads. Suction pressure may be restricted. Most of the hydraulics specified in Section 1.3.4 for EN 733 pumps are also available in close coupled units which do not comply with the dimensional part of the Standard.

Smaller vertical compact pumps can often be mounted directly in pipework without supports, this of course assumes that the pipework has sufficient rigidity. Larger vertical compact pumps have a foot to rest on a support. Normally the pump can be mounted at any angle, with the exception that the motor must not be located under the pump because of the risk of motor damage in the event of seal leakage. Mounting, other than vertical, can cause maintenance problems. Small pumps may have female screwed connections as an alternative to flanges. Space around the stuffing box is restricted and the choice of packing and seal arrangements will be limited.

Pumps with bearing brackets, housing their own radial and axial bearings, are available to cover most of the operational range of close coupled pumps. Pumps with bearing brackets will not have the same restrictions on suction pressure and sealing arrangements. Somewhat larger pumps are produced in this configuration. A coupling is required between pump and motor as is a baseplate for horizontal units. These units are slightly longer than the equivalent compact close coupled pump but more versatile. Some pumps are designed to be back-pull-out; the complete rotating assembly plus the bearing bracket can be removed leaving the casing connected to the pipework. If a spacer coupling to the motor is used, the pump can be maintained without disturbing the pipework or the motor. These pumps are capable of 2000 m^3/h at differential heads of 160 m and pressure ratings up to 16 barg.

EN ISO 9908 could be useful for both horizontal and vertical pump requirements. BS 4082 could be useful for vertical pump requirements. Stuffing box and seal cavities should comply with ISO 3069.

Standard pumps to EN 733

In Germany and a few other European countries for many years, there were standardised pumps for non-hazardous liquids. The German Standard DIN 24255 was probably the most popular. The German Standard has been replaced by a very similar European Standard, EN 733. The Standard relates to foot mounted horizontal pumps with a bearing bracket, see Fig-

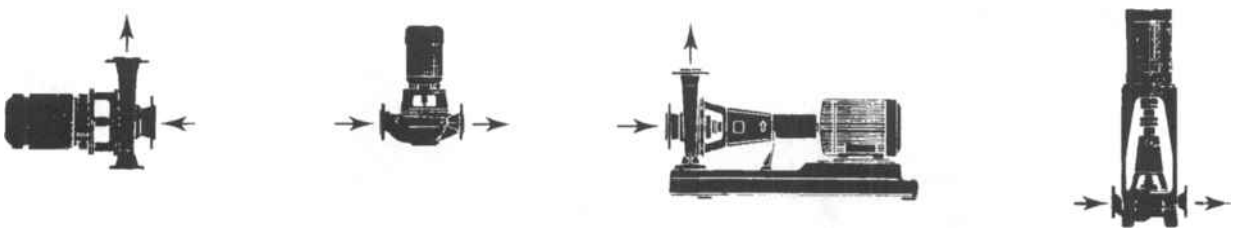

Horizontal compact pump with impeller mounted on the motor shaft (close coupled). End suction, top discharge; central or tangential.

Vertical compact pump with impeller mounted on the end of the motor shaft (close-coupled). Inline connections.

Horizontal pump with bearing bracket mounted with motor on baseplate. End suction, top discharge; central or tangential.

Vertical pump with support feet, bearing bracket and extended motor stool for spacer coupling. Inline connections.

Figure 1.5 Various designs of standard pumps

LIBERTY EXHIBIT 1014, Page 36

This book belongs to Robert Durham (rdurham@thewaylabs.com) Copyright Elsevier 2024

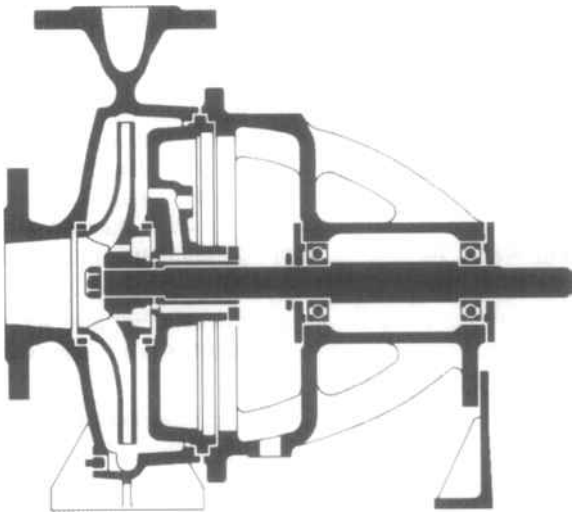

Figure 1.6 A pump in accordance with EN 733

Figure 1.7 A small pressed/fabricated stainless steel pump

ure 1.6, and a back-pull-out facility when driven via a spacer coupling.

The Standard does not define materials of construction, only performance and physical dimensions. The Standard comprises a total of 29 sizes with discharge connections from 32 up to 150 mm. The nominal performance at BEP specifies flow of 6 to 315 m^3/h and the differential head of 5 to 80 m. The pump casing must have a pressure rating of 10 barg. The pump's design, Figure 1.6, consists of a system of units based on three basic shaft sizes.

The pumps are generally built with cast iron casings, cast iron or bronze impellers and stainless steel shafts. Some manufacturers have bronze and steel casings available, as well as plastic impellers. The space, allocated for soft packing and mechanical seals, is small, limiting the use of the pumps to non-hazardous liquids. The intent of the Standard was to allow interchangeability between manufacturers, equipment and provide the user with greater choice. EN 735 lists the tolerances on pump dimensions to ensure interchangeability.

Figure 1.7 shows a small pressed/fabricated stainless steel pump. This style of construction allows very thin walls to be used and hence minimising material costs. Exotic materials can be used providing suitable rolled sheet is available. Of course, initial production costs are high because press tools are very expensive. Many pumps must be produced to recover the tooling costs. Hydraulics from popular standards, such as EN 733, are used to ensure sales into existing markets.

Fixed irrigation pumps

Irrigation and other agricultural applications make use of different pumps depending upon the location and what power sources are available. Permanent surface installations normally have single-stage pumps in accordance with Section 1.3.4 or multi-stage pumps in accordance with Sections 1.3.12 and 1.3.21. When wells have been sunk, submersible deep-well pumps in accordance with Sections 1.3.13, 1.3.18 and 1.6.3 are used. The drive is generally an electric motor although diesel or LPG operation are alternatives. Some large installations in very remote locations use crude oil burning engines or natural gas. The required pump performance depends upon the type and size of the installation. Normal duties lie within the range 10 to 100 m^3/h with heads of the order of 50 to 120m.

1.3.5 Horizontal single-stage end-suction overhung impeller centrifugal pumps (for chemical applications includes ISO 2858, ISO 3069, ISO 3661, ASME/ANSI B73.1 designs)

ANSI, the American National Standards Institute, has a philosophy more similar to DIN than ISO in that it specifies materials and mechanical seal options. B73.1 is a standard for single stage centrifugal pumps, with back pull-out, intended for chemical and corrosive duties. Construction is similar to Section 1.3.21. The Standard specifies bareshaft pump dimensions, also installation dimensions for complete packages with motor and baseplate. The Standard does not specify hydraulic duties. Mechanical seal arrangements, with various piping plans, are detailed to cover most applications.

Depending upon materials and cooling arrangements pumps must be suitable for at least 260 °C. The Standard specifies material columns with casings in:

- Cast iron
- Ductile iron (spheroidal graphite iron)
- Carbon steel
- Alloy steel
- 18-8 stainless steel
- 18-10-2 stainless steel

Many manufacturers can supply pumps in more exotic materials such as; Carpenter 20, Hastelloy B & C, duplex stainless steels; as well as non-metallic materials like glass reinforced polymer. The Standard requires a corrosion allowance of 0.125", 3 mm.

Pump sizes vary from 11/2 to 10 suction connections with flanges to ANSI B16.1, B16.5 or B16.42. Impeller diameters range from 6" to 15". At 3600 rpm, pumps are capable of 1680m^3/h at heads up to 300m. At 3000 rpm the performance falls off slightly to 1400 m^3/h at 208 m. ANSI does specify pressure ratings for the pumps; 125LB/150LB flange rating, 12 barg and 20 barg. An option for 250LB/300LB flanges is given.

The Standard specifies a minimum bearing life of 17500 hours at maximum load conditions. On test, with a speed of ± 10% of operating speed, the peak velocity of vibration shall not exceed 0.25 in/s, 6.35 mm/s.

End-suction pumps can suffer high axial thrust due to high suction pressure. Shortened bearing life may result. Manufacturers should confirm the bearing life if it is less than the standard requirement.

ISO has prepared a standard recommendation, ISO 2858 for end-suction centrifugal pumps, pressure rating PN 16 (maximum pressure 1.6 MPa = 16 barg). This is included in British Standard EN 22858 and equivalent to the German Standard DIN 24256. The Standard specifies the principal dimensions

This book belongs to Robert Durham (rdurham@thewaylabs.com) Copyright Elsevier 2024

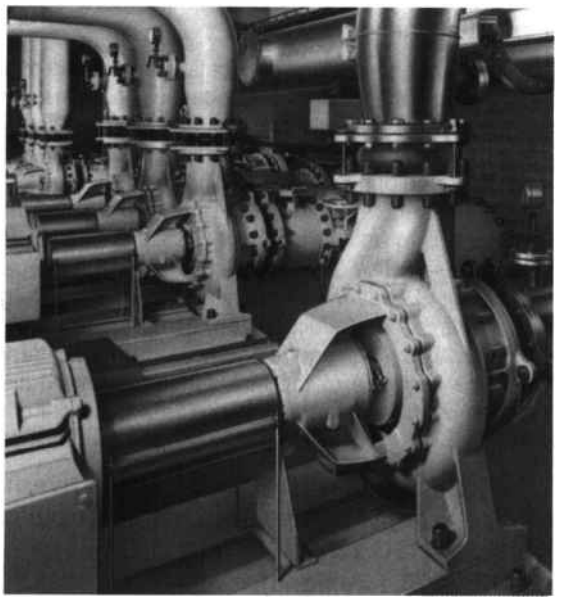

Figure 1.8 Typical standard ISO 2858 pumps

and nominal duty point. Figure 1.8 shows typical standard pumps.

General note on ASME/ANSI Standards

The ANSI B73 Standards were produced in response to requests by users to standardise manufacturers products for the chemical industries. The end-suction pump Standard was introduced in 1974 and the vertical inline in 1975. The standards were based on recommendations by users but compiled by a committee of mostly manufacturers. There are many American chemical installations worldwide and manufacturers and users should be aware of these standards.

General note on ISO 13709 and API 610

API is the American Petroleum Institute which is predominantly a trade association of pump users concerned with oil and gas production and refining. Pump manufacturers are represented on the API committees but are outnumbered by the users.

For example, API 610 specifications have a complete section for Vendor's Data; they do not have a section for Purchaser's Data. API is a long established organisation and has a large catalogue of specifications, publications and recommended practices. Since American technology is used worldwide in oil and gas related sectors, it is logical to use proven methodology where appropriate.

API 610 is a mature specification currently up to the eighth edition published in August 1995. API is unlike the majority of DIN, and EN pump standards in that it is more a philosophy to achieve results rather than instructions. It is not a dimensional standard which would allow interchangeability between manufacturers. It does contain requirements but also many by agreements which are frowned upon by European standards authorities because of the lack of control and uniformity. However API 610 does specify materials of construction. API and ISO have collaborated on a new ISO Standard, ISO 13709.

The first two requirements are a 20 year service life and the capability of three years uninterrupted operation. API does follow these requirements with a statement that these are design criteria. From a European viewpoint both are not verifiable and are application specific. Bearing this in mind, API 610 pumps are heavier and more robust than most other pump designs, no pressure or temperature limitations are specified, and are suitable for the most arduous duties. Drain rim baseplates are standard and most pumps are centre-line mounted to reduce alignment problems caused by thermal growth. Allowable forces and moments on process nozzles are large necessitating substantial baseplates. Pump selection is guided by a requirement to have BEP between the normal operating point and the rated duty point.

API 610 specifies the size of seal cavities and the distance to the closest obstruction and specifies mechanical seals, single balanced, as a minimum. The space available allows for complex double or tandem seal arrangements. The Standard requirement is for mechanical seals and systems to comply with ISO 21049/API 682. Arrangements for other auxiliary piping, cooling water for seals, bearing housings, jackets and pedestals, are also shown in API 610.

Spacer couplings are standard with a minimum spacer length of 127mm. Bearings, seal(s) and rotor must be removable without disturbing the driver or the casing.

API 610 specifies 11 material columns covering the following range of casing materials:

- Cast iron
- Carbon steel
- 12% chrome steel
- 18-8 stainless steel
- 18-10-2 stainless steel

Although cast iron is specified as an acceptable material the lowest specification applied in practice is carbon steel. It is very unlikely that cast iron casings could support the nozzle load requirements.

1.3.6 Horizontal single-stage end-suction overhung impeller centrifugal pumps (for heavy-duty applications includes ISO 13709, API 610 designs)

These are the most popular style of process pumps. Basic pump design is similar to EN 733, Section 1.3.4 and ISO 2858, Section 1.3.21, with a back pull-out feature. In practice, the minimum material readily available is carbon steel. Some manufacturers will make specials in bronze when commercially attractive. Standard flanges are inch to ANSI standards, B16.1, B16.5 or B16.42. Both suction and discharge flanges must be the same pressure rating. Rolling bearings, typically ring oiled, are supported in a cast housing bolted to the stuffing box or casing. Bearing housings are steel for hazardous liquids.

Pumps are available with flows over 2000 m^3/h at differential heads of 300 m. Operating temperatures from -30 to 425 °C are common, down to -180 °C is possible. Popular pumps range from suction branch sizes of 2" to 12". Pressure ratings of smaller pumps are up to 100 barg reducing to 40 barg for the larger sizes. Pressure/temperature rating variations with materials are important, so check flange specifications.

1.3.7 Horizontal single-stage double-suction axially-split pumps (for general purposes)

Thirty-five years ago the double suction pump was the predominant water pump for applications where the pipe size exceeded 200 mm. The classic design with a large impeller between two

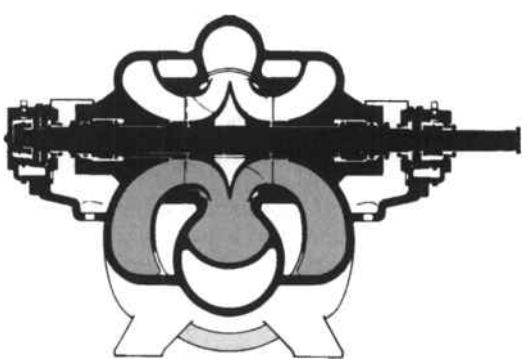

Figure 1.9 Double suction axially-split pump with sleeve bearings and tilting pad thrust

LIBERTY EXHIBIT 1014, Page 38

This book belongs to Robert Durham (rdurham@thewaylabs.com) Copyright Elsevier 2024

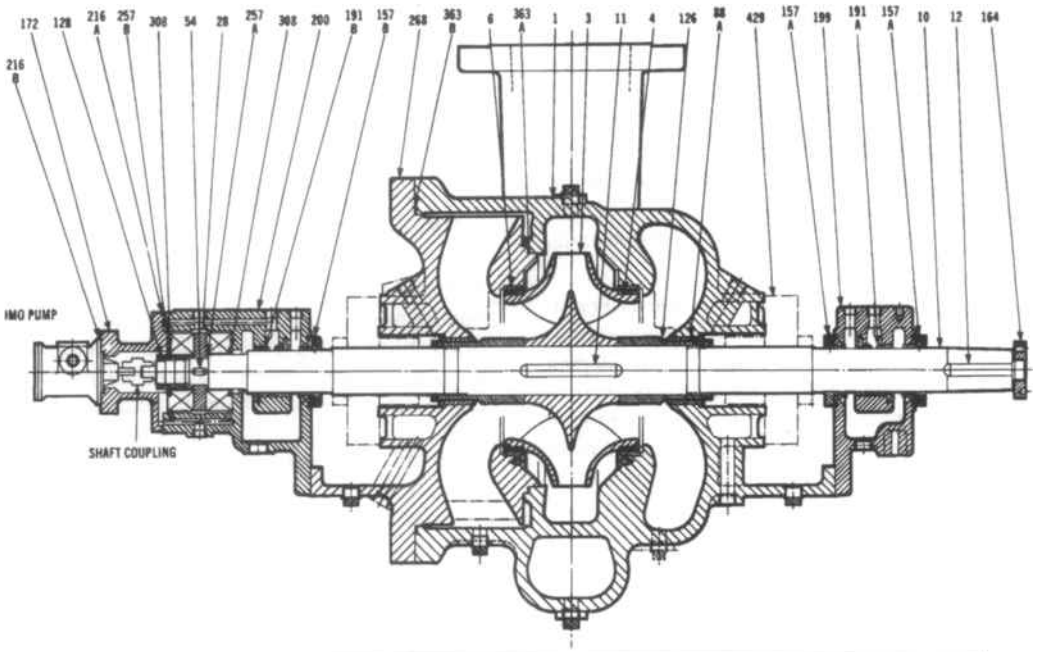

PART NO	NAME OF PART	PART NO	NAME OF PART	PART NO	NAME OF PART
172	SUPPORT HEAD	12	COUPLING KEY	308	SEALING RINGS-THRUST BAG
164	COUPLING NUT	11	IMPELLER KEY	268	SUCTION END BRACKET
157B	FLINGER-THRUST BRG.	10	SHAFT	257B	SHIMS-THRUST BRG. TO SUPPORT HEAD
157A	FLINGER-PLAIN BRG.	6	CASING RING	257A	SHIMS-THRUST COLLAR
128	LOCKNUT	4	IMPELLER RING	216B	GASKET-IMO PUMP TO SUPPORT HEAD
126	IMPELLER LOCKNUT	3	IMPELLER	216A	GASKET-SUPPORT HEAD TO THRUST BRG.
88A	STUFFING BOX BUSHING	1	CASING	200	BEARING BODY & CAP-THRUST
54	THRUST COLLAR KEY	429	MECHANICAL SEAL-COMPLETE	199	BEARING BODY & CAP-PLAIN
28	THRUST COLLAR	363B	GASKET-SUCTION END BRACKET (OUTER)	191B	BEARING LINING-THRUST
		363A	GASKET-SUCTION END BRACKET (INNER)	191A	BEARING LINING-PLAN

Figure 1.10 Double-suction process pump to API 610/ISO 13709

bearings, two stuffing boxes and axially-split pump casing with the pipe connections in the lower half, Figure 1.9, is still used for large flows at low heads. The design is normally used for large and very large water services pumps, for example, clean water pumps for large water works and distribution pumps for industrial water.

The specific speed per impeller, half for double suction impeller type pumps, is less than that of similar single suction pumps and this results in a corresponding flattening of the H-Q curve. In borderline cases the lower NPSHr value means that higher speeds can be used. In special instances where it is desirable to maintain as near pulsation-free flow as possible, as for example, fan pumps for paper machines, double suction pump impellers with staggered blades are used. Sometimes the location of the pump connection flanges can make the use of a double-suction pump advantageous.

Water temperature can be up to 120 °C with standard cast iron casings. Special bronze casings are sometimes supplied for seawater applications. Impellers can be cast iron or bronze. Pumps with 250 mm connections can handle 1200 m^3/h at 100m. Larger pumps are available for up to 40000 m^3/h at 40m. Small pumps have pressure ratings of up to 17 barg reducing to 5 barg for the largest sizes. Power requirements are up to 5.5 MW. Packed stuffing boxes or mechanical seals can be fitted as options.

This style of pump has been available in the past in two slightly different two-stage versions. A two-stage pump with single entry second stage was used as a condensate extraction pump for steam turbo-generators. The pump grew to unmanageable proportions in the 1960s as generators became much larger. The design concept changed and the condensate extraction pump became a vertical multi-stage pump. A two-stage pump with two double entry impellers has also been available, particularly in the United States. This style of pump was designed when axial thrust was not fully understood and resulted in a hydraulically balanced rotor. Neither of the two-stage designs described here are popular currently in pump applications.

1.3.8 Horizontal single-stage double-suction radially-split pumps (for heavy-duty applications includes ISO 13709, API 610 designs)

This pump, see Figure 1.10, is not as popular as the end-suction pump. It is similar in some respects to Section 1.3.7 pumps but has centre-line mounted radially split casings. Generally with top-top process connections, but side-side and other variations are available. The double entry impeller mounted between two bearings. Rolling bearings are standard, sliding bearings and various lube oil systems can be made to order. The mechanical seals can be serviced by removing the coupling and bearing housings. A spacer coupling is required. The rotor assembly is withdrawn from the casing, away from the driver.

These pumps tend to be slightly larger than the end-suction pumps. Flows over 5000 m^3/h are possible at heads up to 500 m. Suction sizes from 8" to 16" are popular with pressure ratings up to 60 barg. Materials and flanges are similar to Section 1.3.6 types.

1.3.9 Horizontal two-stage end-suction overhung impeller centrifugal pumps

These pumps are a logical extension to the single-stage pumps described earlier. The design problem to overcome is shaft deflection. The weight of both impellers is cantilevered from the front bearing. Also remember that some space must be left for shaft sealing, further increasing the overhang. Pumps for benign liquids, in days past, could be sealed by a simple soft-packed arrangement. This simple, but very effective arrangement also provided a useful degree of support and damping for the shaft. These effects helped to minimise vibration.

The primary disadvantage to soft-packing is the skill required to pack a box, run the packing-in, and then nurture the packing

This book belongs to Robert Durham (rdurham@thewaylabs.com) Copyright Elsevier 2024

throughout its useful life with tender loving care. These skills are disappearing and there is no time, now, to bed packing-in properly followed by almost continuous adjustment. The modern mechanical seal is seen as a gift from heaven for accountants, but provides no shaft support and no damping. Shaft diameters must be increased to limit shaft deflection and to increase critical speeds. There is a point reached, when shaft diameter increases, that a between-bearing pump is almost cost comparable ..... except that it has two mechanical seals, **not one**!

Figure 1.11 shows a novel approach to the two-stage concept. The first stage is mixed-flow rather than truly radial. This combination allows the return passage of the diffuser to be slightly smaller than the tip diameter of the second radial stage. The design produces an effective back pullout assembly which greatly enhances maintainability, leaving the casing in situ and process connections undisturbed. Both stages have front and back wear rings; these will provide some dynamic stability as well as reducing internal leakage. This style of pump is aimed at the process industries, particularly paper making. These pumps, in super-duper 25Cr 5Ni 2Mo, can handle 1080 m^3/h and produce differential heads of 220 m. The casings are designed to cope with 25 barg and 180°C.

The two-stage overhung pump is vigorously disliked by API and many in the Oil & Gas industry. This is probably due to past failures and unreliability. The Oil & Gas industry was renowned though for getting duty conditions wrong in the past, and this pump design may have attracted an unwarranted reputation. This style of design will be susceptible to vibration, rubbing and seizure when operated well away from BEP, if gas slugs pass through and if started without being primed properly. All of these happen regularly in the Oil & Gas environment. These pumps would tend to fair much better when not used for water and selected for a minimum viscosity 4 cSt. The wear rings would perform as much better bearings.

Future developments will probably centre on enhanced bearing materials for the wear rings; the first stage wear rings at least.

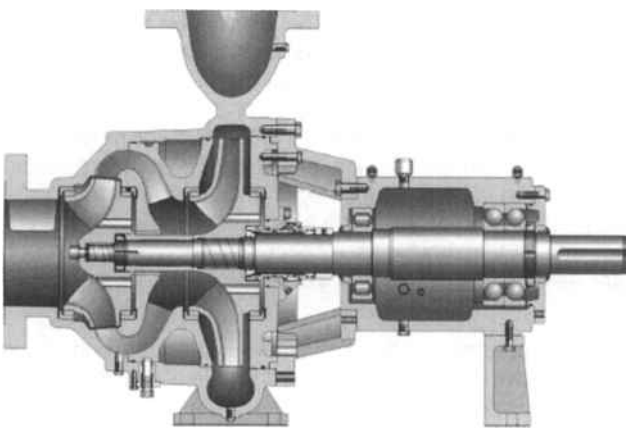

Figure 1.11 A horizontal two-stage end-suction pump
Courtesy of Sulzer Pumps

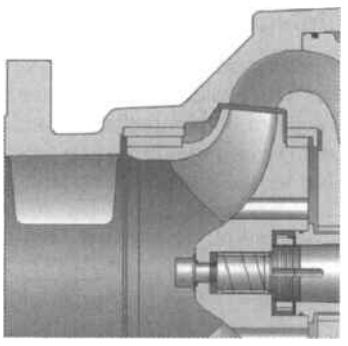

Figure 1.12 Wear rings for better bearing performance

Improved bearing performance will allow larger pumps to run successfully. Figure 1.12 shows a style of wear ring which may become common. Alternatively, a ceramic rolling-contact bearing may be a more reliable option for very clean liquid applications.

1.3.10 Vertical single-stage overhung impeller centrifugal pumps for general applications

Vertical single-stage pumps, pumps which have a suction connection and are not submerged, fall into two basic design types. Some pumps use standard electric motors and have flexible couplings. These pumps have radial and thrust bearings in the pump. The other pump design requires a special electric motor; an electric motor with a thrust bearing. The pump includes a radial bearing but relies on the electric motor for axial setting. Also available, is an almost off-the-shelf horizontal end-suction pump which is mounted vertically. A short, bent pipe section is attached to the usual suction connection to obtain the 'inline' configuration. Vertical single-stage pumps in this category are similar to central heating circulators ..... but ! the pump must be supported! The pump does not hang in the pipework; they are too heavy for that.

Pumps with a bearing bracket follow the design rules of horizontal end-suction pumps and use a number of the same parts. A motor stool is used to support the flanged motor from the pump. These pumps can save floor space but the piping arrangement must be appropriate. Small pumps can handle 400 m3/h while the largest pump can pass 3500 m^3/h. Differential head can be from 230 m to 900 m. Some pumps can cope with quite cold liquid, down to 185°C, and up to about 400°C. Pressure ratings can be light, 24 barg, to heavy-duty, 100 barg. These pumps can utilise the flexible coupling of purchaser's choice. A wide range of material combinations is possible to suit most applications. Mechanical seal chambers may comply with ISO 21049/API 682 requirements. There are mag-drive versions available when leaks are intolerable.

The pumps without a bearing bracket, like their horizontal equivalents, produce a very small, neat package. Thrust bearings in the motor absorb the pump axial thrust and locate the impeller in the casing. Motor bearings will usually be grease-lubricated and can be regreased while running. The motor can have a special extended shaft for mounting the impeller directly, or be connected via a solid muff coupling. The coupling can incorporate the pump axial setting adjustment. Space for a mechanical seal is likely to be restricted; double seals with "bells and whistles" might not be possible. Benign liquids, with just traces of hazardous/toxic compounds, might be out-of-bounds. However, it is possible to squeeze a lot out of these little packages; variable speed motors are becoming more popular. Matching the pump to the process conditions, to save energy, is worthwhile economically. Speeds up to 8000 rpm are possible.

Small pumps are limited to 25 m^3/h at differential heads up to 600 m. Larger pumps can handle 500 m3/h with slightly less head rise, 275 m. Casing design pressures of 40 bar(g) are typical and designs cope from -40 to 400°C.

One of the most prevalent problems associated with these pumps, is poor piping layout. It is not unusual to see these pumps in a dogleg from a long, straight, pipe run. The straight length of pipe on the suction connection is usually too short; 5D is the rule-of-thumb for a minimum. Increased turbulence in the impeller produces vibration leading to wear and short bearing life. In a number of cases, the vertical pump was the wrong style for the equipment layout; an end-suction pump would have better!

LIBERTY EXHIBIT 1014, Page 40

This book belongs to Robert Durham (rdurham@thewaylabs.com) Copyright Elsevier 2024

1.3.11 Vertical single-stage overhung impeller centrifugal pumps (for chemical applications includes ASME/ANSI B73.2 designs)

There is some confusion regarding the style of inline pumps. Inline construction requires the suction and discharge connections to be concentric; that is the longitudinal centre-line of the suction pipework is also the longitudinal centre-line of the discharge pipework. Imagine a straight length of pipe; if a section of pipe is removed an inline pump can replace the pipe section. Some standards, like BS 4082 U style, have both pump connections on one side of the pump; this cannot be an inline pump. The pump flanges may be specified as identical sizes and rating. There may be disadvantages to using the same schedule pipework on the suction as the discharge.

The basic philosophy of vertical inline pumps is identical to pumps in Section 1.3.1. The pump is mounted in the pipework and is not bolted down to foundations. ANSI B73.2 pumps are larger than these, all pumps must be mounted with the motor vertically above the pump and the pump can be optionally supported by a stool. The weight of the pump package is supported by the stool but the pump is free to move to accommodate pipe movement. The Standard is dimensional, to allow interchangeability between manufacturers, but does not specify hydraulic performance. Pump sizes with suction/discharge from 2"/1½" to 6"/4" are covered; length across flange faces is from 15" to 30".

Three pump designs are included within a common envelope. A close coupled design, VM, using a NEMA JM or JP flange mounted motor, with motor shaft and mounting dimensions and tolerances to NEMA MG 1-18.614. Obviously the motor must be moved to inspect the seal or remove the rotating assembly.

The second design, VC, is a short pump shaft rigidly coupled and spaced to a NEMA P-base flange mounted motor. Motor flanges, dimensions and tolerances are to NEMA MG 1-18.620. Removal of the pump rotating assembly or seal does not need the motor to be moved.

The third design option, VB, is for pumps with bearing housings driven through flexible spacer couplings, see Figure 1.5. These motors shall be NEMA C-face to NEMA MG 1-11.35 with solid shafts. Again removal of the pump rotating assembly or seal does not need the motor to be moved. Designs VC and VM have specified bearing L10 lives of 26000 hours at rated duty or 17500 hours at maximum load. Pumps to VB shall have bearings suitable for 17500 hours at maximum load. On test, running at 100/105% speed and ± 5% rated flow, the unfiltered vibration on the top pump or motor bearing housing shall not exceed 0.25 in/sec or 0.0025 in peak-to-peak displacement.

The Standard specifies pressure ratings of 125 LB for cast iron pumps and 150 LB for steel and stainless steel; 12 and 20 barg. An option is given for 250 LB and 300 LB flanges. Pressure/temperature ratings are in accordance with ANSI B16.1 and B16.5. Material requirements are similar to Section 1.3.5 types with a 0.125" corrosion allowance. Allowable nozzle loads must be specified by the manufacturer for the material offered at the specified operating temperature.

The Standard specifies a seal cavity which must be capable of accepting double seals with a pumping ring for forced circulation of buffer liquid. A packed stuffing box is optional.

At 60Hz pumps are capable of 320 m^3/h at heads of 120 m; 50Hz performance is reduced to 265 m^3/h at heads of 83 m. The Standard specifies the maximum pump absorbed power to be 172.5 hp, 128 kW.

Some manufacturers build a heavier version of the vertical inline pump to the VC design which complies with the requirements of API 610. Removal of the coupling allows seal inspection and replacement without disturbing the motor. In some designs the rotating assembly cannot be removed without detaching the motor stool. Capacities up to 1150 m^3/h at heads up to 230 m are possible at 60 Hz. Suction/discharge sizes go up to 14"/8" and pressure ratings of 100 barg are available on some sizes.

Vertical inline pumps are really end-suction pumps with an extension on the suction nozzle. High suction pressure creates axial thrust which will reduce bearing life. The manufacturer should be asked to confirm the bearing life if any doubt exists about the magnitude of the suction pressure.

1.3.12 Vertical multi-stage centrifugal pumps for general applications (including segmental pumps, dH < 300 m, deep well ejector applications, wash water)

The differential head produced by a centrifugal pump is dependant upon the impeller diameter and the speed. In very simple theory, it would be possible to increase the diameter or the speed to produce any desired head. In practice life is more complicated. If a pump for a small flow and high differential was designed with a single impeller running at a 2-pole motor speed, a large diameter and narrow tip width would result. At some stage in the range progression the impeller would become impossible to cast or machine. Also the pump would be large in diameter requiring too much material. Friction losses between the sides of the impeller and pump casing increase proportionally to the fifth power of the impeller diameter resulting in low efficiency. The pump speed cannot be increased indefinitely because impellers can disintegrate under the influence of centrifugal forces which increase with the square of the speed. The solution to the problem is to divide the total differential head across several impellers working in series. The impellers, usually identical, each do a proportion of the work. The segmental pump, or ring section pump, is a popular mass-produced design to fulfil these requirements.

Very small vertical segmental pumps are produced for low flow high head applications. These pumps are similar, in some ways, to the vertical inline pumps shown in Figure 1.13. A base, with inline suction and discharge connections and a mounting foot, is used to support the stack of segments and the electric motor. Each segment consist of a diffuser, an impeller and a spacer. The diffuser forms the outer pressure casing and collects the flow from the tip of one impeller and redirects it into the eye of the next impeller. The spacer is used to separate the impellers. On small pumps the seal between diffusers is metal-to-metal; good surface finish and accurate machining being essential. Larger pumps use O rings. The bearings and

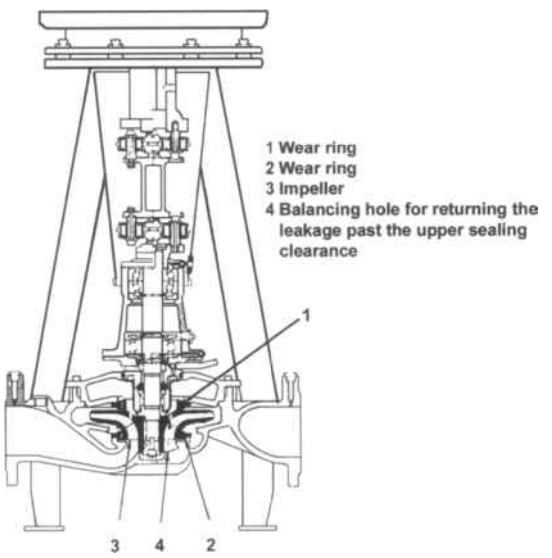

Figure 1.13 Vertical inline pump with support feet, bearing bracket and extended motor stool for spacer coupling.

This book belongs to Robert Durham (rdurham@thewaylabs.com)
Copyright Elsevier 2024

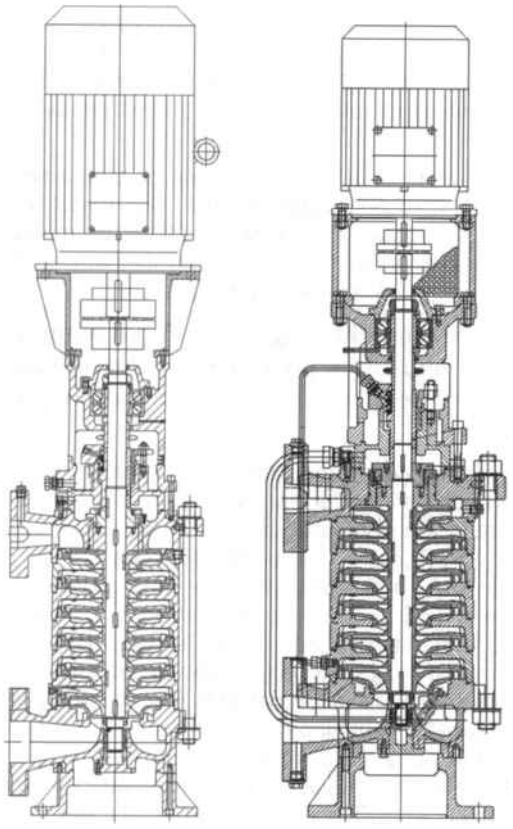

Figure 1.14 Two typical larger vertical segmental pumps
Courtesy of Sterling SIHI GmbH

seals are housed in the base and a motor mounting stool at the top. The complete pump assembly being held together by long tie-rods around the outside of the diffusers. Very small units of this style are limited to 5 to 10 kW. Pumps in cast iron and bronze with pressures up to 25 barg are standard.

Slightly larger versions of segmental pumps have the suction and discharge connections at opposite ends of the pump; horizontal and vertical variations are available in these sizes from one to twenty stages, see Figure 1.14. Power requirements would be up to 300 kW. Pumps are available in cast iron, steel, bronze and duplex stainless steel with pressure ratings up to 40 barg.

Various differential heads are achieved by varying the number of stages. In order to maintain good efficiency it is necessary, for a given head, to increase the number of stages as the volume flow decreases, Figure 1.15.

Multi-stage segmental pumps are used in commercial and domestic installations in multi-storey buildings for; water distribution, central heating, steam condensate, fixed fire fighting pumps.

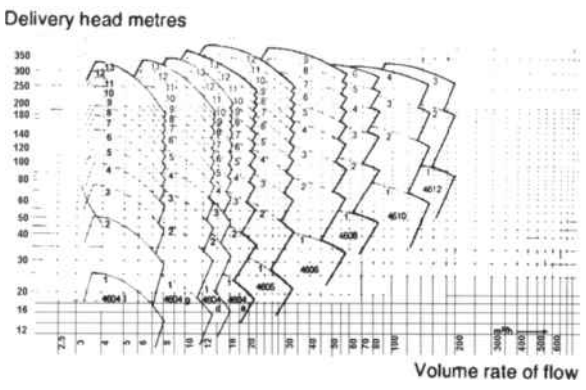

Figure 1.15 Range chart at 2900 rpm for segmental pumps

One disadvantage of the segmental pump design is the number of seals and potential leak paths in the pressure casing due to the assembly of individual diffusers. For this reason maximum operating temperature is limited to around 170 °C and applications on hazardous liquids extremely restricted.

Wash water pump packages

For washing purposes, car washing for example, there are off-the-shelf packages available. Typical operating data: flow 40 litres/min with discharge pressure ≈1.5 MPa or 15 barg, equivalent to a differential head of 150 m. The pump normally supplied is an electrically driven multi-stage centrifugal pump. To prevent zero flow operation while the liquid flow is shut-off, which would cause overheating of the pump, a minimum flow sensor is included in the package. This monitors the liquid flow through the system and prevents the pump from operating in the event of low water flow. A typical arrangement of a washing package is shown in Figure 1.16. The numbers in the illustration refer to:

1. Shut-off valve. For servicing of pump and equipment.
2. Inline suction filter. Prevents contaminants from entering the minimum flow sensor and the pump.
3. Minimum flow sensor. Starts and stops the pump automatically. Connects with single-phase cable to the motor safety switch. The pump must operate with a positive supply pressure where the sensor is fitted.
4. Non-return valve. Prevents water from flowing back into the supply pipe. Essential when connected to municipal drinking water system.
5. Vacuum valve. Activated in the event of the water supply pipe failing to supply the quantity of water required by the pump.
6. Motor safety switch. Switches off electric supply to the motor and triggers alarm signal in the event of a fault arising. Must always be used when a minimum flow sensor is fitted.
7. Pressure gauge. Fitted to pump's delivery flange.
8. Solenoid valve. Water-proof. Operated by coin slotmeter.
9. Cock. To isolate hose.
10. High pressure hose. If the delivery pipeline is long, a larger diameter should be fitted in order to reduce the pressure drop.
11. Wash-gun. Completely rubber covered with shut-off and regulating trigger. Can be adjusted for high velocity jet and fine spray.
12. Coin slot-meter. For self-service vending. Can be set to 10, 15, 20, 25, 30 and 35 minutes. Coin setting as required.

Self-contained wash packages are also available using reciprocating pumps, see Sections 1.5.14 and 1.5.15..

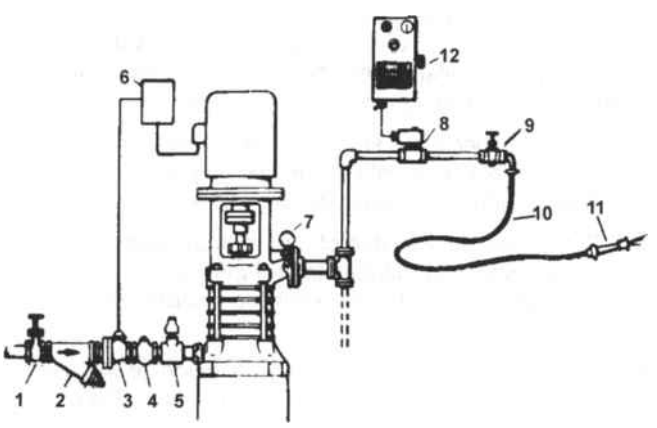

Figure 1.16 Wash water pump package

LIBERTY EXHIBIT 1014, Page 42

This book belongs to Robert Durham (rdurham@thewaylabs.com) Copyright Elsevier 2024

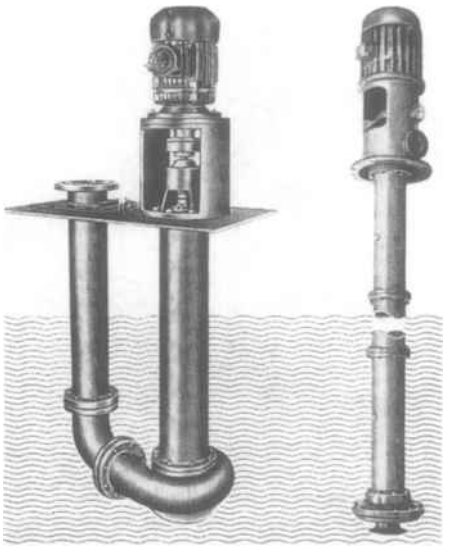

Figure 1.17 Single-stage vertical wet-pit pump

1.3.13 Vertical wet-pit pumps

This pump type comprises all those pumps designed to be suspended into the liquid with the drive motor on top. Figure 1.17 shows a typical single-stage design where the pump discharge is piped separately through the mounting plate. The pump seal is mounted in the pump casing below liquid level. The thrust bearing is included in the mounting plate assembly.

The style of construction shown in Figure 1.17 is limited to fairly low power pumps. The column surrounding the shaft is relatively small in diameter and the discharge pipe helps to increase rigidity of the assembly. As the shaft length increases intermediate bearings must be added to reduce shaft deflection and vibration. Special rubber bearings are available which can operate with water as the sole lubricant.

Larger pumps — centrifugal, mixed-flow and axial propeller, are constructed with a column which encloses the shaft and also acts as the discharge pipe. See Figure 1.18. The column diameter is increased to accommodate a reasonable liquid velocity. The column is extended through the mounting plate to allow a branch to be fitted for the discharge connection. A seal, rated for discharge pressure, must be fitted above the discharge connection. Again, intermediate bearings must be fitted as the column length extends. Pumps are available for flows in excess of 6000 m^3/h at heads up to 150m.

Vertical pumps, especially in the larger sizes, can be prone to vibration problems. The problems are caused by pump or motor shaft unbalance occurring at a frequency which coincides with a natural frequency of the column. Because of this it is essential that large pumps are tested in the manufacturer's works under conditions which duplicate, as closely as possible, the

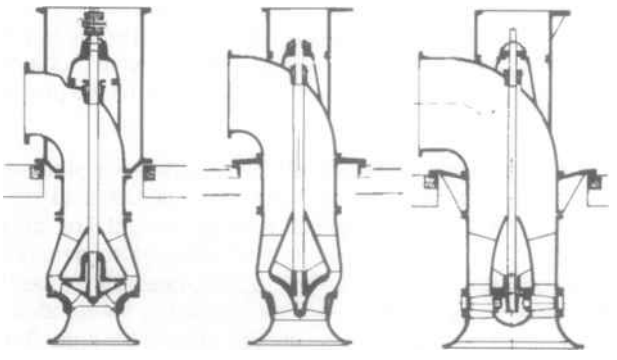

Figure 1.18 Single-stage vertical wet-pit pumps in centrifugal, mixed-flow and axial propeller designs

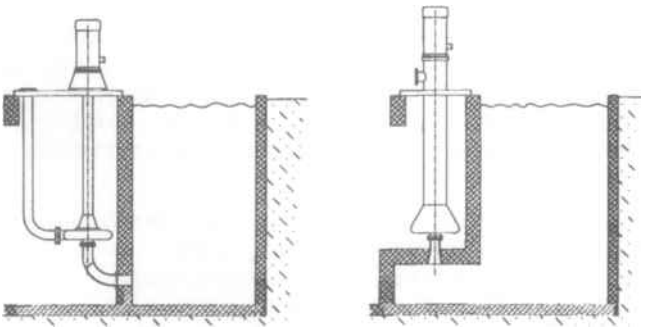

Figure 1.19 Vertical dry-pit pumps

site operating conditions. Extensive testing and modification is much easier in the works than on site.

A variation of the vertical wet-pit pump is the vertical canned pump. A vertical wet-pit pump is built inside a can or pressure vessel which is also suspended from the mounting plate. The can has a flanged pipe connection, pump suction, which may be attached above or below the mounting plate. This type of design is used for volatile liquids with low NPSHa. The liquid is taken from the suction line elevation down the can to the first stage impeller eye. The NPSHa is increased by the difference in levels between the suction line and the impeller eye. This variation is used extensively for liquified gas applications.

1.3.14 Vertical dry-pit pumps

Vertical dry-pit pumps are quite similar to wet-pit pumps but the pump casing in not immersed in the liquid. The liquid is carried from the pit to the pump suction by concrete ducts or metal pipework. Figure 1.19 shows two examples of dry-pit pump installations.

The left hand installation shows a pump with metal suction pipe and a separate discharge pipe. The right hand installation shows a concrete suction duct and the discharge within the column. Pump sizes are similar to wet-pit pumps.

1.3.15 Marine pumps

Marine pumps are included as important components in, not only ships and oil rigs, but also underwater equipment. Pumps for ships can be classified as follows:

- Systems for propulsion, e.g. pumping fuel, lubricating oil, cooling water, feed water and condensate
- Systems dependent on the cargo
- Safety systems. e.g. for bilge pumping, ballast pumping, for fire fighting
- Domestic housekeeping type systems for making and pumping drinking water, hot and cold fresh water, sewage etc

The types of pumps used for fuel is dependant upon the type of fuel. Many ships use heavy fuel which is about 3500 Redwood No 1. Rotodynamic pumps would be inappropriate. Double acting piston pumps act as transfer and low pressure feed pumps. Plunger pumps, usually built by the engine manufacturer, inject the fuel into the cylinder. Special lubricators, driven by eccentrics or geared to an engine shaft, inject lubricating oil into the cylinders. Screw or gear pumps provide pressurised lubricating oil. Fresh water for engine cooling, and seawater for cooling are provided by centrifugal pumps. Packages are available using double ended motors which supply fresh and seawater simultaneously from two pumps on a common baseplate. Vertical units have been built with fresh and seawater pumps driven by a normal motor. Steam turbine ships use multi-stage centrifugal pumps for boiler feed and condensate extraction duties.

Again, the type of cargo pump is dependant upon the cargo. Crude is a common load but is extremely variable, with low to

This book belongs to Robert Durham (rdurham@thewaylabs.com) Copyright Elsevier 2024

very high viscosity. Steam driven, direct acting, vertical piston pumps are available which can operate on petrol through to the most viscous crude oil. Electrically driven piston pumps are also available but are not so versatile as the steam versions. Liquified petroleum gas and anhydrous ammonia have become popular as a sea cargo. Special centrifugal pumps are available for loading and unloading.

Safety systems for marine applications are usually designed around seawater because it is readily available. Bilge pumps largely cater for seawater. Some modern pumps have monitoring systems fitted which shut down the bilge pumps if the oil content is higher than 15 parts per million (ppm). The amount of liquid able to be pumped from the bilges is dependant upon the age of the ship. Modern ships tend to have mechanical seals on the stern tube so that very little leakage enters via that route. Soft packed stern tubes require some leakage for lubrication. In some vessels the level in the bilges must be watched very closely as it has a great effect on stability. Depending on the age of the ship the bilges may be pumped every two hours, at the end of each watch or automatically by float controls. The pumps may be reciprocating or centrifugal or ejectors powered by seawater. Reciprocating and centrifugal pumps would have a priming system to evacuate the suction line. Ballast and fire fighting pumps operate on seawater and would be centrifugal pumps.

Turbine and engine driven vessels can make fresh water from seawater by evaporation or reverse osmosis. Evaporation is a low pressure process requiring single-stage centrifugal pumps. Reverse osmosis for seawater operates at 70 barg and requires a reciprocal pump or a multi-stage segmental pump. Other domestic water circuits would have single-stage centrifugal pumps similar to those used onshore.

Ships at sea should be able to function safely and entirely independently, therefore special safety and reliability requirements are necessary. These are determined by marine insurance companies (classification societies) and each country's respective maritime authority. In certain cases additional requirements are imposed by, for example, port and canal authorities. Various types of pumps are used for the pumping systems mentioned earlier in the same manner as those land based systems.

Rotodynamic pumps on board are often of the vertical type in order to reduce space. The mechanical design is adapted, generally reinforced, to take account of the ship's movement at sea and automatic, separate or built-in air ejection systems are present to avoid operational problems in the case of long suction lines or if the suction intake is momentarily above the surface of the liquid. As a general rule, bronze or gunmetal is used when pumping seawater and the same material as in the case of land based systems is chosen for other liquids.

Figure 1.20 shows a typical vertical pump for general use on board ship. This is a double suction pump with the pump casing divided axially (in a vertical plane) in order to facilitate servicing. Single suction impellers with axially or radially split casings are used for smaller flows. In the case of a radially split casing, the pump's rotor should be able to be disassembled in a simple manner, like for example, Figure 1.5. Chapter 16, Section 16.3 shows the installation of cargo oil pumps as a practical example.

For marine use, there are many interesting pump applications, such as the steering/propulsion jet operation of non-anchored oil rigs with automatic positioning. A pump system as shown in Figure 1.21 and comprising axial pumps designed to operate with any flow direction, is used to limit heeling when loading for example; or for the intentional generation of heel angle in the case of icebreakers.

Small pleasure craft, cruisers and yachts, use flexible vane pumps for many applications. Hand-operated diaphragm

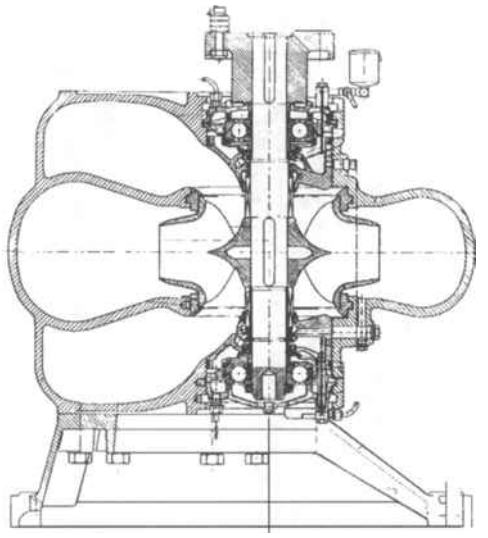

Figure 1.20 Vertical ship's pump with soluble suction impeller

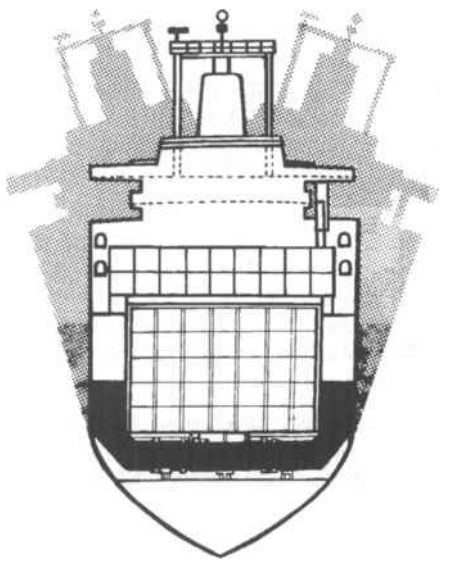

Figure 1.21 Heeling pump for ships

pumps have been used for bilge pumps. EN 28849, ISO 8849, specify the requirements for DC electric bilge pumps.

Self-priming pumps

The majority of pumps must be vented and primed prior to start-up. With pumps that have flooded suctions, this usually involves opening small valves on top of the discharge pipework, so that all the air trapped in the suction pipework and in the pump will be forced out and replaced by liquid. Some designs require vent valves on the casing to fill the pump completely. When the pump suction is not flooded the vent valve in the discharge pipework is coupled to an air ejector. The air is withdrawn by a partial vacuum and the liquid fills the void. Submersible pumps do not suffer these inconveniences as the pump is always full of liquid.

Self-priming pumps are designed to overcome these problems. The casing of a self-priming pump is constructed to retain enough liquid so that the impeller is always flooded. The casing needs priming only once provided the liquid does not evaporate or leak away through poor seals. The pump casing is shaped so that any gas or air bubbles become completely surrounded by liquid and are pumped from the suction to the discharge. Since there is only a limited amount of liquid during evacuation the gas and liquid must be separated, whereupon the liquid is returned to the suction side to recirculate. The internal design and

LIBERTY EXHIBIT 1014, Page 44

This book belongs to Robert Durham (rdurham@thewaylabs.com) Copyright Elsevier 2024

shape of the pump casing to achieve this effect varies considerably depending on the manufacturer. When selecting a pump it is important to take into account the wearing effect which for example sand, may have upon the pump's evacuating abilities.

When electric power is not available, on building sites for example, other sources of power must be used, such as engines, compressed air from mobile compressors or hydraulically from a separate power pack or one which is built into a vehicle. This type of pump is also suitable for intermittent use in construction work such as road making, rock blasting and excavating or as a fire precaution when carrying out stubble burning or site clearing.

Priming of engine-driven units can be assisted by using the engine inlet manifold vacuum or a separate engine-driven exhauster.

1.3.16 Submersible pumps with electric motor

Submersible pumps placed in ponds, ditches and sumps are used to drain, mostly water from locations which are deeper than the sewage system. Three types are available:

- Simple, small, self contained for clean water
- Heavy duty for contaminated water
- Special purpose for sludge

Small submersible pumps tend to be made of plastic where ever possible. This style of construction removes many of the insulation problems associated with electrical equipment. The pumps are close-coupled and completely self-contained. The motor is totally enclosed and cooled by the water surrounding the pump. Level switches, either internally or mounted externally on the casing, detect the water level and switch the pump on and off. Low voltage versions, 110V and 240V, single phase as well as 380V three phase are available. EN 60335-1 and EN60335-2 should be consulted for relevant electrical safety requirements. The smallest units will pump 10m^3/h against a head of 7m. Pipe connections are usually screwed and a non-return valve is required on the smallest units.

Heavy duty electrically driven submersible pumps are close coupled pumps and comprise, together with external level controls, a complete unit. Their weight is the lowest possible due to the use of light metal alloys although their resistance to corrosion is low. The parts which are exposed to wear from the liquid are, on the other hand, of high quality. Typical features are a hard metal impeller, rubberised wear parts around the impeller

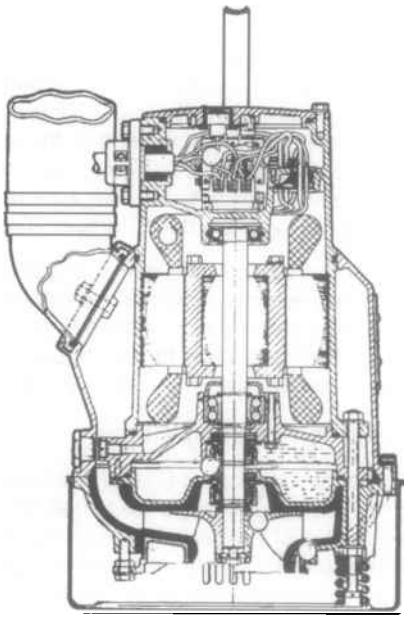

Figure 1.22 Cross-sectional arrangement of a heavy duty submersible pump

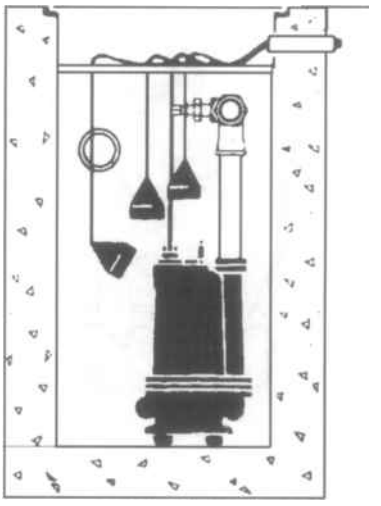

Figure 1.23 Installation of submersible pump in sump

and hard-faced seals. A non-return valve is built into the discharge connection.

The electric motor is completely encapsulated and cooled by the pumped liquid through a double jacket. In order to protect the motor in the case of blockage or operation without liquid, the motor is provided with a specially built-in motor protection unit. Normally the motor windings have thermistors which stop the motor when the temperature is too high by means of an inbuilt contactor. The shaft seal is nearly always of a double type with an intermediate oil chamber, see Figure 1.22. Normally construction pumps have suction strainers which limit the particle size to 5-10 mm, but there are special models with a through flow of up to approximately 100 mm for pumping larger solids. Figure 1.23 shows a heavy duty pump located in a sump with external level switches. Heavy duty pumps can handle up to 7000 m^3/h at heads up to 100 m.

Heavy duty submersible pumps are used for draining all types of building sites from the smallest ditch or hole to the large projects such as tunnelling in mountains or harbour building. This type of pump is practical in the event of flooding and for all other temporary pumping requirements. Of particular convenience is the fact that pump companies in this field offer both small and large pumps for hire for periods ranging from one day to several months.

A special adaptation of the heavy duty submersible pump has been developed for sludge and heavy muds. The impeller and casing are made from hard wear resistant iron alloys, not rubber coated, with an agitator mounted on the shaft end where an inducer would be fitted. The pump is intended for use on liquid solid mixtures with very high solids content where the pump can sit, initially, on the surface. The agitator beats the mixture and induces moisture to travel towards the impeller. The extra moisture locally helps the mixture to flow and the agitator action allows the pump to settle in the mixture. The novel design of the agitator allows these pumps to handle liquid solid mixtures which would otherwise be moved by shovels.

1.3.17 Non-electric submersible pumps

Electric submersible pumps are potentially very dangerous. Many small submersible pumps are used with water. Water and electricity is of course a dangerous combination. The motor manufacturer takes extreme precautions to prevent the water and electricity mixing. Large submersible pumps are used for handling hazardous liquids, such as crude oil. It is flammable but is not a pure liquid. Crude oil is a mixture of liquids, and possibly gases such as carbon dioxide and hydrogen sulphide. Hydrogen sulphide is potentially poisonous as well as flammable. Removing electricity from the pump installation therefore removes a very serious hazard!

This book belongs to Robert Durham (rdurham@thewaylabs.com)
Copyright Elsevier 2024

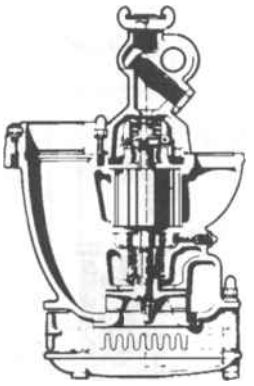

Figure 1.24 Compressed-air driven submersible pump

Sometimes electric power is not available, on building sites for example; and so other sources of power must be used, such as engines, compressed air from mobile compressors or hydraulically from a separate power pack, or one which is built into a vehicle. This type of pump is also suitable for intermittent use in construction work such as road making, rock blasting and excavating or as a fire precaution when carrying out stubble burning or site clearing.

Compressed air-driven rotodynamic submersible pumps are of similar construction to those which are electrically driven. They are equipped both with or without special heavy-duty components for pumping large solids. The high speed compressed air motor, lubricated by oil mist, can compete on performance with electrically driven units, see Figure 1.24. Also remember, the air-operated double-diaphragm pump can be treated as a submersible pump. The air exhaust should be piped to above the maximum liquid level to prevent 'flooding' and potential corrosion of the air valve.

Jet pumps can be submerged, these pumps can handle large solids providing large quantities of liquid are moved, **and** large quantities of driving fluid are provided.

1.3.18 Submersible pumps for deep well applications

Submersible deep well pumps in smaller sizes have the same range of applications as deep well pumps with ejectors. The difference here being that the pump is placed directly in the borehole connected by means of a delivery hose and electric cable.

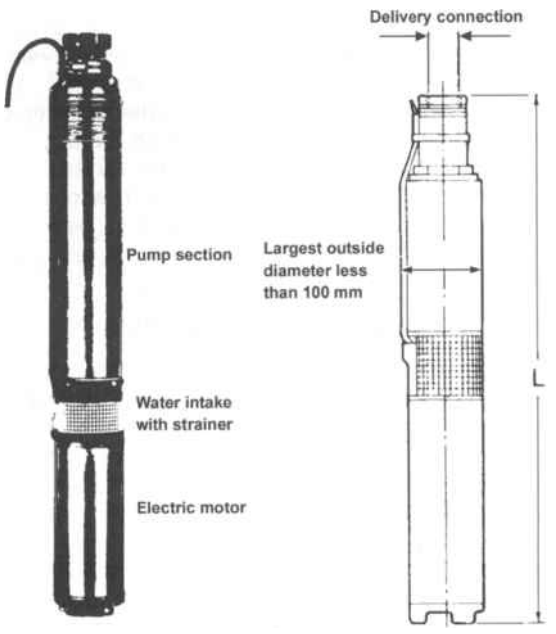

Figure 1.25 Small submersible deep well pump

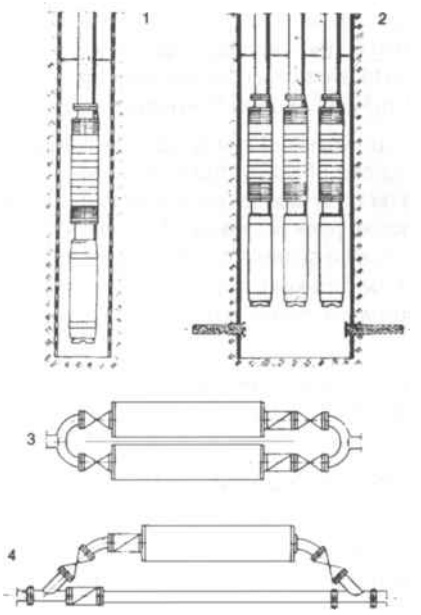

Figure 1.26 Deep well pumps placed in wells - illustrations 1 and 2, and placed in pipe section for pressure boosting - illustrations 3 and 4

Since the smallest borehole diameter is 4", the diameter of the pump must be somewhat less, see Figure 1.25. Impellers are between centrifugal and mixed-flow designs with as many as 100 stages. The pump is a multi-stage centrifugal pump driven by a special type of long thin electric motor located beneath the pump and cooled by the water in the borehole. For small pumps, suitable for domestic applications, the pump length L varies according to the depth of the borehole between 500 and 2500 mm.

Submersible deep well pumps of larger sizes have outside diameters of up to approximately 500 mm and lengths of up to 5 metres. Their hydraulic data varies considerably, the maximum values being: flow 5000 m^3/h and differential head 1000 m. Motor outputs of several megawatts are available when using high voltage motors.

These pumps are used for municipal drinking water supply, reduction of ground water levels and mine drainage. Deep well pumps find favour in oil field applications, on and offshore. Units are used for secondary oil recovery prior to water injection. Typical applications are to be found in restricted wells or shafts, Figure 1.26. They can also be used for pressure boosting in drinking water supply networks, where the pump may be integrated in a section of pipe.

The electric motors are always squirrel-cage liquid-filled induction motors, which naturally makes very great demands upon the motor's electrical insulation. The liquid filling is either clean water, water-oil emulsion or oil depending on the requirements of each specific case. The liquid filling is separated from the pumped liquid by a mechanical seal and a diaphragm to compensate for variations in volume, due to temperature changes.

The pump and motor rotors run in liquid-lubricated plain bearings. The axial thrust bearing is the most heavily loaded, which is why some manufacturers employ opposed impeller construction to reduce unbalanced axial forces. Special models are available for sand contaminated or corrosive water.

1.3.19 Portable self-priming pumps

Most pumps must be vented and primed prior to start-up. For pumps which have flooded suctions this usually involves opening small valves on top of the discharge pipework, so that all the air trapped in the suction pipework and in the pump will be forced out and replaced by liquid. Some pump designs require vent valves on the casing to fill the pump completely. When the pump suction is not flooded the vent valve in the discharge

LIBERTY EXHIBIT 1014, Page 46

This book belongs to Robert Durham (rdurham@thewaylabs.com) Copyright Elsevier 2024

Figure 1.27 Engine driven self-priming pump
Courtesy of Hale Products Europe

pipework is coupled to an air ejector. The air is withdrawn by a partial vacuum and the liquid fills the void.

Self-priming pumps are also designed to overcome these problems. The casing of a self-priming pump is constructed to retain sufficient liquid so that the impeller is always flooded. The casing needs priming only once provided the liquid does not evaporate or leak away through poor seals. The pump casing is shaped so that any gas or air bubbles become completely surrounded by liquid and are pumped from the suction to the discharge. Since there is only a limited amount of liquid in the pump casing during evacuation, the gas and liquid must be separated, whereupon the liquid is returned to the suction side to recirculate. The internal design and shape of the pump casing to achieve this effect varies considerably depending on the manufacturer. When choosing a pump it is important to take into account the wearing effect which sand, for example, may have upon the pump's evacuating capabilities. When considering the suction system design, the volume of gas in the suction piping should be minimised.

Engine-driven self-priming pumps are usually single-stage centrifugal pumps as shown in Figure 1.27. In order to be self-priming the pump must be filled with liquid prior to starting. The evacuation times quoted usually refer to the time taken to obtain the full pressure at the pump discharge for a specific suction lift, using a hose having the same diameter as the pump's suction connection and whose length exceeds the suction lift by 2 metres. The pump performance can be adapted to actual requirements by varying the engine speed. Figure 1.28 shows a typical small portable self-priming pump.

Engine-driven pumps can handle solid particles of up to 10 to 15 mm. The suction hose is reinforced because of the vacuum caused by pumping. The normal suction strainer can usually be replaced with a much shallower design in order to facilitate pumping down to within a few millimetres off a floor. The pump should be equipped with a protective safety frame and runners, skids or a wheeled trailer to enable it to stand on soft ground. Priming of engine driven units can be assisted by using the engine inlet manifold vacuum or a separate air pump.

Engine-driven single cylinder reciprocating pumps are also used as self-priming pumps especially for construction sites and road work. Engine-driven pumps are available with suction sizes up to 150 mm which can handle flows of 400 m^3/h at heads up to 30m. Engines sizes up to 30 kW are not unusual. Single cylinder mechanical diaphragm pumps are also available, see Figure 1.100. If compressed air is available, then the air-operated double-diaphragm pump can be considered. These pumps will not handle such large solids but are useful for 'clean' applications. Care should be taken to supervise these

Figure 1.28 A typical small portable self-priming pump
Courtesy of Varisco Srl

pumps. If the liquid supply 'dries-up' the pump will race and consume a large quantity of air while doing zero work.

Engine-driven units can be very noisy. Current designs pay special attention to noise reduction, levels of below 80 dBA at 1m are desirable. To achieve this level of noise it is usually necessary to fit silencers to both the inlet and exhaust sides. The engines are normally splash-lubricated which means that the pump must be placed on a relatively flat surface the inclination may seldom exceed 20°. Engine-driven compressors can also be extremely noisy.

1.3.20 Horizontal two-stage axially-split centrifugal pumps (includes ISO 13709, API 610 designs)

These pumps are similar in many respects to the double-suction and multi-stage pumps described later. The use of two-stages provides extra differential head. The advantage of the split casing is usually found in maintenance. Suction and discharge connections can be located in the bottom half, the top half being easily removed without disturbing piping. Process connections can be located in the top half with the obvious extra maintenance work. A radially-split design would remove this complication; see later. A radially-split design is recommended by ISO 13709 and API 610 for 'hazardous liquid' applications.

Impellers are usually mounted back-to-back. Two-stage pumps of this design are usually larger than the end-suction two-stage pumps and require the impellers to be placed between bearings. Impellers usually have a front wear ring. A common back wear ring, a centre bush, reduces leakage between the stages. The centre bush also acts as a bearing and provides some shaft stiffness. Engineering plastics can really improve the bearing effectiveness. A double-suction first stage can be used when NPSHa is low but this increases the cost significantly. The increased cost should be less than that of providing a separate booster pump and driver plus associated electrics and controls. A reorganisation of the plant layout may improve NPSHa and obviate a double-suction. Casings may be diffuser or volute. Diffuser pumps can be more efficient if the duty point is calculated accurately.

Depending upon the size of the pump, bearings may be rolling contact or sliding. Back-to-back angular contact ball bearings have become popular as a combined radial and thrust bearing. A very compact bearing housing is possible. Oil-ring lubrication is simple and effective. Larger pumps, with sliding bearings, usually have a tilting pad thrust bearing and a lube oil system. Some users prefer oil mist for rolling contact bearings and build a central supply system.

This book belongs to Robert Durham (rdurham@thewaylabs.com)
Copyright Elsevier 2024

Shaft sealing is accomplished by a wide range of mechanical seals, although soft packing may be possible. Cast iron casings probably have restricted sealing space as cast iron is not recommended for handling many hazardous liquids. Connecting small bore vent and drain piping is only possible via threaded holes in many casings.

These two-stage pumps are manufactured in a wide range of materials, see Table 1.1. Pumps in super stainless steels may be available to order.

Casing	Impeller
Cast iron	Cast iron
Cast iron	Bronze
Carbon steel	Cast iron
Carbon steel	Carbon steel
Carbon steel	11-13% Cr
Carbon steel	Stainless steel
Stainless steel	Stainless steel

Table 1.1 Two-stage axially-split pumps — materials of manufacture

Two-stage pumps can usually handle flows up to about 2000 m^3/h and differential heads of up to 600 m.

1.3.21 Horizontal two-stage radially-split centrifugal pumps (includes ISO 13709, API 610 designs)

These pumps are similar in many respects to the double-suction pumps described in Section 1.3.8 and multi-stage pumps described later in Section 1.3.25. A radially-split design is recommended by ISO 13709 and API 610 for 'hazardous liquid' applications. The use of two-stages provides extra differential head. The advantage of the radially-split casing is found in application and maintenance. These pumps can be centreline-mounted to remove thermal growth problems experienced in high temperature applications.

The use of circular gaskets, for the main pressure containment closure(s), removes problems associated with large flat gaskets and bolting. Elastomer 'O'-rings can be used when temperatures permit. Hybrid fibre and metal gaskets can be used for higher temperatures. Metal 'O'-rings can be used for the most arduous applications. Suction and discharge connections can be placed at any orientation, virtually, to suit the plant layout. Some connection layouts are more popular than others; top-top is the manufacturers default arrangement; this is the shortest delivery time because there are no pattern modifications. If the plant layout is considered, practically, for piping venting and priming, then good arrangements can be accommodated in the appropriate time scale. Maintenance of the pump does not require the casing connections to be broken.

Two-stage pumps of this design are usually larger than the end-suction two-stage pumps and require the impellers to be placed between bearings. Impellers are usually mounted back-to-back to minimise axial thrust and have front and back wear rings. A double-suction first stage can be used when NPSHa is low but this increases the cost significantly. The increased cost should be less than that of providing a separate booster pump and driver plus associated electrics and controls. A reorganisation of the plant layout may improve NPSHa and obviate a double-suction. Suction pipe venting should be checked. Casings may be diffuser or volute; larger pumps may have double volutes. Diffuser pumps can be more efficient if the duty point is calculated accurately.

Depending upon the size of the pump, bearings may be rolling contact or sliding. Back-to-back angular contact ball bearings have become popular as a combined radial and thrust bearing. A very compact bearing housing is possible. Oil-ring lubrication is simple and effective. Larger pumps, with sliding bearings, usually have a tilting pad thrust bearing and a lube oil system. Some users prefer oil mist for rolling contact bearings and build a central supply system.

Shaft sealing is accomplished by a wide range of mechanical seals, usually to EN ISO 21049/API 682. These two-stage pumps are manufactured in a wide range of materials. Lowest cost is carbon steel with cast iron stationary internal parts and cast iron wear rings. Materials progress through all carbon steel, 11-13Cr, austenitic stainless steel and super stainless steels. Some manufacturers produce pumps in 19Cr 13Ni 3Mo low carbon as standard. Pumps can be built with any range of compatible materials, to order, if sufficient time is allowed in the contract timetable.

Two-stage pumps can usually handle flows up to about 2000 m^3/h and differential heads of up to 800 m with pressure ratings of 100 bar(g). Operating temperatures up to 425°C are typical.

1.3.22 Multi-stage segmental centrifugal pumps dH > 300 m

These pumps are a larger version of those in Section 1.3.12; horizontal pumps only with flows up to 3000 m^3/h at heads up to 4500 m are available requiring drivers up to 10 MW. Special designs for boiler feed pumps allow operation over 200 °C at 500 barg. Larger pumps are available in a wider range of materials; cast iron, steel, bronze, 18-10-2 austenitic stainless steel and

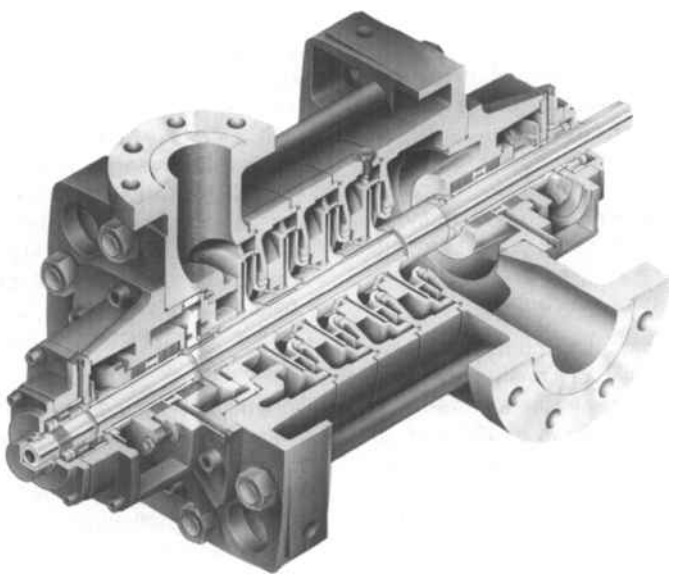

Figure 1.29 Large 4-stage segmental pump with balance drum, sleeve bearings and tilting pad thrust bearing

LIBERTY EXHIBIT 1014, Page 48

This book belongs to Robert Durham (rdurham@thewaylabs.com) Copyright Elsevier 2024

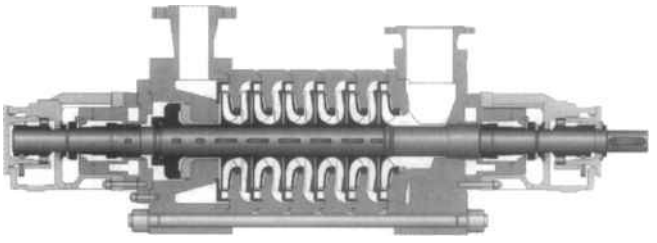

Figure 1.30 A high pressure segmental pump with balance disc and roller bearings
Courtesy of KSB AG

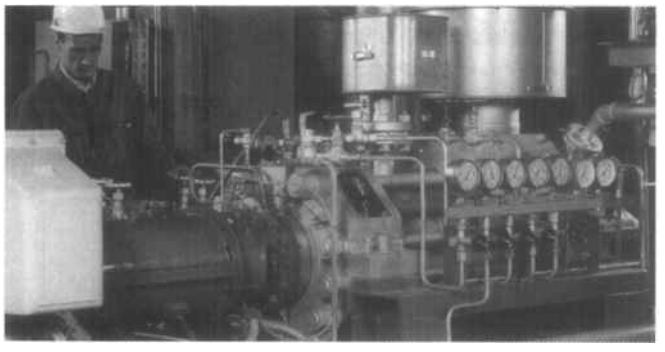

Figure 1.31 A typical installation of a hot high pressure segmental pump
Courtesy of KSB AG

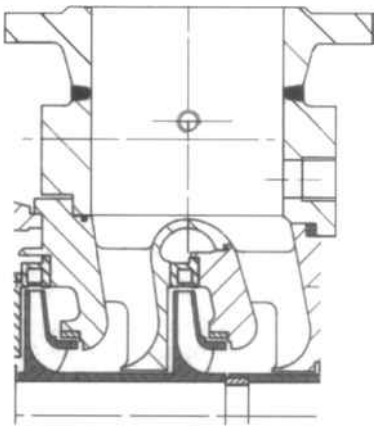

Figure 1.32 A double-suction arrangement for a high pressure segmental pump
Courtesy of KSB AG

duplex stainless steel. Some manufacturers have opted for fabricated suction and discharge heads, using thick boiler plate machined to the required profiles. Interstage connections are possible. Hydraulic axial thrust reduction can be implemented by disc, drum or double-drum (a balance drum with two diameters). Pumps can be fitted with rolling contact or sliding bearings. Tilting pad thrust bearings are available. The previous comments regarding hazards liquids still apply. Higher head segmental pumps are popular as boiler feed pumps and seawater pumps for desalination and reverse osmosis. Also useful in mining, irrigation and gas scrubbing processes. Figure 1.29 shows a large 4-stage segmental pump. Examples of high pressure pumps are shown in Figures 1.30, 1.31 and 1.32.

1.3.23 Horizontal multi-stage axially-split centrifugal pumps (includes ISO 13709, API 610 designs)

Large multi-stage axially-split pumps have a very wide range of applications, notably mine drainage, boiler feed and process industries. A sectional view of this pump type, during routine overhaul and general view, are shown in Figures 1.33 to 1.35 respectively. They are also used extensively in the refining, petrochemical industries and in oil field production. The design and construction being determined by the specific functions and components.

- Diffuser type
- First stage impeller
- Thrust balancing
- Bearing types

The theory of rotodynamic pumps shows that the kinetic energy of the liquid produced in the impeller must be converted to pressure energy by efficiently reducing the velocity of the liquid. Two methods are used; vaned diffusers and vaneless diffusers called volutes. The two main groupings of axially-split pumps are diffuser pumps, meaning vaned diffusers, and volute pumps. Modern trends are leaning towards volute pumps as these are cheaper, in theory, to produce.

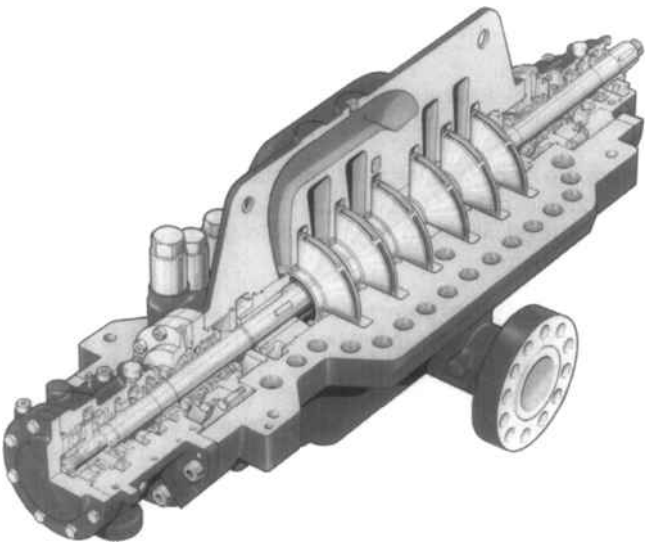

Figure 1.33 Sectional view of a multi-stage axially-split case pump, API 610 code BB3
Courtesy of Weir Pumps Ltd

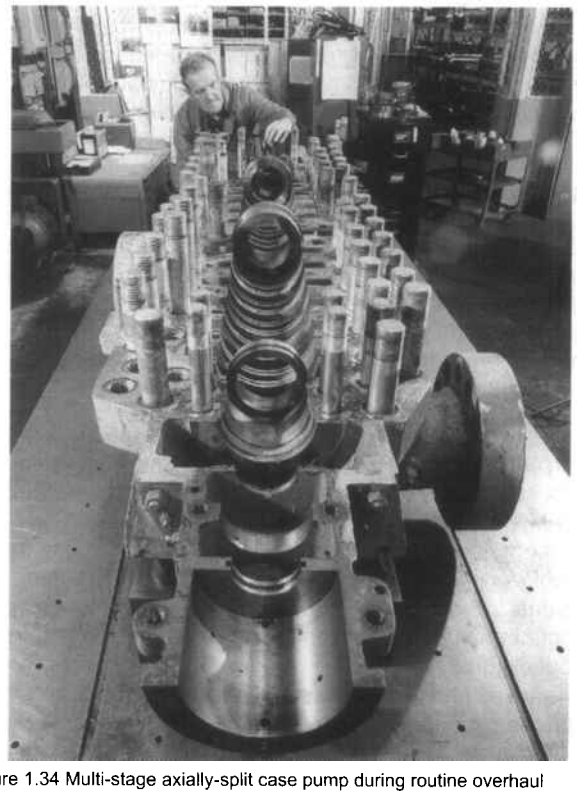

Figure 1.34 Multi-stage axially-split case pump during routine overhaul
Courtesy of Weir Pumps Ltd

This book belongs to Robert Durham (rdurham@thewaylabs.com) Copyright Elsevier 2024

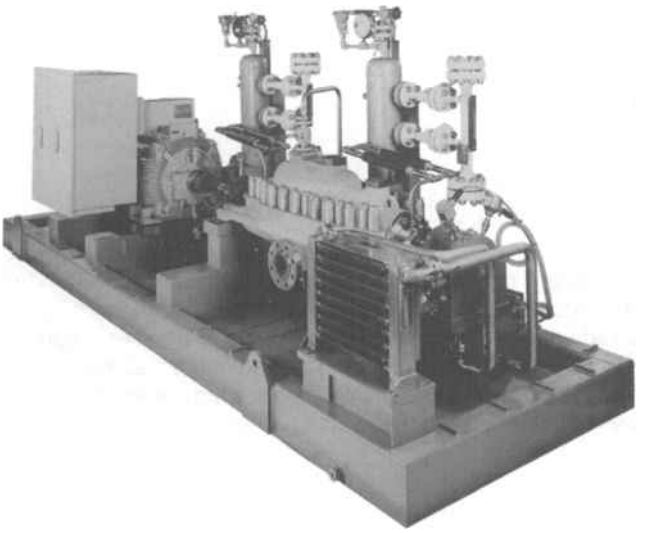

Figure 1.35 Multi-stage axially-split case pump, API 610 code BB3
Courtesy of Weir Pumps Ltd

There are also two choices of first stage impeller; single entry and double entry. Double entry impellers are used in low NPSHa applications to try to obviate the need for separate booster pumps.

For moderate pressure increases it is possible to absorb the axial thrust directly in the thrust bearings. However, it is generally necessary to balance out the thrust. The most common method of balancing thrust is by opposing the direction of the impellers and balance discs or by means of balance drums. Opposing impellers leads to some complications with the casing castings due to the transfer passages and can lead to poor casting integrity and weld repairs. Experts argue endlessly about the merits of balance disc and drums; personal experience with the specific application may be the best guide.

Depending upon the pump size, ball bearings are probably the standard with angular contacts, back-to-back, for the thrust. Sliding bearings with tilting pad thrust bearings may be an option or become the standard as pump speed increases. At higher speeds the life of rolling contact bearings is reduced whereas sliding bearings can have an almost unlimited life. Lube system options will cover all requirements.

Small multi-stage pumps, like borehole pumps, can have many stages, 50 or 100. Larger multi-stage pumps are limited by shaft deflection and critical speeds and the number of stages rarely exceeds 15. It is often required to run them at higher speeds than those produced directly by electric motors, this means using steam or gas turbines or geared-up electric motors. The speed is generally 5000 to 8000 rpm. Some recent development trends are towards high speed single stage pumps but this is not universal.

Pumps are available in many material combinations with casings in carbon steel, 13% Cr steel, 18-10-2 stainless steel and duplex stainless steel. Pumps at 2900 rpm can handle 2400 m^3/h at heads over 1400 m. Running at higher speeds will produce more flow at higher heads. Standard casing designs are available for pressure ratings up to 280 barg. The maximum rating to date is thought to be 430 barg. Connections are usually in the bottom half so that all maintenance can be accomplished without disturbing the process pipework. Other connection positions are sometimes optional. Stuffing boxes and seal cavities tend to be big enough to cope with most requirements. Some manufacturers can incorporate intermediate connections on the pump so that liquid can be added or extracted at an intermediate stage.

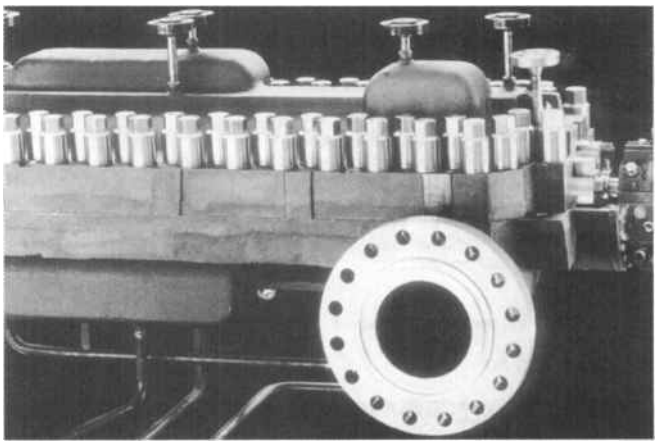

Figure 1.36 An example of capnuts on a horizontal joint
Courtesy of Weir Pumps Ltd

Pumps are available to API 610 requirements. API excludes the use of axially-split pumps when:

- Liquid temperature of 205°C or higher
- Flammable or toxic liquid with SG 0.7
- Flammable or toxic liquid over 69 barg

The main weakness in the axially-split design is the joint between the casing halves. Some designs employ gaskets and others metal-to-metal joints. As the pump pressure increases the joint bolting becomes more heavily loaded and tends to stretch reducing the interface pressure at the joint faces. The number and size of bolts or studs which can be fitted around the joint is finite. Capnuts can be used to eliminate the space required for spanners but the highly loaded stud/bolt cross section still sustains the tensile stress, see Figure 1.36. This weakness in design is cured by the pump design in the next Section.

1.3.24 Horizontal multi-stage radially-split centrifugal pumps (includes ISO 13709, API 610 designs)

As developments within the process industries have increased so the range of hazardous liquids has increased. The limitation of the axially-split multi-stage pumps was addressed to remove fears of potential leaks of hazardous liquids and the radially-split pump design evolved.

Consider the multi-stage segmental pump shown in Figure 1.29. It has already been stated that this pump design has many potential leak paths. However if the stack of segments is housed with a pressure vessel any leakage would be contained; this is the basic design principle of radially-split pumps is illustrated in Figure 1.37. Figure 1.38 shows a horizontally-split casing assembly encapsulated in a radially-split pressure containment. The process pipe connections can be flanged or prepared for direct pipe welding as shown.

The small clearance around the outside of the segments is usually at discharge pressure so that the segments do not have to be designed to cope with high tensile stresses caused by internal pressure. Unlike axially-split pumps, radially-split pumps all have vaned diffusers and usually balance compensation by disc or drum. Some very special pumps have opposed impellers. The segmental stack, together with seals and bearing assemblies, is built as a complete assembly, called the cartridge, which is inserted into the pressure vessel from the non-drive end. This allows all work on the pump to be carried out without disturbing the motor or the pressure vessel and process pipework.

Three types of construction of radially-split pumps are built as standard, the variation being in the pressure vessel which is normally called a barrel. Hence the popular name for this type of pump, the barrel pump; not to be confused with very small barrel emptying pumps described in Section 1.6.2. Small and

LIBERTY EXHIBIT 1014, Page 50

This book belongs to Robert Durham (rdurham@thewaylabs.com) Copyright Elsevier 2024

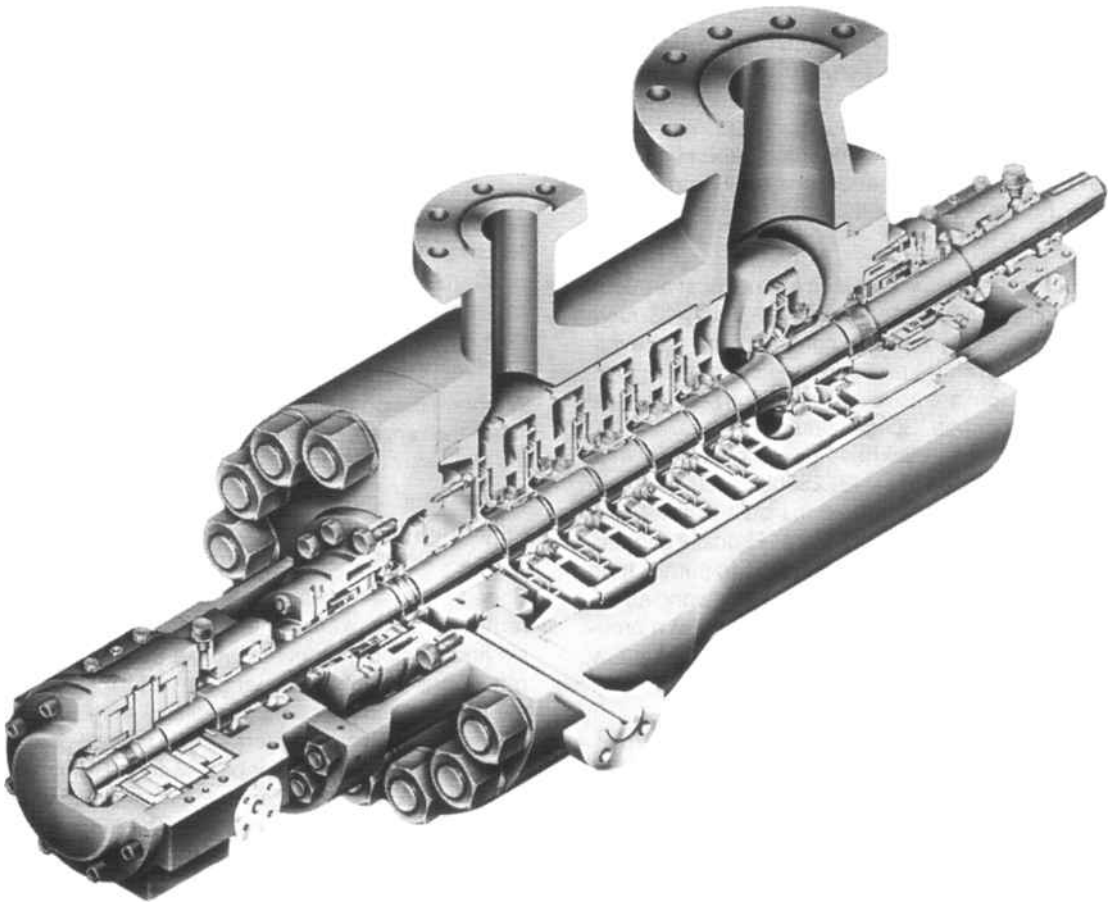

Figure 1.37 Cross-section of a multi-stage radially-split pump

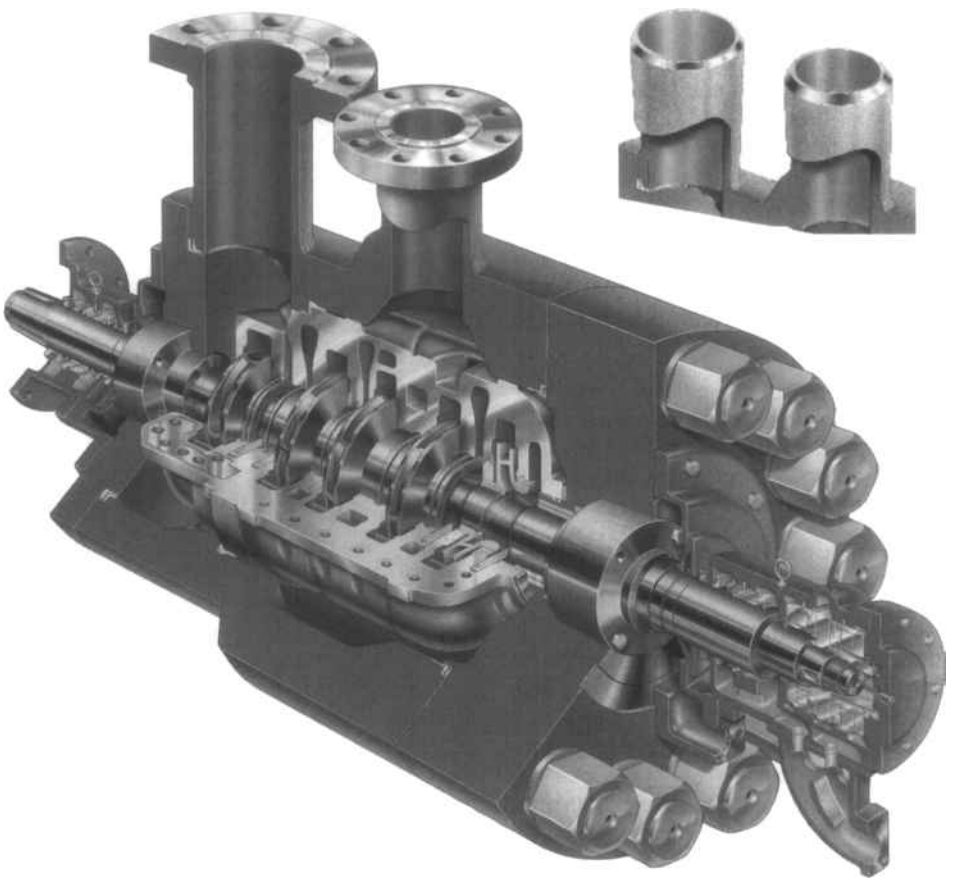

Figure 1.38 A horizontally-split casing assembly encapsulated in a radially-split pressure containment
Courtesy of Flowserve Corporation

This book belongs to Robert Durham (rdurham@thewaylabs.com) Copyright Elsevier 2024

low pressure pumps can have the barrel fabricated from standard pipe or rolled plate; this type of construction has been called segmental-pump-in-a-pipe. Larger pumps have cast or forged barrels. Forged barrels may have the process connections welded to the barrel requiring additional quality control. The barrel may be foot or centre-line mounted depending upon the application and inter-stage connections may be possible. Double suction first stage impellers are an option as is compliance with API 610.

Radially-split multi-stage pumps are used for the most arduous high pressure applications. Temperatures over 400 °C have been accommodated. Many material combinations are available to cope with temperature, pressure and corrosion. Flows over 400 m^3/h at 3000 rpm are possible; operating speeds up to 6500 rpm are not uncommon. Special pumps are available for direct drive by gas turbines. Total head rise of over 3000 m is not unusual. Pressure ratings up ANSI 2500LB, 430 barg, are available. One of the largest barrel pumps built was a boiler feed pump in a power station, rated at 55 MW. Process connections can be to any standard or special. Boiler feed pumps tend not to be flanged but butt welded directly to the pipework; as the casing is not disturbed during maintenance this is not a problem. Stuffing boxes and seal cavities can be made to suit any sealing requirements.

1.3.25 Large vertical multi-stage centrifugal pumps (includes ISO 13709, API 610 designs)

Vertical multi-stage pumps tend to be wet-pit pumps. Some versions are available where the pump is suspended within its own tank and effectively becomes a dry-pit pump. These vertical pumps are used for high flows in applications such as cooling water where one or two pumps feed a ring main which supplies a whole site. Construction details vary considerably including centrifugal and mixed-flow impeller types. Pumps are produced individually to order based on a range of standard designs. Countless material combinations are available at every conceivable level of quality.

Pumps can be built with flanged vertical motors mounted directly on top of the pump. Small pumps can be coupled with rigid couplings utilising thrust bearings built into the motor. Larger pumps have self-contained bearing assemblies, rolling or sliding, and are driven through flexible couplings. Some pumps are built with a right-angle gear box mounted on top; these pumps must have self-contained bearings. The pumps are driven via flexible couplings by motors or engines. This style of pump is popular in offshore installations. Flows over 70000 m^3/h are possible, differential heads vary from 50m to over 400m.

Vibration can be a problem on vertical pumps. It would be reasonable to purchase large pumps from manufacturers who have facilities to test pumps in the fully assembled condition. Balancing requirements on motors and rotating elements may need tightening to reduce problems.

1.3.26 Single-stage centrifugal pumps with integral gearing

The process industries have shown considerable interest in high speed pumps. Lower speed multi-stage pumps can be replaced with smaller, more compact packages. Pumps consist of a specially designed radial vane centrifugal impeller and casing which incorporates one or two step-up gears driven by a standard 2-pole motor. The maximum, practical, gear ratio for a pair of gears is 6:1 so that 60 Hz pumps could run up to 120000 rpm and 50 Hz to 105000 rpm. A very wide speed range is available at both frequencies. Only vertical pumps are available for process applications; horizontal single-stage pumps proved difficult to operate successfully. Horizontal models are only available for very small duties such as domestic or commercial water boosting. When seal flushing is fitted pumps can run dry for short periods.

Some operational problems have occurred with some installations. The high pump speed can cause mechanical seal, soft packing, and bearing problems. Due to the speed, rolling contact bearings may be replaced by sliding bearings with attendant lube systems. High speed pumps can be relatively intolerant of rapid process transients and particularly distressed by NPSHa inadequacies and solids. Liquid viscosity can be a problem. The variation between manufacturers in the pump's resilience to cope with operating problems has lead users to consolidate with a specific manufacturer for specific applications.

Although the possible speed range is great, most pumps operate in the range from 15000 to 30000 rpm. Differential heads of 1500 m are common and powers up to 500 kW are possible.

Radial vane impellers can have a smaller stable operating range than the standard backward swept vane impellers. A variable flow by-pass line may be necessary for some applications.

Speed-up gear boxes tend to give more problems than speed reducing gear boxes. Contemporary developments in electronics and electric motors may make this mechanical technology redundant. Variable frequency inverters are used routinely to vary the speed of standard squirrel cage induction motors. Cheaper electronic inverters can be used to power switched reluctance motors. The rotor of a switched reluctance motor can be made in one piece from steel; no windings or rotor bars required. This motor can run at very high speeds without problems of integrity caused by centrifugal forces on assembled components. A single-stage pump could operate at the highest speeds and be limited by impeller construction and materials.

1.3.27 Multi-stage centrifugal pumps with integral gearing

High speed multi-pump packages are an extension of the design philosophy of the high speed single-stage pumps. A speed-up gearbox is driven by an electric motor. The gearbox has two or three output shafts, each of which drives a single stage centrifugal pump. The pumps can be connected in series or parallel to produce higher flow or higher head. An option is available to have a slower speed first stage pump which is specially designed for low NPSHr. Inducers are available for some

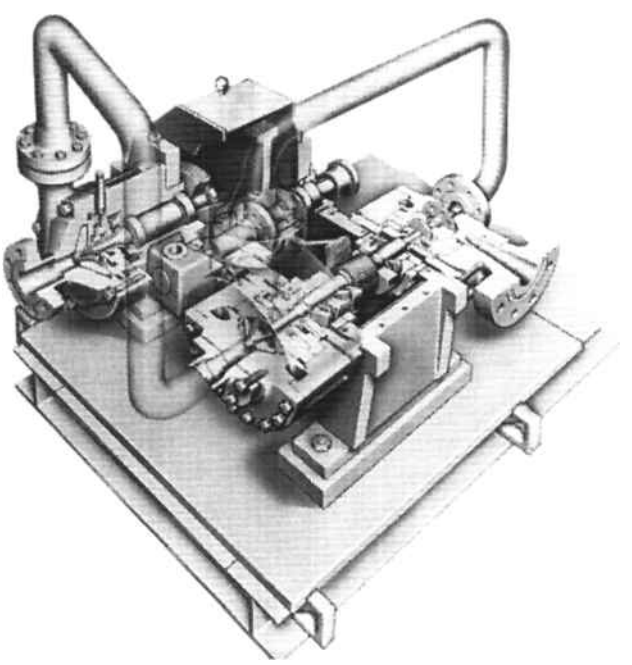

Figure 1.39 Horizontal multiple high speed pump

LIBERTY EXHIBIT 1014, Page 52

This book belongs to Robert Durham (rdurham@thewaylabs.com) Copyright Elsevier 2024

impellers. The multi-pump packages are restricted to horizontal pumps and an example is shown in Figure 1.39.

This type of packaging results in a compact powerful unit. Mechanical seals must be used as there is no access to the stuffing box for adjustment. Seal cavities are large enough for double and tandem seal configurations with flush and buffer liquids. The individual pump casings must be removed in order to inspect or maintain the seals; the process pipework and the inter-stage pipework must be removed to accomplish this. A special liquid injection feature allows the use of standard mechanical seals.

The individual pumps run at speeds from 12000 to 25000 rpm. Bearings may be a combination of rolling and sliding or all sliding. Lube systems can be tailored to customers requirements including API 614 compliance. Flows up to 225 m^3/h are possible at differentials up to 4500 m. High suction pressure capabilities are available up to 150 barg with casing pressure ratings up to 310 barg. Absorbed power can be to 1150 kW.

Most pump users tend to standardise on regularly used wear parts such as mechanical seals and coupling diaphragms. The choice of manufacturers for high speed seals may be very restricted. The comments at the end of Section 1.3.26 regarding by-passes and gearboxes also apply here.

High speed pump packages have replaced multi-stage centrifugal pumps and reciprocating pumps in some applications. High speed multi-pump packages are smaller but not as efficient. High speed multi-pump packages cannot reproduce the reciprocating pump characteristic but only cover the duty point.

1.3.28 Centrifugal pumps for pulp

For handling paper pulp, depending on the concentration of fibre in suspension, it is necessary to use specially designed pumps as follows:

- Up to 0.5% — Standard pumps
- 0.5 to approximately 2% — Pulp pumps or standard pumps fitted with special semi-open impellers
- Approximately 2 to 5% — Pulp pumps
- Approximately 5 to 6-7% — Pulp pumps with specially shaped inlet blading
- Above 6-7% — Positive displacement dense pulp pumps

For unscreened pulp of concentrations above 3% the pump flow passage should be at least 40 mm. The impellers for pulp pumps are semi-open with back vanes for simultaneous balancing of axial thrust and cleaning behind the impeller. Figure 1.40 shows such a pump, with a replaceable wear plate in the pump casing and axial adjustment of the rotor. The choice of material is normally stainless steel and for raw product sometimes grey cast iron. Due to the presence of entrained air in pulp suspensions it is necessary to design the blades of the impeller intake so as to prevent air locks. The concentration of air also causes rough running with increased levels of vibration and mechanical stress.

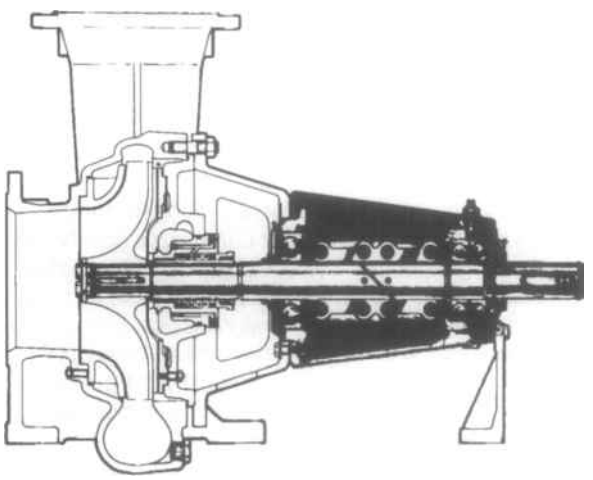

Figure 1.40 Pulp pump with semi-open impellers with back vanes

Compared with a water pump, the mechanical construction of a pulp pump requires an extra safety factor of approximately 2 in order to achieve satisfactory reliability. For pumping twigs and waste from the macerater, non-clogging free-flow pumps are best. Horizontal end-suction pumps with mixed-flow impellers are capable of 6000 m^3/h at 35 m up to 110 °C with pressure ratings of 7.5 barg.

1.3.29 Centrifugal pumps for handling solids < 10 mm

For very abrasive mixtures with particle sizes of up to approx 10 mm, the components in contact with the pumped fluid are rubberised or rubber coated. Typical solids handled would be some sands, iron and copper ore and mine tailings. Pumps which are rubber coated can have the coating repaired or replaced if the damage is not severe. Rubber lined pumps are built so that the lining of the casing can be removed and completely replaced.

Smaller pumps, 2" to 4" suctions, may limit solid sizes to 6 mm or less. Stuffing box requirements and drive arrangements are similar to those shown in Section 1.3.30. Small pumps are similar in hydraulic performance to all metal pumps. Larger pumps can handle more flow; a 16" suction will pass 5000 m^3/h at up to 48 m.

1.3.30 Centrifugal pumps for handling solids > 10 mm

Solids handling pumps are used for pumping suspensions and liquid/solid mixtures of various solid particle sizes up 70% solids by weight. Two types of construction for rotodynamic pumps are available; all metal and rubber coated or rubber lined. The particle sizes and the abrasiveness of the solids determine the choice of construction. Abrasiveness can be measured by the Miller Number according to ASTM G75-82, Test method for slurry abrasivity by Miller Number.

All metallic materials are used in the case of larger particles and higher liquid temperatures, see also Chapter 7, Section 7.5. Some manufacturers restrict the size of small particles which can be mixed with the large. With particles over 50 mm it is unlikely that 70% concentrations can be achieved. Pumps are available in various materials from plain cast iron to chrome irons with 2.5% to 27% Cr. Despite the use of extremely wear-resistant materials the operational life is relatively short - of the order of a few months and depending greatly upon the speed of flow, rpm, particle size and nature. Figures 1.41 to 1.44 show examples of typical heavy duty hard metal solids

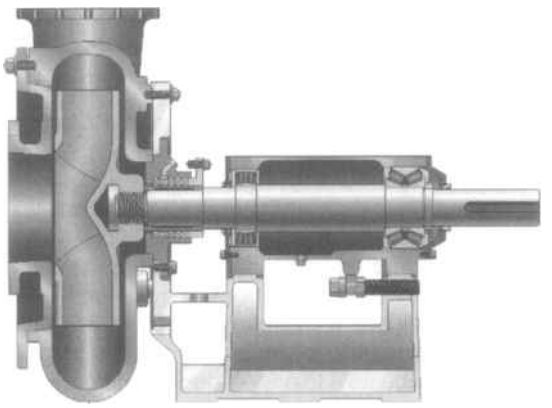

Figure 1.41 Cross-section through a heavy duty hard metal solids handling pump
Courtesy of GIW Industries Inc

This book belongs to Robert Durham (rdurham@thewaylabs.com) Copyright Elsevier 2024

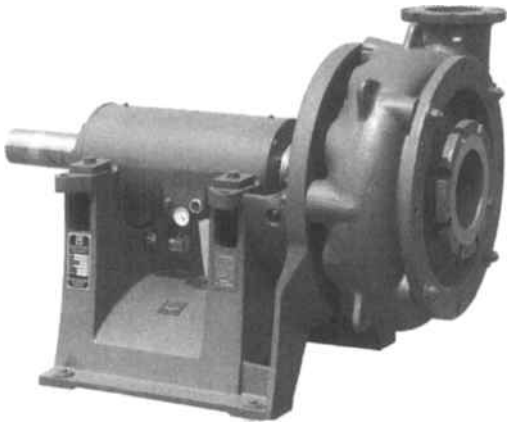

Figure 1.42 Typical heavy duty hard metal solids handling pump
Courtesy of GIW Industries Inc

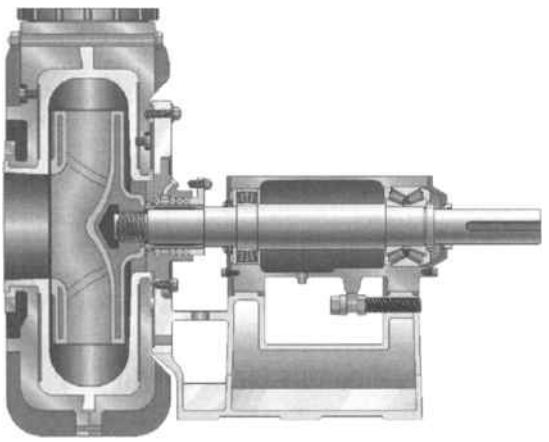

Figure 1.43 Solids handling pump with replaceable rubber lining

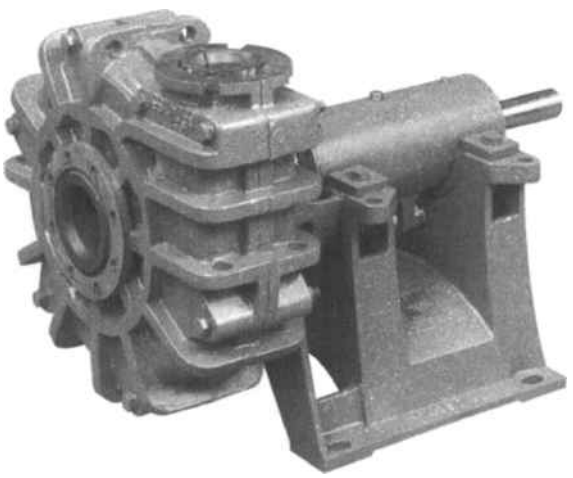

Figure 1.44 Typical solids handling pump with a replaceable elastomer lining
Courtesy of GIW Industries Inc

handling pumps and those with replaceable rubber and elastomer linings.

For delivery heads above 50 to 60 m it is normal to employ several pumps in series. Pump impellers are of the closed or semi-open type with suitably thick shrouds and vanes. The number of vanes are relatively few to reduce the chances of impact. Some models have adjustable casings to correct for wear. Shafts, bearings and bearing housings are dimensioned for heavy-duty loading due to the out-of-balance forces and high SG. Some manufacturers limit pump speed as SG increases. Solids pumps are usually V-belt driven, speeds from 2600 to 400 rpm, so as to be able to adjust the flow without machining the impeller. Throttling, to correct pump performance, is particularly difficult and prone to constant adjustment; variable speed is preferred.

Due to the abrasive nature of the liquid mixture particular attention has to be given to the design of the shaft seals. Design solutions such as stuffing box flush with clean liquid; hydrodynamic seals as in Chapter 8, Section 8.3; centrifugal seals with back vanes and as glandless pumps with overhung impellers for vertical models, as in Figure 1.41, are available. This pump type is particularly suitable for frothing fluids, where air can rise and not block the impeller intake. A certain degree of self-regulation is obtained by the air mixing at low level.

The maximum solid size handled continuously is a function of the pump size and impeller design; open or closed. Table 1.2 can be used as a guide for sizing pipework.

		Maximum particle size mm	
Suction nozzle	Discharge nozzle	Closed impeller	Open impeller
2"	1½"	11	24
3"	2½"	16	32
4"	3"	20	41
6"	5"	38	62
10"	8"	50	82
14"	10"	70	90
16"	12"	80	98
20"	16"	100	120

Table 1.2 Solid sizes for various pump sizes

A 2" suction pump can handle up to 30 m^3/h at heads of 60 m; a 20" suction pump can handle 2250 m^3/h at heads up to 38 m. Pumps are available which can handle solids larger than 120mm. Obviously to pump large solids in quantity, rather than an occasional piece as with a contractor's self-priming site pump, a great deal of liquid is required and a large pump. Pumps up to 36" or 900 mm suction are available. Efficiency tends to be low, because the kinetic energy given to the solids cannot be converted into increased pressure, although one pump was advertised at 90% on water between 500 and 900 rpm. It is essential to consult manufacturers very early in the system design and feasibility studies and be prepared to supply plenty of NPSHa, up to 10 m.

1.3.31 Non-clogging pumps

Non-clogging pumps are mainly used as sewage pumps for pumping untreated sewage in sewage treatment plants. This Section deals with normal models for dry installation and with only the pump section immersed in the liquid. Section 1.3.32 covers submersible models where both pump and drive motor can be operated below the surface of the liquid.

Sewage handling pumps are completely dominated by rotodynamic pump designs. The following types are used:

- Centrifugal pumps with through-flow impellers, special enclosed impellers with large almost straight passages
- Free-flow pumps, recessed open impeller
- Pumps having semi-axial impellers and axial pumps (propeller pumps) for larger flow rates and lower differential heads

The free area, the through-flow for non-clogging pumps, is normally 60 to 100mm for the smaller pump sizes and 125 to 150 mm for the larger pumps. The obviously desirable feature that particles as large as the connection diameter should be able to pass through the pump is not usually possible because of hydraulic problems and pump efficiency. Any solids should, in theory, be surrounded by liquid. See Table 1.2 for guidance. For small flow requirements, in order to obtain sufficient liquid flow, oversize pumps must be used.

All sewage handling pumps comprise single suction impellers. This is to avoid the necessity of locating the pump shaft in the

LIBERTY EXHIBIT 1014, Page 54

This book belongs to Robert Durham (rdurham@thewaylabs.com) Copyright Elsevier 2024

intake. Pump materials chosen are usually grey cast iron or SG iron for municipal sewage and grey cast iron or stainless steel for industrial effluent.

Pumps with channel impellers have always been the most well developed and constitute a special class of their own on account of the number of different types and the numbers of pumps in use. In practice most pumps have impellers with single or double channels, although larger pumps sometimes have three channels, Figure 1.45. As implied by the description 'through- flow' impeller, the pumped liquid passes through the pump impeller and out through the delivery connection after leaving the pump intake.

Pumps with through-flow impellers are characterised by their high degree of efficiency over a large part of the H-Q curve. The overall efficiency at the nominal duty point for medium size pumps is about 60%. The wear resistance of the impeller is moderately good when used in combined systems and good in separate systems.

The shape and design of free-flow recessed impeller pumps differs from through-flow pumps in that the location of the impeller and the utilisation of the pump casing is different, Figure 1.46.

The pump impeller is symmetrical with open vanes. The profile is low and its pulled back location, recessed in the stuffing box wall, leaves the pump casing completely or partially free. The free-flow pump can be described as a centrifugal pump having very large sealing clearance. The liquid and contaminants flow freely under the pump impeller and out through the delivery connection. The absence of sealing clearance results in a reduction in efficiency compared with through flow pumps. The overall efficiency at the nominal duty point for small and medium size pumps is 40 to 42%.

A special version of the semi-axial design pump has an impeller like a corkscrew. This style of pump has been called a screw-centrifugal pump. The flow passages are large and the leading and trailing edges are sharp to cut fibrous material. These are low head machines but water efficiency can be quite high, up to 84%.

Gentle handling !!!

Pumps, similar in design to sewage handling pumps, are used for transporting larger delicate solids, such as whole fish, fruit and root vegetables by means of water. The channel areas and shapes are designed to cause the least amount of damage to the product being pumped. See Chapter 16, Section 16.10 for an example of the pumping of live fish and food.

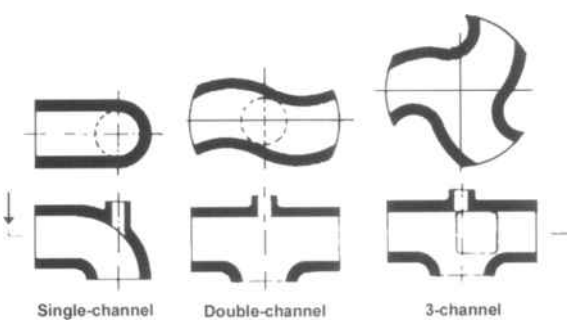

Figure 1.45 Various types of channel impeller

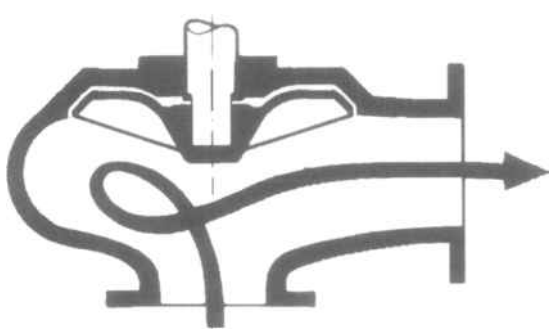

Figure 1.46 Free-flow recessed impeller pump

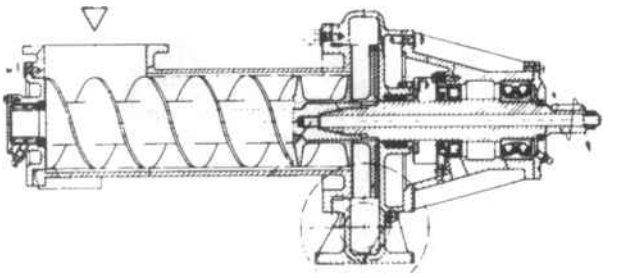

Figure 1.47 Waste pump with "compression screw" for feeding the centrifugal pump unit

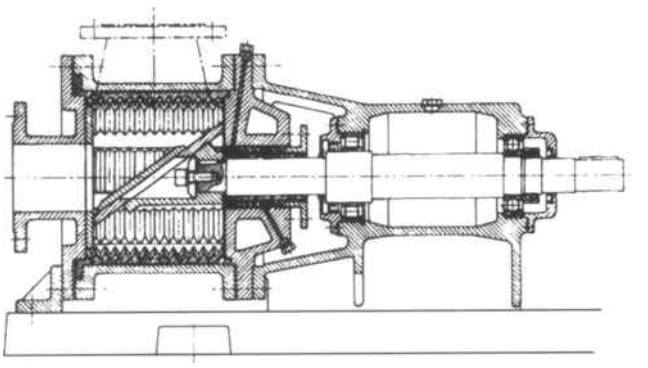

Figure 1.48 Oblique disc pump (Gorator pump) for simultaneous disintegration and pumping

In direct contrast there are other types of non-clogging or chokeless pumps where deliberate attempts are made to finely disintegrate the material being transported. Apart from sewage handling pumps with a integral fine disintegration device or macerater there are pumps specially developed for the handling of sludge and waste within the food processing industry, Figure 1.47 and Figure 1.48.

1.3.32 Submersible non-clogging pumps

Nowadays the submersible pump is predominantly more important then the conventional dry pump type. Submersible pumps are usually capable of functioning in dry locations and so can be used in low locations where there is risk of flooding, for example in the case of an electricity power cut.

Submersible pump construction is recognised by the fact that the impeller is located directly onto the combined motor and pump shaft, Figure 1.49. The drive motor, a squirrel-cage induction motor, is completely sealed by axial and radial O-rings and the pumped liquid is sealed from the drive motor by double mechanical seals which run in an oil-bath. The type of bearings, size of shaft and method of sealing are deciding factors in reliability and operational safety of the whole system. Deflection of the shaft due to radial loads should not exceed 0.05 mm at the shaft seal. The shaft seal components should be assembled in a seal cartridge, which enables pre-assembly and pressure testing of the shaft seal prior to fitting a replacement, Figure 1.50.

From the point of view of pump service and repair, it is advantageous to be able to fit separate motor units of varying sizes to a number of different pump casings. Such a range system makes it possible to maintain a complete community with a small stock of motor parts. Some pump systems also require facilities for converting on site from through-flow to free-flow impeller.

1.3.33 Mixed-flow pumps

Mixed-flow pumps are used for large flows and low differential heads. The differential head can be increased by using multiple

LIBERTY EXHIBIT 1014, Page 55

This book belongs to Robert Durham (rdurham@thewaylabs.com)
Copyright Elsevier 2024

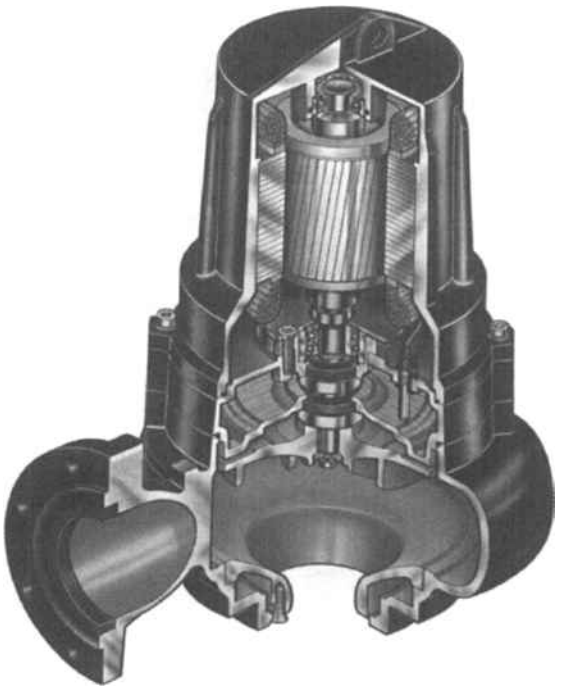

Figure 1.49 Submersible sewage handling pump suitable for both dry and submersed installation

Figure 1.50 Single cartridge mechanical seal for submersible pumps

impellers - a multi-stage mixed-flow pump. These pumps are nearly always installed with the impeller immersed in the liquid, flooded, and the motor located above, so called extended shaft pumps for immersed installation. For relatively clean fluids the central support tube also functions as a delivery pipe while for contaminated liquids the delivery pipe is separate, similar to Figure 1.17 in Section 1.3.13.

Typical of immersed installation pumps, at least for the larger sizes, is that the delivery connections and mounting plates are located according to each particular installation. If the total height of the pump exceeds the available height required for assembling and disassembling then the support and the delivery pipe as well as the shaft may be divided into segments. For long shafts it is necessary to fit intermediate bearings to prevent vibration and to increase critical speeds. There is a clear trend towards replacing extended shaft pumps with submersible pumps in the smaller sizes.

The hydraulic design and number of stages is varied according to the duty requirements. Typical applications include wells and boreholes, condenser circulating water, condenser extraction and drainage pumps. Pump sizes start at 20m^3/h and approximately 30 m differential per stage. Pumps are available in all popular pumping materials.

1.3.34 Axial flow pumps

Many of the comments in Section 1.3.33 can be applied to axial flow pumps. Most pumps are vertical, the vast majority are single stage. Some horizontal versions are available which look like pipe elbows. Axial flow pumps can be equipped with adjustable blades which can be set, either when the pump is at rest, pre-set, or during operation, variable, by means of mechanical or hydraulic actuators. The differential head produced by axial flow pumps is much less than mixed-flow or centrifugal pumps; typically 15 m per stage. Because of the simplicity of the construction they are easy to build in large sizes. Axial flow pumps are generally used for flows greater than 400 /h; flows of 30000 m^3/h are not uncommon.

A special version of multi-stage axial propeller pump has become popular in the last few years. A heavy duty version of the pump has found some applications in the multi-phase flow field. The cost of oil well exploitation can be significantly reduced if the well products can be piped or pumped to a central gathering station or pre-treatment plant. The cost of individual wellhead installations can be prohibitive if gases and liquids are separated and then pumped/compressed.

A pump which can handle crude oil, light hydrocarbon liquid fractions, sour water and natural gases is extremely useful. The pump looks like an extremely rugged version of an axial compressor. The rotor drum is of relatively large diameter and the blade height is unusually short. The rotor stages have few blades but each blade extends for 60 or 70 degrees around the circumference. The casing stages have more nozzles and resemble the high pressure nozzles from a steam turbine. Horizontally-split casings are used for ten or more stages. Good experience has been accumulated with flows of 500 m^3/h and differential pressures up to 14 bar. Gas volume fractions are generally in the region of 80 to 90% at suction but pumps have continued to operate with 100% gas for 15 minutes. These multi-stage axial flow pumps operate at speeds up to 4000 rpm.

If higher differential pressures are required, or the mixture contains solids, then twin-geared screw pumps, in Section 1.5.4, should be considered.

1.3.35 Non-metallic rotodynamic pumps

Non-metallic pumps are most suitable when used for pumping acids, alkalis and corrosive salt solutions. A general review of physical properties and corrosive resistance of various non-metallic materials is given in Chapter 7, Sections 7.2.12 and 7.3.

Larger sizes of non-metallic pumps must, because of the physical properties of the material, be equipped with an outer reinforcement casing to carry the nozzle loads and to absorb forces due to the fluid pressure, Figure 1.51. This outer casing is not necessary for smaller pumps or if the particular non-metallic material has suitably good physical properties or is fibre reinforced internally. Since the liquids handled are of a dangerous nature, great care must be given to the type of shaft seals. The construction generally being similar to that of the ISO 2858, ANSI B73 and API 610 standard pumps. The pump shaft is usu-

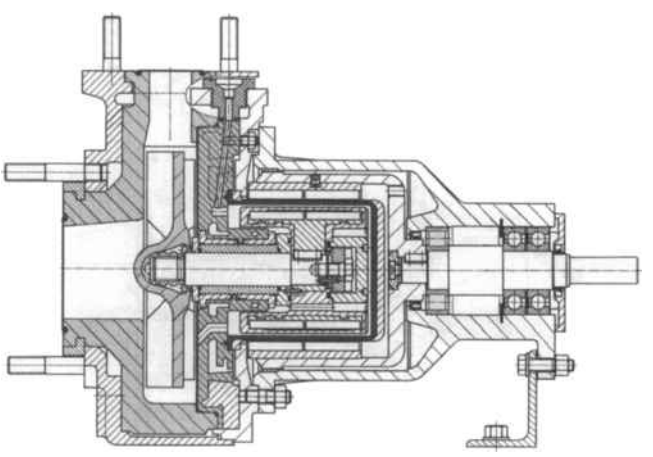

Figure 1.51 Non-metallic pump with surrounding reinforcement casing

LIBERTY EXHIBIT 1014, Page 56

This book belongs to Robert Durham (rdurham@thewaylabs.com) Copyright Elsevier 2024

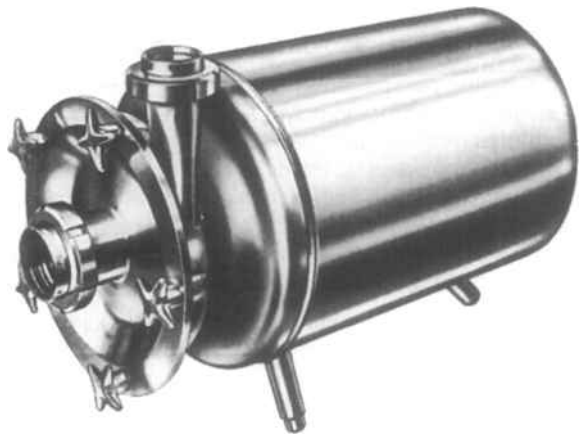

Figure 1.52 Hygienic-quality centrifugal pump

ally 18-10-2 stainless steel minimum and can be completely isolated from the liquid by a non-metallic shaft sleeve under the mechanical seal.

Pumps are available for 400 m^3/h at differential heads up to 80m; pressure ratings of 7 bar and temperatures up to 100 °C are possible.

1.3.36 Hygienic-quality rotodynamic pumps

Within the food processing, chemical and pharmaceutical industries, special centrifugal pumps are used, Figure 1.52. Their shape and construction is distinctive and determined by the hygienic and sterile requirements.

The materials used are usually stainless steels with O-ring gaskets etc. of approved hygienic quality. Both exterior and interior surfaces must be smooth and polished to approved hygienic standards, it should also be possible to disassemble the pump quickly for cleaning and washing. When cleaning without disassembling, Cleaning In Place or CIP, is specified, it must be possible to carry out this process quickly and effectively. This means that all components and clearances must be designed for this purpose, especially with respect to temperature. To simplify external cleaning, the electric motor is often encased in a polished stainless steel casing.

For reasons of hygiene many foodstuffs pumps may not have oil lubricated shaft bearings. Food processing centrifugal pumps are normally available up to approximately 30 kW. Centrifugal pumps cannot be used for viscous and shear sensitive products such as yoghurt, cheese, liver paste etc.. In such cases lobe rotor pumps are generally used, see Section 1.5.8.

CEN Standard EN 1672 covers the requirements for hygiene for machinery used in the preparation of food for human or animal consumption. The Standard describes methods of construction and the types of acceptable fittings, couplings and flanged joints.

Single-stage end-suction pumps can handle over 400 m^3/h at heads up to 100m. Close coupled end-suction pumps can be constructed like a segmental pump, shown in Sections 1.3.12 and 1.3.21, with up to three stages. These pumps can handle 50 m^3/h at heads up to 180m. ISO is producing new standards for hygienic machinery requirements. ISO 14159 deals with machinery design. The American Standard T-02-09, which defines the requirements for 3-A Sanitary Standards originally for the dairy industry, is popular in many countries.

Traditional hygienic pumps have been used in food manufacturing processes. European standards use the term Agrifoodstuffs to include food products for animals as well as food for human consumption. The biotechnology industry has become an important user of hygienic pumps. EN 12690 deals with the risks to personnel and the environment due to the emission of micro-organisms from assembled working pumps or inadequately cleaned pumps which are disassembled. A biohazard is defined as danger or harm associated with a biological agent able to cause infection, allergy or toxicity in animals, humans, plants or the environment.

1.3.37 Magnetic drive rotodynamic pumps

Magnetic drive pumps are a type of glandless pump. Glandless pumps are characterised by the fact that their design and construction physically prevents leakage to the surrounding environment. Packing or a mechanical seal type of shaft seal cannot in this context in any way be considered as leakage free, even if it is barrier liquid or very dilute process liquid/vapour in minute quantities which escapes. The description glandless pumps is therefore associated with the alternative description hermetically sealed pumps or canned pumps.

Glandless pumps must be used for the most dangerous liquids from the point of view of toxicity, environmental hazards and radioactivity. In some cases for high or very low temperatures. Leakage may occur however when handling certain types of highly penetrative liquids due to penetration through minute faults in static seals. Magnetically driven pumps can avoid this problem by having the containment can welded to the casing. When ordering pumps for these types of liquids the level of acceptable leakage should be specified.

Two types of magnetic drive are available:

- Synchronous magnetic couplings
- Magnetic induction couplings

In both cases the pump is driven by a standard motor. However the motor does not drive the pump shaft carrying the impeller(s) directly. The motor drives a rotating magnet assembly. In synchronous magnetic couplings, Figure 1.53, the rotating magnetic field drives another set of magnets coupled to the impeller(s). In magnetic induction couplings the rotating magnets create a magnetic field in a rotor of copper bars, very similar to a standard squirrel cage motor rotor. The magnetic properties of materials decay as temperature increases so that synchronous magnetic couplings suffer from a loss in torque. Magnetic induction couplings are better at elevated temperatures because the magnets are not in contact with the liquid.

The pump shaft proper is totally immersed in the process liquid and runs in bearings which are process lubricated. Silicon carbide ceramics and some carbon are popular as bearing materials. Solids in the liquid can cause high bearing wear and in some designs can accumulate in the can and cause obstructions. This problem can be solved by using an external feed to the bearings. Process liquid can be diverted from the pump discharge, filtered and cooled if necessary, and re-injected into a lubrication circuit. This extra complexity will be worthwhile when considering the enhanced reliability and extended bearing life. Bearing wear monitoring is a useful facility on any magnetically driven pump.

A variety of magnetic materials are used of which aluminium, nickel and cobalt are probably the most widely and successfully

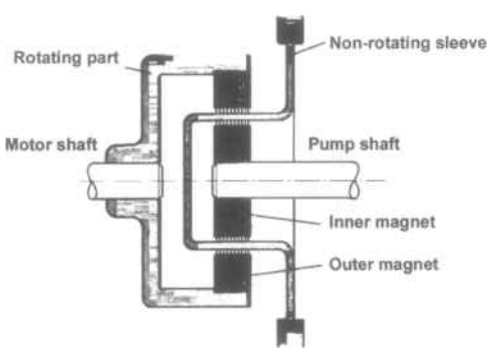

Figure 1.53 Synchronous magnetic coupling for "sealless" torque transfer

This book belongs to Robert Durham (rdurham@thewaylabs.com)
Copyright Elsevier 2024

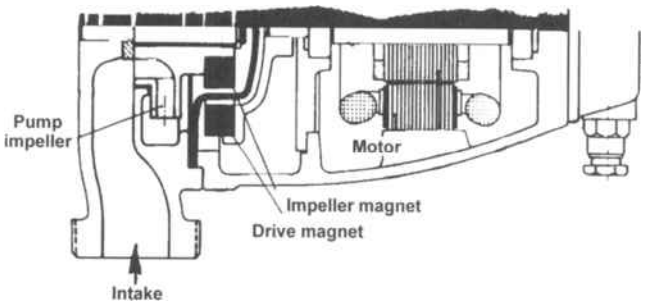

Figure 1.54 Close coupled magnetically driven pump

employed. Some designs use rare earth elements, such as samarium cobalt and neodymium iron boron for the upper end of the torque range, the higher costs involved being more than offset by improved performance.

Magnetic drive pumps cannot run dry. The pump and can must be thoroughly vented and primed before start up. The process liquid provides lubrication and cooling for the pump internal bearings. The process liquid also removes heat generated by the magnetic coupling. Failure to provide the appropriate liquid filling will cause significant wear of bearings and may cause the pump to seize before venting and priming is accomplished. Dry running monitoring could save major maintenance expenses.

Close coupled magnetically driven pumps, Figure 1.54, have become increasingly popular for critical applications where unscheduled process stoppages create additional plant problems as well as loss of revenue. Mechanical seals are seen as a maintenance intensive item, difficult to install and set-up, with costly spares and attendant inventory costs. Removing the mechanical seal and operating pumps of a modified design can save overall costs. Cases have been cited where a magnetic drive pump costs 30% of a conventional pump over a ten year operating life.

Magnetically driven pumps are available from several manufacturers, including non-metallic versions, pumps up to 350 kW are currently built. Hydraulic capacities of 550 m^3/h at 500m are possible, temperatures of -80 to 450 °C are promoted. API 610 and ISO 2858/ANSI B73.1 conditions can be met.

NOTE: Rotary positive displacement pumps can be driven by sealed magnetic couplings. Gear and triple screw pumps are typical examples. If a centrifugal pump is not the best selection for a particular liquid there may be a suitable positive displacement pump.

1.3.38 Canned motor rotodynamic pumps

Canned motor, "wet motor", driven pumps generally have the stator windings sealed from the pumped liquid by means of an annular tube - hence the name "canned", Figure 1.55. There are many types available with power outputs of up to several thousand kilowatts. Smaller sizes, up to about 500 W are generally used as domestic hot water pumps and central heating circulating pumps, see Section 1.3.1.

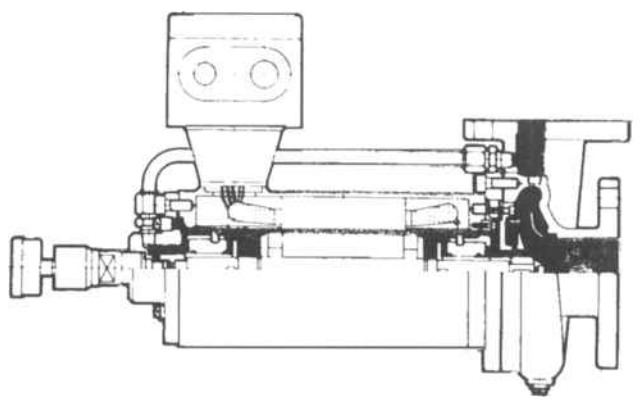

Figure 1.55 Canned motor pump

Canned motor pumps are produced as both single and multi-stage types with various types of drive motor. Liquids with temperatures ranging from -200 °C to +500 °C and pressures up to 1000 bar can also be handled. Heating jackets are available for handling liquids with high melting points, whilst built-in filters are primarily used to cope with contaminated liquids; although trickle feeding to the rotor chamber may also be necessary for liquids containing high concentrations of solid particles.

Canned motor pumps are selected when the liquid handled is hazardous and/or the user requires the highest possible availability. The canned motor pump is a sealed unit with static pressure seals; no mechanical seal. There is no coupling between motor and pump so there are no alignment problems. When selected properly the canned motor pump can provide an availability of 0.9997 which evaluates to a loss of running time of 2.6 hours per year. Very high availabilities are achieved in systems which operate continuously for months or years. Starting and stopping, which can create hydraulic, mechanical and thermal shock, tends to reduce reliability if not considered thoroughly.

Larger canned motor pumps were primarily developed for boiler circulation pumps and liquid metal circulating pumps for nuclear reactors. Circulating pumps are required on modern large multi-tube boilers to ensure a reasonable water velocity inside the tubes to improve heat transfer and eliminate hot spots and problems with localised vaporisation. The suction pressure of the pumps is boiler pressure, 150 barg or more, and the differential only 20 or 30 metres. The high suction pressure produces a large axial thrust requiring enormous, (by comparison to the standard), thrust bearings and also causes mechanical seal problems. Liquid metal pumps for nuclear reactors must be positively leak-free because of the radioactive nature of the liquid. The canned motor pump solves these problems.

The canned motor pump is also available as a chemical and process pump, very similar to magnetic drive pumps and in special variants for sewage, effluent and paper stock. Flows of 300 m^3/h at 110m with pressure ratings of 25 bar are fairly common. Some canned motor pumps are available to DIN 24256 standard pump performance and dimensions. See Figure 1.56.

Current designs include those which have no sliding bearings. The motor/pump shaft is raised magnetically and held centrally

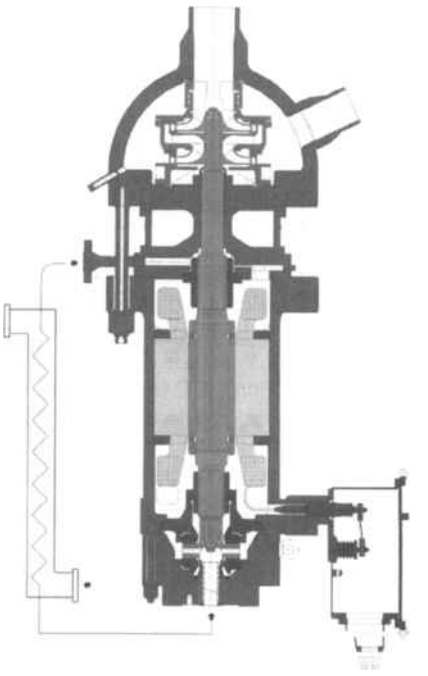

Figure 1.56 A large vertical canned motor pump
Courtesy of KSB AG

LIBERTY EXHIBIT 1014, Page 58

This book belongs to Robert Durham (rdurham@thewaylabs.com) Copyright Elsevier 2024

within the stator/casing. Axial location is also controlled magnetically. The mechanical efficiency is improved because mechanical bearing losses are eliminated. This style of construction allows very high pump speeds to be used without worrying about bearing performance or life.

NOTE: Magnetic drive and canned motor pumps. The American Standards body, the Hydraulic Institute, has issued a Standard covering sealless pumps, ANSI HI 5.1-5.6. This Standard is designed to eliminate misunderstandings between purchasers and manufacturers and to help the purchaser specify a pump correctly. The Standard covers; pump types, definitions, applications, installation, commissioning, operation, maintenance and testing. Details of monitoring devices unique to sealless pumps are given; testing specific to sealless pumps; can integrity and winding Integrity for canned motor pumps. The application section deals with gaskets and joints, venting and draining and internal process liquid lubricated bearings.

The Standard includes descriptions of piping arrangements for process liquid circulation and recommendations on how to prevent problems caused by solids, magnetic material and gas/vapour evolution. B73.3 covers sealless versions of the ASME/ANSI B73.1 and B73.2 style pumps.

1.3.39 Rotodynamic pumps without drivers (for specific applications including mobile agricultural applications and mobile fire pumps)

Pumps specially adapted to be driven from the power take-off of a tractor are used for temporary installations, during the preparation period for a permanent installation and for mobile applications. The speed of the tractor power take-off is too slow, approximately 500 rpm, for a small centrifugal pump. The specially adapted pumps have built-in gears to increase the speed to 3000 to 4000 rpm, see Figure 1.57.

1.4 Special rotodynamic pumps

It is possible to construct rotary machines which use the kinetic energy of all liquids but which do not obey the conventional mechanics of the centrifugal pump. Impellers do not look like conventional pump impellers. Kinetic energy can be transferred to the liquid in increments, by the use of many vanes, or all the energy can be achieved by a single stage. These pumps occupy a position between rotodynamic pumps and rotary positive displacement pumps; their theory of operation having some of the characteristics of both types.

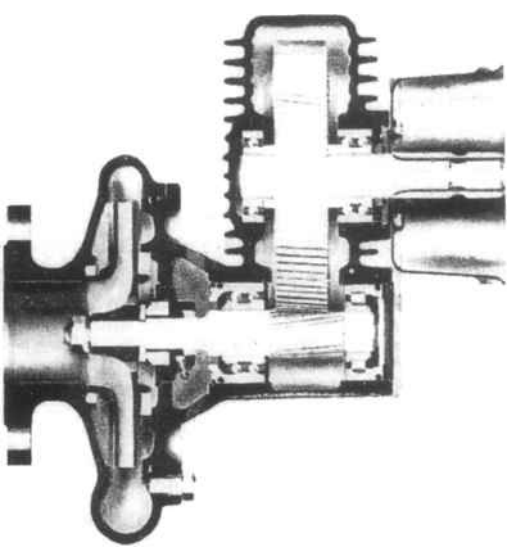

Figure 1.57 Typical tractor driven centrifugal pump with built-in gears

The positive displacement feature makes it possible to pump air or gas provided that a certain quantity of liquid is available to act as a seal. These pumps have therefore good self-priming characteristics. High heads are possible with a single-stage but efficiency is lower than other pump styles.

1.4.1 Peripheral pumps

Peripheral pumps are also called regenerative pumps. In principle, liquid within the casing is separated into elements by means of rotating vanes but the radial clearance permits a large percentage of recirculation. Energy is successively imparted to the liquid by contact with each vane in a manner which is reminiscent of rotodynamic pumps. When pumping, energy is transferred to each enclosed element of liquid by the action of the passing vanes. The increase in head for a given outer diameter and speed is 5 to 10 times that of an equivalent rotodynamic pump. There are usually many vanes mounted on the periphery of the rotating disc.

In practice the vanes are formed by making cut-outs in the periphery of the disc and supply energy during almost a complete revolution. The H-Q characteristic of peripheral pumps is characteristically steep, Figure 1.58, which is ideally suitable for automatic operation on conjunction with an accumulator. Also the NPSHr characteristic is steep. This type of pump is not usually permitted to operate at very low flow rates. Because of the pumps steep H-Q characteristic the power demand increases with reduced flow rate and increased differential head. This can cause overloading of electric drive motors designed to meet the demand at the design operating point.

Reduction of flow rates to low values should therefore be carried out by means of by-pass control, i.e. by returning liquid from the delivery side to the suction side using a control valve

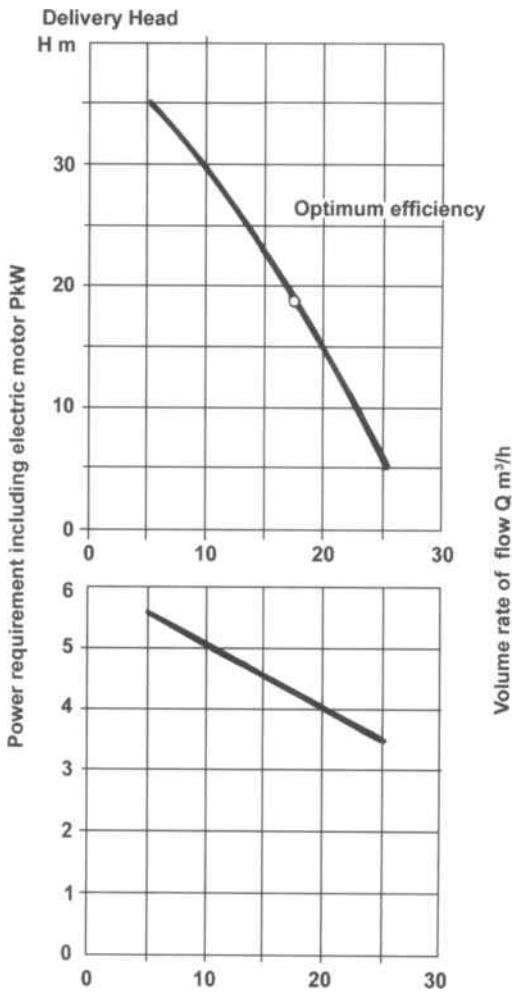

Figure 1.58 Example of performance curve for a peripheral pump

This book belongs to Robert Durham (rdurham@thewaylabs.com)
Copyright Elsevier 2024

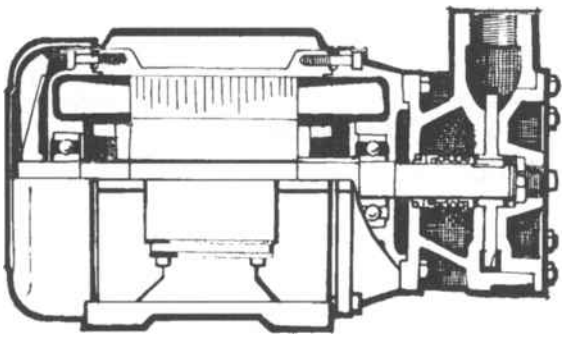

Figure 1.59 Section through a single-stage close coupled peripheral pump

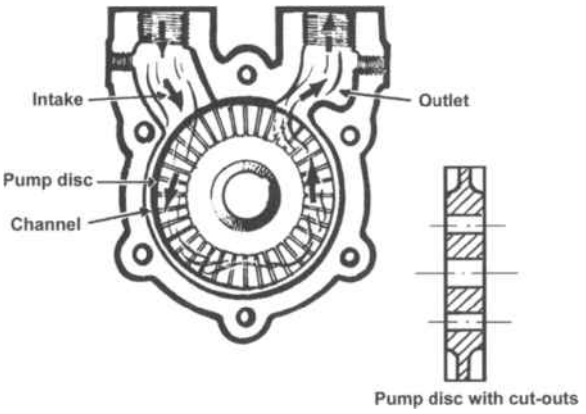

Figure 1.60 Peripheral pump stage

connected in the return pipe. Special designs with integral by-pass valves are available. However, operation under integral by-pass control should be carefully monitored to avoid excessive temperature rises. If prolonged operation at low flows is necessary, a by-pass which recycles to the suction source not the pump suction, is preferred. Pump efficiencies will generally be below 40%. A longitudinal section through a single-stage peripheral pump is shown in Figure 1.59. A transverse section through the stage is shown in Figure 1.60.

Peripheral pumps are used extensively for domestic and commercial clean water applications. Many pumps are used for marine applications: bilge, wash-down, engine seawater coupling, fuel oil transfer. Versions for direct engine mounting are readily available. Pumps in brass, bronze and stainless steel provide flows up to 70 m^3/h and heads to 70m in popular sizes.

Figure 1.61 shows an end-suction multi-stage peripheral pump. This pump us unusual in that the first stage is a centrifugal impeller.

1.4.2 Pitot tube pumps

Pitot tubes are also called, erroneously, jet pumps. If a small close-coupled pump is driven by an electric motor and does not require motive fluid input, compressed air, steam, high pressure water then, it is not a jet pump. Pitot tube pumps are unusual in that the casing rotates and not the impeller. Within the rotating casing of a Pitot tube pump the pumped liquid is accelerated to a high tangential velocity. The velocity depends upon the shape of the blades in the walls of the casing and the effects of frictional forces. This velocity is captured by a stationary tangential Pitot tube which delivers a flow at increased pressure, Figure 1.62.

Assuming that the tangential velocity of the liquid at the level of the Pitot tube is equal to the peripheral velocity of the casing then the theoretical pressure rise is:

$$\Delta p_{theor} = \rho\left(\left(\frac{\pi Dn}{120}\right)^2 - \frac{V^2_{in}}{2} - \frac{V^2_{out}}{2}\right) \qquad \text{Equ 1.1}$$

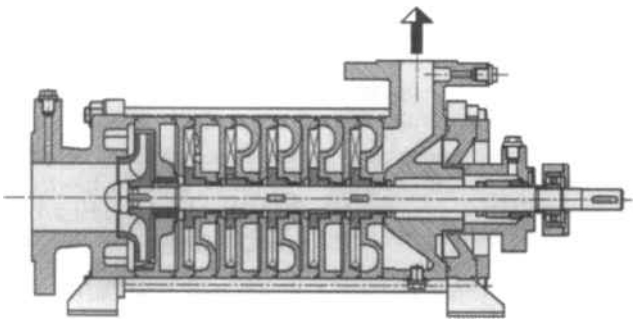

Figure 1.61 A hybrid peripheral pump
Courtesy of Sero PumpSystems GmbH

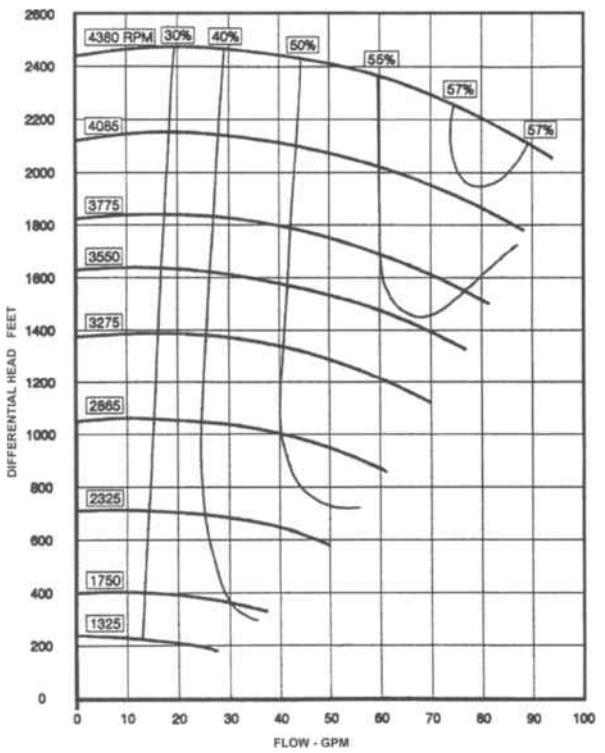

Figure 1.62 Performance curves for a Pitot tube pump

Normally pressure is reduced as the result of flow losses and due to rotational slip between the liquid and casing. The design of the Pitot tube and blades is of critical importance with regard to losses. The stationary Pitot tube is sealed inside the rotating casing by a mechanical seal. As the casing may be rotated at speeds up to 10000 rpm the mechanical seal selection is very important. For small flows and high pressures, low specific speed centrifugal pumps exhibit low efficiency due to the large impeller friction losses. The Pitot tube pump is more efficient in this respect. Maximum efficiencies of 50 to 60 % are possible. The performance curves for a Pitot tube pump are similar to those for a centrifugal pump, see Figure 1.62. Curves can be unstable and minimum flow requirements must be observed. Absorbed power increases as flow increases. Safety valves, as a protection against overloading or overpressure, are not necessary and the pump can be regulated by throttling.

The advantages of the Pitot tube are:

- Large differential head in a single stage
- Reasonable efficiency for small flows
- Non-lubricating liquids can be pumped

The Pitot tube pump cannot compete with the centrifugal pump for normal flows. Pitot tube pumps are not suitable for contaminated, abrasive or viscous liquids. Some manufacturers see

LIBERTY EXHIBIT 1014, Page 60

This book belongs to Robert Durham (rdurham@thewaylabs.com) Copyright Elsevier 2024

their pumps as being in direct competition with piston and plunger pumps. The Pitot tube pump is not a direct competitor because it still has a rotodynamic style characteristic while being able to achieve quite high pressures in a single stage. The velocities involved are much greater that the 2 m/s from a reciprocating pump. Pitot tube pumps can achieve about 820 m or 80 bar based on water at flows up to 105 m^3/h. Small close-coupled pumps, see Figure 1.3 are used for domestic water boosting applications for private sources originating from wells.

1.4.3 Disc pumps

The disc pump is very similar in construction to the end-suction centrifugal pump however the impeller does not have vanes like a centrifugal pump impeller. Two rotating parallel discs are used to create viscous drag which generates the forces to move the liquid. The pump characteristics are very similar to centrifugal pumps. The disc pump can handle small and large solids, stringy solids and is not so susceptible to viscosity degradation as a centrifugal pump of the same size. The pump is classified as non-clogging. Impeller wear in solids handling applications is greatly reduced because solids do not impinge on rotating surfaces. The disc pump can also handle quite large volumes of entrained gas without losing prime.

Disc pumps have proved useful in the paper industry. Dense pulp, up to 18% dry solids, has been handled in existing installations. The disc pump can also be built to 3A-Sanitary requirements. These pumps can handle flows to over 2000 m^3/h at heads up to 300 m.

1.4.4 Pumps as power-recovery turbines

Rotodynamic pumps can run in reverse as turbines. This fact is long-established and is one of the reasons why non-return valves are fitted in pump discharge lines. Pumps and their drivers have suffered damage as a result of turbining due to process upsets or non-return valve failures. The power available from pumps running in reverse can be captured and harnessed for useful work.

Serious interest in power recovery turbines stems from the oil crisis of the 70s and the escalating cost of energy. Some widely used processes are ideal for considering power recovery. In oil refining, the hydrocracker process operates at over 100 barg and gas scrubbing at various pressures over 50 barg. In drinking water production by reverse osmosis from seawater, the process operates at 70 barg. In these cases the process only degrades the pressure slightly leaving a large amount of pressure energy to be throttled or recovered.

When considering power recovery from high pressure process streams there are three basic choices for installation:

- Use the power as the sole power supply to drive a pump or other machine
- Use the power as the sole power supply to drive a generator
- Use the power to assist in driving a pump or other machine

Standard mixed-flow and centrifugal pumps are popular for these applications; both types are in effect fixed geometry Francis turbines. The Francis turbine is an inward flow radial turbine and, depending upon the head to be converted, can be mixed-flow or truly radial. Power generation turbine manufacturers, in general, do not build small machines thus making standard pumps an ideal option. The slight loss of efficiency, 2 or 3%, is more than offset by the economic benefits of purchasing a standard piece of equipment.

If the power recovered is used as the sole power supply it must be remembered that the turbine will not produce power until the flow reaches 40% of design. Also, speed control may be necessary. If the recovered power is used to assist in driving then the speed control of the prime driver should suffice. Assisted driving is probably the most common application because of its simplicity but it is not the most efficient utilisation of either energy stream.

Consider a pump driven by a squirrel-cage motor which has two drive shafts, a double extended motor. The extra drive shaft is coupled, via an automatic clutch, to the turbine. The pump is started in the normal manner. If there is no flow through the turbine it remains stationary. The pump process conditions can be adjusted and allowed to stabilise. If during this period flow, and some pressure, appear at the turbine inlet the turbine will start to spin. As the turbine design conditions are approached the turbine speed will increase until it tries to run faster than the motor. As the turbine tries to overspeed, the clutch locks and power is transmitted to the motor. As the turbine transmits power into the motor, the motor speed increases slightly, unloads by the amount of power supplied by the turbine and the motor power consumption is reduced. If the turbine liquid supply fails the turbine will reduce in speed and when the motor attempts to drive the turbine the clutch will disengage leaving the motor to supply all the power.

In typical applications, such as hydrocracking and reverse osmosis, the pump and turbine are the same pump type. Hydrocrackers use radially-split, barrel machines. Depending upon the size, reverse osmosis systems use multi-stage segmental or axially-split machines. It is possible to purchase multi-stage segmental machines with the pump and turbine in the same casing; precautions must be taken to prevent the turbine running dry.

1.5 Positive displacement pumps

Positive displacement (pd) pumps operate on completely different principles to rotodynamic pumps. The most important difference is speed. Positive displacement pumps do not rely on speed to develop pressure. And now we talk of pressure, not head, because the small velocity head is not converted to static head. Velocities tend to be very low compared to rotodynamic pumps. Also differential head is replaced by discharge pressure. Positive displacement pumps do not try to increase the suction head by a fixed differential head. Positive displacement pumps develop sufficient discharge pressure to force the liquid into the discharge system.

In broad terms, positive displacement pumps compress the liquid from suction conditions to discharge conditions and can achieve this at any speed. As already stated, velocities tend to be low so there are no problems in ignoring the kinetic energies in the suction and discharge pipes. The pressures developed tend to be very large in comparison to the physical dimensions of the pumps; so there are no problems in ignoring potential energy due to elevation in the suction and discharge systems.

Positive displacement pumps can produce very high pressures, over 10000 barg is possible but uncommon. Standard pumps used for high pressure cleaning and descaling operate at 1000 barg to 2000 barg. Pumps used for water jet cutting and cold pasteurisation operate up to 4000 barg. Liquids are compressible. The liquid volume at discharge conditions may be considerably smaller than at suction conditions; less than 85%. If the discharge flow rate is important, rather than the mass flow, compressibility cannot be ignored and must be included in pump and system design calculations. Power is required to compress liquids. The standard power approximation may under estimate the power required to drive a pump when the liquid is very compressible.

NOTE: A review of the first paragraph of Section 1.1, before reading the following Sections is recommended.

1.5.1 External gear pumps

Gear pumps generally have two gears. Some designs are available with three, one gear being driven by the motor, the others by meshing with the driven gear. The driven gear usually runs in

LIBERTY EXHIBIT 1014, Page 61

This book belongs to Robert Durham (rdurham@thewaylabs.com)

Copyright Elsevier 2024

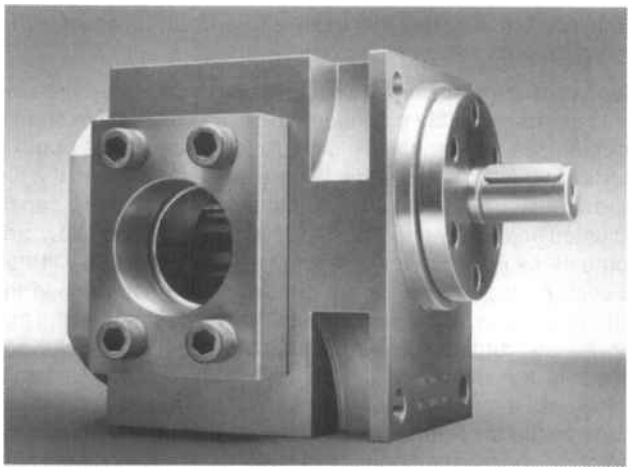

Figure 1.63 Gear pump with external gears

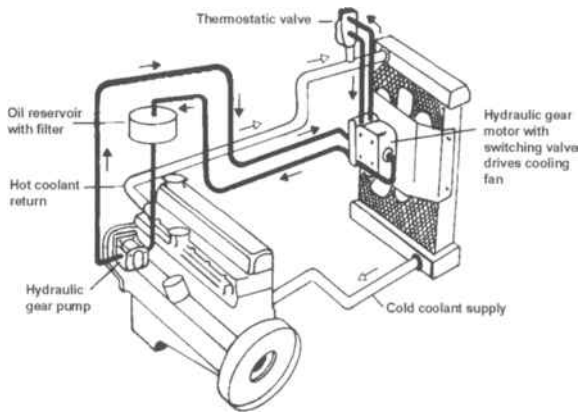

Figure 1.64 External gear pump - hydrostatic fan cooling drive

plain bearings. The bearings and shaft journals are located in the pump casing and surrounded by the pumped liquid. These bearings are thus dependent upon the lubricating qualities of the pumped liquid. Gear pumps are not therefore suitable for handling non-lubricating liquids. For reasonably acceptable pump life, gear pumps should not be used for such dry liquids as water or petrol. Paraffin and diesel oil are examples of liquids whose lubricating properties, whilst not being good, are perfectly acceptable for gear pumps.

The simplest gear pump has two external gears, Figure 1.63. This type is used for relatively free-flowing liquids and can produce quite high pressures. Pumps for process applications start at 7 bar, hydraulic power applications have a standard rating of 170 bar but pumps are available for 300 barg. Gear pumps are self-priming with a suction capacity of 4 to 8 metres. Pumps are built in cast iron, steel, stainless steel, titanium, Hastelloy and non-metallic materials.

Simple gear pumps are used for hydraulic power applications, where the motor can be a gear pump running in reverse. Figure 1.64 shows a low power application for driving a radiator fan on an engine. The thermostatic control valve provides speed control for energy saving and faster engine warm up. This type of drive is useful in hazardous areas where electrical equipment is bulky and costly.

Figure 1.65 shows an external gear pump with four stuffing boxes, external bearings and external timing gears. This style of pump is used for viscous liquids with solids, such as asphalt. External gear pumps can be equipped with heating or cooling jackets and complex sealing systems.

1.5.2 Internal gear pumps

A far greater range of application is possible with gear pumps having a small rotor mounted eccentrically within a larger external gear. A crescent shaped partition separates the two gears,

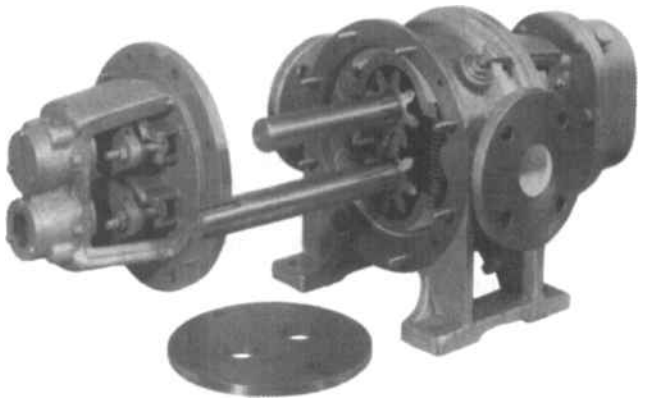

Figure 1.65 External gear pump with four stuffing boxes
Courtesy of Albany Engineering Company Ltd

Figure 1.66. When the rotor is driven, the gear also rotates. The difference between the diameters of the rotor and gear and the eccentric location means that the gear teeth engage only at one point. The tooth of the gear successively rotates out of the gear pocket in the rotor during the first half of rotation. This induces a vacuum and the gear pocket is filled with liquid from the suction line. The liquid is forced out into the discharge line by the gear teeth during the second half of rotation.

The number of teeth is kept to a minimum in order to make maximum use of material to obtain deep pockets between the teeth and achieve large displacement. By using sophisticated tooth profiles the number of teeth for external gear pumps can be as low as 10 to 15. Internal gear pumps can utilise the advantages of more favourable gear tooth engagement and therefore have even less teeth, see Figure 1.67.

The pressure of fluid causes side forces on the gear which are taken up by the bearings. The axial force is usually relatively small, although the variations in side clearance and resulting pressure variations can cause wear. Wear which causes increased gear clearance does not affect the internal leakage as much as wear at the teeth tips and sides.

It is important to know the temperature range within which a gear pump is going to operate. Working components must take up greater clearances than normal if the pump is to operate with liquids at high temperatures. Some manufacturers supply pumps suitable for operating at temperatures of up to 300 °C.

Gear pumps should be used with care for liquids containing solid particles and for abrasive liquids. Pumps are available for hard solids up to 15 mm and soft solids up to 100 mm. Slow speeds are recommended. Wear can be reduced, when handling abrasive liquids, by selecting a pump having a somewhat larger capacity enabling it to operate at lower speeds. Gear pumps are not suitable for use within the food industry where compliance with hygiene regulations is mandatory. They should not be used for handling shear-sensitive liquids.

The respective uses and applications for external and internal gear pumps varies somewhat. Greater pressure increases and increased flow is obtained with external gears, whereas internal gears are more suitable for high viscosity liquids and have better suction capabilities. To obtain a good volumetric efficiency it is always necessary to adjust pump speed or suction pressure to suit the viscosity of the liquid. A high viscosity requires a lower speed or higher suction pressure.

Shaft seals for pumps handling lube oil can be as simple as a U ring. Stuffing boxes or mechanical seals are available to cope with many liquids. To increase pump life when handling non-lubricating liquids, special precautions such as shaft journals, self-lubricating plain bearings and special gear tooth surface treatment may be necessary.

LIBERTY EXHIBIT 1014, Page 62

This book belongs to Robert Durham (rdurham@thewaylabs.com) Copyright Elsevier 2024

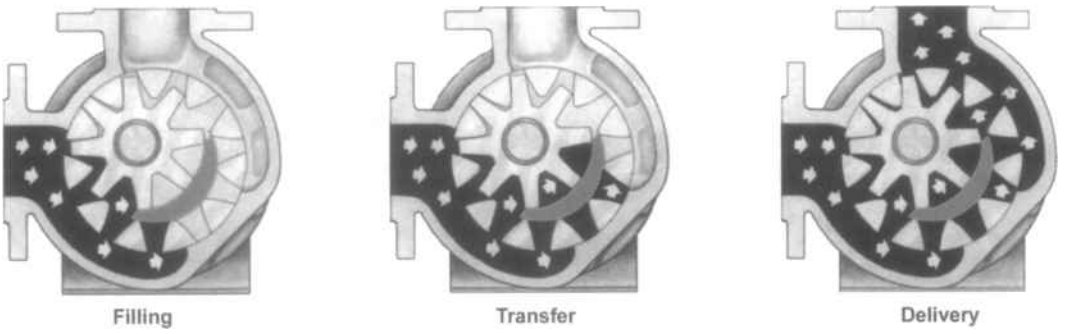

Figure 1.66 Internal gear pump showing the 3 working phases

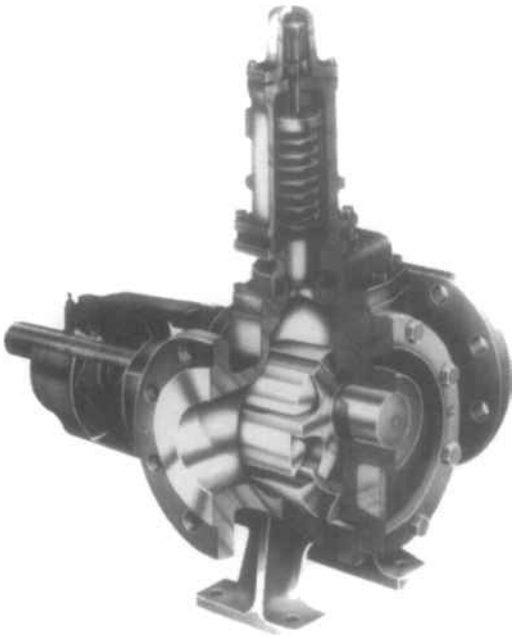

Figure 1.67 An internal gear pump with heating jacket and double mechanical seal

Courtesy of J P Pumps Ltd

There are many models suitable for small flows designed for laboratory use, whilst larger industrial pumps have maximum flows over 3000 m^3/h.

External gear pumps offer an excellent middle-of-the-road choice between performance and cost. Gear pumps are extremely compact for the power they develop. Although unable to match the high pressure capability of piston pumps, gear pumps develop higher pressures than vane or lobe types. By the use of precision-cut gears and close tolerance assembly, particularly between the tips of the teeth and the casing, volumetric efficiencies in excess of 90% are normal.

Gear pumps must be one of the most popular pump types, since every automobile engine has at least one for lube oil. Some gearboxes and differentials have separate pumps for their lube systems. A major area of application for external gear pumps is on mobile plant and machinery. They provide a power source for a variety of lifting services, as well as acting as power-assisted steering pumps. When assembled as a tandem unit the pump becomes a compact, economic solution serving a number of circuits. In the agricultural industry, tractors often depend upon engine driven external gear pumps for powering on-board services. These pumps are also popular for use with PTO shafts, with or without assistance from a gearbox.

A number of magnetically driven sealed gear pump designs are available. These are especially useful for hazardous viscous liquids or liquids which must not come into contact with air. A disadvantage with some designs is that bearing wear can be quickly followed by damage to the magnetic coupling with the result that the complete unit is unfit for further service. With other models, should wear reach the point at which the gears come into contact with the pump casing, the magnetic coupling, by far the most expensive component, will immediately spin free without damage.

1.5.3 Archimedes screw pumps

The Archimedean screw is the oldest known type of rotating pump. The rotor is in the form of a thin helical screw. The thread form being made by plate wound around the shaft. The number of threads varying from one to three. The rotor usually rotates in an open channel having a circular cross-section, enclosing about three-quarters of the rotor periphery.

The rigid screw shaft is usually inclined at an angle of 30° to the horizontal, the length of the screw being approximately twice the lift obtained. The lift heads are rarely in excess of 10 m. Increased nominal flow is obtained by increasing the rotor diameter and reducing speed. Speeds range between 20 and 80 rpm.

Delivery heads are virtually independent of flow up to a maximum flow, maximum capacity loss factor or filling coefficient. The efficiency curve is flat as shown in Figure 1.68. The efficiency is only reduced by about 5% from maximum flow to 50% flow.

There are special types of rigid screw pumps, like that shown in Figure 1.69, where the channel is totally enclosed and rotates with the screw. Provided that the drive and shaft bearings are

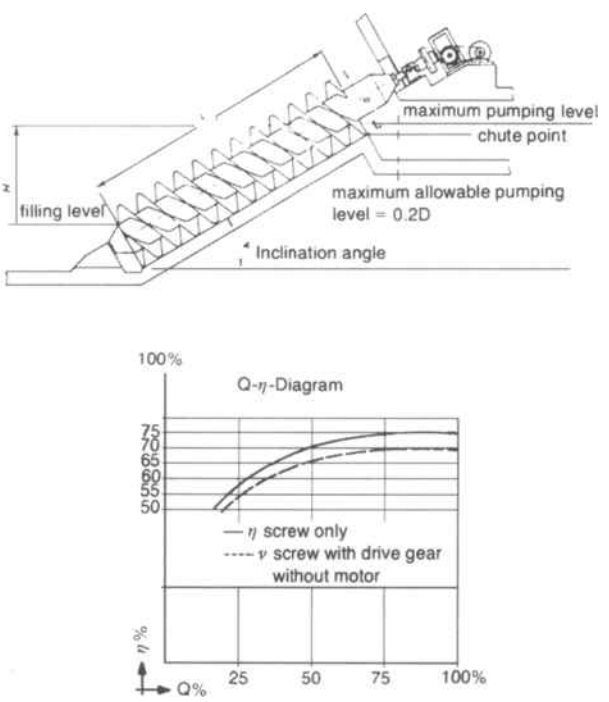

Figure 1.68 Rigid screw pump - construction and efficiency

This book belongs to Robert Durham (rdurham@thewaylabs.com)
Copyright Elsevier 2024

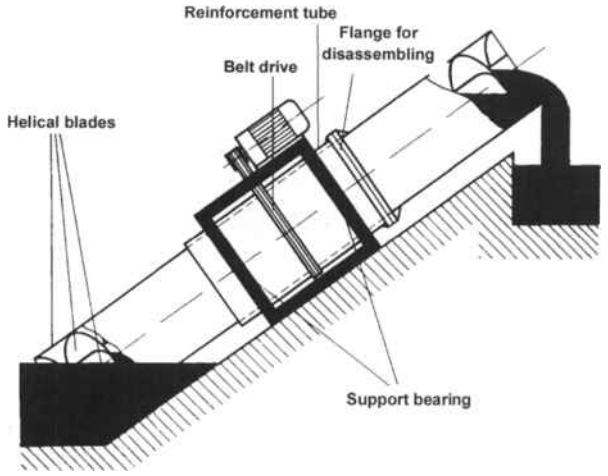

Figure 1.69 Rigid screw pump with rotating channel

completely isolated from the liquid it is possible to transport a wide variety of liquids and mixtures.

Rigid screw pumps are used for transporting liquids containing large solid contaminants, untreated sewage for example. They are also ideal for low delivery heads and large flows, up to 21000 m^3/h. As a sewage pump the rigid screw pump is self-regulating according to the supply flow. When the level in the pump sinks then the capacity loss factor, or filling coefficient, automatically reduces causing the pump flow to decrease.

The advantages of the rigid screw pump are:

- High efficiency
- Simple robust construction
- No seals
- Can run dry
- Flat efficiency curve
- Self-regulating for varying output
- Not sensitive to contaminants

1.5.4 Twin-rotor screw pumps

All screw pumps are grouped together in this section even though the operating principles of two screw pumps is different to three and five screw pumps.

Two screw pumps consist of two identical profiles meshing together and sometimes with external timing gears. Without external timing, the idler screw is driven by liquid pressure between the profiles. The two screws do not touch and a minute flow path from discharge to suction always exists.

The most common type of screw pump has three rotating screws of two different profiles, Figure 1.70. The central screw is the driver whilst the basic function of the two idler screws is to provide sealing by hydrodynamic bearing films. The screw helixes form a number of sealing elements with the pump casing which transports the liquid axially when the screw rotates. The liquid flow is smooth without disturbing flow variations. The screw pump is quiet running and can be run at speeds up to 4500 rpm. By constructing pumps with longer screws more sealed elements can be obtained resulting in higher discharge pressures.

Screw pumps rely on viscosity for sealing, and in triple screw pumps for driving the idle screws. Figure 1.71 shows the effect of viscosity on flow and power at constant speed and differential pressure.

1.5.5 Triple-rotor and 5-rotor screw pumps

Triple screw pumps are used primarily for oil, and other lubricating liquids like ethylene glycol, which should be free from con-

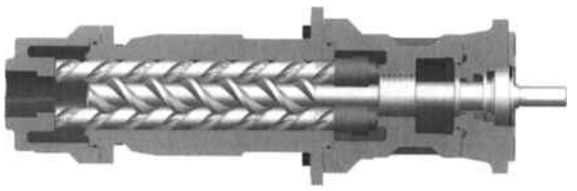

Figure 1.70 A longitudinal section showing three screws meshing
Courtesy of Allweiler AG

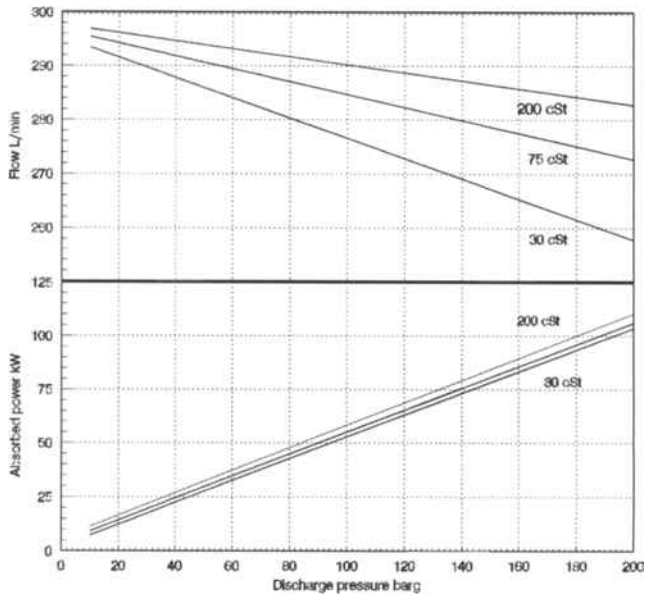

Figure 1.71 Viscous effects on triple screw pumps

taminants. They are self-priming but must not be run dry as this can cause damage to the screws and casings. Screws and casings coated with ceramic can handle water but differential pressure is limited to about 100 bar.

Triple screw pumps are available for flows ranging from 300 l/h to over 800 l/h. Low pressure ranges cover 7 to 10 bar discharge pressure. High pressure pumps are available for 250 bar. Viscosity should not be too low and should be in excess of 1.5 cSt. The maximum permissible viscosity is about 5000 cSt; factory approval should be sort for viscous applications over 400 cSt on higher pressure applications. Screw pumps can be used for liquid temperatures ranging from -20 °C to +155 °C. Mechanical efficiency can be over 85%. Figures 1.72 and 1.73 show vertical and horizontal versions.

1.5.6 Twin-rotor geared-screw pumps

Screw pumps with two screws and an external synchronising gear can handle liquids containing small quantities of solid particles, 2 mm may be possible. Pump users have been looking for pumps which can handle mixtures of liquids and gases, two phase flow. Crude oil production, from some wells, varies considerably with water and CO_2/H_2S content. Centrifugal pumps can only accept approximately 15% gas percentage by volume before losing prime. Twin screw pumps have been developed to handle continuously variable mixtures from 100% liquid to 97% gas.

Screw pumps are made from grey cast iron, nodular cast iron and carbon steel. Special surface treatment of components can improve wear resistance. Shaft sealing is by means of stuffing boxes or mechanical seals.

Axial thrust is taken up partly by hydraulic balancing and partly by thrust bearings. Large pumps are constructed with two opposed screws on each shaft. Liquid enters at the centre of the

LIBERTY EXHIBIT 1014, Page 64

This book belongs to Robert Durham (rdurham@thewaylabs.com) Copyright Elsevier 2024

Figure 1.72 A typical vertical pump with end-suction connection
Courtesy of Allweiler AG

Figure 1.73 A typical horizontal monoblock "tie-bolt" pump
Courtesy of Allweiler AG

shaft and flows outward to the discharge. Equal and opposite flows creating a high degree of hydraulic balance. With regard to the construction of thrust bearings, screw pumps are normally designed for one direction of rotation and flow.

Twin synchronised screw pumps are available up to approximately 2200 m^3/h at pressures of 240 bar. These pumps can handle water and there is no maximum limit on viscosity. Gas entrained in viscous liquid tends to reduce the effective viscosity. Slugs of 100% gas and entrained abrasive solids, such as sand, can be handled.

1.5.7 Progressive cavity pumps

Progressive cavity pumps may seem to be a new pump type. This is the modern name for an old pump. In the past, these pumps have been called, eccentric screw pumps, eccentric gear pumps and helical gear pumps. The new name is better as it describes the action of the pump. The principle of operation was first established in the 1930s by Rene Moineau.

Progressive cavity pumps have only one rotor working within a rubber stator. The rotor, which looks something like an elongated corkscrew, rotates in a flexible stator having double internal helixes. The pitch of the stator helix is twice that of the rotor's. The difference in pitch forms sealed cavities between the rotor and the stator which, with rotation of the rotor, are caused to travel axially along the stator resulting in a smooth axial flow. Since the end of the rotor describes a circle when rotating, drive is usually by means of a cardan shaft with standard universal joints (Hooke's joints) at both ends which lie in the liquid flow, see Figure 1.74.

Alternative methods of flexible power transmission have been developed by different manufacturers to cope with the wide range of operating conditions, see Figure 1.75. (a) shows a simple single pin coupling. This style of coupling is suitable for small pumps when the torque requirement is low. The O ring is used to provide a flexible seal; it keeps the lubricant inside the coupling and the product outside. (b) is an open version of (a). (b) is used for small hygienic pumps when it is important to be able to clean the pump internals thoroughly. (c) and (d) show two different approaches for Hooke's joints. A crossed pin provides four bearing surfaces; two for each side of the coupling.

These are the most popular types of coupling used and are suitable for any pump size and most applications. The pin bearings can be plain or the needle roller type. Lubricant is sealed in the coupling by the flexible outer cover. All of the pin joints suffer a common drawback; the possibility of cyclic angular velocity changes. If a single Hooke's joint is used to transmit rotary power between two shafts which are not parallel, the driven shaft will not rotate at a constant angular velocity. The shaft speed continuously changes as the shaft rotates. The driven shaft can transmit the effects of the cyclic velocity changes to the drive shaft as torsional oscillations. The cyclic angular velocity effects on the pumping element can be largely eliminated by using two Hooke's joints in series, one at each end of the drive shaft.

However this approach is only completely effective when the two joint angles are identical. The rotor is housed within a flexible stator and does have a degree of freedom regarding positioning. The elimination of the cyclic angular velocity effects on the pumping process, can not be guaranteed. They can be

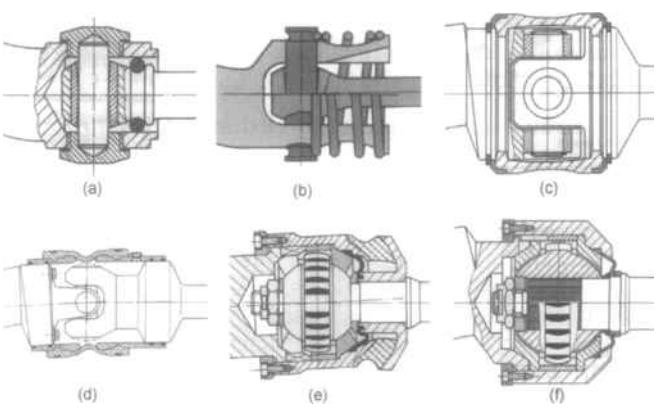

Figure 1.75 Variations of flexible couplings for progressive cavity pumps

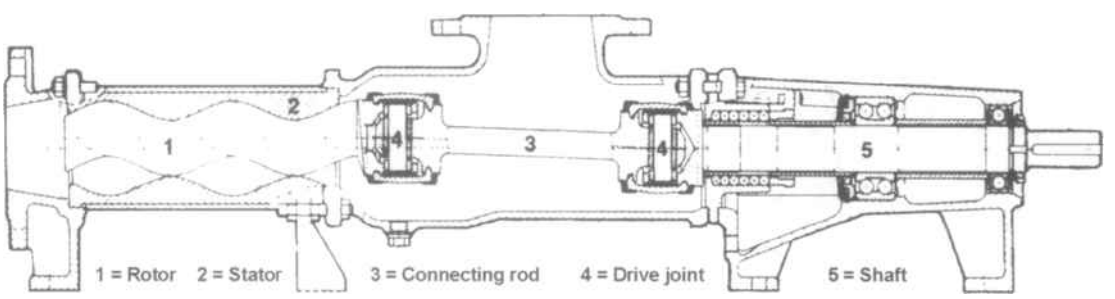

Figure 1.74 A progressive cavity pump

This book belongs to Robert Durham (rdurham@thewaylabs.com)
Copyright Elsevier 2024

completely eliminated by using a different style of coupling, the constant velocity coupling, see (e) and (f). Both couplings use a crowned gear to mesh with a toothed annulus. The load is distributed over many tooth flanks and the angular motion is guided by a spherical bearing. (e) is a double-sealed version for higher operating pressures.

All coupling problems such as bearing wear, lubrication and cyclic angular velocity, can be managed by using a relatively new driving shaft style, the flexible shaft. The flexible shaft is just that. A drive shaft with proportions which are adequate to support the torsional and axial loads but thin enough to be able to bend to follow the end of the rotor. The flexible shaft is bolted or clamped between the bearing housing shaft and the rotor. In some cases the useful life of the flexible shaft may be limited by fatigue and routine replacement may be necessary. Given the full operating condition the pump manufacturer can select the most appropriate drive shaft option.

Increasing the length of the rotor and stator makes possible greater differential pressures. Pressure differential for a low pressure pump is 6 bar. Differential pressures up to 40 bar can be obtained by increasing the length. Pumps are available for flows over 300 m^3/h.

Progressive cavity pumps are used for practically all types of liquid from very fluid to very viscous. They can handle liquids containing abrasive contaminants and are relatively insensitive to solid particles. Larger pumps can allow the passage of random hard particles of 30 mm and soft particles over 100 mm. Special adaptations can be made to feed very viscous product in to the pump suction. Progressive cavity pumps have good suction capacity up to 8 m but their extreme sensitivity to dry running requires venting and priming prior to starting for long stator life.

Many different materials are used in the manufacture of the pump casings and rotors ranging from cast iron to titanium. The stator can be made from a wide variety of elastomers, for example natural rubber, nitrile rubber, Neoprene and Vitonâ. In order to select the correct elastomer it is necessary to know the chemical properties of the liquid to be pumped, the nature of any solids and the temperature at which the pump is to operate. The choice of material is often a very difficult and complex matter due to the wide range of materials available. When in doubt, consult a manufacturer who has experience of the duty.

1.5.8 Lobe pumps (including circumferential piston pumps)

Lobe pumps have two rotors, which, unlike gear pumps, operate without metallic contact with each other. Both rotors are driven by synchronising gears which are completely separated from the pump chamber, see Figure 1.76. The pump shaft bearings are also situated in the gear case. The pumped liquid does not therefore come into contact with the bearings. Synchronising drive gears cause the rotors to rotate in opposite directions. The inlet liquid flow is divided into two halves, trapped in the space formed between the rotor and the pump casing and

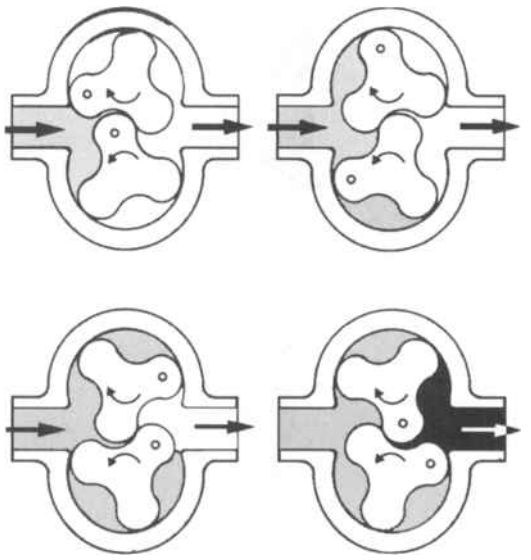

Figure 1.77 Lobe pump working principles

transferred, without change in volume, towards the outlet where the rotors meet, thereby reducing the cavity and forcing the liquid out, Figure 1.77. Lobe pumps are not usually applied to pressures over 30 bar so there are no problems with volume changes due to compressibility.

The absence of metallic contact between the surfaces of the rotors themselves or between the pump casing and the rotors means that wear of the rotating parts is insignificant. The only wear which occurs is due to erosion of the pumped liquid or entrained solids. Since the shaft bearings are normally mounted outside the pump casing, the shaft ends are relatively long and unsupported which imposes limits in terms of working pressure. For pressures in excess of 12 bar some manufacturers fit plain bearings inside the pump casing. Others mount an extra bearing bracket on the outboard side of the pump casing. The latter case giving rise to four shaft seals.

The profile of the rotors varies from manufacturer to manufacturer. The most usual is shown in Figure 1.78. The profile does not alter the principle of operation. It can be said however that rotors with one or two lobes give rise to greater pressure pulsations than rotors having three lobes. For gentle handling of liquids, rotors having one or two lobes should be chosen.

Rotary piston pumps are lobe pumps with greatly modified lobe profiles. The rotors are designed so that much more tip surface area is presented to the bore of the casing. This modification changes the pump viscosity characteristic and also the pumping action. The liquid is no longer squeezed out of the pockets between the lobes but is pushed directly out of the discharge. Figure 1.79 shows two typical rotor profiles.

Lobe and rotary piston pumps are suitable for both fluid and viscous products. Special feeding arrangements are necessary for extremely viscous liquids which cannot otherwise flow. Liquid temperatures of up to 200 °C can be handled if the clear-

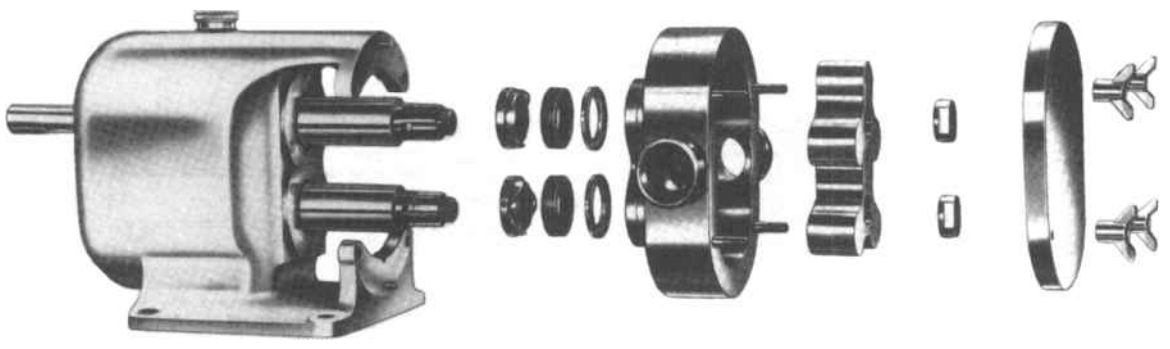

Figure 1.76 Exploded view of a lobe pump

LIBERTY EXHIBIT 1014, Page 66

This book belongs to Robert Durham (rdurham@thewaylabs.com) Copyright Elsevier 2024

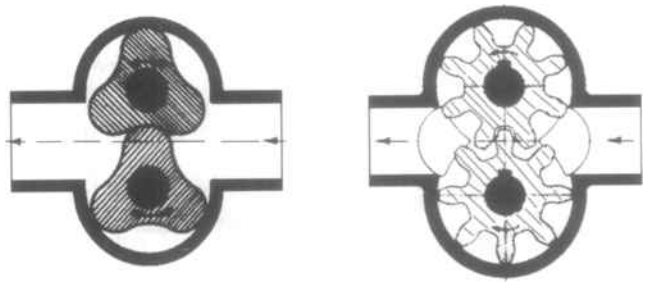

Figure 1.78 Lobe pumps - popular rotor profiles

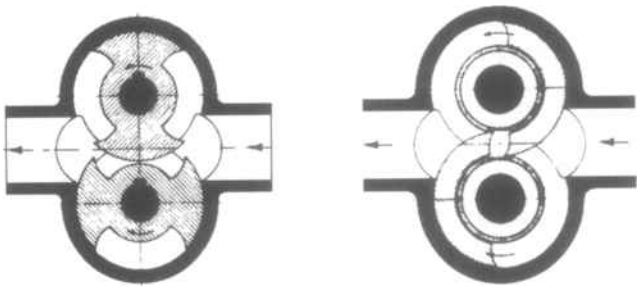

Figure 1.79 Rotary piston pumps rotor profiles

ances between the rotors and the covers are increased. By increasing the rotor side clearances it is possible to handle liquid at temperatures of down to - 40 °C. To maintain constant temperature, pumps may also be fitted with heating or cooling jackets.

Lobe pumps and rotary piston pumps handle the pumped liquid very gently. Examples of this phenomenon can be found within the foodstuffs industry where pumps are used for pumping cooked pea soup, preserves containing whole berries and other similar applications including handling whole fish. In these cases the pumps are specially constructed to fulfil the hygiene requirements; being easily dismantled and suitable for washing by hand or in accordance with the CIP method.

Pumps can also be equipped for completely aseptic pumping for use within the pharmaceutical industry. They are also extensively employed in the chemical industry for handling both corrosive and non-corrosive products. Special dense-pulp pumps have been developed for the cellulose industry, these being suitable for pulp concentrations ranging from 6 to 30%, Figure 1.80. Special derivatives are manufactured for sewage handling. These pumps can have adjustable rubber lobes.

Pumps usually operate at relatively low speeds and they are often used for high viscosity liquids. The pump is quiet running and delivers a largely pulsation-free flow. For most pumps the compon ents in contact with the liquid are manufactured in stainless steel. Pumps for non-corrosive applications can have a cast iron casing with rotors and shafts made of steel. Sometimes the rotor material can be varied in order to increase the pump's suction capacity, for example, by the use of nitrite rubber rotors. Shaft seals consist of various forms of mechanical seals and stuffing boxes. Since the pump has two shafts which pass through the pump casing, two sets of seals are needed for each pump.

The rotary piston pump is a successful variant of the lobe design. Also called the circumferential piston pump, it uses arc shaped pistons or rotor wings, as shown in Figure 1.79. The rotor wings are manufactured in a corrosion resistant, non-galling copper free nickel alloy and are designed to operate with very close clearances. This feature, combined with the geometry of the rotor wings, produces a long sealing path between inlet and outlet resulting in minimal slip when pumping low viscosity liquids. On viscous liquids and when handling products with solids in suspension, the large liquid cavities in the rotor wings combined with low operating speeds and carefully profiled anti-cavitation ports produces a smooth, pulsation free, low shear pumping action. Twin wing rotors are fitted for the majority of duties; single wing rotors are preferred for easily damaged products.

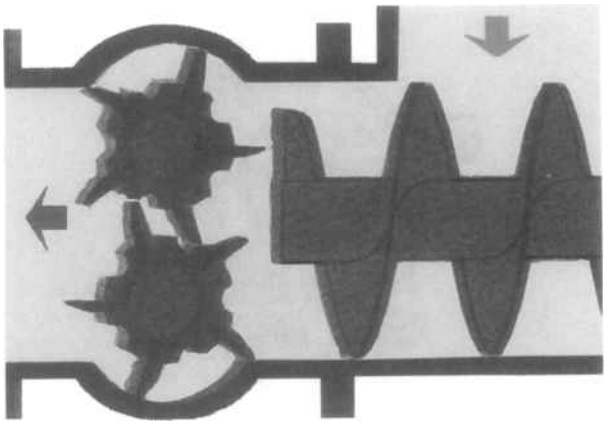

Figure 1.80 Dense-pulp pump with feed screw

Lobe pumps and rotary piston pumps are available in a wide variety of sizes from 0.1 to over 300 m^3/h. A sewage version can handle 900 m^3/h at 6 bar. Discharge pressures are normally up to 30 bar. Suction capacities vary between 1 and 5 m, depending upon internal clearances, pump size and speed. Solids handling capabilities are good with solids up to 100 mm on the largest pumps.

1.5.9 Vane pumps

In a rigid vane pump the rotor is eccentrically located in the pump casing and the vanes slide in and out to maintain contact with the casing wall. In a flexible vane pump the rotor is mounted eccentrically in the pump casing and the vanes flex to maintain contact with the casing wall. The pumping action is created by the variation in volume between the vanes, Figures 1.81 and 1.82.

In both types of pump the liquid is drawn into the pump by an increasing volume between the vanes on the suction side, transported to the discharge side whilst trapped between the vanes and a proportion forced out by a decreasing volume.

The vanes in sliding vane pumps may be controlled by springs, hydraulic pressure or rely entirely upon centrifugal forces induced by rotation. Some types use a rotating cam to guide the movement of the vanes.

There are many types of vane pump where the vanes are located in the pump casing (stator), Figure 1.83.

Another variant of vane pump is the sliding shoe pump where the vanes are U-shaped and operate against two separate sur-

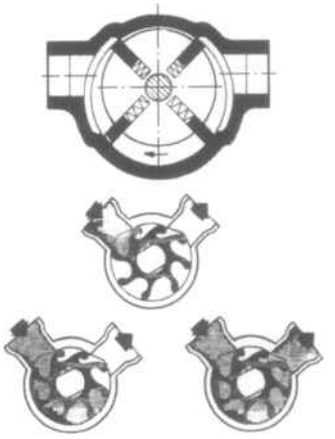

Figure 1.81 Operating principles for vane pumps

LIBERTY EXHIBIT 1014, Page 67

This book belongs to Robert Durham (rdurham@thewaylabs.com)

Copyright Elsevier 2024

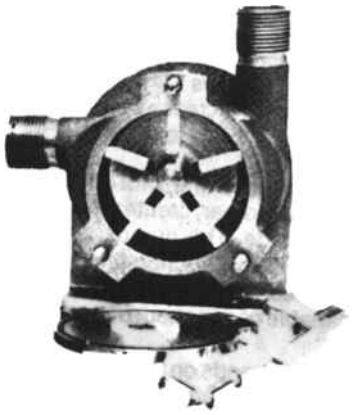

Figure 1.82 Vane pump with sliding vanes in the rotor

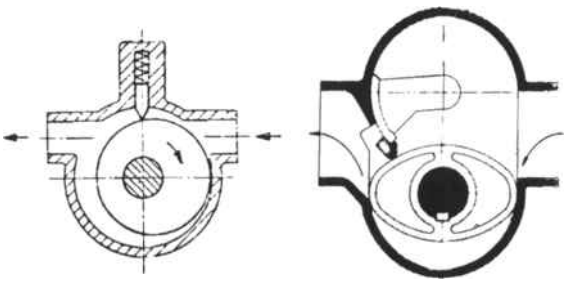

Figure 1.83 Vane pump with vanes in the stator

faces, one against the rotating cam, whilst another surface slides against a valve plate, Figure 1.84.

The pump casing and rotors for vane pumps with sliding vanes are usually made of cast iron, gunmetal or stainless steel, whilst bronze or glass fibre reinforced PTFE is used for the vanes.

Vane pumps with sliding vanes are suitable for most clean liquids and especially suited for those with entrained gases or those having a low latent heat; petrol or ammonia for example. Maintenance costs are relatively low due to the ease of replacement of the vanes, even when being used to pump liquids which are somewhat contaminated, waste oil for example. Vane pumps can operate within a large range of viscosities, although it is necessary to compensate for the speed, i.e. the higher the viscosity the lower the speed. This phenomenon is common to most displacement pumps. Vane pumps are capable of suction lifts of 2 to 5 m. Flexible vane pumps are suitable for discharge pressures up to 5 bar, sliding vane process pumps of over 10 bar. Sliding vane pumps for hydraulic power applications can run at over 3000 rpm at pressures to 200 bar.

In a flexible vane pump, the rotor (flexible impeller), made of a synthetic elastomer, creates a seal between suction and discharge side. The pumps are therefore dry self-priming with a suction lift of 4 to 5 m, i.e. do not require to be vented and primed. With liquid in the pump it is capable of a vacuum of up to 500 to 600 mm Hg.

As the rotor material depends on the liquid pumped for lubrication, it is generally recommended that the pump should not operate without liquid for more than 30 seconds. This is more than sufficient time for self priming with properly designed pipework.

Flow capacities for flexible vane pumps range from 0.1 to over 30 m^3/h, sliding vane pumps are available for over 300 m^3/h.

The single rotor, multi-vane principle, provides largely pulsation-free flow and enables the pump to handle products susceptible to damage.

Chemical resistance information, compiled by manufacturers of flexible vane pumps, provides a guide to the compatibility of various elastomers with liquids commonly used in industry.

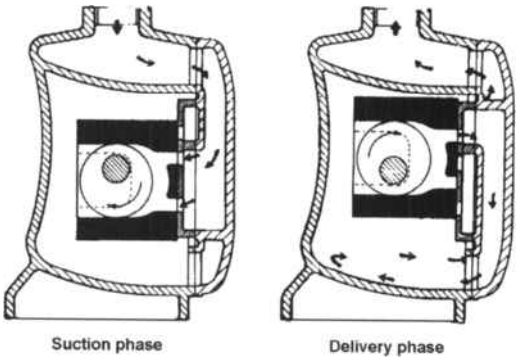

Figure 1.84 Sliding shoe pump

Broadly speaking the temperature range of some of these rotor materials is as follows:

- Neoprene 4 to 80 °C
- Nitrile rubber 10 to 90 °C
- Viton® 4 to 90 °C

However, as with any type of pump when pumping liquids which are not cold, great care must be taken to observe suction limitations and provide sufficient NPIP.

(Viton is a registered trade mark of DuPont Performance Elastomers LLC.)

1.5.10 Peristaltic pumps (including rotary peristaltic pumps)

Peristaltic hose pumps

A peristaltic hose pump transports liquid by mechanically squeezing a space enclosed by a flexible element. The most usual peristaltic pump, the flexible hose pump, operates by means of rollers or cams acting directly upon the hose containing the liquid, Figure 1.85. The number of rollers or cams vary depending upon the manufacturer; industrial pumps have 2 or 3 but small laboratory scale pumps can have as many as 7. Figure 1.86 shows an industrial size pump with two spring-loaded rollers. A pump may be fitted with one or more hoses, sometimes as many as thirty.

At one time the use of peristaltic pumps was confined largely to laboratory and similar specialised applications but developments in rubber technology have resulted in a new generation of heavy duty pumps and peristaltic units are now to be found on a wide range of industrial duties involving viscous and/or abrasive sludges and slurries as well as products with high solids content.

An important factor in favour of the peristaltic concept is the pump's ability to handle solids up to the full bore of the hose tube. With most pump designs, solids handling capacity is restricted to approximately 15% of the pump branch sizes.

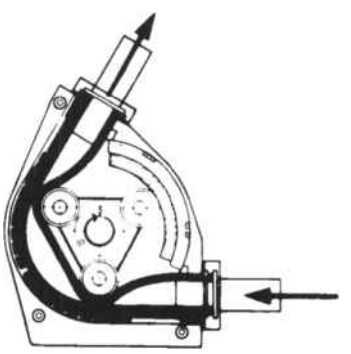

Figure 1.85 Peristaltic hose pump

LIBERTY EXHIBIT 1014, Page 68

This book belongs to Robert Durham (rdurham@thewaylabs.com) Copyright Elsevier 2024

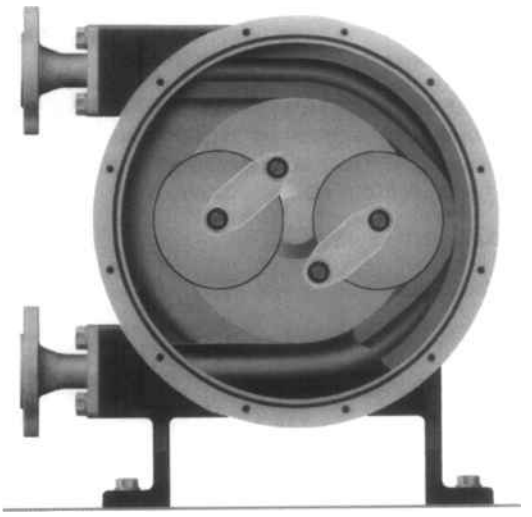

Figure 1.86 Industrial size peristaltic pump

In one modern heavy duty design the roll/squeeze peristaltic movement takes place in a sealed housing partially filled with a mixture of glycerine and glycol. This not only lubricates the cams or sliding shoes from which the roll/squeeze motion is derived; it also acts as both coolant and lubricant to the exterior of the pump hose tube. This prolongs hose life and reduces the incidence of mechanical failure. Hose life in excess of 3,000 hours is quite common.

The same design uses a hose tube with an inner core of soft natural rubber or NBR rubber with an outer covering of hard natural rubber reinforced with braided nylon. During the roll/squeeze phase of the peristaltic cycle, solids present in the pumped liquid are cushioned in the soft inner core of the tube with minimal damage or erosive effect and are released gently back into the liquid stream when the squeeze cycle is concluded. This enables delicate, shear sensitive solids to be pumped without damage and abrasive material to be handled with little or no effect on the hose interior.

The peristaltic design is inherently sealless, with the pumped liquid completely enclosed with no possibility of leakage except in the case of a hose failure. Failure from a cause other than mechanical stress is rare and, under stable operating conditions, can often be predicted with considerable accuracy. Regular hose inspection is of course advisable.

Peristaltic pumps can be used for all types of liquids and to some extent even gases. The suction capacity varies greatly for different constructions. Discharge pressures are usually below 10 bar but pumps have been used up to 40 bar; tube life is extremely short! Large pumps, with 125 mm tubes, are rated at 2.5 bar. The capacities vary from very small metering quantities of 0.001 l/h up to flows of 50 m^3/h. Special pumps are available for over 3000 m^3/h.

Rotary peristaltic pumps

Another type of peristaltic pump, sometimes called an orbital lobe pump, works by means of an eccentric rotor operating within a flexible elastomeric element with the liquid trapped between the elastomeric element and the pump casing. The rotation of the eccentric rotor transfers the liquid from the inlet to the outlet, Figure 1.87.

This pump is leak-free, conditional on the flexible elastomeric element not failing as a result of the mechanical stresses. The elastomeric element should therefore be replaced regularly to avoid unexpected failures. In order to select the correct elastomer and the correct pump casing material it is important to know the chemical properties and temperature of the liquid to be handled. Capacities range from 0.06 to over 50 m^3/h. Suction capacity 1 to 3 m. The pump creates a strongly pulsating flow making it advisable to use flexible hoses in the suction and delivery lines. If fixed pipes are used some type of pulsation damper should be fitted between the pump and the pipe. Rotary peristaltic pumps are suitable for pressures over 10 bar.

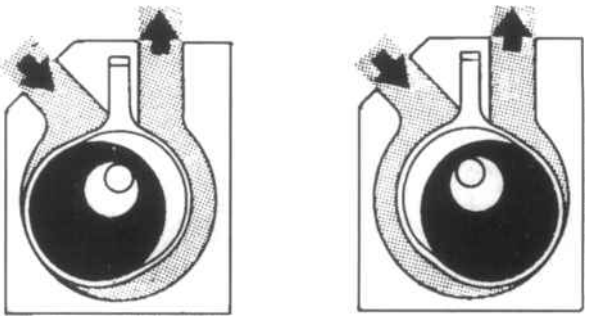

Figure 1.87 Rotary peristaltic pump

1.5.11 Rotary eccentric piston pumps

The rotary eccentric piston pump can be considered as a type of single wing circumferential piston pump or a peristaltic pump without a tube. The casing forms a circular cylinder. The piston is circular but of a smaller diameter than the cylinder. The piston does not rotate but is forced to precess eccentrically around the cylinder with a minimum clearance. A viscous seal forms in the minimum clearance to reduce internal slip. Incoming liquid is swept around the circumference of the cylinder to the discharge port. The pumping action produces very little liquid shear and is extremely gentle.

There are two slightly different versions of the pump in common use. One version uses a bearing bracket very similar to an end-suction centrifugal pump. Piston eccentricity is maintained by spring loading. These pumps have a U-ring seal, mechanical seal or stuffing box to match the liquid characteristics. These pumps cannot run dry without special sealing arrangements. The other version uses a special non-rotating eccentric drive arrangement which does not require a rotating seal. Sealing is accomplished by rubber or metallic bellows which allows the pump to run dry. Both pump styles are self-priming and reversible. Figure 1.88 shows an exploded view and Figure 1.89 a longitudinal cross-section of an eccentric drive pump.

The rotary eccentric piston pump is manufactured in cast iron, steel, bronze and stainless steel and can be built to hygienic and aseptic requirements. Test have shown that CIP with 120°C water is completely effective. The pump is used extensively in the dairy industry for handling milk and milk products. Other pumped products include; alcoholic drinks, cake mixes, chocolate, ink, jam and marmalade, mineral oil, paint, resin, soap, toothpaste and varnish.

Pumps can handle flows up to 85 m^3/h at pressures up to 12 bar.

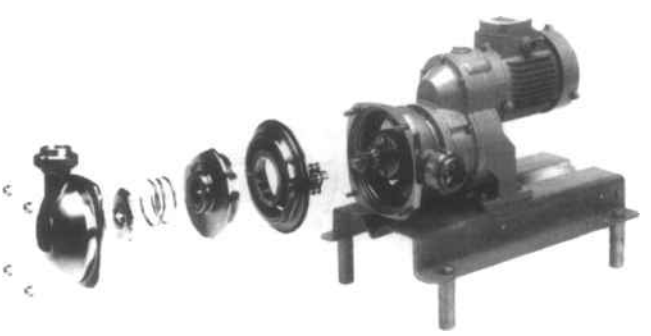

Figure 1.88 Exploded view of an eccentric drive pump

This book belongs to Robert Durham (rdurham@thewaylabs.com)
Copyright Elsevier 2024

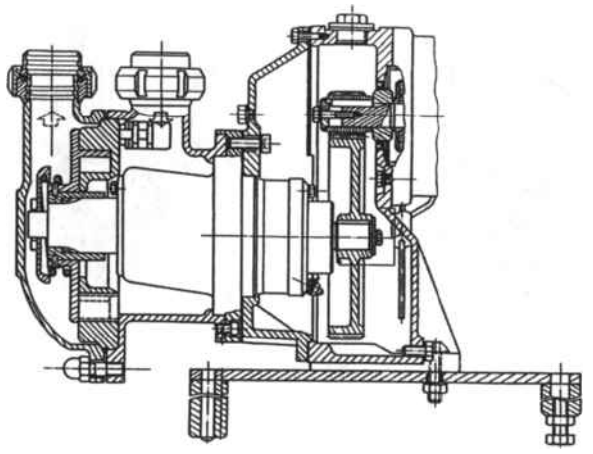

Figure 1.89 Longitudinal cross-section of an eccentric drive pump

1.5.12 Axial and radial piston pumps

These are piston pumps for hydraulic power applications **and** water pumps as well !! They are characterised by their lack of external lubrication and not having any seals on the piston. All moving parts are lubricated by the product. Early systems all used mineral oil as the motive liquid and this may have been a standard industrial lubricating oil. Installations in hazardous areas, where the problems caused by any fire were great, looked for replacement liquids to reduce fire risks. Mixtures such as water/glycerine and water/glycol were tried but equipment needed derating to cope with the poor lubrication properties. Soluble oils were developed which led eventually to 95/5 and 97/3 water/oil emulsions.

Modern oils are biodegradable and can be disposed of in normal sewers. However, they are also costly and so leaks are kept to a minimum. Piston leakage is controlled by the clearance between the piston and the cylinder bore. Any leakage returns to suction. Piston pumps for hydraulic applications fall into two broad categories; axial piston and radial piston. Inline piston pumps, the forerunner of modern axial and radial pumps, are still used for a few applications.

Axial piston pumps consist of a number of cylinder bores in a rotating block. The pistons can be anchored in various ways to produce the stroke as the cylinder block rotates. Most pumps have pistons which are driven sinusoidally. The stroke can be variable. Variable flow can be produced from fixed speed pumps. Some pumps can adjust the stroke so that the pump runs in reverse, i.e. the suction becomes the discharge. Suction and discharge valve functions are performed by ports in the cylinder block support plate which connects cylinders to the suction or discharge at the correct part of the stroke.

Radial piston pumps have multiple cylinders spaced radially around a central cam shaft. Most pumps are fixed stroke. Valves can be poppet, like engine valves, or ball; both spring loaded and automatic.

Inline pumps are similar in construction to inline car engines. Several cylinders are mounted above a cam shaft. Pumps tend to be of fixed capacity.

Pumps are available for pressures up to 670 bar for flows up to 8 l/s and operate at speeds up to 5000 rpm. Applications for these pumps are the hydraulic systems found in all parts of industry. The list below is not exhaustive:

- Agricultural machinery
- Coal mining
- Crude oil production
- Direct-acting process pumps
- Earth moving equipment
- Machine tools
- Power transmission
- Raw steel products
- Steelmaking

Pumps are now available with axial piston designs in ceramics for use on water and seawater. Low cost offshore developments are in seabed mounted wellheads with pipelines linking to centralised facilities. Wellhead hydraulic requirements serviced by seawater would have no leakage or liquid shortage problems. Optimising proportions and material combinations to reduce wear and extend operational life is a continuing priority. Current designs are limited to 160 bar.

1.5.13 Inline piston pumps

Piston pumps are similar to plunger pumps but have a moving seal on the piston. Piston pumps can be single acting or double acting. Double acting pumps have a stuffing box similar to a plunger pump stuffing box. The piston is driven by means of a rotating crank or eccentric, connecting rod and crosshead, see Figure 1.90. This Figure shows the use of Mission valves, the most popular type, and has an internal single reduction gear set built into the crankcase. (See Figure 1.96 for other valves for plunger pumps.)

Applications for piston pumps are wide ranging but duties on drilling rigs handling drill mud and crude oil production far exceed all others. Piston pumps are ideal for viscous liquids and handling solids which are not abrasive. Special pumps have been developed for pumping coal. Coal can be transported as a suspension in water or can be blended with oil to form a fuel for direct injection into boilers. Most applications are below 140 bar.

The comments regarding self-priming and cavitation in Section 1.5.15 may be helpful and apply equally to piston pumps. Piston pumps are manufactured mainly in cast iron, cast steel and abrasion resistant chrome iron.

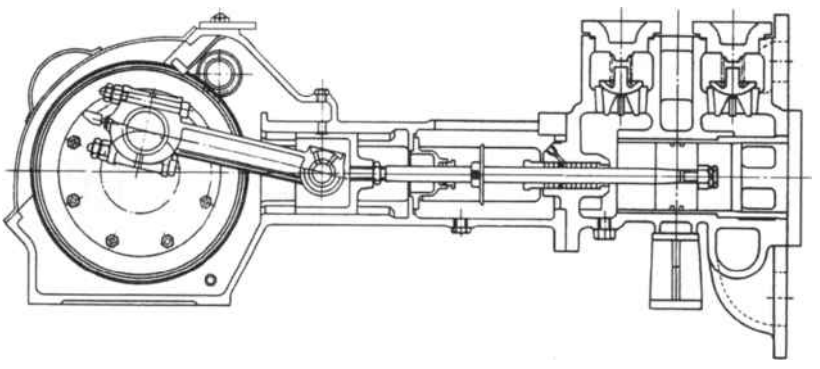

Figure 1.90 Crank drive piston pump

LIBERTY EXHIBIT 1014, Page 70

This book belongs to Robert Durham (rdurham@thewaylabs.com) Copyright Elsevier 2024

1.5.14 Descaling pumps

These include portable plunger pump packages for high pressure descaling/cleaning

High pressure water is used for descaling and cleaning. The high pressure produced by the plunger pump is converted to kinetic energy in a nozzle. The high velocity water jet impacts on any surface converting the kinetic energy to a destructive force. Pump packages are produced in several configurations:

- Electric motor driven
- Engine driven
- Skid-mounted
- Two or four wheel site trailer
- Two or four wheel road-going trailer with brakes and lights
- Vehicle-mounted

Packages may be complete with a water tank or have suction hoses for connection to a water supply. Facilities may be incorporated for hose reels and lance storage. Units may be capable of supplying more than one lance simultaneously.

These packages are produced to standard designs by pump manufacturers and by specialist firms who purchase all the components, including the pump. Horizontal and vertical pumps are used for these applications. If a standard package is not available to fulfil a particular requirement it is possible to buy a purpose-built unit.

The following equipment should be fitted, as a minimum, to all systems:

- Suction strainer with Dp indicator
- Pressure control valve for each operator
- Relief valve
- Low suction pressure cut-out and indicator
- Driver high temperature cut-out and indicator
- Pump high temperature cut-out and indicator

Pumps for high pressure descaling and cleaning usually run at 690 bar to 1050 bar, but manufacturers have offered pumps for 1900 bar. Portable electric motor driven packages are available from 7.5 kW. Skid-mounted engine units are available to over 1000 kW.

These packages are used for many applications:

- Concrete cleaning
- Drain cleaning
- Graffiti removal
- Heat exchanger tube cleaning
- Insulation removal
- Paint stripping
- Ship hull cleaning
- Vessel cleaning

1.5.15 Plunger pumps (includes horizontal and vertical)

Plunger pumps are available from single cylinder hand pumps, capable of pressures over 300 bar, to nine-cylinder vertical pumps absorbing over 3000 kW. Pumps are built with 1, 3, 4, 5, 6, 7 or 9 cylinders. Horizontal pumps have 1, 3, 5 or 7 cylinders. Vertical pumps have 3 or more cylinders. Increasing the number of cylinders increases the pump capacity if speed and stroke remain constant. Also increasing the number of cylinders tends to smooth the flow variations, reduces pressure pulsations and torque variations at the crankshaft. Pulsation

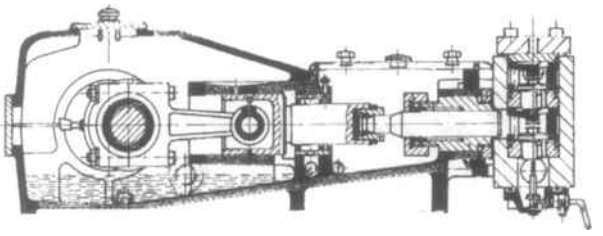

Figure 1.91 Horizontal plunger pump with monoblock liquid end and wing guided valves

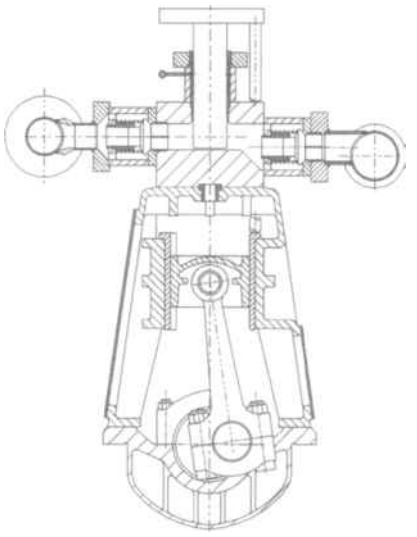

Figure 1.92 Vertical plunger pump

dampers can be fitted to both suction and discharge pipework to further attenuate pressure pulsations.

It must be stressed that flow variations and pressure pulsations are not just a function of the number of cylinders in the pump. Pump speed and the pipework system design have significant effects which cannot be ignored. Changes in pipework can eliminate the most serious problems. Acceleration head losses in the suction pipework are always considered when assessing NPIP available.

The horizontal pump shown in Figure 1.91 has suction valve unloaders fitted and would be driven through an external gear box or V-belt drive. Liquid ends can be built in different configurations for various applications. The monoblock liquid end shown is typical for standard pumps on non-corrosive applications. Other designs are available with separate manifolds and externally clamped valves.

Vertical pumps, Figure 1.92, are used for the most arduous applications. More space is available for special liquid end designs, bigger valves and longer stuffing boxes. The vertical pump shown is a modern pump design. The original vertical pump designs had the liquid end at ground level with the crankshaft above, see Figure 1.93.

Figure 1.94 shows a good horizontal pump installation. Notice the close proximity of the pulsation dampers to the pump connections; remote dampers are less effective. Also notice the suction pipework is larger than the pump connection.

Figure 1.95 shows a vertical plunger pump under construction. At the time it was believed to be the largest reciprocating pump operating in the North Sea offshore industry.

Plunger pumps can be fitted with a variety of valves to suit the application, see Figure 1.96.

- **Plate valves** General purpose valves for clean liquids with excellent dynamics, can have low NPIPr, suitable for speeds over 300 rpm. Mass produced by proprietary manu-

LIBERTY EXHIBIT 1014, Page 71

This book belongs to Robert Durham (rdurham@thewaylabs.com) Copyright Elsevier 2024

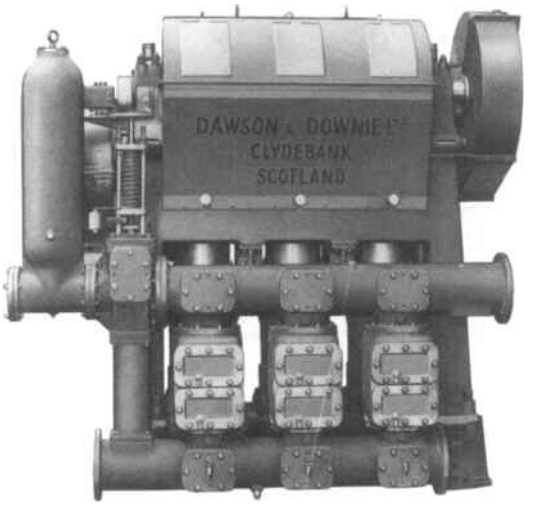

Figure 1.93 Low pressure vertical sewage plunger pump
Courtesy of Dawson Downie Lamont Ltd

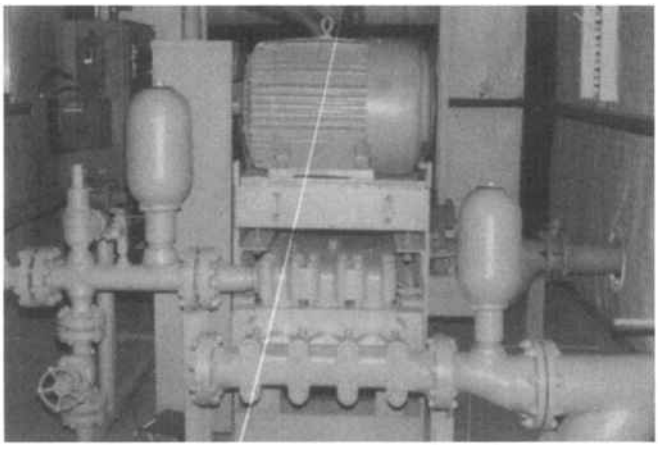

Figure 1.94 Horizontal pump installation

facturers as well as individual pump manufacturers. Generally limited to 400 barg. Standard horizontal pumps, with monoblock liquid ends usually have plate valves.

- **Plug valves** Heavy duty valves for clean liquids, medium NPIPr characteristics, usually operated below 350 rpm. Specially made by pump manufacturers for applications up to 550 barg.
- **Wing-guided valves** Can be designed as light or heavy duty, has good dynamics, low NPIPr and suitable for all speeds. Available as a proprietary design and also as specials by pump manufacturers. Suitable for pressures up to 550 barg, some designs can have an elastomeric seal for solids handling, 5% by volume approximately up to 500 mm.
- **Plug-guided ball valves** Suitable for clean liquids at the highest pressures. Dynamics are poor and should operate below 300 rpm.
- **Mission valves** Proprietary valves manufactured by TRW Mission specifically for oil well mud pumps. Poor dynamics, high NPIPr and should operate below 200 rpm. Can handle solids, up to 1 mm in the larger valves, at concentrations up to 65% by weight. Designed for low abrasion solid mixtures, less than Miller Number 50.
- **Ball valves for solids** Special valves made to order. Almost the ideal solids handling valve. Suitable for the most abrasive solids at concentrations of 65% by weight. Solids up to 6 mm in the larger valves. Dynamics can be poor, can be very low, largest valves suitable for speeds below 150 rpm. Long parts life, but requires lots of space and is costly. Also very good for high viscosity liquids.

The choice of material for the valve and the valve seat is critical. The valves are opened by a liquid differential pressure and held open by drag forces. Closure is spring-assisted. Allowances must be made in the valve design for shock loading due to rapid closure at higher speeds and pressure pulsation loading.

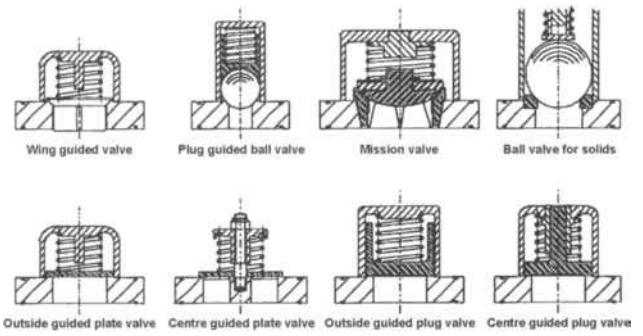

Figure 1.96 Valves for plunger pumps

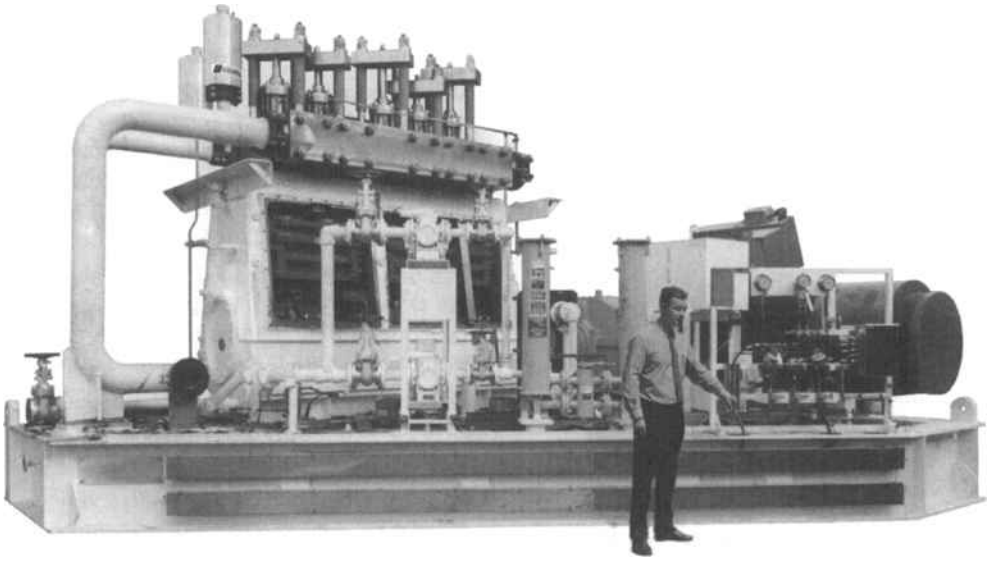

Figure 1.95 A vertical plunger pump under construction *Courtesy of Flowserve Corporation*

LIBERTY EXHIBIT 1014, Page 72

This book belongs to Robert Durham (rdurham@thewaylabs.com) Copyright Elsevier 2024

Sometimes valves can be actuated hydraulically for special applications.

Modern pumps are designed to operate at mean plunger speeds of 1.5 to 2 m/s. Pumps may operate a lower speeds to achieve better NPIPr or to suit operating conditions. The pressure developed by any plunger is related to the plunger load; the force applied by the crankshaft/connecting rod/crosshead to the plunger. Current designs include plunger loads over 400kN.

The liquid is prevented from escaping from the liquid end by the stuffing box. Various seal designs, from simple to complex, can be fitted to suit the liquid and the environment. Pumps handling abrasive solids in suspension can have the front of the stuffing box flushed with clean liquid to protect the packing. Pumps with very low suction pressures can have a quench across the back of the packing to prevent air being induced. A quench can also be used to prevent hot liquid vapourising. Liquid can be circulated between seals to cool, lubricate and/or remove vapours. Single shot lubrication, where the lube oil mixes with the product and is lost, is the most popular stuffing box system.

Pumps are selected by adjusting all the variables; speed, stroke, plunger diameter; to suit the application. Knowledge of the liquid compressibility is essential for proper selection when the differential pressure exceeds 40 bar.

The plunger diameter is calculated from the plunger load. This diameter is rounded down to a standard seal diameter. The volumetric efficiency is calculated based on the pump proportions, the differential pressure and the liquid compressibility. The flow per revolution is then calculated based on the plunger diameter, stroke, volumetric efficiency and number of plungers. The pump speed can then be calculated for the rated flow. If the pump speed is too fast, more cylinders can be considered or a larger pump used with a higher plunger load and consequently larger plunger diameter. For pumps to run at full speed adequate NPIP must be available.

Plunger pumps can operate with high suction pressure; over 135 bar in some applications. High suction pressure is defined as a suction pressure which produces a plunger load higher than a prescribed limit. Some pump designs use 5% as the benchmark, others 20%. High suction pressure must be considered in the selection process because it affects volumetric and mechanical efficiency. Mechanical efficiency is reduce because of increased friction losses during the suction sroke.

Plunger pumps should not be used in self-priming applications unless the manufacturer has fully approved the operating conditions. Pumping air or vapour corresponds to 100% cavitation and will do no damage. The damage will occur during the transition from 100% cavitation to zero cavitation. Very high internal pressures may be created, far higher than the normal discharge pressure. This will lead to increased wear and component failure due to fatigue.

The most common failures are:

- High bearing wear and failure of bearing shells or ball/rollers
- Crankshaft failure
- Crosshead failure
- Very short packing life
- Liquid end stud/bolt fracture
- Suction valve failure, rapid seat wear
- Cylinder cracking

Plunger pumps are capable of working at the highest pressures, with the most difficult liquids and with abrasive solids if necessary. Pressures to 500 bar are common in process applications. Discharge pressures of 1000 bar are common in descaling and high pressure water jetting. Pumps for 3500 bar are available to order. Flows up to 500 m^3/h are possible at pressures up to 100 bar.

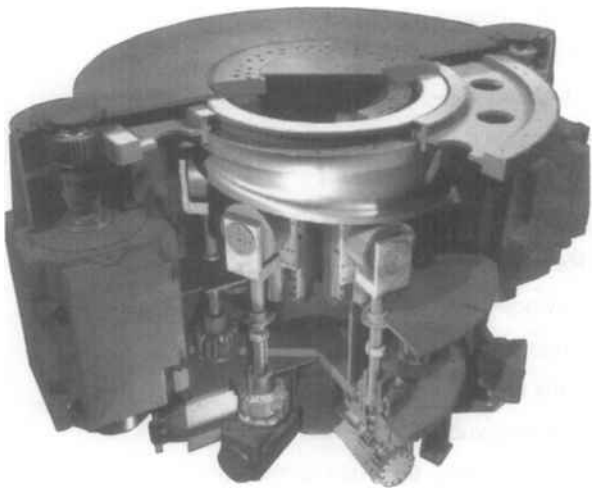

Figure 1.97 A cam-operated vertical plunger pump
Courtesy of National Oilwell Varco

In addition, plunger pumps are used for low pressure, difficult applications where good suction capabilities are required and low speed is essential to reduce wear. Tank bottom residues, sediment, industrial and municipal wastes and sewage are typical mixtures handled by the original vertical pump design, shown in Figure 1.92.

The crankcase assemblies are standard using mostly cast iron. Liquid ends, stuffing boxes and valves can be made in almost any material. Standard materials include cast iron, bronze, steel, stainless steel, duplex stainless steel. High pressure pumps require materials with high fatigue endurance stress levels, such as 1% CrMo, 15-5PH and 22Cr 13Ni 5Mo.

Figure 1.97 shows one of the latest developments in plunger pump technology. Most plunger pumps are 'slider-crank', this is cam-operated. Even more unusually is that this is an axial pump. The pump shown is effectively a much larger version of the axial piston pumps used for hydraulic fluid power. The cutaway view in the Figure shows the construction. The pump is a 'vertical plunger' almost in the style of the original crankshaft pumps. Cam-driven pumps have been tried many times; not always with much success.

Currently this is the largest cam pump in production. Having six cylinders is very unusual and defies the simple (useless) theory used by most engineers. The stuffing boxes and valve assemblies are built as 'cartridges' for easy maintenance. The two drive motors, are integrated in the pump and drive through a single reduction gear. The pump is capable of about 1800 hydraulic kilowatts. Of course, there are flow and pressure limitations, but a useful pump for clean liquid applications.

Plunger pumps applications are diverse. The following list highlights some of the important areas:

- Boiler feed pumps
- Carbon dioxide injection for crude oil recover
- Chemical processing
- Crude oil/water emulsion recovery
- Domestic high pressure cleaners
- Ethylene glycol injection at wellheads
- Garage car washes
- Gas drying
- Gas sweetening

This book belongs to Robert Durham (rdurham@thewaylabs.com) Copyright Elsevier 2024

- High pressure water jetting
- Industrial waste
- LNG re-injection
- Methanol injection at wellheads
- Municipal waste
- Oil/water emulsion hydraulics
- Reverse osmosis
- Sewage
- Soap powder manufacture
- Tank residue disposal
- Viscous crude oil pipelines
- Water injection for crude oil recovery

1.5.16 Syringe pumps

Syringe pumps are different to most of the other pump types considered. Syringe pumps cannot operate continuously, only intermittently. Syringe pumps can only be used for batch processes. One of the biggest problems encountered with pump applications is ensuring an adequate supply of liquid to the pump. This problem increases as the liquid handled becomes more viscous. Syringe pumps overcome this problem by removing it from the normal pump operation completely; syringes must be filled before the pumping operation commences. As filling is divorced from discharging filling can take as long as necessary.

Syringe pumps consist of one to ten syringes and a mechanical/electric drive unit, see Figure 1.98. Normal glass and plastic medical syringes can be used, up to 21 bar, and stainless steel syringes can be used for high pressure applications, 100 bar.

1.5.17 Diaphragm pumps (includes mechanical and hydraulic actuation)

Plunger pumps and piston pumps have stuffing boxes which are potential areas of leakage. Seals, such as mechanical seals, are not yet available for reciprocating pumps. The problem of normal leakage can be completely eliminated by using a diaphragm pump, see Figure 1.99. Reciprocating motion is produced in the conventional manner (the Figure shows an eccentric shaft rather than a crankshaft). The motion from the crosshead is transmitted directly to a diaphragm.

The pump shown has ball valves. Liquid would enter through the bottom valve and be forced out of the top valve; the liquid end would be self-venting. Pumps of this horizontal style are

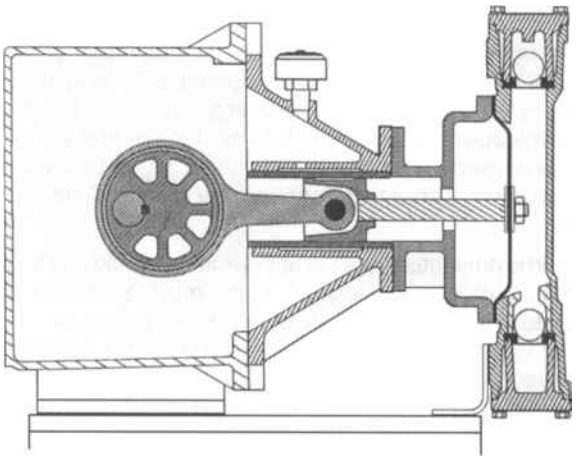

Figure 1.99 Mechanical diaphragm pump

built with one, two or three cylinders although there is no practical limit on the number of possible cylinders. Horizontal pumps are also built with a Scotch Yoke mechanism to produce the reciprocating motion. No crosshead is required if two cylinders are mounted back to back, the diaphragm motion rods can support the yoke. Scotch Yoke mechanisms tend to have more friction than crankshafts or eccentric shafts. Mechanical diaphragm pumps are also constructed as vertical pumps; these are nearly always single cylinder pumps but twin cylinder pumps are built. Single cylinder vertical style pumps are also called Single Disc pumps. Most versions of the vertical pump do not have a crosshead; the connecting rod is coupled directly to the diaphragm. This style of construction imposes extra loads on the diaphragm.

Some versions of the vertical pump have a spring-loaded coupling incorporated in the connecting rod, see Figure 1.100 which shows a portable engine driven pump. The spring loading allows the diaphragm to short stroke if large solids restrict the diaphragm motion. The vertical style is popular as a site pump and can be engine driven. Pumps can be fitted with flap, ball or duck-billed valves as appropriate for the operating conditions.

The mechanical diaphragm pump is usually a low pressure pump, discharge pressures up to 6 bar are possible. Site pumps may be only capable of 1.5 bar. As a low pressure reciprocating pump it has some useful advantages over both piston and plunger pumps. Pumps are dry self-priming and when the

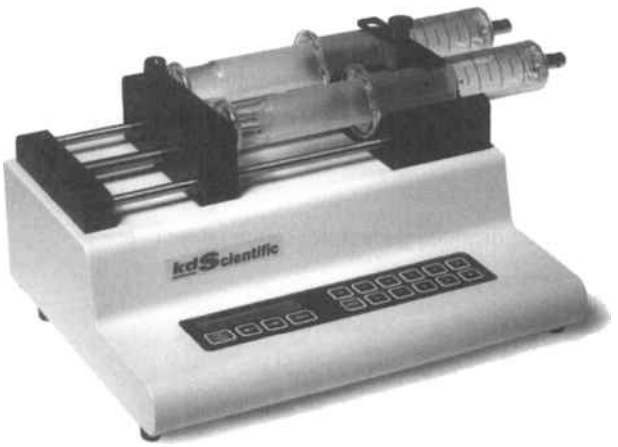

Figure 1.98 Syringe pump system
Courtesy of K D Scientific Inc

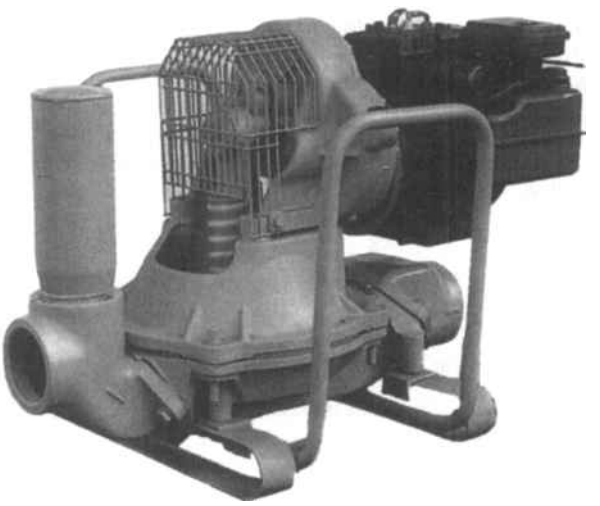

Figure 1.100 Portable engine driven pump
Courtesy of Gilbert Gilkes & Gordon Ltd

LIBERTY EXHIBIT 1014, Page 74

This book belongs to Robert Durham (rdurham@thewaylabs.com) Copyright Elsevier 2024

valves are maintained in good condition suction lift capabilities of 6 m are achievable. Continuous dry running is acceptable.

The mechanical diaphragm pump can snore. (Snoring describes a pumps ability to run dry when the liquid supply disappears and then to self-prime and pump when the liquid supply returns.) Depending upon the type of valves fitted the pump can handle large solids and high viscosity liquids.

Mechanical diaphragm pumps can be constructed from a variety of materials, to suit many applications, see Table 1.3. Metal diaphragms can be used for high temperature applications.

Liquid ends	Diaphragms	Valves
Aluminium	Buna 'N'	Buna 'N'
Cast iron	Neoprene	Neoprene
SG iron	Viton	Polyurethane
Bronze	EPDM	PTFE
Stainless steel	PTFE	Borosilicate glass
Polypropylene		
PVDF		
PTFE		

Table 1.3 Popular mechanical diaphragm pump materials

Mechanical diaphragm pumps can handle flows up to about 80 m^3/h.

Flow variations and associated pressure pulsations may be a problem with single and twin cylinder pumps. Some pumps can be supplied with integral discharge air chambers. The manufacturers advice should be sort if cyclic flow variations could create operating problems. A section through a diaphragm pump with a pneumatic unloader valve option is shown in Figure 1.101.

A special derivative of the mechanical diaphragm pump has been developed specifically for viscous liquids and stringy solids handling. The Double Disc pump utilises two rubber diaphragms which act as pumping element and valves. The first diaphragm opens and allows product into the pump. On closing the diaphragm forces the product into the second chamber where the diaphragm is open. When the second diaphragm closes the product is pumped into the discharge system. These pumps are only capable of generating 3 barg but have found favour in the sewage and waste water treatment industries. Flow rates up to 25m^3/h are possible.

1.5.18 Air-operated double-diaphragm pumps

Air-driven diaphragm pumps are a style of direct-acting pump which utilise compressed air to deflect the diaphragm. This type of actuation imposes much lower stresses on the diaphragm

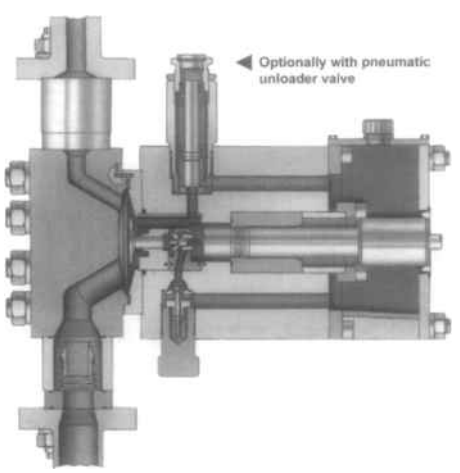

Figure 1.101 Diaphragm pump
Courtesy of Uraca Pumpenfabrik GmbH & Co KG

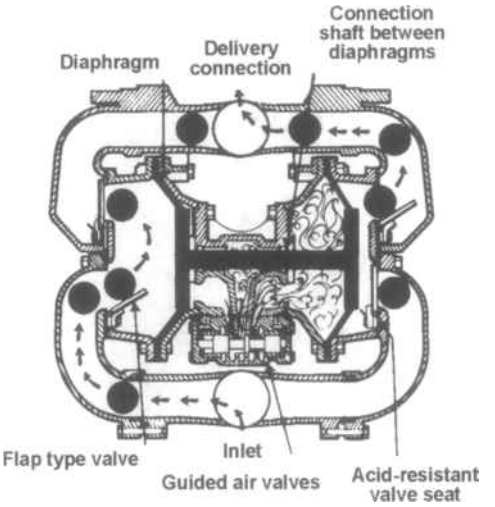

Figure 1.102 Compressed air-driven diaphragm pump

because of the high degree of pressure balancing. The basic pump construction is very similar to the pumps in Section 1.5.17, suction valves at the bottom and discharge at the top, but two diaphragms are mounted back-to-back, see Figure 1.102.

Compressed air is applied to the inside face of the diaphragms, alternatively, to create the stroke cycling. Three styles of valves are popular; flap, plate or cone, or ball. The choice of valve is dictated by the type of product to be handled and the size of solids. Flap valves can handle the largest solids.

Diaphragm pumps are leak-free since there are no plungers or piston rods which pass through the process pressure boundary. Leakage can occur however if the diaphragm fails. It is therefore necessary to replace the diaphragms regularly, as part of a preventative maintenance programme. Some models are available with a double-diaphragm incorporating a rupture detection system. The material used for the diaphragm is usually an elastomer such as nitrile rubber, Neoprene or fluorocarbon. Pumps suitable for hygienic applications are available. Figure 1.103 shows a non-metallic pump. This particular design is manufactured in polypropylene, Acetal or PVDF and suitable for pressures up to 8.3 barg.

The air-driven diaphragm pump is not a fixed speed pump like an electric motor driven pump. Because the power supply is compressed air the pump is not fixed to an electricity supply frequency. Diaphragm pump speed is controlled by the differential pressure between the compressed air and the liquid. Increasing the air pressure increases pump speed. Also, reducing the liquid pressure increases the pump speed. Compressed air flow control, as well as pressure control, may be required. Using compressed air in place of electricity means the pump is inherently safe and can be installed in any hazardous area. Also the pump can be submerged without creating a hazard.

Air-driven diaphragm pumps have good self-priming and suction lift capabilities. Suction lift can be up to 8m depending upon the pump size, speed and type and condition of the valves. Flap valves can allow the passage of solids which are 90% of the suction connection size. Industrial pumps are manufactured in a wide range of metallic and non-metallic materials; aluminium, cast iron, stainless steel, polypropylene, PVC, PVDF, PTFE. Industrial pumps can handle 60 m^3/h at pressures up to 7 barg when powered by factory air at 8.3 barg. Hygienic quality pumps can handle flows up to 28 m^3/h. Air-driven diaphragm pumps always produce a pulsating flow because the pump design is twin cylinder. Problems caused by pulsating flow can be alleviated by fitting suction and discharge pulsation dampers.

LIBERTY EXHIBIT 1014, Page 75

This book belongs to Robert Durham (rdurham@thewaylabs.com)
Copyright Elsevier 2024

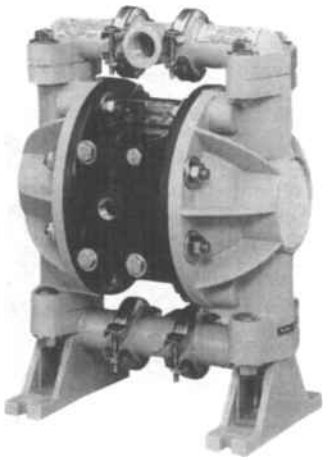

Figure 1.103 A non-metallic air-operated double-diaphragm pump

1.5.19 Metering pumps (flow within ± 0.1% to ± 3% with substantial dp changes)

Metering pumps are also called dosing pumps and proportioning pumps. Metering pumps are used to add small quantities of liquid to other liquid streams or vessels. Table 1.4 shows examples of processes which use metering pumps.

Pressure bar	Flow L/h	Temp °C	Liquid	Process	Problem
5	300	room	hydrochloric acid	water preparation	corrosion
5	1	room	mercury	chemical	high density
5	500	500	lead	metallurgical	high temperature
10	10	120	sodium	chemical	explosive
10	100	room	plutonium salt	nuclear fuel recovery	radioactive
10	20000	room	sugar solution	soft drink manufacture	hygienic
100	200	room	tungsten carbide suspensions	spray drying	abrasion
200	1500	-30	chlorine	chlorination	toxic
300	500	-200	oxygen	chemical	low temperature explosion cleanliness
500	1000	room	vinyl acetate		toxic high pressure
3000	30	room	catalyst	polythene manufacture	high pressure

Table 1.4 Processes in which metering pumps are used

Other typical applications include the injection of biocide into water and seawater pipelines to prevent the growth of organisms. Injection of methanol or ethylene glycol into wellheads to prevent the formation of hydrates. The injection of chemicals into seawater prior to reverse osmosis treatment.

The basic requirements of a metering pump are to deliver measured volumes of liquids accurately without significant changes in volume as discharge pressure varies. Typical accuracies would be ±0.25% to ± 3% of the rated flow. Positive displacement pumps are ideally qualified and specific variants of reciprocating pumps have evolved to fulfil the functions. Metering pumps are usually small plunger pumps, diaphragm pumps or peristaltic pumps for low pressure applications.

Plunger pumps used as metering pumps are modified versions of the pumps described in Section 1.5.15. The main modification involves providing a variable stroke mechanism so that the flow can be adjusted while the pump runs at constant speed. In theory, pumps can operate from zero to maximum flow. In practice, accuracy can only be maintained from 10% to 100% flow. Figure 1.104 shows a plunger pump type metering pump fitted with ball valves on suction and discharge.

Raising or lowering the Z-shaped crankshaft changes the length of the stroke. Metering pumps are single cylinder pumps. However, pumps can be ganged together on one drive shaft to form multiple units. This type of construction is useful when more than one liquid is metered and when several metering rates must be adjusted, in the same proportions, simultaneously. Stroke lengths and plunger diameters of each cylinder can be different. The stroke of each cylinder is adjusted individually to deliver the correct volume; the speed of all cylinders is varied simultaneously for collective flow adjustment.

Diaphragm metering pumps are of two different designs. Small pumps can have the diaphragm driven directly by an electric solenoid. Stroke length is adjusted mechanically and stroke speed electrically. Larger diaphragm metering pumps have the diaphragm actuated hydraulically, the hydraulic power being provided by a plunger pump. Figure 1.105 illustrates the modifications necessary to add a diaphragm.

The movement of the diaphragm is limited by supporting walls with slots on each side of the diaphragm or by profiled cylinder walls. Hydraulically actuated diaphragm pumps can become complicated. Provision must be made to maintain the oil volume behind the diaphragm. Leakage through the stuffing box must be replenished to preserve accuracy. Also overpressure of the hydraulic oil may present problems.

Ball valves are the most popular choice of suction and discharge valve for metering pumps. Ball valves have the longest possible life while preserving good sealing capabilities. Metering pumps always run slowly and ball dynamics are not a problem. Some designs incorporate soft seals within the valve seat to improve accuracy. Pumps are often fitted with double spring-loaded ball valves in both the suction and discharge in order to reduce the risk of backflow through the valve after each respective suction and delivery stroke.

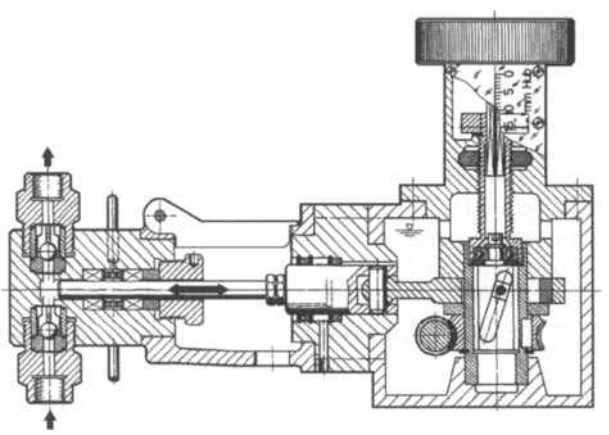

Figure 1.104 Plunger type metering pump

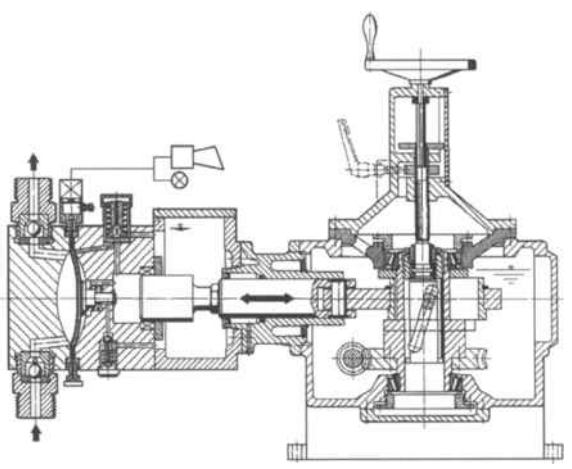

Figure 1.105 Hydraulic diaphragm type metering pump

LIBERTY EXHIBIT 1014, Page 76

This book belongs to Robert Durham (rdurham@thewaylabs.com) Copyright Elsevier 2024

Plunger style pumps are used for all pressure ranges when the liquid is not toxic and there is no risk of corrosion of the pump external components. Diaphragm pumps are used when any leakage from the pump is unacceptable. Because metering pumps run slowly there are no real problems with viscous liquids. The ability to handle solids in suspension is dependent upon the pump size and should be confirmed with the manufacturer.

Metering pumps can cause pressure pulsations. Pulsation dampers may be required on the suction to preserve the NPIPa. Dampers may be required on the discharge to eliminate pipework vibration and smooth out the dosing rate.

Metering pumps are available in a wide range of materials including complete construction in PTFE. Flow rates can be as low as 0.1 l/h and over 10 m^3/h per head.

1.5.20 Direct-acting reciprocating pumps (includes pneumatic, hydraulic and steam actuation)

Direct-acting, d-a pumps are one of the oldest styles of positive displacement pumps. Direct-acting pumps are fluid powered reciprocating pumps which have no rotary mechanisms; a reciprocating motor provides the power to drive a reciprocating pump. The air-driven diaphragm pump, in Section 1.5.18, is technically a direct-acting pump but all the pumps within Section 1.5.20 have piston motors. Pumps within this category can be divided into three subgroups which are listed in order of popularity:

- Air-driven pumps
- Hydraulically-driven pumps
- Steam-driven pumps

The steam-driven pump is the oldest style of d-a pump and became popular as a boiler feed pump around 1841 when Henry Rossiter Worthington of New York patented the direct-acting simplex steam piston pump. The duplex pump followed in 1859. The motion of d-a pumps differs from slider-crank pumps because it does not tend to be sinusoidal. The motion of d-a pumps tends to be trapezoidal. The acceleration and deceleration of the pumping element(s) can be controlled independently of the (fairly) constant velocity which is maintained for most of the stroke. The effects of acceleration and deceleration can be alleviated by multiplexing or by pulsation dampers.

The air-driven pump is currently the most popular style of d-a pump because of its primary area of application which is pressure testing components and assemblies. All the d-a pumps have the ability to stall and maintain discharge pressure. This means the pumps can produce zero flow but maintain a predetermined pressure. A double-acting air cylinder drives one or two single-acting plunger pumps.

Figure 1.106 shows an air-driven pump with two plunger pumps, one at either end of the double-acting air cylinder and has the air filter/regulator fitted. This is an old-fashioned design; about 35 years old; but is very useful to show the basic construction of the pump. Modern pumps are unitised; it can be difficult to distinguish the air and liquid ends. When air is applied to one side of the piston the liquid plunger is withdrawn from the cylinder; suction stroke. At the end of the stroke the air valve diverts the air supply to the other side of the piston and exhausts the pressurised side. The piston moves in the other direction and the liquid plunger forces liquid into the discharge system. The pump continues to operate until the air and liquid forces are balanced. The air-hydro produces a discharge pressure which is a function of the air supply pressure and the pump ratio. The pump ratio is the ratio of the air piston area to the liquid piston/plunger area. Most pumps are designed to work with factory air at 7 barg. Air-hydros can produce pressures from 2.7 to 6900 barg.

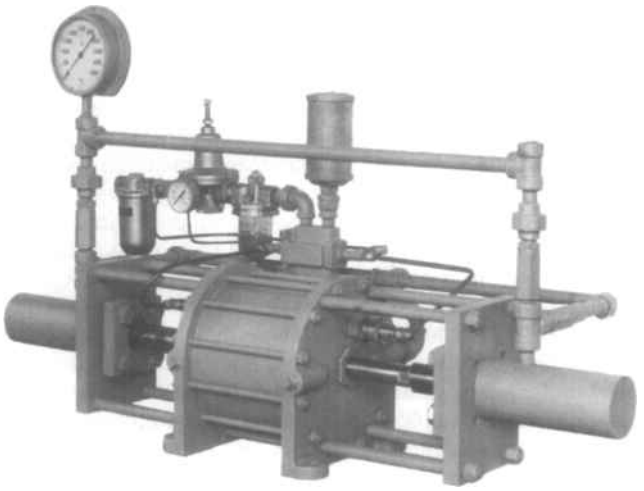

Figure 1.106 Typical high pressure air-driven pump

Some modern designs incorporate a two-stage effect. The pump can operate with either a large or small diameter plunger. Under low liquid pressure conditions the large diameter plunger is used for fast filling. At a predetermined pressure the large diameter plunger stalls and the small diameter plunger continues pressurisation. The d-a air-driven pump is capable of water flows of 100 l/min at low pressure and 0.35l/min at 2000 barg. There are many pump sizes available and flow is infinitely adjustable from zero to maximum. The high pressure d-a air-driven pump can be used for other applications such as clamping or water cutting. Special versions are available to work with refrigerants.

NOTE: Investigate the availability of high pressure pipework and fittings before spending a lot of time designing a system for over 420 barg. Pulsation dampers, or the size of pulsation dampers, may be an additional problem.

Air-driven pumps are also popular for barrel and container emptying applications. It is possible to construct a long, slender piston pump with a cylinder outer diameter small enough to pass through the standard connection on drums and intermediate bulk containers (IBCs). Pumps are manufactured in standard diameters and lengths as shown in Table 1.5.

Pump diameter mm	Standard lengths mm	Flow range l/min
27	490	1
34	210, 460, 1000, 1090	2, 7.5
42	230, 1020	4, 6.7
51	225, 1170	6, 10.5
55	278, 335, 1000, 1015	7.4, 12.5
76	330, 1110	14, 24
84	327, 1100	14, 24
96	396, 1130	20, 33
120	465, 900	31, 52

Table 1.5 Standard sizes of container emptying pumps

Pumps normally have ball valves so viscous liquids can be handled, up to 10000 Poise. Spring-loaded chevron packing is an option to reduce routine maintenance. Pistons have PTFE rings. Most pump parts are 304 or 316 stainless steel. Pumps have ratios between 1 and 33 to allow pressures up to 150 barg to be developed. Pressure pulsations may be a problem when pumps operate at high speed and high pressure. Some pump manufacturers produce their own pulsation dampers.

Hydraulically-driven pumps are used for two vastly different types of application; high viscosity/large solid mixtures and high pressure liquids. Hydraulically-driven reciprocating pumps are

This book belongs to Robert Durham (rdurham@thewaylabs.com) Copyright Elsevier 2024

ideal for very arduous applications because the pumps can operate at very low speed to reduce wear and pressure pulsation problems.

One of the most popular applications for hydraulically-driven pumps is handling cement on building sites. For viscous liquids with small solids a standard double-acting horizontal piston liquid end can be used driven by a double-acting hydraulic cylinder. Hydraulic power is provided by a power pack. An axial piston swashplate pump is normally used to provide a variable hydraulic flow from a constant speed pump. Control is via a small programmable logic controller (PLC). Process liquid valves can be flexible elastomer for low pressure pumps, plate, tapered plug or ball. Cylinder liners and piston rods are normally protected by a substantial layer of chrome plate. Other coatings can be applied for improved wear/abrasion resistance. A single-acting piston liquid end can be used for extremely viscous liquids. A plunger pump liquid end, with actuated valves, can be used for the most abrasive products or very large solids. This style of horizontal pump is very versatile because the stroke length is easily adjustable to produce larger or smaller pumps.

Hydraulically-driven pumps are produced in low pressure, 2barg, and higher pressures, up to 160 barg, versions. There are no practical limits for the design pressures of special pumps. Standard pumps can maintain flows of 480 m^3/h. NPIPr can be as low as 0.1 bar. In applications where the process medium does not flow easily a screw conveyor can be attached to the pump suction to provide a positive supply. Special provision can be made for self-priming and dry running. A vertical plunger pump version is very popular in the sewage treatment industry; these pumps are built as simplexes and duplexes. Standard pumps can handle 216 m^3/h at pressures up to 20 barg.

A special version of the hydraulically-driven pump uses the process liquid as the motive power to produce a higher pressure. This type of pump is usually called an intensifier. Intensifiers are used to produce the highest possible pressures, 10300 barg. Intensifiers are used in water cutting applications and in oil well servicing applications.

Many pump users think the steam pump is obsolete and has been replaced by modern technology; this is not completely correct. New steam pumps are still installed in refineries and on board ships. Steam pumps are very good with high viscosity liquids and for tank emptying duties. Steam pumps, like other d-a pumps, can operate extremely slowly and can have very low NPIPr. Also, at low speed the d-a pump can handle liquid/gas or liquid/vapour mixtures if the differential pressure is low. Steam pumps are ideal for tank stripping. Large tanks would be emptied quickly by a centrifugal pump. As the tank level reduced the NPSHa for the pump would reduce. At some point the centrifugal pump would cavitate and have to stop. A steam pump is then used to strip the dregs out of the tank. Steam pumps are usually double-acting piston pumps and are built as simplexes or duplexes; horizontal and vertical styles are available. Horizontal pumps are preferred for land installations and some marine users prefer vertical pumps.

Figure 1.107 shows horizontal duplex piston pump with discharge pulsation damper. The suction connection, at the bottom, and the valve access covers are easily seen. Pumps are capable of flows up to 545 m^3/h and rated pressures are from 10 to 55 barg. Steam conditions do not normally exceed 17barg and 380 °C. Figure 1.108 shows a special quadruplex plunger steam pump for a high pressure application. Pumps of this style are capable of 500 barg.

1.5.21 Non-metallic positive displacement pumps

Positive displacement pumps are often described as 'low-flow, high-pressure' pumps; this description completely ignores the pumps which are designed for 2.5 barg discharge pressure. In

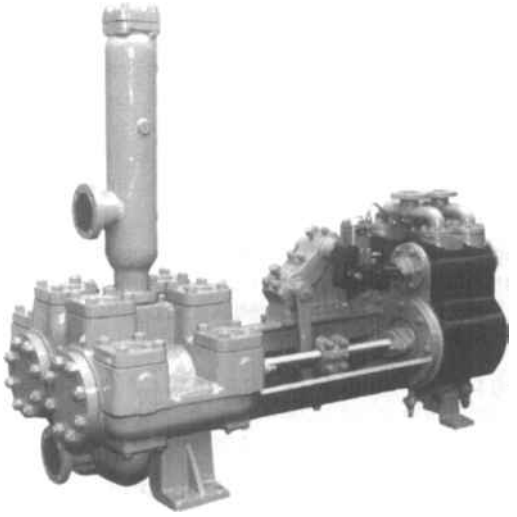

Figure 1.107 A typical horizontal duplex steam pump
Courtesy of Dawson Downie Lamont Ltd

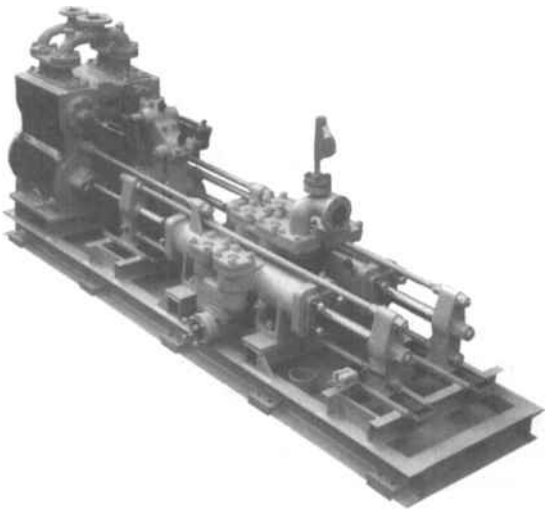

Figure 1.108 A special horizontal quadruplex plunger steam pump
Courtesy of Dawson Downie Lamont Ltd

simplistic terms, high-pressure pumps cannot be non-metallic because non-metallic materials are not strong enough to support the stresses generated. However, non-metallic materials do possess exceptional corrosion resistance. Providing the strength limitations are strictly observed, low strength materials can make very useful pumps. The low strength of materials can be partially compensated by external reinforcing. This technique is used on centrifugal pumps, see Figures 1.52 and 7.9 in Chapter 7. External reinforcing substantially increases the allowable forces and moments which can be applied by piping. Metallic pumps can have wetted surfaces coated with non-metallic material. These pumps should be considered as a special case of metallic pumps.

The most popular non-metallic positive displacement pump is the air-operated double-diaphragm pump; this is one of the best selling pump types of all categories!! Typical casing materials include Acetal, nylon, polypropylene (PP), polyvinylidene (PVDF) and polytetrafluoroethylene (PTFE). Diaphragms are slightly more complicated. Because of the flexure, fatigue due to stressing becomes a problem. Popular materials are chloroprene, neoprene, nitrile rubber, polyurethane, ethylene propylene diene (EPDM), Santoprene® and fluorocarbon alloys. The diaphragm can be reinforced with fibres, such as nylon mesh, to increase strength. Diaphragms can be coated, or moulded in layers, so that a good flexible material could have its corrosion resistance improved. Neoprene can be coated with a Viton ®/PTFE alloy or nitrile rubber faced with PTFE.

LIBERTY EXHIBIT 1014, Page 78

This book belongs to Robert Durham (rdurham@thewaylabs.com) Copyright Elsevier 2024

Direct-acting pumps, driven by compressed air, are fairly easy to manufacture without metal components. Pressure ratings would be much reduced compared to their metallic relatives.

Some rotary pd pumps are easy to manufacture from 'plastics' which can be extruded. Pd pumps don't necessarily require complicated castings. Figure 1.63 shows an external gear pump with a casing machined from a solid block; this manufacturing route can be applied to plastic bar of the appropriate size. Other pump types which are amenable to this treatment include; internal gear pumps, triple-rotor and 5-rotor screw pumps, lobe pumps, circumferential piston pumps, vane pumps, piston pumps, plunger pumps, syringe pumps and metering pumps. The peristaltic pump is always a non-metallic pump. The only component in contact with the liquid is an elastomer tube. The pump structure is usually metallic, but not normally 'in-contact'.

When considering a non-metallic pump for a specific application, it is important think about the piping at the same time. Flexible pipes, hoses, do not transmit significant forces and moments to the pump connections. But, flexible pipes do try to straighten out when pressurised. Also they can 'kick' a lot when the liquid flow pulsates. Non-metallic pulsation dampers are available to alleviate these problems.

1.5.22 Sealless positive displacement pumps

The term 'sealless' is being used irrationally by some pump manufacturers. The original intent of 'sealless' was to describe a pump which did not have a dynamic leak path requiring a dynamic seal of some description. Sealless meant a static seal; a stationary boundary. Most pump developments are driven by centrifugal pump requirements and new ideas are tried on them first. There are two solutions to the 'sealless' problem, canned drive motors and magnetic drives. Canned motors cannot be used on all applications because the process liquid may damage the motor. Magnetic drives can be used on a wide range of applications.

Manufacturers of peristaltic pumps are claiming them to be 'sealless'. This claim is true to the extent that the pump does not have a rotating shaft seal or a reciprocating rod seal. But! the pump does have a dynamic seal, the hose! The hose may fail due to wear or fatigue. Static seals don't usually wear and do not suffer from fatigue problems. The peristaltic pump is a very useful pump but it isn't sealless! (One manufacturer claims his peristaltic pumps are contactless! Be very wary of pump manufacturers' literature!)

Reciprocating pumps cannot be sealless. A diaphragm pump can be sealless to the same extent as the peristaltic pump; the seal is dynamic.

Rotary positive displacement pumps can be sealless in the same ways as rotodynamic pumps. Canned motor pumps are very rare. Small sliding vane pumps powered by 12 V DC are used as petrol pumps on some vehicles; this is the only canned motor pd pump seen to date. Some rotary pd pumps are available as magnetic drive versions: internal gear pumps (see Figure 1.109), external gear pumps, triple screw pumps and progressive cavity pumps. Pump materials are not affected. Just one last thought ..... the jet pump is sealless. Of course it is a mixer as well. So why not multi-task and save time and money? It can be a heater as well ..... if you use steam !

Figure 1.109 A magnetic drive internal gear pump

Figure 1.109 raises a very interesting question. Why would an exotic shaft seal be necessary if threaded process connections were adequate?

1.5.23 Hydraulic motors

Most positive displacement pumps can run in reverse and act as a motor. Reciprocating pumps with valves; diaphragm, piston, plunger; can't run backwards unless there is a major leakage problem with the valves. Both suction and discharge valves must be worn to allow this to happen. The pump may not rotate; this depends upon the speed ratio to the driver. Reciprocating pumps don't usually require a non-return valve in the discharge piping because the internal valves prevent reverse flow. Rotary pumps can usually run in both directions; not necessarily with the same effectiveness. Whether a pump can operate as a hydraulic motor, intentionally or unintentionally, is dependant upon the speed ratio to the driver and the nature of the power transmission and driver. Many rotary positive displacement pumps are installed without non-return valves and the possibility of 'turbining' exists. The level of static pressure in the discharge system is a critical factor.

Hydraulic motors are used extensively in hydraulic fluid power applications. The most popular styles are vane, gear and piston. This book is concerned with the process applications of pumps and hydraulic fluid power is mentioned only in passing. Process applications for hydraulic motors are relatively limited but this is likely to change as the move towards greater operating efficiency, to reduce energy consumption and energy costs, concentrates attention on process detail design. Hydraulic motors are used in applications where the inclusion produces obvious operational advantages.

One area of pump use has adopted hydraulic motors to improve operations, well drilling, most notably oil well drilling. Drilling rigs, for oil wells, use 'mud' to lubricate the drill bit and to remove cuttings/debris from the hole bottom. The mud is pressurised by pumps on the rig. The potential energy of the mud can be used to drive a motor. Progressing cavity pumps have been adapted to provide rotary power for the drill bit and other tools, reamers, rereamers and underreamers. These motors are usually called 'mud motors'.

Mud motors driving drill bits are used for three basic reasons: speed, reach and accuracy. Typically, a mud motor drill head will penetrate up to four times faster than a drill-string assembly. Tests have been conducted with high pressure mud, 690 barg, so that the rotary drill action can be augmented by high pressure jets. Tests showed a speed increase up to eight times for drilling sandstone and limestone. Tests were very short-term due wear problems experienced by the high pressure nozzles. Remember, drilling mud is abrasive; it's not like clean water. Faster drilling speeds reduce production costs and allow a rig to drill more wells. Mud motors have been used to drill much longer angled and horizontal wells. This allows more reservoir to be coupled to a central base; cheaper installation. Mud motor assemblies have been controlled to within ±1.5 metres; this might have been at the end of a 8000 metre well. Instrument packages can analyse the mud, close to the drill bit, and confirm the pressures and formation composition.

Mud motors must be designed to fit inside standard well casing bores. Typical sizes range from 1 7/16" (36.5 mm) to 11¼" (286 mm). Motor assemblies range from about 2.2 m long to 7 m. Stator designs follow the pump pattern, normal variable thickness elastomer and constant thickness elastomer. Power

This book belongs to Robert Durham (rdurham@thewaylabs.com) Copyright Elsevier 2024

transmission from the rotor is accomplished by flexi-shaft, sometimes in titanium, or a shaft with two sealed flexible coupling. Bearings, radial and thrust, are sealed and lubricated. Tests have been conducted with diamond-faced thrust bearings to cope with higher loads and produce smaller bearings. Typically, motors run with a 15 to 35 bar differential pressure and rotate, when loaded, between 50 and 150 rpm. A small motor will require about 10 m^3/h.

1.6 Other pump types

1.6.1 Ejectors

Jet pumps or injectors operate by converting the potential energy of a motive fluid to kinetic energy of the driving jet thus reducing the static pressure and moving the pumped liquid directly without the assistance of moving mechanical components. The motive medium can be gas, air for example, steam or a liquid, e.g. water. There are different combinations of motive-pumped media. The most usual are water/steam - air, water/steam - water, air - water, water - water. Jet pumps working with gases as the pumped medium are called ejectors.

By applying the momentum equation, equation 3.7, in Chapter 3, to a control volume, which surrounds the medium in the mixing tube:

$$p_4 \cdot A - p_6 \cdot A - \pi \cdot D \cdot l \cdot \tau_0 = \left(\dot{m}_p + \dot{m}_d\right) \cdot c_6 - \dot{m}_d \cdot c_4 - \dot{m}_p \cdot c_5 \qquad \text{Equ 1.2}$$

or

$$\left(p_6 - p_4\right) \cdot A = \dot{m}_d\left(c_4 - c_6\right) - \dot{m}_p\left(c_6 - c_5\right) - \pi \cdot D \cdot l \cdot \tau_0 \qquad \text{Equ 1.3}$$

Certain characteristics of jet pumps can be learned by studying equation 1.3. In order that the pressure p_6, exiting the mixing tube, should be greater than p_4 the velocity leaving the jet nozzle c_4 must be considerably higher than c_6 and c_5. Considerable mixing losses are therefore also unavoidable. Pressure increase is greatest when p = 0. The shear stresses at the wall of the mixing tube have a tendency to reduce the pressure increase. A diffuser is mounted after the mixing tube where velocity is reduced and static pressure increases.

The relationship between the pumped mass flow p and the motive fluid mass flow p is called the flow coefficient and is designated:

$$q = \frac{\dot{m}_p}{\dot{m}_d} = \frac{\rho_p \cdot Q_p}{\rho_d \cdot Q_d} \qquad \text{Equ 1.4}$$

The pressure relationship for a jet pump can be defined further as:

$$z = \frac{\text{total pressure increase of the pumped media}}{\text{total pressure increase of the motive media}} =$$

$$= \frac{p_{03} - p_{02}}{p_{01} - p_{03}} = \frac{H_p}{H_d} \qquad \text{Equ 1.5}$$

Using these designations, jet pump efficiency can be expressed as:

$$\eta = q \cdot z \qquad \text{Equ 1.6}$$

Jet pump losses consist of flow losses in the nozzle, intake chamber, mixing tube and diffuser. The mixing losses constituting the greatest loss. Mixing losses are primarily dependent upon the area relationship:

$$a = \frac{\text{motive fluid nozzle outlet area}}{\text{mixing tube crosss -sectional area}} = \left(\frac{d}{D}\right)^2 \qquad \text{Equ 1.7}$$

For each combination of pressure relationship z and flow relationship q there is an optimum area relationship a, see Figure 1.110.

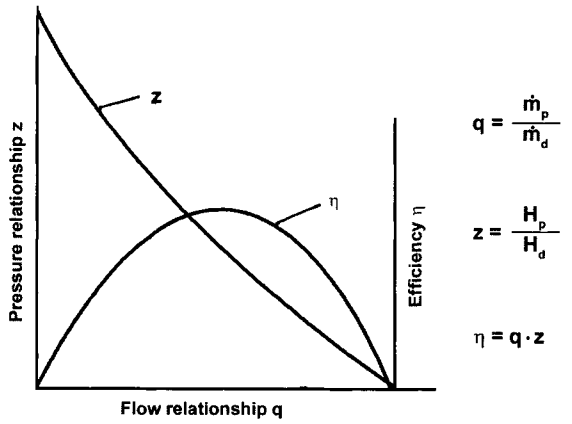

Figure 1.110 Performance curve for a jet pump

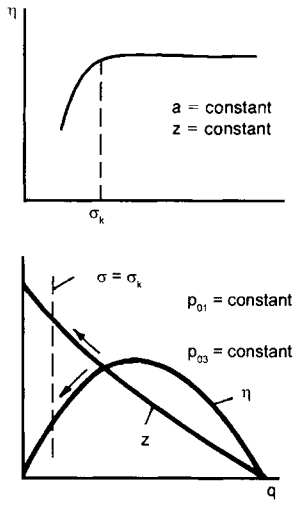

Figure 1.111 Cavitation in liquid jet pumps

Other important design parameters are the distance between the mouth of the nozzle and the start of the mixing tube; the length of the mixing tube and the angle of the diffuser. The lowest pressure in a liquid jet pump occurs in the upstream section of the mixing tube. If the lowest pressure reaches the liquid's vapour pressure then cavitation will occur. The cavitation number is defined as:

$$\sigma = \frac{p_{02} - p_v}{p_{01} - p_{02}} \qquad \begin{array}{l} p_0 = \text{total pressure} \\ p_v = \text{vapour pressure} \end{array} \qquad \text{Equ 1.8}$$

If, for a given jet pump, p_{02} is reduced at the same time as p_{01} and p_{03} is adjusted so that the pressure relationship z is maintained constant, the cavitation number s will reduce without initially changing the value of q and h. Further reduction of p_{02} causes successively more cavitation in the mixing tube and a rapid reduction in efficiency. This value of cavitation number is designated σk, see Figure 1.111.

Another way of illustrating the onset of cavitation in a liquid jet pump is that at constant motive pressure and back-pressure, p_{01} and p_{03} respectively, p_{02} reduces. The pump's optimum operating point will then follow down the performance curve, z increases, q and s reduce. For $\sigma > \sigma k$ the pump operates without any effects of cavitation. At $\sigma = \sigma k$ the performance is reduced in relation to the cavitation free operation. Prolonged operation where cavitation is present can cause damage to the mixing tube and the diffuser.

Jet pumps have certain fundamental advantages:

- No moving parts
- No lubrication requirements
- No sealing problems

LIBERTY EXHIBIT 1014, Page 80

This book belongs to Robert Durham (rdurham@thewaylabs.com) Copyright Elsevier 2024

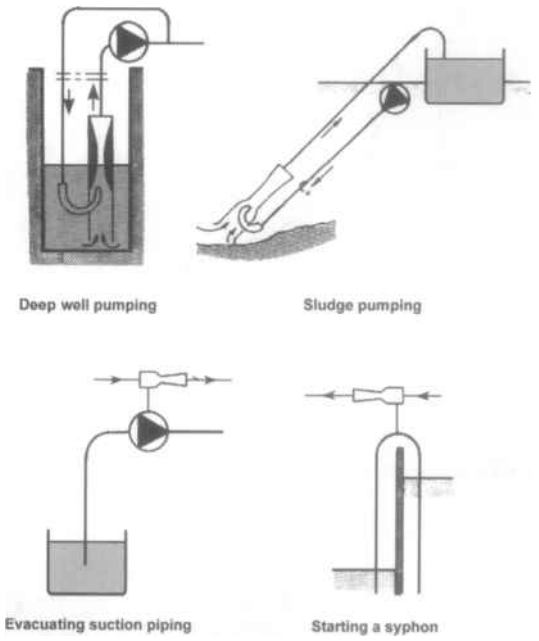

Figure 1.112 Liquid jet pumps - practical examples

- Self-priming, can evacuate the suction line
- Non-electrical, no temperature or sparking problems

The most obvious disadvantage is the low efficiency. Maximum efficiency being 25 to 30%. But with small flows the power absorbed will be small therefore low efficiency may be of no consequence.

Steam jet pumps are normally used to achieve low pressure at the inlet side. For inlet pressures of down to 103 Pa absolute, water steam is generally used as the motive medium. For even lower pressures, down to hundredths Pa, oil steam is used as the motive medium.

Practical examples include de-airing condensers, evacuating flammable gases and liquid transportation coupled with simultaneous heating requirements. Compressed air is often available and is the most usual motive medium for gas jet pumps. Some common practical examples of liquid jet pumps, usually using water as the motive medium, are illustrated in Figure 1.112.

Jet pumps are especially useful if the various combinations of motive and pumped fluid can be mixed simultaneously. Examples of this are steam jet pumps used in ventilation systems where simultaneous humidifying is required and liquid jet pumps for transporting liquids which require simultaneous dilution.

An interesting application is where the use of normal refrigerants is prohibited or a green policy is imposed. Here, water is the refrigerant and water is the motive fluid. Water temperatures down to 5 °C could be produced without difficulty. Leakage would be easily observed, without any hazards, and topping up would be simple.

Deep well pumps with ejector

Deep well pumps with ejectors complement the previously described automatic water supply packages, in Section 1.3.2, when the level of the water in a well or primarily in a borehole, lies more than 5 to 7 metres below the pump. An ejector, or jet pump is placed below the surface of the water in the borehole, which is supplied with motive water from a pump located at ground level. By means of the ejector, the water from the borehole together with the motive water is transported to the pump. It follows that it is necessary to have two hoses or pipes, as shown in Figure 1.113, between the pump and the ejector. Discharge water is taken from a separate outlet on the pump. For

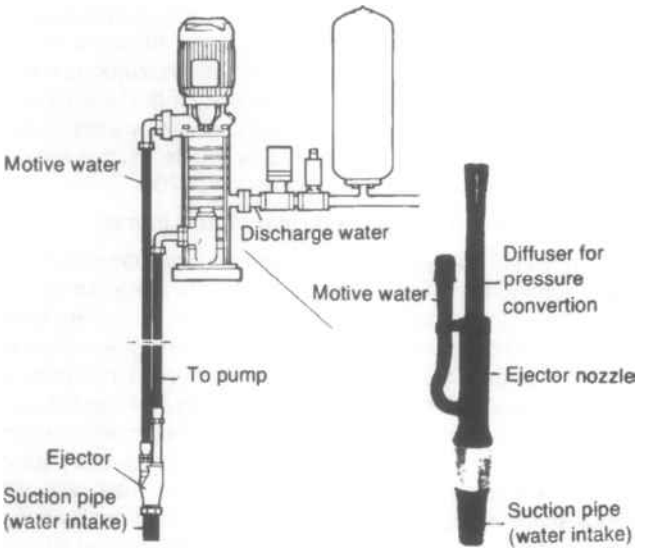

Figure 1.113 Deep well pump with ejector

multi-stage pumps this outlet is located approximately in the middle of the pump at a suitable pressure.

By using an ejector the level of the water can be more than 100 metres below the pump. Inasmuch as the water supply to the borehole is small, dry running of the pump system can be avoided if the ejector is equipped with a suction pipe which is approximately 10 m long. A self-regulating effect is thus created due to cavitation in the ejector. The pump system is primed prior to initial start by filling a small reservoir on the pump. During normal operation, start and stop is performed automatically by the pressure in an accumulator.

1.6.2 Barrel-emptying pumps (powered and hand pumps)

Barrel-emptying pumps are designed for emptying small containers and tanks. They consist either of a motor section or immersion tube and a pump section. See Figure 1.114.

The pump section is located in the lower end of the immersion tube and is driven by the motor via an extended shaft. The shaft is protected by a sealed column. The pumped liquid flows between the column and the extended shaft to the pump's outlet at the motor end. For obvious reasons, a barrel-emptying pump should be lightweight and easy to transport to the next container to be emptied.

These pumps are manufactured with a variety of immersion tube lengths, between 210 and 1200 mm. They can be made

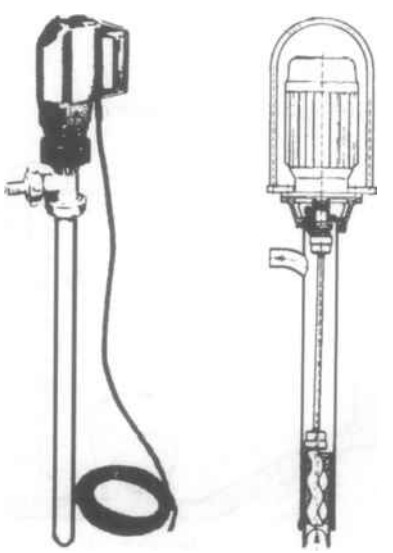

Figure 1.114 Barrel-emptying pumps for fluids and viscous liquids

This book belongs to Robert Durham (rdurham@thewaylabs.com)
Copyright Elsevier 2024

from many materials having good resistance to chemical corrosion. Pumps can be fitted with low voltage, totally enclosed electric motors, motors for use in potentially hazardous atmospheres and air motors. The pump design for fluid liquids is of the centrifugal or mixed-flow type whilst screw or progressing cavity pump types are used for viscous liquids. Pumps are capable of flows up to 14.5 m^3/h and heads of 25m.

Semi-rotary hand pumps and rotary hand pumps

When power of any type is not available muscle-power must be used. Semi-rotary hand pumps are similar to vane pumps but with valves. One set of valves are in the vanes, the others in the casing. On the filling stroke, the valve in the vane opens to allow liquid to change sides. When the vane is moved in the opposite direction, the liquid is squeezed in the casing opening the casing valve. Pumps normally have two chambers providing a suction and discharge stroke for each action. Semi-rotary hand pumps have good suction lift capabilities and work well with fairly viscous liquids. As well as barrel-emptying applications, these pumps are often used for priming lube and fuel oil systems on large engines, pumps, compressors and other equipment.

1.6.3 Hydraulic-ram pumps

The principle of a hydraulic-ram is illustrated in Figure 1.115. The supply line must be of a certain length, usually 5 to 20 m. The air vessel is located 0.5 to 3 m below the water surface and pumps water up to a higher level, usually a tank for fresh water supply.

If the waste valve suddenly closes, the mass of water in the supply pipe is subjected to rapid deceleration which causes a rise in pressure at the waste valve and delivery valve. The delivery valve opens and water is forced up into the air vessel. When the water in the supply line momentarily changes direction, a partial vacuum is created at the waste valve causing it to open, whereupon water begins to flow in the supply line again. The action of water flowing through the waste valve causes it to close again and the cycle is repeated. The following applies for the hydraulic ram:

$$Q_p \cdot H_p = \eta \cdot Q_d \cdot H_d \qquad \text{Equ 1.9}$$

or

$$Q_d = \frac{Q_p}{\eta} \cdot \frac{H_p}{H_d} \qquad \text{Equ 1.10}$$

where:

Q_d = Motive water velocity in supply line (m/s)

Q_p = Delivered velocity in delivery line (m/s)

H_d = Supply head(m)

H_p = Delivery head(m)

η = Efficiency (non-dimensional)

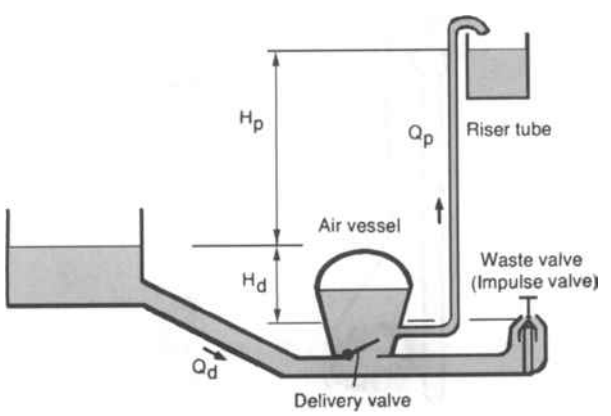

Figure 1.115 Diagrammatic arrangement of the hydraulic-ram pump

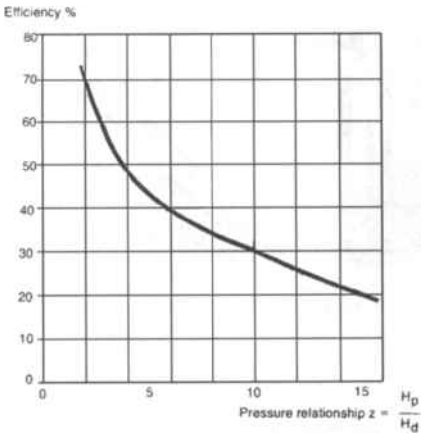

Figure 1.116 Efficiency of hydraulic-ram pump

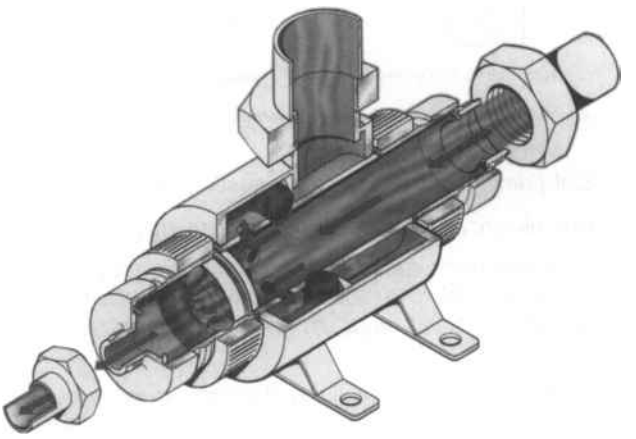

Figure 1.117 Hydraulic-ram pump
Courtesy of Papa Pump Ltd

The efficiency depends upon the quotient z, H_p/H_d according to Figure 1.116. By means of comparison, it may be noted that for large scale water delivery via a water turbine, electric grid system and water pump, efficiencies of up to about 50% can be obtained, whereas for domestic use via electric grid and water pump the efficiency is usually less than 10%.

The hydraulic ram has long been used for transporting fresh water for domestic and agricultural purposes. There are installations which have been in use for more than 50 years. Hydraulic rams are sold in many sizes for supply water flows Qd from 60 l/h to 9 m^3/h with total delivery heads of up to about 40 m. Figure 1.117 shows a section through a typical pump.

1.6.4 Air-lift pumps

The air-lift pump consists of a riser tube immersed in the pumped liquid, a compressed-air line and a pressure chamber where air forces the liquid, via small holes, into the riser tube, as shown in Figure 1.118. The air/liquid mixture is lighter than the surrounding liquid and therefore rises up the tube. The flow of liquid up the riser tube increases as the flow of air is increased up to a certain maximum value, after which it begins to decrease.

The air supply must be compressed to a pressure which is equivalent to the immersed depth plus the losses in the piping and inlet holes. The product of the work done during compression and the air mass flow, neglecting the efficiency of the compressor, is equal to the power input to the pump P_{input}.

The pump efficiency

LIBERTY EXHIBIT 1014, Page 82

This book belongs to Robert Durham (rdurham@thewaylabs.com) Copyright Elsevier 2024

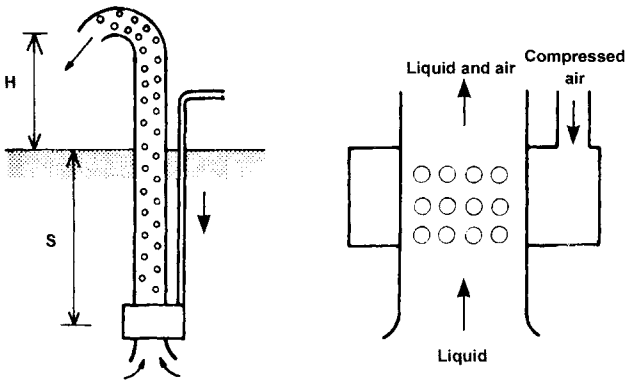

Figure 1.118 Air-lift pump

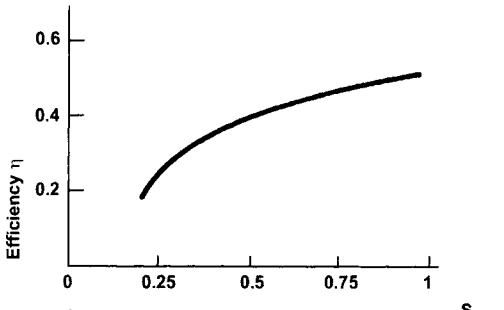

$\frac{S}{S+H}$	L_1 (kg/m³)
0.3	10
0.5	4
0.7	1.5

Figure 1.119 Examples of maximum efficiency and air requirement for air-lift pump - Pump efficiency neglects compressor efficiency

$$\eta = \frac{\dot{m}_{Liquid} \cdot H}{P_{input}} \qquad \text{Equ 1.11}$$

is greatly dependent upon the immersed depth in relation to the delivery head, Figure 1.119. The quantity of air required in kg per cubic metre of pumped liquid, designated L, is greatly affected by the immersed depth.

The advantages of the air-lift pump are:

- Simple construction, no moving parts
- No sealing problems
- Small risk of blockage
- Not sensitive to temperature

The disadvantages are:

- Low efficiency
- Immersed depth requirements, S/H > I
- Compressed air can be expensive

Air-lift pumps are used for pumping sludge, contaminated liquid, large particles, sugar beets, and also hot or corrosive fluids.

1.6.5 Contraction pumps

A contraction pump consists of a special rubber hose which is reinforced in such a way that when it is stretched by means of applying an axial force, the diametral contraction is such that the volume is reduced. Pumping effect is achieved by fitting non-return valves to each end of the hose, suction and discharge valves. Suction is achieved as a result of the hose returning to its original length and volume as a result of releasing the axial force.

Efficiency is very good since the only losses are valve losses and hysteresis losses in the rubber, which can be reduced to a minimum within the pump's most suitable operating range. Typical values are 95% to 98%.

Applications include hand operated or motor driven deep well pumps for well depths of 30 to 100 m and borehole diameters of 50 to 150 mm. Pump performance depends upon the type of hose. Normally hose stretch is 10% of its length and the transported volume is 5 to 20% of the internal hose volume. For hand operated pumps the flow volume is within the region of 5 to 20 l/min depending upon the depth of the well. A particular advantage is the simplicity of installation and removal and the single tube, which functions both as a pull-rod and a delivery pipe, resulting in considerable weight and cost savings.

1.6.6 Macerators

Some solids handling pumps include a macerator in the pump inlet. A macerator is a type of solids grinding or cutting machine which ensures solids entering the pump are below a certain size. Macerators cannot normally be used for hard, strong solids such as gravel, copper ore or tailings. They are most often used for long stringy solids as found in pulp, sewage and rubbish handling. The macerator ensures that solids entering the pump will pass right through the pump without fouling. Some macerators may be capable of handling soft coal. Extra power must be available to cover the macerator's requirements.

1.7 Useful references

Fire & Explosion ATEX Regulations Part 1. The Regulations implement a European Directive called, the ATEX Directive No.1992/92, concerned with the risks from fire and explosion arising from flammable substances stored or used in the workplace. The Regulations apply from 1st July 2003 to new workplaces or workplaces which undergo modifications, extensions or restructuring after July 2003. Existing workplaces must comply by 30th June 2006, but it should be noted that the requirements of this legislation are replicated in other legislation without such a time provision and reference should be made to the Safety, Health and Welfare at Work (General Application) Regulations the Safety, Health and Welfare at Work (Chemical Agents) Regulations, 2001.

ATEX Manufacturers Directive 94/9/EC. This directive defines each of the following product groups for use in potentially explosive atmospheres: Electrical and non-electrical equipment, Electrical and non-electrical protective systems, Electrical and non-electrical components, Electrical and non-electrical safety devices, It places responsibilities on the manufacturer of these products.

ATEX User Directive 99/92/EC. This directive is concerned with the health and safety of workers with relation to potentially explosive atmospheres. It places responsibilities on an employer.

Dangerous Substances and Explosive Atmospheres Regulations (DSEAR). From July 2006 employers must have completed the risk assessment, classification and documentation of their workplace and personnel.

ISO 2858 End-suction centrifugal pumps (rating 16 bar) - Designation, nominal duty point and dimensions.

ISO 3069 End-suction centrifugal pumps - Dimensions of cavities for mechanical seals and for soft packing.

ISO 2858End-suction centrifugal pumps (rating 16 bar) — Designation, nominal duty point and dimensions.

ASME/ANSI B73.1 Specification for Horizontal End Suction Centrifugal Pumps for Chemical Process.

LIBERTY EXHIBIT 1014, Page 83

This book belongs to Robert Durham (rdurham@thewaylabs.com)
Copyright Elsevier 2024

ISO 13709 Centrifugal pumps for petroleum, petrochemical and natural gas industries.

ANSI/API STD 610 Centrifugal Pumps for Petroleum, Petrochemical and Natural Gas Industries.

ISO 13709 Centrifugal pumps for petroleum, petrochemical and natural gas industries.

ASME/ANSI B73.2 Specifications for Vertical In-Line Centrifugal Pumps for Chemical Process.

ISO 21049 Pumps - Shaft sealing systems for centrifugal and rotary pumps.

API 682 Shaft Sealing Systems for Centrifugal and Rotary Pumps.

LIBERTY EXHIBIT 1014, Page 84

This book belongs to Robert Durham (rdurham@thewaylabs.com) Copyright Elsevier 2024

Properties of liquids 2

2.1 Explanation of terms
- 2.1.1 Introduction
- 2.1.2 Changes of state
  - 2.1.2.1 Comments
- 2.1.3 Viscosity
  - 2.1.3.1 Newton's Law of Viscosity
  - 2.1.3.2 Absolute viscosity
  - 2.1.3.3 Kinematic viscosity
  - 2.1.3.4 Newtonian liquids
  - 2.1.3.5 Non-Newtonian liquids
  - 2.1.3.6 Comments
  - 2.1.3.7 Penetration
- 2.1.4 Density and relative density
  - 2.1.4.1 Density
  - 2.1.4.2 Relative density
- 2.1.5 Compressibility
  - 2.1.5.1 Acoustic velocity
- 2.1.6 pH value
- 2.1.7 Hazards
  - 2.1.7.1 Health hazards
  - 2.1.7.2 Physical hazards
  - 2.1.7.3 Environmental hazards
  - 2.1.7.4 Installation hazard assessment
  - 2.1.7.5 Useful sources of information

2.2 Water
- 2.2.1 Demineralized water
- 2.2.2 Fresh water
  - 2.2.2.1 General
  - 2.2.2.2 pH value and choice of material
  - 2.2.2.3 Hardness of water
  - 2.2.2.4 Carbonic acid and carbonate equilibrium
- 2.2.3 Brackish water
- 2.2.4 Seawater
  - 2.2.4.1 General
  - 2.2.4.2 The qualities of seawater and corrosion
  - 2.2.4.3 Choice of materials

2.3 Oils
- 2.3.1 General
  - 2.3.1.1 Cloud point, pour point and solidifying point
- 2.3.2 Viscosity
  - 2.3.2.1 Burner oils
  - 2.3.2.2 Engine oils
  - 2.3.2.3 Gearbox oils
  - 2.3.2.4 Industrial oils
  - 2.3.3.5 Other liquid data

2.4 Liquid-solid mixtures
- 2.4.1 General
  - 2.4.1.1 Liquid properties
  - 2.4.1.2 Size of particle
  - 2.4.1.3 Particle density
  - 2.4.1.4 Shape, hardness and abrasiveness
  - 2.4.1.5 Deformable particles
  - 2.4.1.6 Friable particles
  - 2.4.1.7 Solids concentration
  - 2.4.1.8 Velocity
- 2.4.2 Sewage
- 2.4.3 Sludge
- 2.4.4 Pulps
  - 2.4.4.1 General
  - 2.4.4.2 Pulp quality
  - 2.4.4.3 Air content in pulp
  - 2.4.4.4 Pulp properties which complicate pumping

2.5 Liquid-gas mixtures
- 2.5.1 General
- 2.5.2 Useful observations

2.6 Table of liquid properties
- 2.6.1 Introduction
- 2.6.2 Liquid Table
- 2.6.3 Supplementary diagrams

2.7 Useful references

This book belongs to Robert Durham (rdurham@thewaylabs.com)

Copyright Elsevier 2024

2.1 Explanation of terms

2.1.1 Introduction

Liquids, together with solids and gases, are the forms in which substances occur in nature: the solid state, the liquid state and the gaseous state. The three physical states are sometimes called phases. Liquids and gases can be combined in the general group called fluids. Fluids differ from solids in that they will readily change shape to suit the container.

A solid body subjected to a small shear force undergoes a small elastic deformation and returns to its original shape when the force is removed. When subjected to larger shear force the shape may be permanently changed due to plastic deformation.

A fluid when subjected to an arbitrarily small shear force undergoes a continuous deformation. This happens regardless of the inertia of the fluid. For a fluid the magnitude of the shear force and the speed of deformation are directly related. In a solid body it is the deformation itself which is related to the shear force.

A fluid may be either a liquid or a gas. A gas differs from a liquid in that it will expand to completely fill the container. A gas at conditions very close to boiling point or in contact with the liquid state is usually called a vapour. Fluids are compressible; gases being much more compressible than liquids.

A substance can exist in all three states. A typical example of this is ice, water and steam. When ice is heated at constant pressure, the ice converts to water at the melting point and to steam at the boiling point. If the steam pressure is increased at constant temperature, the steam converts to water at the saturation (vapour) pressure.

Solid particles can be suspended or mixed in a liquid. Such a combination, liquid plus particles, is called a suspension. When the particles distribute themselves evenly through the liquid, we speak of a homogeneous mixture. When concentration gradients occur, we speak of a heterogeneous mixture.

The word solution refers to an otherwise pure liquid in which a solid, another liquid or gas has been dissolved.

Two liquids which are not soluble in each other, can be mixed by mechanical action. Such a mixture is called an emulsion. Emulsions can be very difficult to separate.

The properties of liquids vary greatly.. For the purposes of pumping the following characteristics of liquids should generally be known:-

- changes of state
- viscosity

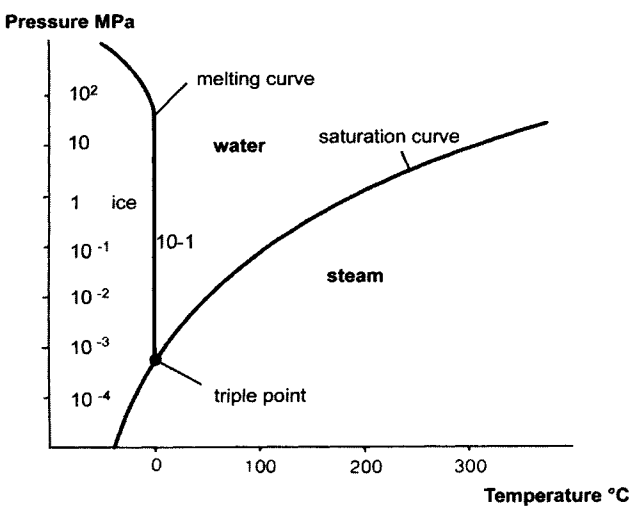

Figure 2.1 Phase diagram for water

- density
- compressibility
- pH value
- hazards

2.1.2 Changes of state

Melting point

SI unit °C

The melting point is the temperature at which a substance changes from a solid to a liquid state and also solidifies from a liquid to a solid. The melting point in most substances is pressure dependent only to a very limited degree. In those cases where the pressure dependence has to be taken into account, the boundary between solid and liquid state is shown by the melting curve in a pressure-temperature diagram.

Boiling point

SI unit °C

The boiling point is the temperature at which a liquid converts to vapour or gas at a particular local pressure. The boiling point is usually stated at a standardised atmospheric pressure, 101.325 kPa (760 mm Hg). The boiling point of water at this pressure is 100°C. The boiling point of all liquids is heavily dependent upon pressure.

Vapour pressure

SI unit Pa, kPa, MPa

Preferred unit bar

All liquids have a tendency to evaporate. Vapour or gas accumulates above the free surface of a liquid by reason of interchange of molecules. The partial pressure of the vapour rises to a point at which as many molecules are being returned to the liquid as are leaving it. At this equilibrium state the partial pressure of the liquid is called the vapour or saturation pressure.

Vapour pressure depends on temperature alone and increases with the temperature of the liquid. At a particular temperature, the equilibrium pressure above the surface of a liquid can never be less than the vapour pressure. Any attempt to lower the pressure of the vapour (by means of a vacuum pump for example) immediately results in increased evaporation, i.e. the liquid boils. If the pressure in a liquid decreases locally to the vapour pressure at the actual temperature, vapour bubbles are generated in the liquid. In a pump installation, the formation of vapour bubbles (cavitation) can cause serious mechanical damage and can seriously diminish the performance of the installation.

Various liquids display widely differing values of vapour pressure as a function of temperature. Some substances in a solid state can also change directly to the gaseous state without passing through the liquid state. As an example, a complete pressure-temperature diagram, showing the phases for water is shown in Figure 2.1. At the triple point, all three states may exist simultaneously. In practice the only substance which exhibits the solid-gas transformation is carbon dioxide.

NOTE: The SI unit of pressure is very small. In most practical applications it may be necessary to use Pa or kPa for suction pressures and MPa for discharge pressures. The pump industry is concerned that the change in prefix could confuse operators and lead to potentially dangerous situations. The MPa is a very large unit; small numbers representing large pressures. The bar is a much more suitable unit and does not require prefixes.

Whenever a pressure value is quoted it must be qualified as absolute or gauge.

LIBERTY EXHIBIT 1014, Page 86

This book belongs to Robert Durham (rdurham@thewaylabs.com) Copyright Elsevier 2024

2.1.2.1 Comments

Melting point (freezing or solidifying point) must be known when assessing the pumpability of a liquid and the risk of blockage, freezing or solidifying.

Information regarding the vapour pressure is required for calculating the permitted suction lift and $NPSH_a/NPIP_a$. Vapour pressure is a critical factor in the choice of pump type, speed and shaft sealing requirements.

2.1.3 Viscosity

SI units

Absolute viscosity	Ns/m^2
Kinematic viscosity	m^2/s

Other units

Absolute viscosity	cP
Kinematic viscosity	cSt

Viscosity (the ability to flow) is a property of liquids treated under the heading of rheology. The word rheology derives from the Greek "rheos" meaning flow.

Between two layers of liquid flowing at different speeds, a tangential resistance, a shear stress, is developed because of molecular effects. We say that the shear stress is caused by the internal friction of the liquid, or conversely that the liquid transmits shear forces by reason of its internal friction.

A liquid in motion is continuously deformed by the effects of the shear forces. The magnitude of the stress depends on the rate of shear deformation and the sluggishness of the liquid, i.e. the viscosity.

2.1.3.1 Newton's Law of Viscosity

Viscosity is defined for flow in layers, laminar flow, by Newton's Law of Viscosity, see Figure 2.2.

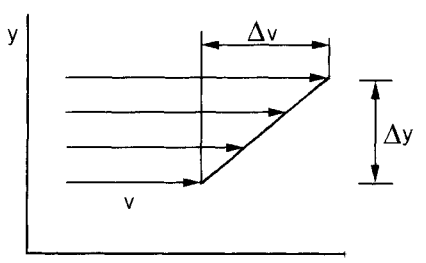

Figure 2.2 Definition of viscosity

$$\tau = \mu \frac{\Delta v}{\Delta y} \qquad \text{Equ 2.1}$$

where:

τ = shear stress ($N/m^{2)}$

μ = dynamic viscosity (kg/ms)

Δv = change in viscosity (m/s)

Δy = distance between layers (m)

2.1.3.2 Absolute viscosity

In the SI system the unit is:

1 kg/ms = 1 Ns/m^2

Other units are:

1 Poise = 1P = 0.1 kg/ms

or

1 centipoise = 1 cP = 0.01 P = 0.001 kg/ms

2.1.3.3 Kinematic viscosity

In viscous flow equations the dynamic viscosity divided by the density of the liquid is given the symbol ν. This parameter is called kinematic viscosity.

$$\nu = \frac{\mu}{\rho} \qquad \text{Equ 2.2}$$

where

ν = kinematic viscosity (m^2/s)

μ = dynamic viscosity (kg/ms)

ρ = density (kg/m^3)

The SI unit for kinematic viscosity is 1 m^2/s.

Sometimes, for convenience, the following units are used:

Stoke = 1 St = 0.0001 m^2/s

or more usually

1 cSt = 0.01 St = 0.000001 m^2/s = 1 mm^2/s

Water at 20°C and 0.1 MPa has a kinematic viscosity of 1 cSt.

2.1.3.4 Newtonian liquids

A liquid which follows Newton's Law of Viscosity in laminar flow and has constant viscosity, regardless of shear rate and time, is known as a Newtonian liquid, see Figure 2.3.

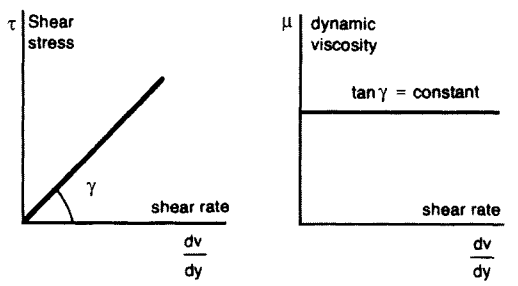

Figure 2.3 Newtonian liquid

Examples: water, aqueous solutions, low molecular liquids, oils and oil distillates. Black liquor, liquid resin and resinous sebacic acid also behave like Newtonian liquids.

2.1.3.5 Non-Newtonian liquids

Liquids which do not fulfil the requirements for Newtonian liquids are called non-Newtonian liquids. Most high molecular liquids, suspensions and emulsions display non-Newtonian properties. Non-Newtonian liquids usually fall into three main groups:

I) Non time-dependent

pseudo-plastic

dilatant

plastic

ii) Time-dependent

thixotropic

rheopectic

irreversible

iii) Visco-elastic

Non time-dependent liquids are not affected by the length of time of the flow process, see Figure 2.4. The shear stress in the case of laminar flow at a given temperature is determined entirely by the shear rate. In analogy with Newtonian liquids, it may be stated:

This book belongs to Robert Durham (rdurham@thewaylabs.com) Copyright Elsevier 2024

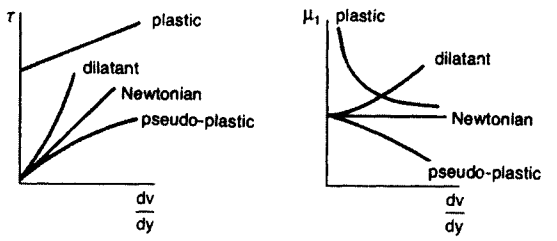

Figure 2.4 Non time-dependent non-Newtonian liquids

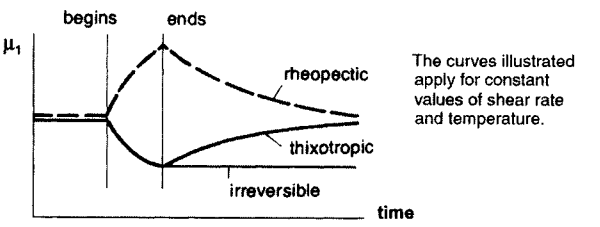

Figure 2.5 Illustrations of time-dependent non-Newtonian liquids

$$\tau = \mu_1 \frac{dv}{dy} \qquad \text{Equ 2.3}$$

where:

μ_1 = apparent dynamic viscosity

In the case of pseudo-plastic liquids, the apparent viscosity decreases with increasing shear rate.

Examples: high molecular solutions, rubber, latex, certain molten materials, mayonnaise.

In the case of dilatant liquids the apparent viscosity increases with increasing shear rate.

Examples: base in oil paints, suspensions with high concentrations of small particles: cement, lime, sand, starch.

Plastic liquids require a certain minimum shear stress - yield stress - in order to initiate flow. The apparent viscosity decreases from an infinitely high value as the shear rate increases.

Examples: toothpaste, ointments, grease, margarine, paper pulp, printers ink, emulsions.

Time-dependent liquids,the apparent viscosity is affected not only by the shear rate but also by the length of time during which the flow continues, see Figure 2.5.

In the case of thixotropic liquids, μ_1 diminishes when flow commences. When the flow ceases, the liquid returns to its original viscosity after a certain period of time.

Examples: paint, gelatinous foodstuffs.

Rheopectic liquids display increasing viscosity under mechanical influence and resume their original viscosity when the influence ceases.

Examples: certain suspensions of gypsum.

Irreversible liquids do not resume their original viscosity at all or perhaps only after a very long time after the removal of the influence. These liquids must be pumped carefully.

Examples: cheese coagulates, yoghurt, marmalade.

visco-elastic liquids, contain liquids exhibiting both elastic and viscous properties. Visco-elastic liquids undergo both elastic and viscous deformations. When the flow ceases there is a certain reversal of elastic deformation.

Examples: asphalt, liquid nylon, rubber, polymer solutions.

2.1.3.6 Comments

- Dynamic viscosity is temperature dependent. Increasing temperature results in diminishing viscosity. Certain liquids can be pumped easier when heated.
- Viscosity is also an indication of the lubricating qualities of the liquid. At low values, less than 1 cSt, additional lubrication may be necessary.
- Temperature dependence on density has also to be considered in kinematic viscosity. At pressures of 10 MPa a certain pressure dependence can be observed in the viscosity.
- Loss coefficients in pipe flows are dependent upon Reynold's Number which is in turn dependent upon dynamic viscosity.
- The performance of rotodynamic pumps depends upon Reynold's Number. Standard pump data is always for water and this has to be corrected when pumping other liquids. Rotary positive displacement pumps are better for high viscosities but there is no specific value to aid selection. The viscosity effects are dependent upon the pump size. For rotodynamic pumps, increased viscosity reduces efficiency and increases NPSHr. The effects of viscosity on positive displacement pumps are dependent upon the pump type as well as size.
- Viscosity is defined as the ratio of shear stress and shear rate in laminar flow. In the case of turbulent flow, this ratio is affected by exchange of momentum between the layers caused by the random motion of the liquid particles.
- In the past viscosity has been specified by the results of proprietary test methods such as Engler, Saybolt and Redwood. These tests measured the time taken for an oil sample to flow through an orifice. In Chapter 17, Units and Conversion factors, the necessary basis is given for conversion to SI units.

2.1.3.7 Penetration

For some non-Newtonian liquids, for example grease and asphalt, determination of viscosity does not provide sufficient information about flow properties and supplementary information regarding consistency is required. This information is obtained from determination of penetration.

For greases, penetration is a measure of consistency. This is the depth, in tenths of a millimetre, to which a cone forces its way down into a test receptacle containing a grease sample heated to 25°C. The penetration depends on whether the consistency is changed by stirring, shaking and so on. Hard greases have low penetration figures whilst soft greases have high penetration. Manufacturers of greases state the penetration figure for each quality, e.g. 240 - 325. Two lubricant greases, furthermore, may have the same penetration figure but may still have different flow capabilities depending upon the viscosity of their respective component oils. The oil grades and thickeners should also be specified.

Determination of penetration for asphalt is carried out in principle at 25°C in the same way, as with lubricant grease, but using a loaded pin instead of a cone. The values measured are used to classify asphalt, typical penetration figures being 10 - 50. See BS 2000- 50 : 1993, Methods of tests for petroleum and its products, cone penetration of lubricating grease - which is equivalent to ISO 2137.

2.1.4 Density and relative density

2.1.4.1 Density

Unit, kg/m^3, symbol ρ

The density of a liquid is the relationship between the mass of the liquid and its volume. The density of liquids changes slightly with temperature and very slightly with pressure unless the liq-

LIBERTY EXHIBIT 1014, Page 88

This book belongs to Robert Durham (rdurham@thewaylabs.com) Copyright Elsevier 2024

uid is very compressible. The density of a liquid is to a very slight extent affected by the quantity of dissolved gases. Since the ability to dissolve gases is temperature and pressure dependent, there is an indirect dependence on these parameters. The affect of dissolved gases on density can generally be neglected however.

2.1.4.2 Relative density

Unit, non-dimensional, symbol d

Relative density, formerly called specific gravity, is the ratio of a liquid's density to water at standard conditions, atmospheric pressure, 101.325 kPa and 4°C.

NOTE: Information about the density of a liquid, or its relative density, is required when converting pressure to head. Rotodynamic pumps calculate power using differential head and specific gravity. Positive displacement pumps calculate power using differential pressure therefore density or specific gravity has no influence.

2.1.5 Compressibility

All liquids are compressible to some extent. This compressibility can generally be neglected when considering rotodynamic pumps. However when considering reciprocating positive displacement pumps its value must be quantified. It may be noted for example that water is about 100 times more elastic than steel and about 0.012 times as elastic as air. Compressibility is very temperature dependent and slightly pressure dependent. Any values used must relate to the operating conditions. Classically, compressibility is expressed in terms of the bulk modulus defined by the relationship:

$$\text{Compressibility} = \frac{1}{K} \qquad \text{Equ 2.4}$$

$$K = \rho \cdot \frac{\Delta p}{\Delta \rho} = -V\frac{\Delta p}{\Delta V} \qquad \text{Equ 2.5}$$

where:

K = bulk modulus of the liquid (N/m^2)

p = liquid pressure (Pa)

ρ = density of the liquid (kg/m^3)

V = volume of liquid (m^3)

Δ = change of magnitude

The change in volume due to a change in pressure can be calculated directly from the definition

$$\Delta V = -\frac{V\Delta p}{K} \qquad \text{Equ 2.6}$$

where the minus sign indicates that the volume decreases with increasing pressure.

Densities and specific volumes of water under a wide range of pressures and temperatures are readily available in good steam tables. However compressibility data for other liquids can be difficult to obtain. Some data is available in the form of "contraction per unit volume per unit pressure increase" which is designated by χ. In the cases where definitive data is not available the compressibility can be approximated as a multiple of water compressibility.

2.1.5.1 Acoustic velocity

In the case of acoustics however, compressibility is of critical importance. The acoustic velocity, or wave speed, is directly related to the bulk modulus and compressibility. If acoustic resonance occurs in the pipework the acoustic velocity must be known to affect a successful cure. Acoustic resonance can be a very serious problem creating destructive piping vibrations and large pressure pulsations. In suction pipework the resonance can create cavitation conditions leading to pump damage and reduced performance.

The acoustic velocity calculated from the bulk modulus applies to pure clean liquid. If the liquid contains gas bubbles or solid particles the acoustic velocity will be greatly reduced from the theoretical value. Testing may be the only approach to find the true value. See Table 2.1 for indicative values of bulk modulus and acoustic velocity.

2.1.6 pH value

The concentration of hydrogen ions in an aqueous solution is a measure of the acidity of the solution and is expressed as the pH value.

The definition of the pH value is

$$pH = \log_{10}\frac{1}{H^+} \qquad \text{Equ 2.7}$$

where:

H^+ = concentration of hydrogen ions (mol/l).

If, for example, $H^+ = 10^{-4}$ mol/l, then the pH value = 4.

The hydrogen exponent is another name for the pH value.

The numerical value of pH in Figure 2.6 varies between the limits 0 and 14. Acid solutions have pH values between 0 and 6.5, neutral solutions pH = 6.5 to 7.5 and the alkaline or base solutions pH = 7.5 to 14. Acid solutions turn blue litmus red and alkaline solutions turn red litmus blue.

All aqueous solutions reacting as acids contain a surfeit of hydrogen ions H^+. All aqueous solutions reacting as alkalis have a surfeit of hydroxide ions OH^-. The product of the hydrogen ion

Liquid	Bulk modulus N/m^2	Wave propagation speed m/s	Estimated wave propagation speed in pipe	
			Steel	PVC
Acetone	$0.8 \cdot 10^9$	1000	850	280
Petrol	$1.0 \cdot 10^9$	1170	1000	320
Ethylene glycol	$2.7 \cdot 10^9$	1560	1150	300
Glycerol	$4.5 \cdot 10^9$	1890	1400	380
Chloroform	$1.0 \cdot 10^9$	820	700	230
Mercury	$24 \cdot 10^9$	1330	430	-
Methanol	$0.8 \cdot 10^9$	1000	850	280
Oil	$1.5 \cdot 10^9$	1300	1000	300
Turpentine	$1.4 \cdot 10^9$	1270	1000	300
Water, distilled	$2.2 \cdot 10^9$	1480	1100	300
Water, sea	$2.4 \cdot 10^9$	1530	1100	300

Table 2.1 Elastic properties of some liquids at 25°C and 0.1 MPa (1bar)

This book belongs to Robert Durham (rdurham@thewaylabs.com) Copyright Elsevier 2024

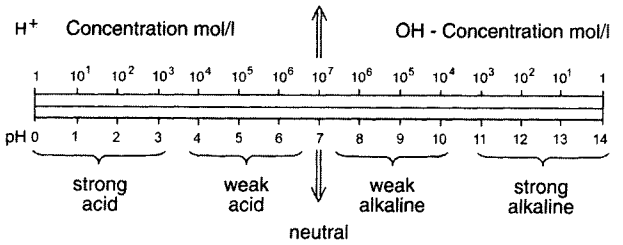

Figure 2.6 Ion concentration, pH value, degree of acidity and alkalinity

concentration and the hydroxide ion concentration is always a constant at any fixed temperature.

At 22°C for example the ion product is:

$$H^+ \times OH^- = 10^{-14} \text{ mol/l}$$

When the hydrogen ion concentration and the hydroxide ion concentration are equal, i.e.

$$H^+ = OH^- = 10^{-7} \text{ then}$$

pH = 7 and the solution reacts neutrally.

Pure water is a very poor electrical conductor. Water only acquires good conductivity in solutions of so-called electrolytes such as salts, acids or bases. When dissolved in water, these substances split into two components with opposing electrical charges, by means of which an electric current may be carried. This act of splitting is called electrolytic dissociation. The charged particles so formed are called ions. Distinction is made between the positively charged cation particles and the negatively charged anion particles. The positively charged particles are symbolised by $^+$ and the negatively charged particles by $^-$. Metals and hydrogen in acids produce cations by electrolytic dissociation. The acid remnants and the alkaline hydroxyl groups on the other hand generate negatively- charged anions.

For liquids with pH values of less than 4, the hydrogen ion concentration is a powerful factor affecting the speed of the dissolving process for most metals. The positively-charged hydrogen ions relinquish their charge at the surface of the metal to the metal atoms and break down their solid connections, whilst they themselves, robbed of their ion construction, return to the atomic state and unite into molecules leaving the metal surface in the form of gas bubbles. The dissolving process is faster, therefore, when the concentration of hydrogen ions is greater, i.e. the lower the pH value of the liquid.

Within the pH range of about 4 to 9, the oxygen present in the liquid, from air for example, has an influence on the corrosion process, say, for iron. The discharged hydrogen does not leave in the form of gas bubbles, as is the case with pH values in the region of 0 to 4, but combines immediately with the oxygen to produce water. At the same time the iron is oxidised to rust. The affect of pH on non-metallic materials must be considered on a case by case basis, see Figure 2.7. See also Chapter 7, Pump materials.

Although pH is an important factor in the attack of metals, this is by no means the only factor which needs to be considered. The concentration (as distinct from pH) of the chemical, particularly of acids and alkalis, has an important bearing on the degree of corrosion or attack. Dissolved oxygen plays an important part in corrosion of metal components. There is now a whole range of organic chemical compounds and biological compounds which will give rise to chemical attack, and many of these are completely unrelated to pH. Even very small concentrations of some modern chemicals can create serious hazards both from the point of view of chemical attack, leakage and toxic hazards.

2.1.7 Hazards

The word "hazard" is in common use in the English language. Its use in *Pumping Manual International* is defined as follows:

Hazard: — a physical situation with a potential for human injury, damage to property, damage to the environment or some combination of these.

It can be seen from the definition that three distinct types of affect are considered but in some cases one hazard may lead to others. Fire, for example, can be a serious health hazard.

A hazardous substance: — a substance which, by virtue of its chemical properties, constitutes a hazard.

2.1.7.1 Health hazards

The pump user must consider the affects of the liquid, and its vapour, on the health of the operators and employees. Most countries have legislation limiting the exposure of employees to substances judged to be hazardous. If the liquid to be pumped is listed in local regulations the pump manufacturer must be informed. The type of health hazard must be specified.

Another health hazard, sometimes not recognised as such, is noise. Some countries have regulations stipulating the acceptable noise levels and exposure times. Some pump types are inherently noisy. Large equipment, in general, is noisy. Noise levels can be attenuated by fitting acoustic enclosures however these tend to drastically diminish the maintainability of the equipment by hindering access. In some instances, costly acoustic enclosures have been removed at site and scrapped in order to achieve acceptable access. One easy solution to this hazard is to declare certain areas as "Ear Protection Zones".

2.1.7.2 Physical hazards

Physical hazards include fire and explosions as well as corrosion and temperature. The degree of risk attached to the hazard is dependent upon the properties of the liquid and the vapour; if the liquid evaporates quickly at ambient temperature and whether the vapour is lighter or heavier than air. A light vapour can disperse easily in an open installation whereas a heavy vapour can become trapped in sumps, depressions and pipe trenches. The upper and lower limits of flammability are important when considering allowable concentrations.

The pumping equipment itself may pose a physical hazard. Within the EU, the Machinery Directive, 89/392/EEC, (amended 98/37/EEC), places the responsibility for safety on the machine designer. The machine must be designed to be safe in all aspects; installation, commissioning, operation and maintenance. If the designer is unable to devise a completely safe machine the areas of concern must be documented and recommended precautions communicated to the user. Because this is a legal requirement in all EU countries the machine designer may not be relieved of the obligations by a third party.

2.1.7.3 Environmental hazards

The Earth's resources and waste-disposal capabilities are finite. Stricter limitations are being imposed gradually on the amount of pollutant which can be released while the list of pollutants is becoming longer. The pump user must be aware of the full consequences of leakage of liquid/vapour from the pump and installation. The environment can be considered in two separate identities:

- local
- global

If the site is surrounded or close to a town what risk is likely to the population, structures or habitat in the event of a failure? In the global sense, what are the likely cumulative affects of product leakage?

2.1.7.4 Installation hazard assessment

The user and system designer are in full possession of all the relevant available facts regarding the liquid and the installation. Any assumptions made should be passed to the pump manu-

LIBERTY EXHIBIT 1014, Page 90

This book belongs to Robert Durham (rdurham@thewaylabs.com) Copyright Elsevier 2024

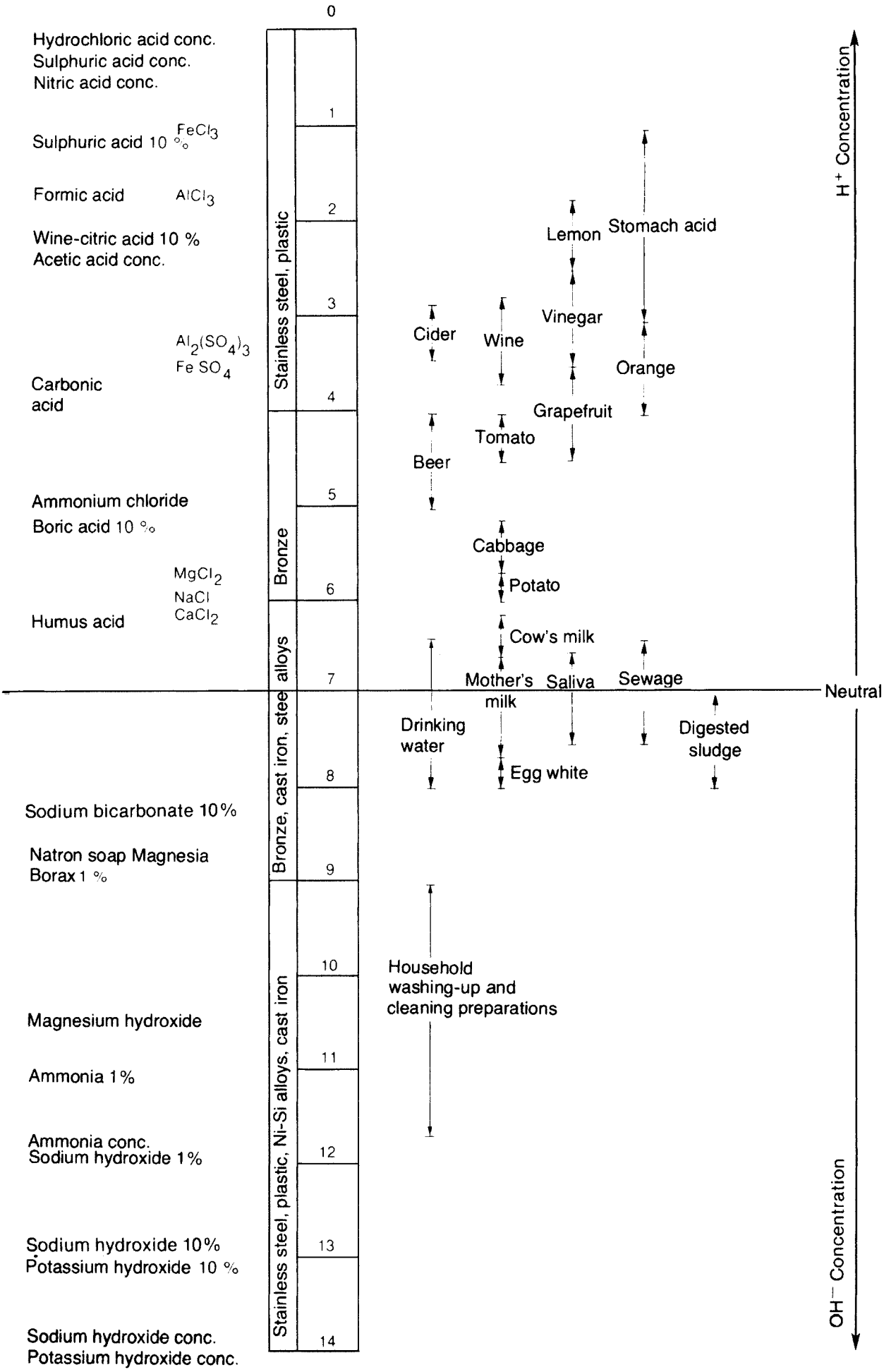

Figure 2.7 Effect of pH values on non-metallic materials. See also Chapter 7

This book belongs to Robert Durham (rdurham@thewaylabs.com)
Copyright Elsevier 2024

facturer and identified as such. The user must assess the risks attached to all the possible hazards and decide what, if any, leakage is acceptable. Liquid properties reviewed during the assessment, see Table 2.2, should include:

Auto ignition point	The temperature above which a substance will start to burn without an ignition source being necessary
Flash point	The lowest temperature at which a liquid gives off sufficient vapour to burn if an ignition source is present
Atmospheric boiling point	The temperature at which the liquid boils at atmospheric pressure, 101.325 kPa
Vapour specific gravity	Specific gravity is the ratio of a vapour's density to air at standard conditions, atmospheric pressure, 101.325 kPa and 4°C
Surface tension	The surface tension at process temperature will indicate how difficult the liquid is to seal

Table 2.2 Liquid properties reviewed during hazard assessment

The nature of the hazards will also dictate the type of pipe connections to be used; screwed, flat-face flanged, raised-face flanged, ring-type joints. Process upset conditions must be considered as part of the assessment. Upset conditions which last for more than one or two hours may have a significant impact on pump and ancillary equipment selection.

The physical location of the pump, indoor or outdoor, will decide the behaviour of the leakage once outside the pump. Will any vapour cloud quickly disperse on a breeze which always blows over the un-manned site or will a manned enclosed pump house gradually build up a dangerous concentration of vapour? Only the user can assess these questions and specify the necessary precautions.

It is the responsibility of the user to define exactly what the pump is intended to do. It is the responsibility of the pump manufacturer to supply equipment to meet the required performance.

2.1.7.5 Useful sources of information

Basic information on plant and system design, together with risk assessment, can be obtained from various sources. See Section 2.7 for more complete information. For example the British Institution of Chemical Engineers publishes several useful texts as well as the American Institute of Chemical Engineers.

Information regarding trade names and manufacturers of dangerous chemicals is available from the UK Chemical Industries Association.

BS 5908:1990 summarises the statutory requirements, storage and movement of materials, process plant piping, ventilation, fire protection etc. This publication also lists a wide range of reference literature including: UK Health Protection Agency, American Petroleum Institute (API), American Society of Mechanical Engineers, (ASME), the now defunct US Bureau of Mines, and publications of the Oil Companies' European Organisation for environment, health & safety in refining and distribution (CONCAWE).

BS 5908 classifies substances according to the operating temperature and flash point temperature, see Table 2.3, agreeing with the UK Energy Institute.

	Flash point °C	Operating temperature °C
Class I	< 21	
Class II(1)	21 to 55	below flash point
Class II(2)	21 to 55	at or above flash point
Class III(1)	55 to 100	below flash point
Class III(2)	55 to 100	at or above flash point

Table 2.3 Classification of substances

American practice is outlined in ANSI B31.3 (Chemical Plant and Petroleum Refinery Code). The UK Health & Safety Executive also produces a wide range of literature on all aspects of safety. Work with chemical substances that are classed as hazardous to health is covered in the UK by The Control of Substances Hazardous to Health (Amendment) Regulations 2003. General advice on control measures can be found in the COSHH Approved Code of Practice. (Health & Safety Executive (HSE) Books Reference number: L5). COSHH covers the following significant areas:

Regulation 6 assessment of exposure,

Regulation 7 control of exposure,

Regulation 8 & 9 use and maintenance of control measures,

Regulation 10 monitoring exposure.

Separate regulations cover the hazards of carcinogenic substances, lead and asbestos. COSHH does not apply to underground mining installations or to the hazards posed by micro-organisms.

Another useful source of information is The European Agreement concerning the International Carriage of Dangerous Goods by Road (ADR) on 30 September 1957, under the auspices of the United Nations Economic Commission for Europe, and it entered into force on 29 January 1968.

A set of new amendments came into force on 1 January 2005, and consequently, a third consolidated "restructured" version was published as document ECE/TRANS/175, Vol.I and II ("ADR 2005").

The new structure is consistent with that of the United Nations Recommendations on the Transport of Dangerous Goods, Model Regulations, the International Maritime Dangerous Goods Code (of the International Maritime Organization), the Technical Instructions for the Safe Transport of Dangerous Goods by Air (of the International Civil Aviation Organization) and the Regulations concerning the International Carriage of Dangerous Goods by Rail (of the Intergovernmental Organisation for International Carriage by Rail).

Conditions are laid down in the UK Petroleum (Consolidation) Act 1928 and in particular The Highly Flammable Liquid and Liquefied Gases Regulations SI (Statutory Instrument) 1972 No. 917, governing the storage, handling and conveyance of gases and liquids constituting a fire hazard.

According to these regulations:

- **Highly flammable liquid** means any liquid, liquid solution, emulsion or suspension which, when tested in the manner specified in Schedule 1 to the Regulations, gives off a flammable vapour at a temperature of less than 32°C and when tested in the manner specified in Schedule 2 to the Regulations, supports combustion;
- **Dangerous concentration of vapours** means a concentration greater than the lower flammable limit of the vapours.

Fire hazardous liquids are listed in the Petroleum (inflammable Liquids) Order SI 1968 No 570 under Part 1 of the Schedule and any solution or mixture containing any of those substances specified in Part 1 of the Schedule, if it gives off an inflammable vapour at a temperature below 22.8°C.

NOTE: The Fire Hazard categories specified in the Liquid Table in Section 2.6.2 are classified according to the following:

CLASS 1 Liquids having a flash point below +21°C.

CLASS 2a Liquids with a flash point above +21°C but not exceeding +30°C.

CLASS 2b

LIBERTY EXHIBIT 1014, Page 92

This book belongs to Robert Durham (rdurham@thewaylabs.com) Copyright Elsevier 2024

Liquids with a flash point above +30°C but not exceeding +60°C.

CLASS 3 Motor fuel and heating oil with a flash point in excess of +60°C.

Below 32°C (73°F):

Abel Apparatus: Statutory Method - BS 2000: Part 33:1982 (IP 33/59(78))

-18°C to 71.5°C (0°F to 160°F):

Abel Apparatus: Non-Statutory Method - BS 2000: Part 170:1982 (= IP 170/75(81))

-7°C to 371°C:

Pensky-Martens Apparatus - BS 6664: Part 5:1990 (= IP 34/67 and = ISO 2719)

American literature can be checked for additional information. NFPA (Fire) HAZ-01 published by the US National Fire protection Association maybe useful.

ACGHI® documentation of threshold limit values for substances in workroom air is available from American Conference of Government Industrial Hygienists.

Gas constituting a fire hazard is not classified according to a flash point, the criteria being the way in which the gas can be ignited and the flame propagated. An explosive atmosphere occurs if the percentage concentration by volume of an explosive gas or vapour in air is such that the air will burn when ignited and flame propagation occurs. The upper and lower explosive limits are referred to as the explosive range or flammability limits.

Regulations governing such installations so as to reduce the risk of explosion caused by electrical equipment are laid down and certified by National bodies, European and International agreements. This aspect of hazards and safety is fully covered in Chapter 10 but some basic information is given here.

BS 5345 sets out a code of practice for selection, installation, and maintenance of electrical apparatus for use in potentially explosive atmospheres (other than mining applications or explosive processing and manufacture), gives guidance and references for all aspects of electrical installations.

European - EN 50 014 to EN 50 020, plus EN 50 028 and EN 50 039 are the relevant European standards issued by the European Committee for Electrotechnical Standardization (CENELEC) and adopted by all EU member countries. The International Electrotechnical Committee (IEC) has issued Standard IEC 79, in 18 sections for world use.

Accredited test houses check for standard compliance and issue certificates for suitable equipment. The UK, Germany and USA have the most popular test houses, see Chapter 10.

2.2 Water

2.2.1 Demineralized water

Demineralized water is chemically pure water and can be produced by various methods :

- Multiple distillation
- Multi-bed ion exchange
- Reverse osmosis
- Electro-dialysis

Chemical impurities and dissolved gases are removed which cause the water to become chemically active. At reasonable temperatures, glass and austenitic stainless steels are completely corrosion resistant. Cast iron and bronze are both attacked resulting in contamination of the water. At higher temperatures austenitic stainless steels suffer from intergranular corrosion.

Temperature°C	Dynamic viscosity μ kg/m.s			
	0.1 MPa	1 MPa	10 MPa	100 MPa
0	$1.793 \cdot 10^{-3}$	$1.789 \cdot 10^{-3}$	$1.768 \cdot 10^{-3}$	$1.651 \cdot 10^{-3}$
25	$0.891 \cdot 10^{-3}$	$0.891 \cdot 10^{-3}$	$0.889 \cdot 10^{-3}$	$0.891 \cdot 10^{-3}$
50	$0.547 \cdot 10^{-3}$	$0.547 \cdot 10^{-3}$	$0.549 \cdot 10^{-3}$	$0.568 \cdot 10^{-3}$
75	$0.377 \cdot 10^{-3}$	$0.378 \cdot 10^{-3}$	$0.380 \cdot 10^{-3}$	$0.404 \cdot 10^{-3}$
100	-	$0.282 \cdot 10^{-3}$	$0.285 \cdot 10^{-3}$	$0.300 \cdot 10^{-3}$
150	-	$0.182 \cdot 10^{-3}$	$0.185 \cdot 10^{-3}$	$0.207 \cdot 10^{-3}$
200	-	-	$0.136 \cdot 10^{-3}$	$0.156 \cdot 10^{-3}$
250	-	-	$0.108 \cdot 10^{-3}$	$0.128 \cdot 10^{-3}$
300	-	-	$0.087 \cdot 10^{-3}$	$0.110 \cdot 10^{-3}$
350	-	-	-	$0.096 \cdot 10^{-3}$

Table 2.4 Dynamic viscosity of chemically pure water at various temperatures and pressures

The hydraulic properties of demineralized water can be determined with very great accuracy. The viscosity and vapour (saturation) pressures given in Tables 2.4 to 2.7, conform to the international standard values accepted at the ICPS-8 (Eighth International Conference on Properties of Steam, 1975). The values stated for density agree with ICPS-6 (1964).

Temperature °C	Density ρ kg/m^3			
	0.1 MPa	1 MPa	10 MPa	100 MPa
0	999.8	1000.2	1004.7	1045.5
50	988.0	988.5	992.4	1027.4
100	-	958.6	962.8	1000.0
150	-	917.1	922.2	965.3
200	-	-	871.1	924.2
250	-	-	806.0	876.7
300	-	-	715.4	823.2
350	-	-	-	762.5

Table 2.5 Density of chemically pure water at various temperatures and pressures

Temperature °C	Dynamic Viscosity μ kg/m.s	Kinematic Viscosity ν m^2/s	Density kg/m^3	Remarks
-25	$5.842 \cdot 10^{-3}$	$5.889 \cdot 10^{-6}$	992.1	Super-cooled water
-20	$4.342 \cdot 10^{-3}$	$4.365 \cdot 10^{-6}$	994.7	
-15	$3.342 \cdot 10^{-3}$	$3.353 \cdot 10^{-6}$	996.7	
-10	$2.650 \cdot 10^{-3}$	$2.655 \cdot 10^{-6}$	998.3	
-5	$2.156 \cdot 10^{-3}$	$2.158 \cdot 10^{-6}$	999.3	
0	$1.793 \cdot 10^{-3}$	$1.793 \cdot 10^{-6}$	999.8	NB: All values are for a pressure of 0.1 MPa (1bar).
5	$1.518 \cdot 10^{-3}$	$1.518 \cdot 10^{-6}$	1000.0	
10	$1.306 \cdot 10^{-3}$	$1.306 \cdot 10^{-6}$	999.8	
15	$1.137 \cdot 10^{-3}$	$1.138 \cdot 10^{-6}$	999.2	
20	$1.003 \cdot 10^{-3}$	$1.005 \cdot 10^{-6}$	998.3	
25	$0.891 \cdot 10^{-3}$	$0.895 \cdot 10^{-6}$	997.2	
30	$0.798 \cdot 10^{-3}$	$0.801 \cdot 10^{-6}$	995.7	
35	$0.720 \cdot 10^{-3}$	$0.724 \cdot 10^{-6}$	994.1	
40	$0.654 \cdot 10^{-3}$	$0.659 \cdot 10^{-6}$	992.3	
50	$0.547 \cdot 10^{-3}$	$0.554 \cdot 10^{-6}$	988.0	
60	$0.466 \cdot 10^{-3}$	$0.474 \cdot 10^{-6}$	983.2	
70	$0.403 \cdot 10^{-3}$	$0.412 \cdot 10^{-6}$	997.7	
80	$0.354 \cdot 10^{-3}$	$0.364 \cdot 10^{-6}$	971.6	
90	$0.315 \cdot 10^{-3}$	$0.326 \cdot 10^{-6}$	965.2	
95	$0.298 \cdot 10^{-3}$	$0.310 \cdot 10^{-6}$	961.7	
99	$0.285 \cdot 10^{-3}$	$0.297 \cdot 10^{-6}$	958.9	

LIBERTY EXHIBIT 1014, Page 93

This book belongs to Robert Durham (rdurham@thewaylabs.com) Copyright Elsevier 2024

Table 2.6 Dynamic viscosity, kinematic viscosity and density for chemically pure water in the temperature range -25°C to 99°C and at a pressure of 0.1 Mpa (1 bar)

Temperature°C	Vapour pressure MPa	Vapour pressure, metres, column of water
0	0.00061	0.06
10	0.00127	0.13
20	0.00234	0.24
30	0.00424	0.43
40	0.00738	0.76
50	0.01234	1.27
60	0.01992	2.07
70	0.03116	3.27
80	0.04736	4.97
90	0.07011	7.41
100	0.10133	10.8
110	0.14327	15.4
120	0.19854	21.5
150	0.47600	52.9
200	1.5549	183
250	3.9776	508
300	8.5927	1229
350	16.535	2810

Table 2.7 Vapour (saturation) pressure for chemically pure water

Various characteristics of chemically pure water are shown in Table 2.8.

Melting point, ice to water	0°C at 101 kPa
Latent heat of fusion, ice to water	335 kJ/kg
Specific heat	4.182 kJ/kg K at 101 kPa and 20°C
Boiling point	100°C at 101 kPa
Latent heat of steam	2260 kJ/kg at 100°C
Coefficient of expansion g =	0.000207 per deg°C at 101 kPa and 20°C
Bulk modulus K =	2.2×10^{-9} N/m^2 at 101 kPa and 20°C

Table 2.8 Chemically pure water characteristics

2.2.2 Fresh water

2.2.2.1 General

Fresh water is the water derived from rivers, streams and wells. Generally containing less than 1% salt, sodium chloride, it can be "hard" or "soft". Hard water is high in calcium and/or magnesium salts and results in poor lather when using soap. Dissolved gases are always present, usually oxygen and carbon dioxide. The oxygen content should be about 5 mg/l.

During treatment for drinking water chlorides are added. Unless stated otherwise, fresh water is considered to be clean; this is taken as meaning no measurable concentration of solids over 10 microns. Untreated water should have micro-organisms 0.5 to 1.0 microns.

Fresh water has many uses, among other things as raw water for drinking purposes, as cooling and process water within various industries and for irrigation.

For the purposes of pumping installations, the most interesting aspect is the corrosive action of water on the commonly used construction materials:

- steel
- grey cast iron
- bronze

The characteristics of water which contribute to corrosion are:

- pH value
- hardness and carbonic acid content
- content of various chemicals, primarily salts
- acidity

Apart from these, the temperature of the water and the following factors will influence installation corrosion and wear:

- Velocity of flow; normally several m/s in pipes and 10-40 m/s in a centrifugal pump
- NPSH available and cavitation
- Content of solid bodies, e.g. sand and sludge from various sources

Not all materials are suitable for higher velocity service. Not all materials have equal cavitation resistance. If the absolute pressure of fresh water is reduced to approximately 0.4 bara the dissolved gases will start to evolve. If this occurs in a pump suction cavitation symptoms and failures may occur. Small quantities of solids can cause high wear rates and accelerated corrosion in pumps designed and selected for clean water.

Consideration should be given to the rate of corrosion. Popular pump types can be supplied with an internal corrosion allowance providing an estimated component life. It would be very difficult here to make general rules when even an insignificant quantity of salt may magnify an attack of corrosion. Water containing chlorides can be especially troublesome. The corrosive action on steel, for example, is increased by a factor of 8 at 50 mg/litre of Cl_2, which means that steel is not practicable for this purpose.

2.2.2.2 pH value and choice of material

Natural waters usually have pH values of between 4 and 8. They are divided into two main groups according to their acid content.

- **Ground water** from deep sources:— this contains very little acid and it is thus the hydrogen ion concentration which is the decisive factor in the aggressiveness of the water. It should be pointed out that iron is attacked noticeably at pH values of 6 to 7 in this low acid water.
- **Surface water**, which is acidic:— here the pH value is no absolute measure of aggressiveness although it is important to know what it is.
- **Drinking water:** — this may be low acid ground water or high acid surface water which has, furthermore, been treated chemically and filtered. Waterworks can supply the necessary information in this respect. Special conditions apply for lime-containing water, which is dealt with in the following Section.

Since pumps used for conveying fresh water are for the most part constructed of cast-iron, some general aspects are given below about the use of this material with particular reference to the pH value of the water.

- Grey cast iron may be used without any real problems within the pH range 7 to 10. If chlorides are present, it may be that cast iron is not adequate.
- Grey cast iron can often be used within the pH range 5 to 7, but the affects of those factors arising from the lower pH values can be great. Within this pH range, cast iron is superior to steel as regards resistance to corrosion. The high carbon content of grey cast-iron (3 to 4 %) means that at moderate speeds of flow the graphite, together with corrosion products, can build up an anti-corrosive film, so-called graphitization.

For pH values at which cast-iron is not resistive, bronze, steel or stainless steel has to be used. Aluminium bronze is particularly suitable for fresh water, although nickel aluminium bronze may be preferred for longer life. (See also Chapter 7, Materials).

LIBERTY EXHIBIT 1014, Page 94

This book belongs to Robert Durham (rdurham@thewaylabs.com) Copyright Elsevier 2024

Steel can be used successfully under the right conditions. High velocity areas can be coated. 11-13Cr steel is popular for boiler feed applications although stainless steel is sometimes used to protect against poor water quality control. It should be emphasised that the pH value of water can always be adjusted by suitable chemical treatment before pumping. Care must be taken to ensure any chemical treatment is performed correctly and that additional corrosion problems are not introduced.

When pumping corrosive liquids, particularly liquids supporting electrolytic cells, the correct choice of material combinations for adjacent components is critical. Materials for shafts, sleeves, bushes and wear rings must also be considered. Material properties at clearances can be varied by coating or plating one or both components.

2.2.2.3 Hardness of water

The degree of hardness of water depends upon the presence of impurities, mainly calcium (Ca) and magnesium (Mg) in the form of carbonates, although non-carbonates, for example sulphates, nitrates and chlorides, also have an affect. The quantities in which these impurities occur are a measure of the hardness of the water. Hardness can be expressed in terms of the specific substance such as calcium hardness (Ca-H), magnesium hardness (Mg-H) and so on. The total hardness comprises the sum of the individual hardnesses.

Distinction can also be made between permanent and temporary hardness. Temporary hardness consists of alkali ions bound to carbonates, and permanent hardness of alkali ions bound to non-carbonates. Temporary hardness is so called because it disappears with heating. Distribution under the various headings is according to the chemically equivalent content of alkali ions. Since the various alkaline metals have different atomic weights, the unit for hardness - 1 milli-equivalent per litre (meq/l) is defined as:

$$1\ \text{meq/l} = \frac{1\text{m mol/l}}{\text{chemical valency}} \qquad \text{Equ 2.8}$$

The hardness unit 1 meq/l corresponds to the following ion contents in mg/l:

1 meq calcium hardness	=	20.04 mg/l Ca++
1 meq magnesium hardness	=	12.16 mg/l Mg++
1 meq strontium hardness	=	43.82 mg/l Sr++
1 meq barium hardness	=	68.68 mg/l Ba++

The so-called English degree of hardness, Eng°, is expressed as the equivalent content of calcium carbonate ($CaCO_3$) per Imperial gallon of water, thus:

$$1\text{Eng}^\circ = 14.2\text{mg}\,CaCo_3\,/\,l \qquad \text{Equ 2.9}$$

For the various oxides of mineral alkaline metals:

$$1\text{Eng}^\circ = 8.0\text{mg}\,CaO\,/\,l$$
$$1\text{Eng}^\circ = 5.7\text{mg}\,MgO\,/\,l$$
$$1\text{Eng}^\circ = 14.78\text{mg}\,SrO\,/\,l$$
$$1\text{Eng}^\circ = 21.88\text{mg}\,BaO\,/\,l$$

and the relation in terms of meq/l is:

$$1\text{Eng}^\circ = 0.285(\text{meq/l})$$
$$1\text{meq/l} = 3.5(\text{Eng}^\circ)$$

It is usual in the UK to state the hardness of water in English hardness degrees. See Table 2.9.

English Hardness degrees	Classification
3	very soft
3 - 6	soft
6 - 10	medium hard
10 - 15	rather hard
15 - 24	hard
- 24	very hard

Table 2.9 English hardness degrees

Other units of concentration are used in other countries; for conversion of various hardness units, see Table 2.10.

Units	Alkali ions meq/l	German hardness degrees °dH	English hardness degrees	French hardness degrees	ppm $CACO_3$ (USA)
1 meq/l alkali ions	1.00	2.8	3.5	5.0	50.5
1 German hardness degree °dH	0.356	1.0	1.25	1.78	17.8
1 English hardness degree	0.285	0.80	1.0	1.43	14.3
1 French hardness degree	0.20	0.56	0.70	1.00	10.0
1 ppm $CACO_3$ (USA)	0.02	0.056	0.07	0.10	1.0

Table 2.10 Conversion factors for various degrees of hardness

Example:

1°dH = 1.78 French hardness degrees

1 Eng° = 0.80 German hardness degrees °dH

Soft water in general is more suitable for the majority of household tasks, than hard water. When washing, a high bicarbonate content in the water is damaging because soaps consisting of a mixture of sodium stearate and palmitate generate insoluble calcium salts of organic acids with calcium bicarbonate. Hard water always contains calcium carbonates whose solubility diminishes with increase of temperature.

That is why calcium carbonate is deposited as fur and scale in boilers, heat exchangers and other heating vessels. In order to combat the deposition of scale, which can lead to local overheating in steam boilers, soft water has to be used as a source of supply. Water intended for such applications has to be softened, or dehardened.

2.2.2.4 Carbonic acid and carbonate equilibrium

Precipitation seeping down through the ground, to become ground water, absorbs carbon dioxide (CO_2) from the air in the soil, generated there by the oxidisation of organic material or by the action of various acids on limestone. Carbon dioxide and water from carbonic acid H_2CO_3 which converts the carbonates $CaCO_3$ (limestone) and $MgCO_3$, both difficult to dissolve in water, into soluble bicarbonates $Ca(HCO_3)_2$ and $Mg(HCO_3)_2$. The latter contains some CO_2 from the original carbonate (bonded carbonic acid), and some CO_2 from the carbonic acid which converted the carbonate into bicarbonate (semi-bonded carbonic acid) (see Figure 2.8). In order to keep the bicarbonate dissolved, a certain extra amount of CO_2 is required (free attached carbonic acid).

If there is enough carbonate in the ground, and if all the CO_2 is used up in the conversion of this to bicarbonate and in keeping the bicarbonate in solution, then the water is in a state of equilibrium as regards carbonate-carbonic acid. Thus a special condition of equilibrium arises between lime and the attached free carbonic acid. If the free carbonic acid content is less than that required for equilibrium, lime is separated. If the carbonic acid content increases the lime is re-dissolved. If, on the other hand, there is a surplus of CO_2, this is called "free surplus carbonic acid" or "aggressive carbonic acid". It is this part of the carbonic acid content which usually causes corrosion.

Water without free carbonic acid, if oxygen is present at the same time, will easily generate carbon-containing protective films which prevent corrosion on exposed pump surfaces, vessels and pipes. If there is free "aggressive carbonic acid" in the

This book belongs to Robert Durham (rdurham@thewaylabs.com) Copyright Elsevier 2024

water, the build-up of the protective layer is hampered, particularly if there is a lack of oxygen. If this kind of water comes into contact with lime, concrete, treated lime or soda, the lime is dissolved until its chemical equilibrium is restored. Free carbonic acid is thus aggressive to lime.

Iron, steel and light metals are attacked by all free content of carbonic acid, so that the lower the value of pH, the greater is the speed of corrosive breakdown. Ground water often contains bicarbonates with "attached carbonic acid" and perhaps also "aggressive carbonic acid". Water containing aggressive carbonic acid can be aerated and/or dosed with a suitable alkali (lime, soda, sodium hydrate) to bond the carbonic acid and to increase the pH value. At the same time, however, it must be observed that the so-called lime-saturated pH value should not be overstepped. If that happened, troublesome precipitations might result.

For practical purposes, the pH for natural carbonated water depends almost entirely on the relationship between the "bonded" and the "free carbonic acid" and, according to Klut, is determined by the relationship:

$$pH = 6.82 + \log\left(\frac{\text{bonded } CO_2}{\text{free } CO_2}\right) \qquad \text{Equ 2.10}$$

If the equilibrium value pH is set in relation to the carbonate hardness, then relationships are obtained as shown in Figures 2.9 and 2.10. Using Figure 2.10 distinction can also be made between "attached" and "aggressive" carbonic acid.

Carbonate precipitation can cause trouble in certain assemblies in pumps, for example shaft seals and water-lubricated plain bearings.

Figures 2.9 and 2.10 can be used to measure the aggressivity of natural water when the pH value and the carbonate hardness are known. Oxygen-rich carbonated water is aggressive only when the pH value is less than the values along the equilibrium curve. In other cases, a lime protective film is built up. If the pH value is considerably below the values on the equilibrium curve, the affect of other pH reducing substances may be suspected. Corrosion is then caused by these.

In the case of waters having low oxygen content there will be no build-up of protective film. All free content of carbonic acid adds to the aggressivity of the water. The corrosion rate increases with decreasing pH value.

The oxygen content of raw water, which is so important, can vary greatly. In both spring water and ground water emanating from upper strata, the oxygen content is almost always sufficient to build up the natural lime rust-protective layer for carbonate hardnesses of 6°dH. Soft surface water, because of lack of lime, cannot build up lime rust-protective layers and is, therefore, always more or less aggressive.

2.2.3 Brackish water

Brackish water occurs at the mouths of rivers where fresh water and seawater mix. The salt and chlorides content are diluted to approximately 1 to 2.5% and 4000 ppm respectively, giving a pH range of 6 to 9. Because of the turbulent flow regime brackish water contains suspended solids, typically silt and sand. Particle sizes would range from 1 to 200 microns. The percentage of solids, and the size distribution, could only be quantified by sampling.

River water may be contaminated with industrial waste such as nitrogen compounds or caustic. Ammonia, sodium carbonate and sodium hydroxide are some of the most popular wastes. If nitrogen compounds are present, the oxygen content may be reduced due to the activity of bacteria and fungi. Small micro-organisms, as in fresh water, may be present.

Cast iron, steel and 11-13Cr steel will generally not be suitable. The presence of ammonia or caustic will cause stress corrosion cracking problems with brass. The addition of 0.25% to 4% tin to copper alloys improves corrosion resistance and resistance to stress corrosion cracking. Aluminium bronzes, with 10% aluminium, and nickel aluminium bronzes, with 4% nickel, are generally corrosion resistant. Nickel aluminium bronze has proved superior where mud or silt deposits accumulate. Austenitic stainless steels, such as AISI 316, have given adequate service on brackish water with 0.2% ammonia compounds up to 35°C. The solids content must be quantified to allow proper pump selection.

2.2.4 Seawater

Seawater is pumped continuously in two important processes; crude oil secondary recovery and desalination. Secondary recovery may require pressures up to 350 barg. Desalination, by reverse osmosis, requires only 70 barg. These two processes account for the recent developments in pump materials.

2.2.4.1 General

Seawater contains a mixture of inorganic salts. Cooking salt, sodium chloride NaCl, forms about 75% of the salt content. The salt content at great depths varies insignificantly between the oceans of the world. At a depth of 500 m the salt content is about 3.5%. At the surface, however, the salinity is affected considerably by the climatic and other factors. In the Northern Baltic, the salinity is almost 0%, and in the Red Sea it is about 4%. Evaporation, rain, polar ice, rivers and industrial/chemical effluents are all factors which affect the properties of seawater.

The temperature at the surface of the sea varies from about -2°C in the Arctic Ocean and all around Antarctica to about +37°C in the Persian Gulf. The sea bed temperature is generally between + 2°C to + 5°C. At temperatures between 10 and 15°C the oxygen content varies between 8 and 10 mg/l. Chlorides are present up to 25000 ppm. Unless polluted there is no hydrogen sulphide. Seawater properties vary throughout the year and care must be taken to establish the full range. At one location temperatures ranged from 3.3 to 27°C, pH 7.9 to 8.4, whilst oxygen varied from 72 to 100% saturation. The physical properties of seawater vary little from chemically pure water.

2.2.4.2 The qualities of seawater and corrosion

Operational experience with ships' pumps has shown that the quality of seawater is of great significance in resistance to cor-

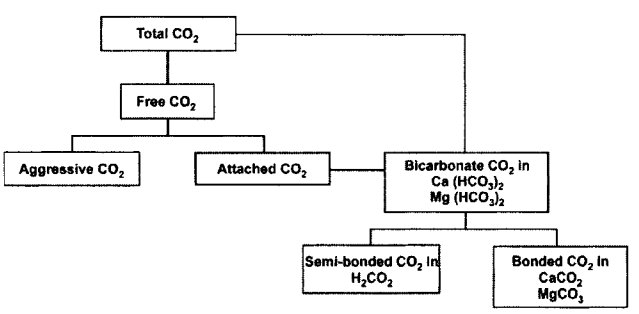

Figure 2.8 Various states for carbon dioxide (CO_2) in water

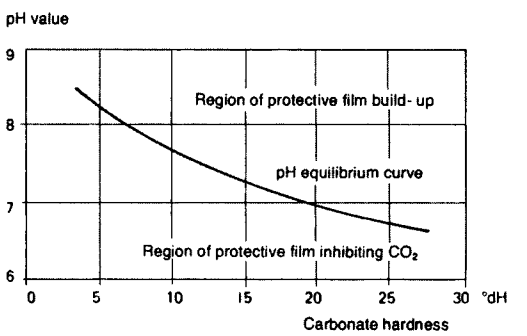

Figure 2.9 Condition of equilibrium for the creation of carbon content protective films in acidic waters

LIBERTY EXHIBIT 1014, Page 96

This book belongs to Robert Durham (rdurham@thewaylabs.com) Copyright Elsevier 2024

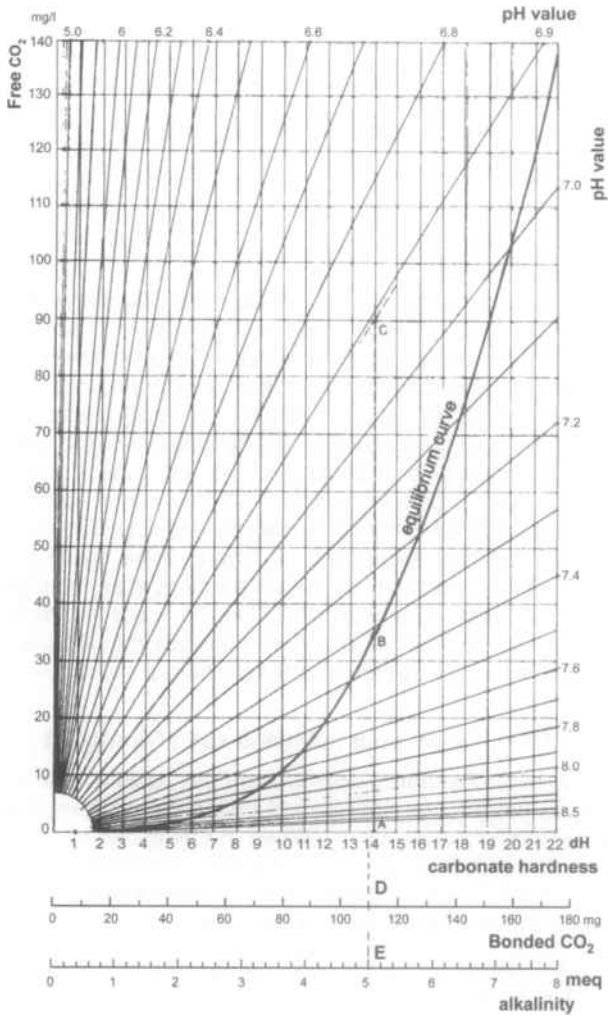

Example:

The following values are obtained after chemical analysis of raw water:

Carbonate hardness	14 °dH	(A)
Free carbonic acid	90 mg/l	(AC)
According to the nomogram:		
Free attached carbonic acid	35 mg/l	(AB)
Free aggressive carbonic acid	55 mg/l	(BC)
Bonded carbonic acid	110 mg/l	(D)
pH value	6.91	(C)
Alkalinity	5.0 meq	(E)

Figure 2.10 Carbonate hardness relative to carbonic acid content

rosion. There are examples of identical ships where the one vessel has had serious problems with its seawater pumps whilst the pumps in the sister ship have remained intact. This phenomenon has usually been explained by the fact that the ships have been plying in different types of seawater. By and large, those ships engaged in coastal and river traffic are attacked more by corrosion than are those which sail the open seas.

As regards coast-based industries and power stations, the quality of the water may vary greatly, depending upon where the installation is located. In such cases however, the quality of water to be dealt with is usually already known at the design stage, enabling the choice of pump materials to be made accordingly. This is not usually possible in the case of marine pump installations. Coastal installations and others subjected to saline atmospheres require special attention to external construction, particularly where dissimilar metals are used, to reduce the affects of galvanic corrosion. The variations in the properties of seawater and the affects these variations have on corrosion rates can be summarised as follows:

- The temperature of seawater is of relatively great importance with regard to corrosion rates. In general, higher temperatures increase the corrosion risks
- Solid contaminants damage the protective-film on the material, thus giving corrosion a chance to attack. The rate of mechanical wear can of course, also be increased
- Chemical contaminants of various types can also lead to increased rate of corrosion
- Tests have shown that oxygen contents over 1 mg/l will promote stress corrosion cracking. If pre-treatment is considered, oxygen reduction is of prime importance. The pH value of seawater is normally about 8
- The dosing of additives may perhaps be regarded as a deliberate chemical contamination of seawaters. Properly conducted, such dosing should not bring any problems from the corrosion point of view. Too strong a dose of sodium hypochlorite, sometimes used to inhibit algae, can on the other hand cause serious pitting corrosion

Summarising, it can be confirmed that clean and cold sea water with normal oxygen content gives the least corrosion problems.

2.2.4.3 Choice of materials

Care must be taken with material combinations when pumping seawater. An electrolytic cell is set up between dissimilar metals due to the high conductivity of the seawater. The less noble material should have a much larger surface area than the noble material. The problem is exacerbated by changes in the electrolytic potential caused by high flow velocities.

Steel is not very good in moving seawater; corrosion of steel increases by a factor of 4 from static to 4.5 m/s. When suitable, cast iron castings with stainless steel impellers last longer overall than nickel aluminium bronze impellers. Ni-resist and ductile ni-resist have been used for some applications; ductile ni-resist is difficult to cast and both are difficult to weld repair.

Copper alloys give good service lives in seawater and are generally easy to cast and machine. Nickel aluminium bronze can be difficult for some machining operations, like tapping. Special tools may be required. Nickel aluminium bronze and magnesium aluminium bronze are better than aluminium bronze and gunmetal. Gunmetal casings with nickel aluminium impellers have been popular. Aluminium bronze is resistant to stress corrosion cracking provided metallurgy and heat treatment are correct. Nickel aluminium bronze has exceptional resistance to cavitation damage compared to some stainless steels; BS1400 AB2 = 0.025mm; stainless steel AISI 321 = 0.305 mm in 3% NaCl. Welding of nickel aluminium bronze is possible, but heat treatment after is necessary to reduce corrosion possibilities. Aluminium and nickel aluminium bronze are limited to 18 to 25 m/s to eliminate erosion problems. Aluminium bronze can be used in combination with stainless steel and titanium without problems. Seawater piping 90/10 Cu Ni has adequate service life.

Stainless steels are the most popular materials for pumping seawater. Care must be taken when reviewing test results and when specifying materials. The chemical composition, and therefore corrosion resistance, of austenitic stainless steels varies with material production; cast AISI 316 is different to wrought AISI 316.

Ferritic steels suffer from local corrosion and pitting in seawater. Stainless steels without molybdenum are generally poor. AISI 304 is generally regarded as the lowest quality austenitic stainless steel. AISI 304 is not used for seawater. AISI 316 has proved successful in tests up to 90°C on synthetic seawater although when tested at 20°C with bubbled chlorine gas pitting occurred. The general consensus is that cast 316L casings with 316 shafts is the minimum working combination. Cast 316L has 10 to 15% ferrite and a higher chromium content than wrought 316L which has no ferrite structure.

This book belongs to Robert Durham (rdurham@thewaylabs.com)
Copyright Elsevier 2024

316L castings are as good as Alloy 20 for pitting and crevice corrosion resistance, have good stress corrosion cracking resistance and are easier to cast and weld repair. The ferrite content improves corrosion resistance and aids weldability. 316 shafts have to be designed carefully to avoid sharp corners with attendant stress concentrations resulting in stress corrosion cracking. Pitting can be a problem in the stuffing box/mechanical seal area. 316 shafts and impellers have been replaced by monel at extra cost but with no real economic benefit.

Research over a number of years tended to show that molybdenum played an important part in the corrosion resistance. An early theory suggested the Cr + Mo percentage should be over 30%.

This was followed by an Uddeholm equation for Pitting Resistance Equivalent (PRE).

$$PRE = (Cr\ weight\%) + (3.3 \times Mo\ weight\%) \qquad \text{Equ 2.11}$$

Uddeholm thought that PRE should equal 28 minimum. More research and testing. Later, nitrogen was found to have an important role in the corrosion resistance. A new equation was proposed.

$$PRE = (Cr\ weight\%) + (3.3 \times Mo\ weight\%) + (16 \times N_2\ weight\%) \qquad \text{Equ 2.12}$$

Larsen of Ingersoll-Rand suggested the PRE_N value be set at 35. Some users have requested PRE_N values of over 40. Nitrogen strengthened steels had been available since the early 70s. Now more exotic varieties were compounded. Another benefit provided by nitrogen hardened stainless steels was improved cavitation damage resistance. Table 2.11 shows the range of chromium and nickel contents of current popular materials.

Designation	Composition %	
	Cr	Ni
AISI 316	16-18	10-14
ACI CF-8M	18-21	9-12
AISI 316L	16-18	10-14
ACI CF-3M	17-21	9-13
Avesta 254SMO	20	18
Avesta 254SLX	20	25
ACI CN-7M	19-22	27.5-30.5
Rex 734	21.6	9
Armco Nitronic 50	20.5-23.5	11.5-13.5
Zeron 25	24-26	5.5-7.5
Zeron 100	24-26	6-8
Ferralium 255	24-27	4.5-6.5
Ferralium 288	26-29	6-9

Table 2.11 Popular materials for use in seawater

Some exotic stainless steels have a low tensile strength combined with high ductility. Higher pressure pumps require much thicker casings resulting in heavy pumps. More costly, stronger materials may be better resulting from thinner casings and smaller corrosion allowances. Materials, such as titanium, may cost less than proprietary stainless steels.

NOTE: Water, more exactly brine, extracted from wells in oil-fields may have up to 30% salt content, mostly sodium chloride. Oxygen content can be zero but hydrogen sulphide is often present. The pH value is normally low, about 4, and the brine reacts as a weak acid causing severe corrosion. Stainless steels containing 25% Cr and 25% Ni are typically used for these applications.

See also Chapter 7 Pump materials, for further discussions of pump materials used.

2.3 Oils

2.3.1 General

Oils are classified according to their origins:

- Mineral oils
- Animal oils
- Vegetable oils

In the context of pumps they can all be treated the same. Along with mineral oils, we can include such petroleum products as solvents, petrol, kerosene and the like, which should be considered when pumping oil stocks. When pumping oil, the upper and lower operating temperature limits, viscosity, cloud point, lowest flow (pour point), solidifying temperature and the vapour pressure should all be established. The flow capability of oils follows Newton's Law. In common with water, they have constant viscosity independent of shear rate and time. The viscosity is temperature dependent, oil flowing more easily when heated. The viscosity falls as the temperature rises. In order to assess the needs of a pump installation, the viscosity-temperature relationship must be known and the way the oil behaves with variations in operational temperatures must also be clarified.

2.3.1.1 Cloud point, pour point and solidifying point

Mineral oils transform gradually from the liquid to the solid state, as opposed to other liquids (water, for example, which has an exact freezing point). When the oil is chilled, it goes cloudy at a certain temperature because of precipitation of paraffin crystals, i.e. generation of wax. This temperature is called the **cloud point** (cold filter plugging point).

The **pour point** is reached if the temperature is further reduced. A few degrees below this temperature, the oil changes to a completely solid form, the **solidifying point**.

Because of waxing, it is considered that mineral oils can only be handled by pumping at a temperature of at least 10°C above the pour point. When considering pumping high viscosity oils with solidifying temperatures near to or above the ambient temperature (for outdoor installations for example), notice must be taken of the pour point and the installation must be designed so that the pipes and pump can be heated. Pipes which are not heated must be able to be emptied in order to prevent stoppages building up if pumping is interrupted in ambient temperatures below the lowest flow temperature. Low sulphurous heating oils have higher pour point temperatures than high sulphurous oils.

Complex petroleum products, petrol for example, have a vapour pressure range which is dependent upon the most easily flowing components. This property affects the calculation of the $NPSH_a/NPIP_a$ for the pump. Mineral oils are classed as dangerous liquids in fire hazard Class 3. Light distillates such as petrol and photogene are in fire hazard Class 1, see the Liquid Table in Section 2.6.2.

2.3.2 Viscosity

2.3.2.1 Burner oils

Low sulphur oils (max 0.8% by mass - EEC Directive 25/716/EEL) are covered by classes C, and C2 have viscosities of between 1 - 2 cSt at 37°C and together with Class D oils can be stored and handled at ambient temperatures likely to be encountered in the UK. Class E - H are residual blended oils for atomising burners and normally require preheating before atomisation.

The four lines on the chart in Figure 2.11 show average viscosity/temperature relationships for fuel of Classes E to H at the maximum viscosity allowed by the specifications. Table 2.12 gives details of the class. The approximate viscosity/tempera-

LIBERTY EXHIBIT 1014, Page 98

This book belongs to Robert Durham (rdurham@thewaylabs.com) Copyright Elsevier 2024

ture relationship for any petroleum fuel within these classes, for which viscosity at one temperature is known, can be determined by drawing through the known viscosity/temperature intersection a line parallel to those shown. From this line can be read the temperature required for any desired viscosity e.g. that specified by burner manufacturers for proper atomisation. As the temperature is lowered towards the pour point (lowest flow temperature) there is an increasing upward deviation from the viscosity indicated on the chart. This deviation is of such a magnitude that in no case shall the chart be used within 15°C of the pour point, information on which can be obtained from the suppliers. BS 2869 : 2006 may be useful in this respect.

Class of fuel	Min. temperature for storage	Min. temperature for outflow from storage and handling
E	7°C	7°C
F	20°C	27°C
G	32°C	38°C
H		(special purpose fuels)

Table 2.12 Fuel classes

2.3.2.2 Engine oils

The SAE system was devised in America and laid down by the Society of Automotive Engineers (SAE) in 1926. The Society's aims are "to develop technical information on all forms of self-propelled vehicles including automobiles, trucks and buses, off-highway equipment, aircraft, aerospace vehicles, marine, rail, and transit systems" and is usually known by the abbreviation SAE.

Lower numbers in the SAE system mean thinner oils and the letter W after the number indicates that the oil is suitable for use in winter. The SAE system is accepted and used internationally.

Below the cloud point temperature, there is no rectilinear relationship because of waxing.

Pour point: -20°C to -30°C (lower for certain special qualities).

Lowest recommended handling temperature: 10°C to 15°C above pour point.

2.3.2.3 Gearbox oils

Below the cloud point temperature, there is no rectilinear relationship, because of waxing.

Pour point: -20°C to -30°C (lower for certain special qualities).

Lowest recommended handling temperature: 10°C to 15°C above pour point.

2.3.2.4 Industrial oils

The International Organisation for Standardisation, (ISO), has developed a system of viscosity classification for lubricants for industrial use which came into use effectively from 1977. The system consists of 18 viscosity categories stated in centi-Stokes at 40°C. Each class of viscosity is identified by an ISO VG (viscosity grade) number which in general coincides with the mean value in accordance with Figure 2.14 from BS 4231:1992, ISO 3448:1992.

ISO Viscosity Class	Kinematic viscosity at 40°C Mean value	Minimum	cSt (mm2/s) Maximum
ISO VG 2	2.2	1.98	2.42
ISO VG 3	3.2	2.88	3.52
ISO VG 5	4.6	4.14	5.06
ISO VG 7	6.8	6.12	7.48
ISO VG 10	10	9.00	11.0
ISO VG 15	15	13.5	16.5
ISO VG 22	22	19.8	24.2
ISO VG 32	32	28.8	35.2
ISO VG 46	46	41.4	50.6

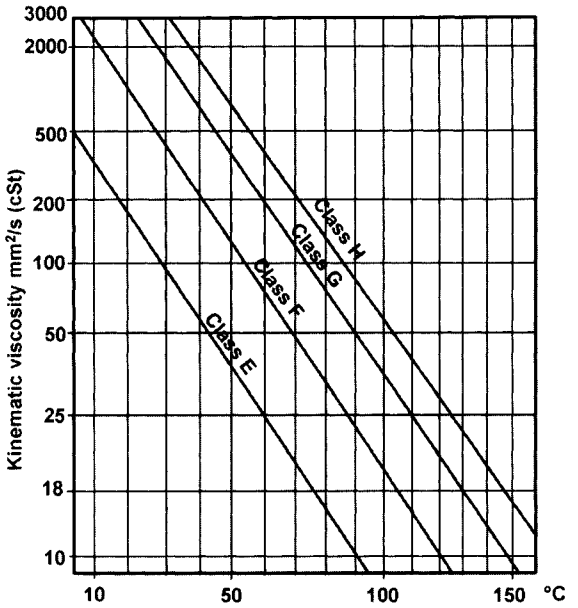

Figure 2.11 Kinematic viscosity/temperature chart

ISO Viscosity Class	Kinematic viscosity at 40°C Mean value	Minimum	cSt (mm2/s) Maximum
ISO VG 68	68	61.2	74.8
ISO VG 100	100	90.0	110.0
ISO VG 150	150	135	165
ISO VG 220	220	198	242
ISO VG 320	320	288	352
ISO VG 460	460	414	506
ISO VG 680	680	612	748
ISO VG 1000	1000	900	1100
ISO VG 1500	1500	1350	1650

Table 2.13 Viscosity classes in accordance with ISO 3448:1992, BS 4231:1992

The classification system has special advantages:

- The ISO VG number gives information on the viscosity of the oil
- ISO 3448 is fully supported by the leading national standardisation organisations such as ASTM, DIN, BSI, JIS making it easier to compare the viscosity of the oils with that specified by the machine manufacturers
- ISO 3448 is directly comparable with BS 4231:1982 for classifications at 40°C

Pour point: 20°C to 50°C (lower values for certain special qualities).

Lowest recommended handling temperature: 10°C to 15°C above pour point.

The scales in the viscosity diagrams are themselves not linear but are adjusted so that the viscosity relationships are linear. The diagram may be used to construct the viscosity relationship for other oils if the associated viscosity temperature values are known for two points. These relationships will also be linear. The Kinematic viscosity for various oils is given in Table 2.14.

Liquid	Kinematic viscosity ν mm²/s (cSt) at a given temperature	
Aviation fuel	0.7/0°C	0.6/38°C
Castor oil	300/38°C	42/54°C
Corn oil	29/38°C	9/100°C
Groundnut oil	42/38°C	23/54°C
Kerosene	2.0/20°C	1.6/38°C
Linseed oil	31/38°C	19/54°C

This book belongs to Robert Durham (rdurham@thewaylabs.com)
Copyright Elsevier 2024

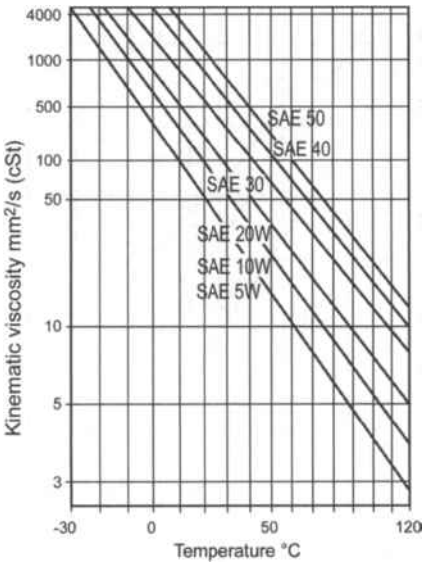

Figure 2.12 Kinematic viscosity for engine oils, SAE 5W to SAE 50

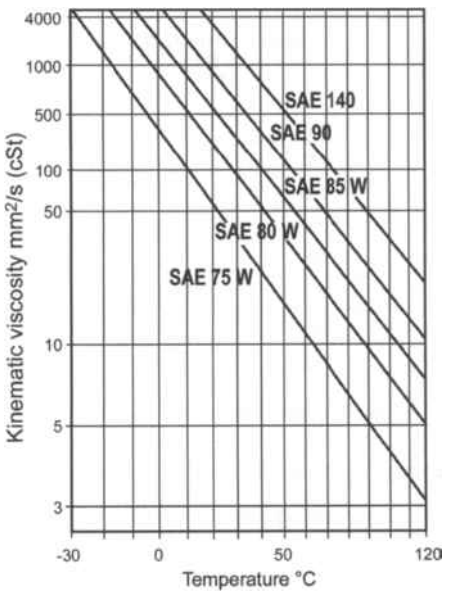

Figure 2.13 Kinematic viscosity for gearbox oils, SAE 75W to SAE 140

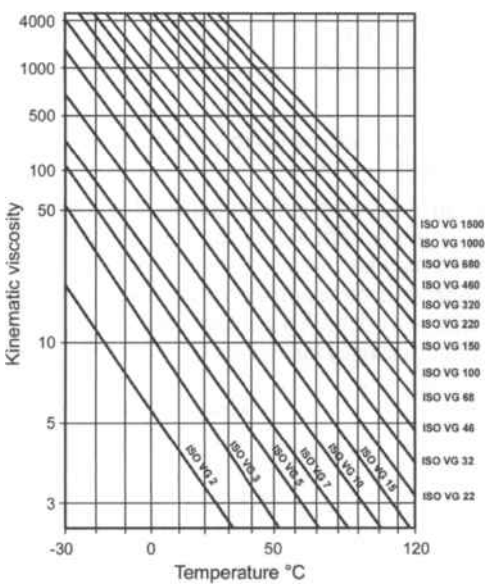

Figure 2.14 Kinematic viscosity for industrial oils in accordance with ISO 3448:1992, BS 4231:1992

Liquid	Kinematic viscosity ν mm²/s (cSt) at a given temperature	
Olive oil	43/38°C	24/54°C
Petrol	0.7/20°C	0.6/38°C
Soya oil	35/38°C	19/54°C
Turpentine	2.1/20°C	2.0/38°C
Valtran	37/38°C	22/54°C

Table 2.14 Kinematic viscosity

2.3.3.5 Other liquid data

Liquid	Density kg/m³ at 20°C	Region of boiling°C at 0.1 MPa	Vapour pressure kPa at 20°C	Fire hazard class*
Aviation fuel	720	40-150	25-35	1
Burner oils —				
BS 2869 Class D	840			3
Class E	940			3
Class F	950			3
Castor oil	960		(0)	
Corn oil	920		(0)	
Oil SAE 5W-50	900		(0)	3
Oil SAE 75W-140	910		(0)	3
Groundnut oil	910		(0)	
Oil ISO VG2-1500	880-905		(0)	3
Kerosene	780	170-250	0.1	2b
Linseed oil	930		(0)	
Liquid resin	970		(0)	
Olive oil	910		(0)	
Petrol	730	40-180	25-70	1
Soya oil	940		(0)	
Turpentine	860		(0)	2b
Valtran	920		(0)	

Table 2.15 Some liquid properties

*Refers to classification in the Liquid Table, Section 2.6.2 - See Section 2.1.7 for reference to other classifications

2.4 Liquid-solid mixtures

2.4.1 General

Particles of inorganic and organic solid matter are to be found, more or less finely distributed, suspended in liquids either as contaminants or for the purpose of transportation. Liquid-solid mixtures belong to the non-Newtonian liquids. The characteristics of the mixture depend upon:

- Pure liquid properties
- Size of the solid particles
- Density of the solid particles
- Shape, hardness and abrasiveness of the solid particles
- Deformability of the solids
- Friability of the solids
- Concentration of particles in the liquid

These parameters are of decisive importance in the choice of the pump. It is usual in pump catalogues to state the suitability of pumps for various kinds of liquids, e.g. clean, no solid contamination, slightly contaminated, contaminated, slurry, mud, transport of pulps, solids, etc. without closer definition. However, all applications for liquid-solid mixtures should be discussed in detail with pump manufacturers.

Small quantities of solids can have a serious affect on wear. Vetter, Thiel and Störk presented test results in their paper "*Reciprocating pump valve design*" for valve wear with low concen-

LIBERTY EXHIBIT 1014, Page 100

This book belongs to Robert Durham (rdurham@thewaylabs.com) Copyright Elsevier 2024

trations of 15 μm quartz with a Miller Number of 135, see Figure 2.15. These test results can be taken as representative of fine sand. A concentration by weight of only 0.25% doubled the wear rate. A concentration of 1% solids with a Miller Number of 50 in the same valves would increase valve wear by 80%.

It is helpful in pump selection to use the following parameters for the particle content of the liquid:

- Sizes <0.1, 0.1 to 1.0, 1.0 to 10 and 10 to 100 mm
- Deformable
- Abrasive
- Concentration approx. <1%, >1%

2.4.1.1 Liquid properties

The physical properties of the carrier liquid influence the properties of the liquid-solid mixture. Solids in the liquid tend to increase the viscosity. The clean liquid viscosity is necessary to evaluate the mixture viscosity. Also the abrasiveness of a mixture is affected by the liquid viscosity. Sand in oil is much less abrasive than sand in water. Solids in liquids tend to increase the relative density. Liquid relative density is required to calculate the mixture relative density.

2.4.1.2 Size of particle

Particles less than 1 μm occur in clean fresh water at very low concentrations. Solids in chemical process applications are usually small, up to 1 mm. Solids transported in liquids can vary over a wide range, dependent upon the working pressure and the choice of pump, up to 25 mm is not uncommon. Larger hard solids are encountered with dredge pumps, quarrying and building site applications.

A standard requirement is to pass a 100 mm sphere. Large soft solids, such as fruit, fish and sewage waste up to 140 mm are pumped on a regular basis. Examples of particle sizes and approximate pump capabilities are shown in Figure 2.16.

2.4.1.3 Particle density

The particle density is important for power consumption. Energy is expended moving the particles and the liquid. The power required for rotodynamic pumps is a function of the mixture density which is dependent upon the solids density.

2.4.1.4 Shape, hardness and abrasiveness

The shape of manufactured or processed solids can be defined. Naturally occurring solids may be difficult to describe. The hardness of solids can be measured and should be specified.

Because of the difficulties caused by shape, shape and hardness can be combined to give abrasiveness. Abrasiveness is quantified by testing representative samples of the mixture. The term Representative is critically important. Extrapolating data from one mixture to another is unreliable. A popular test method is the Miller Number; originally intended for reciprocating piston pumps and now standardised as ASTM G75. The test measures the weight loss of a reciprocating metal block, 28% chrome iron, due to the affect of a 50% concentration by weight in distilled water.

The Miller Number is calculated from the test results to produce a linear abrasive scale; a Miller Number of 200 produces twice as much wear as a Miller Number of 100 all other conditions being equal. Miller Numbers less than 50 are considered non abrasive; over 50 consideration should be given to wear problems. Table 2.16 indicates typical values of Miller Number.

Solid	Minimum values	Maximum values
Bauxite	9	134
Coal	6	57

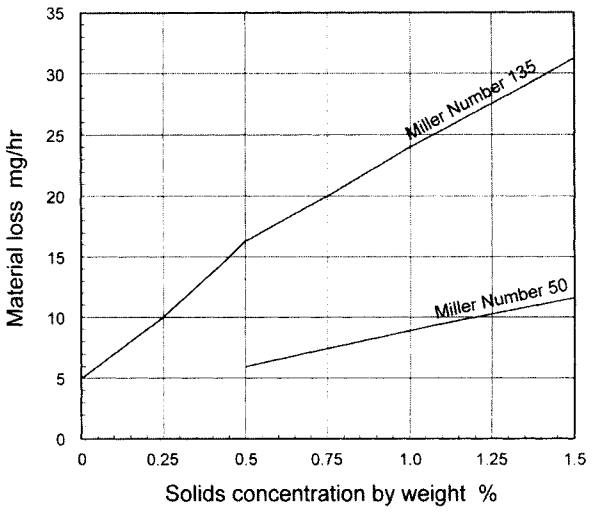

Figure 2.15 Valve material loss

Solid	Minimum values	Maximum values
Copper ore	20	135
Iron ore	28	157
Limestone	22	46
Magnetite	64	134
Mud, drilling	10	10
Sand	51	246
Sewage (digested)	15	15
Sewage (raw)	25	25
Shale	53	59
Tailings	24	644

Table 2.16 Typical Miller Number Values

2.4.1.5 Deformable particles

Particles of organic matter, soft, fibrous particles which can be compressed, deformed or may be subject to damage. For example, dispersions of plastic or natural rubber in water - latex. Latex can coagulate under pressure and therefore requires careful pumping. Other soft solids — fruit, vegetables and fish can be pumped with minimum damage by correct pump selection.

2.4.1.6 Friable particles

Friable means easily crushed or easily broken. Hard solids, like some coals, can be crushed or broken when trapped by certain pump components. Friable solids can be handled by gear pumps, some screw pumps and reciprocating pumps with valves.

2.4.1.7 Solids concentration

Concentration refers to the quantity of particles in suspension (dry substance = DS content) and is expressed as a percentage by weight or volume. Equations 2.13 to 2.16 show the volumetric relationships between liquid, particles and mixture. Equations 2.17 to 2.20 show the mass relationships.

$$\rho_M = \rho_L + \frac{C_V\,(\rho_s - \rho_L)}{100} \qquad \text{Equ 2.13}$$

$$C_V = \frac{100\,(\rho_M - \rho_L)}{(\rho_S - \rho_L)} \qquad \text{Equ 2.14}$$

$$\rho_L = \frac{\left(\rho_M - \frac{C_V\,\rho_S}{100}\right)}{\left(1 - \frac{C_V}{100}\right)} \qquad \text{Equ 2.15}$$

$$\rho_S = \frac{100}{C_V}\left(\rho_M - \rho_L + \frac{C_V\rho_L}{100}\right) \qquad \text{Equ 2.16}$$

This book belongs to Robert Durham (rdurham@thewaylabs.com)
Copyright Elsevier 2024

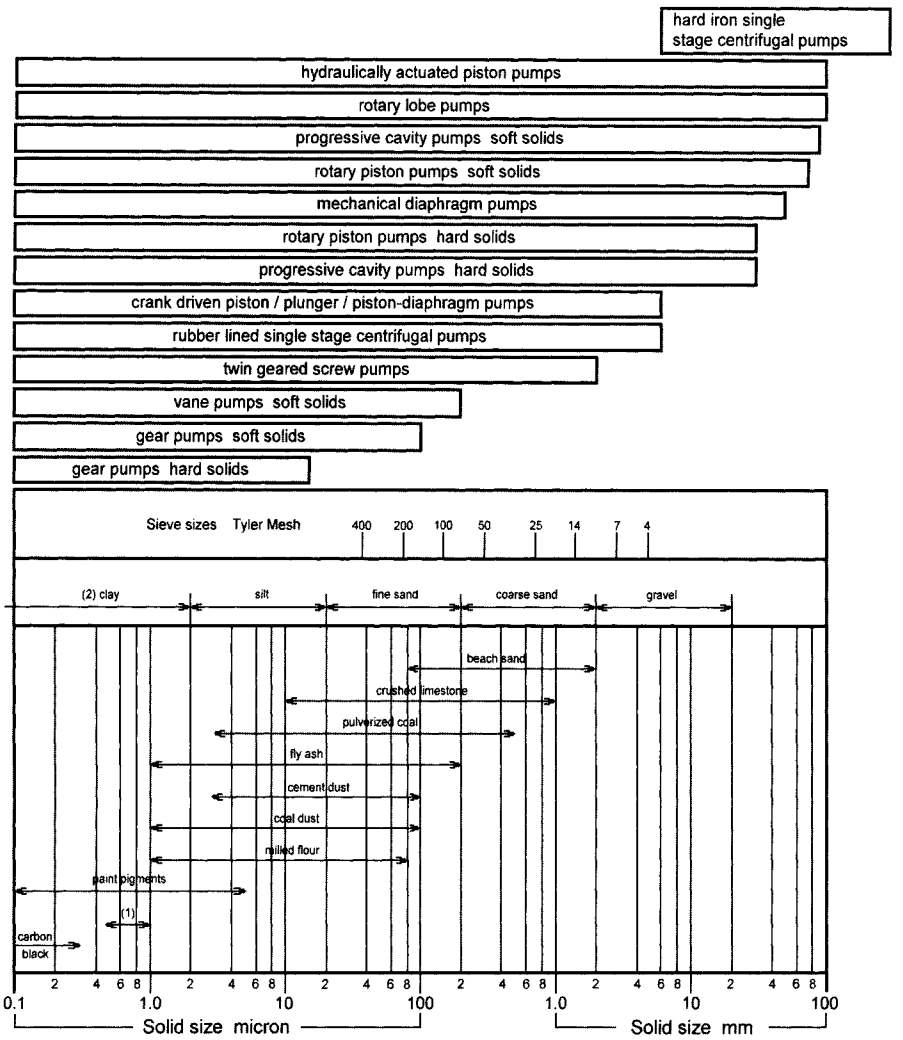

(1) micro-organisms in fresh water
(2) designation of the International Society for Soil Science

Figure 2.16 Particle sizes and pump capabilities

$$\rho_M = \frac{1}{\left(\frac{C_M}{100\rho_S} + \frac{1}{\rho_L} - \frac{C_M}{100\rho_L}\right)} \qquad \text{Equ 2.17}$$

$$C_M = \frac{\left(1 - \frac{\rho_M}{r_L}\right)}{\left(\frac{\rho_M}{100\rho_S} - \frac{\rho_M}{100\rho_L}\right)} \qquad \text{Equ 2.18}$$

$$\rho_L = \frac{\left(1 - \frac{C_M}{100}\right)}{\left(\frac{1}{\rho_M} - \frac{C_M}{100\rho_S}\right)} \qquad \text{Equ 2.19}$$

$$\frac{1}{\rho_S} = \frac{100}{C_M}\left(\frac{1}{\rho_M} - \frac{1}{\rho_L} + \frac{C_M}{100\rho_L}\right) \qquad \text{Equ 2.20}$$

where:

C_M = percentage of solids in mixture by weight

C_V = percentage of solids in mixture by volume

ρ_L = density of liquid kg/m^3

ρ_M = density of mixture kg/m^3

ρ_S = density of solids kg/m^3

The relationship between C_M and C_V is given by :

$$\frac{\rho_L C_M}{\rho_S} + \frac{C_M C_V}{50} + \frac{C_V \rho_S}{\rho_L} - \frac{C_M C_V \rho_S}{100\rho_L} - \frac{C_M C_V r_L}{100\rho_S} - C_M - C_V = 0 \qquad \text{Equ 2.21}$$

Figure 2.17 shows a nomogram for estimating the mixture density when the carrier liquid is water.

The example shows that a suspension having a particle content of 40% by weight and a particle density of 2,700 has a total density of about 1,340.

Table 2.17 indicates typical values of solids concentration found in some pump applications.

Pumped mixture	Solids concentration by weight %
Polluted municipal sewage water	0.1
Paper pulp in rotodynamic pumps	0.5 to 6
In dense pulp pumps	6.0 to 20
Centrifuged sewage	up to 35
Copper concentrate pipeline	up to 45
Coal pipeline traditional	13 to 50
Activated sewage sludge	20 to 50
Carbonation slurry	50 to 60
Limestone slurry	50 to 60
Iron ore slurry	20 to 65
Coal water fuel	up to 75

LIBERTY EXHIBIT 1014, Page 102

This book belongs to Robert Durham (rdurham@thewaylabs.com) Copyright Elsevier 2024

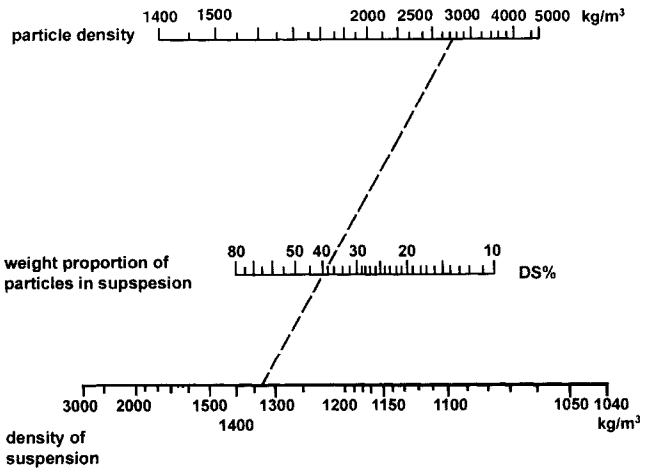

Figure 2.17 Mixture density nomogram for water

Sand	20 to 75
Clay, raw cement sludge	50 to 75
Mine backfill slime	up to 78

Table 2.17 Solids content in pumped mixtures

It is not possible to generalise the effect of solids concentration on pump selection, performance or component life. When solids are known to be present the pump selection should be fully discussed with manufacturers. Figure 2.16 indicates the maximum solid size handling capabilities of various pump types ignoring concentration. Small particles, up to 40 μm, can be pumped at 65% by weight in water and look like watery toothpaste. Solids concentrations of 80% look like toothpaste. Small solids can be pumped at high concentrations. Large solids must be pumped at low concentrations.

2.4.1.8 Velocity

One important aspect of solids handling has not been mentioned, velocity. Abrasive solids, and large solids, are pumped at much lower velocities than clean liquids.

Experience has shown that abrasive wear in pumps is related to flow velocity raised to a power between 2.5 and 5 depending upon the component. If the velocity is increased by 10% the wear rate will increase by a minimum of 27% up to 61%. The velocity-wear relationship can be used with the Miller Number to estimate the effects of duty changes.

Example:

Consider a piston pump operating at 50 rpm on drilling mud and having a valve seat life of 5000 hours. If the pump speed was increased to 75 rpm the predicted seat life would be 660 to 1800 hours. If the pump was operated at 50 rpm on mine tailings the predicted life would be 80 to 2000 hours. If the pump operated at 40 rpm on tailings then predicted seat life would be 130 to 6300 hours.

2.4.2 Sewage

Sewage is a generic term for:-

- **Soil sewage**: discharge from water-closets, urinals, slop-sinks including waste water from domestic baths etc. and even industrial effluent.
- **Surface water**: rainfall and storm water.
- **Drain water**: drainage from building sites, fields, leaks in broken pipes etc.

Waste water from households, businesses, hotels, offices and restaurants serves as a carrier for the contaminants from water closets and other sources of waste in the sewage system. The size of the waste thereafter is limited in principle to the area of the intake connected to the pipeline. It is not easy to define the limits of length of a soft and flexible objects. These objects, such as sheets of plastic, sanitary towels, etc., pass unchecked down the water closet and into the public sewer.

It is forbidden to discharge into any open drain or sewer, material which is likely to cause damage, create a hazard or which could have a prejudicial effect upon the treatment of their contents (i.e. waste matter which should be dealt with by commercial waste disposal companies). Such waste could be dirty engine oil, volatile liquids producing flammable or toxic vapour or biological waste. The legal regulations applying to local sewage works are enforced by the local water authorities supervised by government bodies such as river authorities and environmental protection agencies.

The quantity of unwanted or prohibited objects collected at rain water and sewage grills continues to increase. Especially difficult, and containing a high content of textile matter amongst others, is the sewage from densely populated city centres. The heart of the city with its restaurants, offices and department stores presents a far greater sewage problem than do the surrounding dormitory suburbs.

The demand on pumps and other means of transporting the daily sewage should be assessed according to the contaminants (permitted or not) which are contained in the sewage. The larger contaminants can be classified as deformable according to Chapter 15, thus requiring a non-clogging (chokeless) design. Different types of industry produces varying types of effluent which often contains substances which can cause damage to the sewage treatment works and the recipient water installation.

In the UK the law regarding the discharge of industrial waste into sewers is restricted by the Public Health (Drainage of Premises) Act 1937, amended in 1961. The responsibility for administering and enforcing this legislation is in the hands of the water authorities. Provisions for the restriction of pollution of tidal waters and estuaries appear in sections 2-5 of the Rivers (Prevention of Pollution) Act 1951 and amended by the 1961 Act. The Clean Rivers (Estuaries and Tidal Waters) Act 1960 also applies with limitations specified in the Schedule to the Act 1960.

The UK Control of Pollution Act 1974 sections 43 and 44 extends legislation with respect to specific pollutants. Limiting values for the discharge of substances which are toxic, corrosive, explosive and/or damaging to pump and system materials etc. are the subject of consent which must be obtained from the local water authority. (Many of these liquids appear in the Liquid tables in Section 2.6.2). Cooling water, surface water and drain water display properties as in Section 2.2. Solid precipitations from the circulating water can accumulate in cooling tower installations in the form of lime furring, sludge and concentrations of minerals giving rise to corrosion, hot spots and blockage in pumps and piping.

2.4.3 Sludge

Sludge is the name given to the residue which forms when inorganic and organic particles are separated when a liquid is cleaned. The following mechanical and chemical cleaning methods are used:

- **Sedimentation-settling**: particles fall to the bottom in a separator under their own weight;
- **Flotation**: particles are made to float by the injection of small air bubbles;
- **Centrifuging**: particles are separated by centrifugal force;
- **Filtering**: liquid is passed through a filter which allows the liquid to pass through whilst trapping the particles, the filter may consist of a grill, porous material or one or more beds of filtering media;

This book belongs to Robert Durham (rdurham@thewaylabs.com) Copyright Elsevier 2024

- **Precipitation-flocculation**: by the addition of chemical reagents, the particles form insoluble combinations -flocs- which can be separated by sedimentation or flotation.

When pumping, the dry solids (DS) content-value - or pumpability - of the sludge, is of interest as is also the size and hardness of the particles. Since sludge always occurs in the treatment of water and in industrial processes, there can be no general definition. The values obtained in the treatment of sludge in municipal sewage works can be used however as a guide. See Table 2.18.

	DS-content%
Before thickening	
Chemical sludge (scum) after precipitation or flotation	0.5 to 1
Mechanical sludge, sedimentation or flotation	2 to 3
After thickening	
Mechanically agitated sludge	6 to 10
Activated sludge	2 to 3
Bio-filtration	4 to 8
Mechanical and activated sludge	5 to 8
After straining	
In the centrifuge, filter screen press, vacuum filtering etc.	> 30

Table 2.18 DS-content after various treatment stages

In the bottom, or compression zone, of sedimentation basins, sand traps, oil tanks and other containers of stationary liquids, the bottom layer, during sedimentation is subjected to mechanical pressure due to the weight of sludge lying above it. This causes liquid to be compressed out of the bottom layer thus increasing its density. Other names given to sludge are sediment and slurry.

2.4.4 Pulps

2.4.4.1 General

Pulps are used in the cellulose and paper industries. It is a name for fibre suspensions in water. Pulps belong to the non-Newtonian liquids; group 1, the time-independent, plastic liquids.

The density of a pulp can be calculated from equations 2.13 and 2.17 with reservation for possible air content. Often the effects of the fibres and air cancel each other out. The density then coincides with that of the water.

Pulps exhibit widely varying pH values, depending on the production method and the bleaching process. Pumps made of stainless steel are usually needed.

2.4.4.2 Pulp quality

The pumping characteristics of pulp depends, in the first instance, upon the raw material used, the additives and the method of production. Examples of raw materials used are coniferous (soft) wood (fibre length 3 to 4 mm), deciduous (hard) wood (fibre length 1 to 1.5 mm) and rag (fibre length 25 to 30 mm). Basically the methods of production can be divided into chemical and mechanical methods. The chemical method is most common. Sulphate and sulphite pulps are produced both bleached and unbleached. The most important pulp to be produced mechanically is groundwood pulp.

Aside from the concentration - the dry solids (DS) content - the flow characteristics of the pulp are also affected by the fibre ratio - length/diameter and the degree of pulverisation. An illustration of the fluidity of paper pulp is shown in Figure 2.18. The percentage figures given indicate the DS-content.

2.4.4.3 Air content in pulp

Pulp differs from many other suspensions in that it consists of three phases; water, solid-fibre and air.

Air in the pulp occurs either in the form of bubbles or in a combination. Air occurs as bubbles either in a free form or attached to the fibre. Air in the combined form occurs in solution in the water or absorbed in the fibre. The content of air in the pulp depends upon; quality, concentration, additives, pulverisation, temperature and time; and also the pulp handling process. Groundwood pulp contains more air than sulphate or sulphite pulp. Better sizing increases the air content considerably as does pulverising.

An increase in temperature increases the content of free air whilst the ability of air to dissolve in water decreases. Generally speaking, the air content of pulp reduces in storage. The air content of pulp increases quickly to a certain level specific to each type of pulp when mixed with air. This happens typically when the pulp is allowed to fall freely into a vessel or cistern. Air can also be taken up by the pulp at shaft seals in pumps if there is a vacuum.

2.4.4.4 Pulp properties which complicate pumping

- **Content of solid particles**: — The pulp fibres build up a network, the density of which increases with increased concentration. It is relatively difficult to get a high concentration pulp moving, since when high energy pulses are transmitted locally in the network, it is probable that the pulp will break up and movement will take place only locally.
- **Air content**: — Air in the form of bubbles in the pulp is very inconvenient from the point of view of pumping. An air content of only 1% to 2% is enough to change the pumping characteristics.
- **Pressure drop**: — For flow at low speeds the pressure drop for pulp is much higher than for water. In general, pulp which is hot or which contains additives is easier to pump than pure, cold pulp. It can be somewhat of a problem to get pulp moving again in a pipe system after a shut-down, especially in the case of high-concentration pulp. This is because the starting resistance, "stiction", is greater than the pressure drop at low flow speeds. Dilution with water in the pump can assist restarting.
- **Blockage characteristics**: — Flocculation of the pulp, sticks, twigs and synthetic fibre, can cause blockage in the pump. A total blockage of both pump and pipe is not an unknown occurrence.
- **The tendency to thicken in reducing sections**:— Rapidly reducing conical sections on the suction side of the pump, e.g. reduction in the suction pipe from 400 mm to 150 mm, can cause flocculation at concentrations of only 3 to 4%.

2.5 Liquid-gas mixtures

2.5.1 General

Pumping liquid-gas mixtures covers areas such as:

- Small oil and gas wells
- Boiler feed pumps
- Aircraft fuel systems
- Chemical, pharmaceutical and food processing

Small oil and gas wells: Especially offshore, where it may not be economic to lay two pipelines; one for crude oil and one for natural gas or fit pumps and compressors with associated drivers and controls.

Boiler feed pumps: Generally high speed multi-stage centrifugal pumps operating with small NPSH margins. Process upsets initiating cavitation, can cause severe costly damage, resulting in unscheduled shut-downs.

LIBERTY EXHIBIT 1014, Page 104

This book belongs to Robert Durham (rdurham@thewaylabs.com) Copyright Elsevier 2024

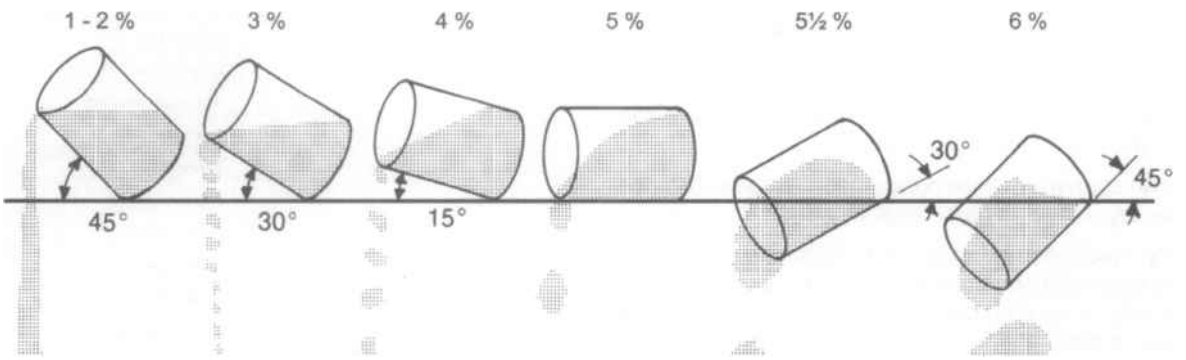

Figure 2.18 Illustration of fluidity of paper pulp

Aircraft fuel systems: Prone to air entrainment due to manoeuvring. Loss of fuel pressure and reduced flow rates can be disastrous.

Chemical, pharmaceutical and food processing operations: The handling of gas and liquids together are seen as a process simplification resulting in cost savings.

2.5.2 Useful observations

As with all pumping processes the pump manufacturer requires all the operating data to be able to assess the application. Detailed information regarding the nature of the gas, or liquid vapour, is essential. Also, details of the gas flow; steady state controlled percentage or variations from bubbles to slugs.

Users hoped it would be possible to use centrifugal pumps to handle the mixture without pre-treatment. Centrifugal pumps were the first choice equipment because of reliability and familiarity. However tests indicated that 2 to 4% gas content seriously affected pump performance and increasing gas content to 15% caused pumps to lose their prime. Development since 1989 has not significantly improved gas handling characteristics. Current configurations consist of an efficient in-line separator feeding liquid to a centrifugal pump and the gas to a compressor; both discharging into a single pipeline. This arrangement is reported to cope with 40% gas by volume. Flow controls on both machines are necessary for gas content variations.

Multi-stage axial pumps have proved successful in declining reservoir oil-field applications. Pumps have coped with 88% gas by volume with occasional slugs of 100% gas. Currently differential pressures are limited to 14 bar and inlet flows up to 500 m^3/h can be accommodated.

Progressing cavity pumps and vane pumps are both reported as running satisfactorily with liquid gas mixtures; neither suitable for 100% gas. It may be possible for diaphragm pumps or hydraulically operated piston pumps to be useful in this service.

Great success has been achieved with specially adapted geared twin screw pumps. Pumps are available which can handle gas volume fraction from 0 to 97%; dry running on 100% gas is not yet possible. Pumps are available for differential pressures of 48 bar; 69 bar in certain applications. Discharge pressures up to 153 barg are possible. Mechanical seal problems are avoided by fitting double seals with a lubricating/cooling barrier liquid.

Positive displacement pumps have the advantage in being able to cope with varying differential pressures, due to downstream friction loss changes, without substantial flow changes.

2.6 Table of liquid properties

2.6.1 Introduction

The Liquid Table in Section 2.6.2 gives useful data for pump applications. The characteristics of liquids are not given to that degree of accuracy which, in special cases, may be required in order to specify other process equipment.

Note: The most common liquids, water, oils and certain suspensions; are dealt with in more detail in Sections 2.2, 2.3 and 2.4.

Compressibility and wave speed are not included in the Table. These characteristics are stated for a number of liquids in Section 2.1.5.

The Liquid Table contains the following data:

- **Substance:** the liquid properties are arranged in alphabetical order according to the name of the substance. The trade names with synonyms are given in Table 2.19. The letter D indicates a dangerous (flammable or otherwise hazardous) liquid within the terms of the UK Petroleum (Inflammable liquids and Other Dangerous Substances) Order 1947 - Amended 1968 SI 570. The letter T indicates a high level of toxicity.
- **Chemical formula:** for identification of substance. In practice a substance unfortunately can not be assigned to a single formula because of contamination. Liquids containing contaminants which are insoluble or solid have the worst pumping characteristics, often causing troublesome wear on pumps and shaft seals.
- **Solubility in H_2O:** attention is drawn in the Liquid Table to various diagrams referring to the solubility of the substance in water. The solubility is expressed as a concentration in percentage by weight at varying temperatures. When pumping, precipitation often occurs when the concentration exceeds that stated by the solubility curve for the given temperature. Conversely, there will be precipitation if the temperature drops below the stated solubility temperature.
- **Viscosity:** is stated in mm^2/s (cSt) at +20°C. Viscosity below $5mm^2/s$ indicates that the liquid is easy flowing like water. Viscosity below $1mm^2/s$ indicates that the liquid has poor lubrication qualities and poor frictional dampening properties for acoustic and pressure waves. The Table also refers to diagrams showing dependence of viscosity on temperature. The viscosity will also be used for the determination of frictional losses in the pipework. This depends primarily on whether the flow is laminar or turbulent, see Chapter 3. In the laminar region, the pipe frictional losses are proportional to the viscosity, whereas its effect can be neglected in the turbulent region for the internal roughness of pipes which occur in practice.

  Certain liquids are non-Newtonian and require special care when determining the equivalent (apparent) viscosity.
- **Vapour pressure (absolute):** is stated in kiloPascals (kPa) at +20°C. See curves in Figure 2.21 which show the temperature dependence of vapour pressure. Note that boiling point at atmospheric pressure (101.325 kPa 760 mm Hg) gives another point on the vapour pressure curve. The

This book belongs to Robert Durham (rdurham@thewaylabs.com) Copyright Elsevier 2024

curves in Figure 2.21 are set out schematically and may deviate from the exact values. This is especially applicable to aqueous solutions - curve 13. All references to this curve apply to chemicals in solution in water. Liquid pressure near to the vapour pressure at the actual liquid temperature can cause cavitation in a pump or pipe.

- **Concentration in H_2O:** the concentration of the substance in water expressed as percentage by weight.
- **Density:** is stated in kg/m^3 at +25°C. Reference is made to various figures for other temperatures and concentrations. The density is used among other things for conversion of pressure to head and for the calculation of the power required for the pump.
- **pH region:** is an expression of acidity or alkalinity and is grouped within pH regions 0 - 4, 4 - 6, 6 - 9 and 9 - 14. This group classification assists in the choice of pump material, the pH regions coinciding with commonly used pump material resistivity to corrosion.
- **Melting point:** note that many contaminants gradually begin to degrade at temperatures immediately above the melting point which can have a harmful effect on the function of the pump.
- **Fire hazard class** stated in accordance with Section 2.1.7.

NOTE: Where there is no information in the Liquid Table, this means that the actual liquid property is not known and it does not mean that the information omitted is of no general interest in pumping.

Substance	Entered in table as
Acetic ether	Ethylacetate
Alcohol	Ethyl alcohol
Alum	Aluminium sulphate
Ammonium hydroxide	Ammoniac
Benzol	Benzene
Black liquor	Sulphate liquor
Bromite	Silver bromide
Butanol	Butyl alcohol
Carbitol	Ethyldiglycol
Caustic soda	Sodium hydroxide
Cellosolve	Sodium chloride
Cellosolve acetate	Ethylglycolacetate
Chlorhydric acid	Hydrochloric acid
Chloroacetic acid	Monochloroacetic acid
Chlorobenzene	Monochlorobenzene
Chrome alum	Potassium chrome sulphate
Chrome oxide	Chromic acid
Cooking salt	Sodium chloride
Copper vitriol	Copper sulphate
Cyancalium	Potassium cyanide
Dichloromethane	Methylene chloride
Diethylether	Ether
Dphonylether	Diphenyl oxide
Ethanol	Ethyl alcohol
Ferrichloride	Iron (III) chloride
Ferrosulphate	Iron (II) sulphate
Fixerbad	Sodium tiosulphate
Formaline	Formaldehyde
Fumaric acid	Malein acid
Glauber salt	Sodium sulphate
Hartshorn salt	Ammonium carbonate
Hydrofluoric acid	Hydrofluoric acid
Methanol	Methyl alcohol
Methylaldehyde	Formaldehyde
Naphthalene chloride	Chloronaphthalone
Natron saltpetre	Sodium nitrate
Oleic acid	Fatty acid
Palmitic acid	Fatty acid
Perhydrol	Hydrogen peroxide
Phenol	Carbolic acid
Potash	Potassium carbonate
Potash nitrate	Potassium nitrate
Potash salts	Potassium hydroxide
Pulping liquor	Calcium bisulphite liquor
Radical vinegar	Concentrated acetic acid
Sal ammoniac	Ammonium chloride
Saltlake	Sodium chloride
Slaked lime	Calcium hydroxide
Soda	Sodium carbonate
Soda lye	Sodium hydroxide
Sodium borate	Borax
Styrol	Styrene
Sublimate	Chloride of mercury
Sulphite liquor	Calcium bisulphite
Tannin	Tannic acid
Trichloroethanyl	Chloral
Urea	Carbamide
Water glass	Sodium silicate

Table 2.19 Trade names and synonyms used in the Liquid Table

LIBERTY EXHIBIT 1014, Page 106

This book belongs to Robert Durham (rdurham@thewaylabs.com) Copyright Elsevier 2024

Substance		Chemical formula	Viscosity mm^2/s at 20 °C	Vapour pressure kPa at 20 °C	Vapour pressure kPa at various temps. See Fig 2.21 curve no.	Conc. % in H_2O	Density at 25 °C	Density at various temps. See Fig no.	Density at various conc. See Fig no.	pH/ region	Boiling point °C at 101.3 kPa (760 mm Hg)	Melting point °C	Fire hazard class- See Section 2.1.7	Solubility in H_2O at various temps. See Fig no.	Comments
Abietinic acid		$C_{20}H_{30}O_2$										172			
Acetaldehyde	D	CH_3CHO	< 1	100	10		780/20°C	2.22			21	-125	1		
Acetic acid	D	CH_3COOH	1.2	3.5	19		1050	2.22	2.24	0 - 4	119		2b		
					19	5-100				0 - 4					
					19	50	1060			0 - 4					
Acetic acid anhydride	D	$(CH_3CO)_2O$			20		1080			0 - 4	136	- 73			
Acetone	D	CH_3COCH_3	< 1	30	14		790	2.22			57	- 95	1		E-mod and speed of sound - Table 2.1
Acetyl chloride		CH_3COCl					1100				51	- 112	1		
Alkyd solution in paint naphtha			Fig 2.19				900				150		2b		Non-Newtonian - Figure 2.19
Alkyd solution in xylene	D		Fig 2.19	0.9			1000				139		2a		Non-Newtonian - Figure 2.19
Alkyd tixotrope sol. in paint naphtha			Fig 2.19				900				150		2b		Non-Newtonian - Figure 2.19
Allyl alcohol	D	CH_2CHCH_2OH		2.3			850				97		1		
Ally chloride	D	CH_2CHCH_2CL	<1				940				45		1		
Aluminium		Al					2700					660			
Aluminium chloride		$AlCl_3$	< 5	2.2	13	5	1030		2.25	0 - 4				2.28	
				2.2		10	1090			0 - 4					
Aluminium nitrate		$Al(NO_3)_3$		2.2		10	1050		2.25	0 - 4				2.28	
Aluminium sulphate		$Al_2(SO_4)_3$		2.2	13	10	1110		2.23	0 - 4				2.28	
Ammonium alum		$NH_4Al(SO_4)_2$				10	1050			0 - 4					
Ammonium bromide		NH_4Br			13	5	1030		2.25	4 - 9					
Ammonium carbonate		$(NH_4)_2CO_3$			13										
				2.2	13	10	1030			4 - 6					
Ammonium chloride		NH_4Cl			13	10 - 50				4 - 6					
				1.8		26	1070		2.25	4 - 6					
Ammonium fluoride		NH_4F		2.3		6	1030								
				2.2		14	1060			9 - 14					
Ammonium hydroxide		NH_4OH	< 5		1			2.22		9 - 14					
			< 5	9.3		10	960			9 - 14					
			< 5	34.5		25	910								
Ammonium nitrate		NH_4NO_3			13	10 - 20			2.25	6 - 9					
				2.2	13	10	1040			6 - 9					
				0.5	13	60	1230			6 - 9					
Ammonium oxalate		$(COONH_4)_2H_2O$			13	30	1040			6 - 9					
Ammonium perchlorate		NH_4ClO_4				10	1040			6 - 9				2.28	
Ammonium persulphate		$(NH_4)_2S_2O_8$				10	1060			4 - 6					
Ammonium sulphate		$(NH_4)_2SO_4$				0 - conc			2.25	4 - 6				2.28	
				2.2		10	1060			4 - 6					
				0.7		50	1280			4 - 6					
Amyl acetate		$CH_3COOC_5H_{11}$	< 5	0.7	20		880				149	- 78	2b		
Amyl alcohol		$C_5H_{11}OH$	6				810				133	- 78	2b		
Amyl chloride		$C_5H_{11}Cl$					890				109		1		
Amyl polycaptan		$C_5H_{11}SH$					850				100				
Aniline	D	$C_6H_5NH_2$	6	0.1	24		1020	2.22			184	- 6	3		
Aniline hydrochloride		$C_6H_5NH_2HCl$				5				0 - 4					
Antimony		Sb				20	1090			0 - 4		630			
Anthracene oil		$C_{14}H_{10}$					1250				226				
Arsenic acid		H_3AsO_4					2500		2.24						
						10	1070			0 - 4					
Asphalt solution in naphtha			1500 - 7500				900				150		2b		Non-Newtonian
Aviation fuel			< 1	25			720				40		1		Tables - 2.1, 2.14, 2.15
Barium chloride		$BaCl_2$		2.2	13	10	1090		2.26					2.28	
				1.8		26	1280			6 - 9					
Beer					13		1010			4 - 6	100				
Benzene	T	C_6H_6	< 1	13	16		880	2.22			80	5.5	1		
Benzene sulphonic acid		$C_6H_5SO_3H$										525			
Benzoic acid		C_6H_5COOH					1270				250	122			

LIBERTY EXHIBIT 1014, Page 107

This book belongs to Robert Durham (rdurham@thewaylabs.com)

Copyright Elsevier 2024

Substance		Chemical formula	Viscosity mm^2/s at 20 °C	Vapour pressure kPa at 20 °C	Vapour pressure kPa at various temps. See Fig 2.21 curve no.	Conc. % in H_2O	Density at 25 °C	Density at various temps. See Fig no.	Density at various conc. See Fig no.	pH/ region	Boiling point °C at 101.3 kPa (760 mm Hg)	Melting point °C	Fire hazard class- See Section 2.1.7	Solubility in H_2O at various temps. See Fig no.	Comments
Benzyl alcohol		C_7H_8O	5	< 0.1			1050	2.22			205		3		
Biphenyl		$C_6H_5C_6H_5$					1990				256	70			
Borax		$Na_2B_4O_7$			13		2370					741			
				2.2	13	3.5	1030								
Borax acid		H_3BO_3			14	10				4 - 6					
						50				4 - 6					
Bromine	D	Br_2	< 1/0 °C		12		3120/20 °C	2.22			59	- 7.2			See Section 2.3 and Table 2.1
Burner oils	D		Fig 2.11				840/20 °C						3		See Section 2.3 and Table 2.1
	E		Fig 2.11				940/20 °C						3		See Section 2.3 and Table 2.1
	F		Fig 2.11				950/20 °C						3		
Butane		C_4H_{10}			8	50	600/0 °C	2.22			- 0.5	138			
Butyl acetate	D	$CH_3COOC_4H_9$	< 1	2	19		880				125	- 77	2a		
Butyl alcohol	D	C_4H_9OH	< 5	0.9	18		810	2.22			118	- 90	2a		
Butyl glycol		$C_6H_{14}O_2$	< 5	< 0.1			900				171		3		
Butyric acid		C_3H_2COOH			21		960	2.22			164	6.5			
Calcium bisulphate		$Ca(HSO_3)_2$			13	25	1040			4 - 6					
Calcium chloride		$CaCl_2$			13			2.25							
Calcium hydroxide		$Ca(OH)_2$			13	5	1060		2.23	9 - 14					
Calcium nitrate		$Ca(NO_3)_2$							2.25						
Camphor		$C_{10}H_{16}O$					990				209	176			
Carbamide		$(H_2N)CO(NH_2)$					1320					132			
						50	1115			4 - 6					
Carbolic acid	D	C_6H_5OH	11				1070	2.22			43				
Carbon disulphide		CS_2	< 1	48	12		1262	2.22			46	- 112	1		
Carbon tetrachloride	T	CCl_4	< 1	20	15		1600				77	- 23			
Castor oil			Table 2.14	(0)			960								
Chloral		CCl_3CHO					1520				98	- 57			
Chloramine		$CH_3C_6H_4SO_2NCl$										183			
Chloride of lime	D	$Ca(ClO)_2\ 4H_2O$					2350								
Chloride of mercury	T	$Hg\ Cl_2$			13	0.1	1000			4 - 6					
							7150								
Chlorine	D	Cl_2			3			2.22			- 35	- 103			
Chlornaphthalene		$C_{10}H_7Cl$	2.5				1200				263	- 25			
Chloroform	D	$CHCl_3$	< 1	31	14		1490	2.22			61	2			E-mod and speed of sound - Table 2.1
Chlorosulphonic acid		$HClSO_3$	< 5		21		1280				158	- 80			
Chromic acid	D	H_2CrO_4	< 5				2700			0 - 4					
			< 5			10 - 50				0 - 4					
Citric acid		$C_6H_8O_7H_2O$			13		1550			0 - 4		153			
Copper (II) chloride		$CuCl_2 2H_2O$				10	3390					620		2.28	
							1090			0 - 4					
Copper cyanide		CuCN			13		2920								
Copper nitrate		$Cu(NO_3)_2 6H_2O$			13		2070							2.28	
		$Cu(NO_3)_2 3H_2O$					2320					114			
				2.2	13	10	1090								
Copper sulphate	D	$CuSO_4$					3610							2.28	
					13	10	1160			0 - 4					
				2.2	13	18	1210			0 - 4					
Corn oil			Table 2.14												
Cresol		$C_6H_4(CH_3)OH$			25		1040			0 - 4	191	30			
Cyclohexanol	D	C_6HOH	71	0.3			950	2.22			161		1		
Cyclohexanone	D	$C_6H_{10}O$	< 5	0.7			950				156		2b		
Diacetone alcohol	D		150	0.1	23		940				170	- 43	2b		
Dichloroacetic acid		$CHCl_2$-COOH	< 5				1550	2.22		0 - 4	192	- 11			
Dichloroethane	D	CH_2Cl-CH_2Cl		31.2	14		1180	2.22			59		1		
Dichloroethylene	D	$C_2H_2Cl_2$		32			1250	2.22			60	- 81	1		

LIBERTY EXHIBIT 1014, Page 108

This book belongs to Robert Durham (rdurham@thewaylabs.com)

Copyright Elsevier 2024

Substance		Chemical formula	Viscosity mm^2/s at 20 °C	Vapour pressure kPa at 20 °C	Vapour pressure kPa at various temps. See Fig 2.21 curve no.	Conc. % in H_2O	Density at 25 °C	Density at various temps. See Fig no.	Density at various conc. See Fig no.	pH/ region	Boiling point °C at 101.3 kPa (760 mm Hg)	Melting point °C	Fire hazard class- See Section 2.1.7	Solubility in H_2O at various temps. See Fig no.	Comments
Dichlorohydrin		$(CH_2Cl_2)_2CHOH$					1360				176				
Dichlorophenoxyacetic acid		$Cl_2C_6H_3O$ CH_2COOH								0 - 4					
Diesel fuel			Fig 2.11				830				210		3		
Diethyl carbonate		$(C_2H_5O)_2CO$			19		980				128	- 48	2b		
Dioctylphthalate			82				980								
Dioxan	D	$O_2(CH_2)_4$	2	3.9			1040	2.22			101	12	1		
Dipentene							850				180	- 70	3		
Diphenyloxide		$C_6H_4OC_6H_4$	4	0.03			1070				253	27	3		
Engine oil SAE 5W-50			Fig 2.12				900/20 °C						3		See Section 2.3 and Table 2.1
Ether	D	$C_4H_{10}O$	< 1	74			710	2.22			35		1		
Etherdiethylene		C_2H_4O		150			870				11	- 113			
Ethyl acetate	D	$CH_3COOC_2H_5$	< 1	13.8	16		900	2.22			77		1		
Ethyl alcohol		C_2H_5OH	< 5	8			790	2.22			78		1		
Ethyldiglycol		$HO(CH_2)_4$ $O_2C_2H_5$	< 5	0.02			990				202		3		
Ethyl chloride		C_2H_5Cl	< 1	133	9		890	2.22			12	- 139	1		
Ethyl glycol		$C_4H_{10}O_2$	2.3	0.5			930				135		2b		E-mod and speed of sound - Table 2.1
Ethyl glycol acetate		$C_6H_2O_3$	< 5	0.2			970				150		2b		
Ethylene diamine	D	H_2NCH_2 CH_2NH_2	1.5	1.4			900			9 - 14	117	11			
Ethylene glycol	D	$C_2H_6O_2$	18	< 0.13	24		1110	2.22			198		3		E-mod and speed of sound - Table 2.1
Fluorine	T	F									- 188	- 223			
Formaldehyde	D	HCHO			5		820				- 20				
Formic acid	D	HCOOH	1.5	5.3	18	20 - 50	1220	2.22			101				
Freon		CF_2Cl_2					1470				- 29	- 155			
Fruit juices					13										
Furfural	D	C_5H4O_2	1.4	0.3	22		1160	2.22			162		3		
Furfurole	D	C_5H6O_2		0.13	23		1160	2.22			171		3		
Gallic acid		$C_6H_2(OH)_3COOH$					1700			0 - 4					
Glycerine		$CH_2OHCHOH$ CH_2OH	1200				1260	2.22			290				
Ground nut oil			Table 2.14				910								See Tables 2.14, 2.15
Hexane		C_6H_{14}	< 1	30	14		660		2.22		69	- 90	1		
Hydrobromic acid		$Hbr \cdot H_2O$	< 1				1780		2.24	0 - 4		- 89			
				0.6		50	1520			0 - 4					
Hydrochloric acid	D	HCl		1.3	13	20	1100		2.24	0 - 4	110				
				1.3	13	36	1180			0 - 4					
Hydrofluoric acid	T	HF					990	2.22	2.24		20	- 83			
						1	1005			0 - 4					
				2.2		10	1030			0 - 4					
				1		40	1130			0 - 4					
						75	1240			0 - 4					
Hydrogen		H_2									- 253	-259			
Hydrogen peroxide		H_2O_2			21		1460				151	- 89			
				2.2	21	10	1040								
Hydrogen sulphide	D	H_2S					950/-50 °C	2.22			- 60	- 86			
Hydriodic acid		$HI.H_2O$					1700		2.24		127				
Industrial oils as per ISO -															
Cutting oil			Table 2.14	(0)			900/20 °C						3		See Section 2.3 and Table 2.1
Gear oil			Table 2.13	(0)			905/20 °C						3		

LIBERTY EXHIBIT 1014, Page 109

This book belongs to Robert Durham (rdurham@thewaylabs.com)

Copyright Elsevier 2024

2.6.2 Liquid Table

Substance		Chemical formula	Viscosity mm^2/s at 20 °C	Vapour pressure kPa at 20 °C	Vapour pressure kPa at various temps. See Fig 2.21 curve no.	Conc. % in H_2O	Density at 25 °C	Density at various temps. See Fig no.	Density at various conc. See Fig no.	pH/ region	Boiling point °C at 101.3 kPa (760 mm Hg)	Melting point °C	Fire hazard class- See Section 2.1.7	Solubility in H_2O at various temps. See Fig no.	Comments
Hydraulic oils			Table 2.14	(0)			880/20 °C						3		
Turbine oil			Table 2.14	(0)			885/20 °C						3		
Iodine	D	I_2					4940	2.22			184	114			
Iodoform		CHI_3					4010					120		2.28	
Iron (II) chloride		$FeCl_2$				10 - 50				0 - 4					
Iron (III) chloride		$FeCl_3$	1	2.2	13	10	1085			0 - 4					
			15	0.7	13	50	1550			0 - 4					
Iron nitrate		$Fe(NO_3)_3$		2.2		10	1080			0 - 4					
				1.8		25	1230			0 - 4					
Iron (II) sulphate		$FeSO_4\ 7H_2O$	< 5		13		1050								
Iron (III) sulphate		$Fe_2(SO_4)_3$			13	30 - 50				0 - 4					
Isobutylalcohol		$(CH_3)_2CHCH_2OH$	< 5	1.2			800				108		2a		
Isopropylalcohol		$CH_3CHOHCH_3$			16		780				82	- 89	1		
Isopropylnitrate					17		1190				100				
Kerosene			< 5	0.1			780				170		2b		See Tables 2.14, 2.15
Lacquer			200 - 500				900				150		2b		Non-Newtonian, see Section 2.4
Lactic acid		$H_6C_3O_3$			10	1020				0 - 4					
Latex			1000 - 4000			50	1050			6 - 9	100				Non-Newtonian, see Section 2.4
Lead		Pb					11350					327			
Lead acetate		$(CH_3COO)_2Pb\ 3H_2O$				10				6 - 9				2.28	
Lead nitrate		$Pb(NO_3)_2$				30				0 - 4				2.28	
Linseed oil			Table 2.14			930									
Liquid resin			20 - 300		(0)		970								
Lubricating oil SAE 75W-140			Table 2.13	(0)			910/20 °C								See Section 2.3 - Table 2.1
Magnesium carbonate		$MgCO_3$					2960								
Magnesium chloride		$MgCl_2\ GH_2O$			13		2320					708		2.28	
				2.2	13	10 - 50				4 - 6					
				2.2	13	10	1080			4 - 6					
				2.2	13	15	1130			4 - 6					
				2.2	13	25	1150			4 - 6					
				2.2	13	30	1280			4 - 6					
Magnesuim sulphate		$MgSO_4 7H_2O$			13		1680							2.28	
				2.2	13	10	1100			4 - 6					
				2.2	13	20	1300			4 - 6					
Maleic		$(HCCOOH)_2$			13		1590					130			
						50	1300			0 - 4					
Manganese chloride		$MnCl_2$			13		2980					650			
						10	1060			4 - 6					
Manganese chloride hydrate		$MnCl_2\ 4H_2O$					2010					58			
Manganese sulphate		$MnSO_4\ 7H_2O$					2090								
						30	1220			4 - 6					
Mercury	T	Hg					13600				357	- 39			E-mod and speed of sound - Table 2.1
Methyl acetate	D	$CH_3CO_2CH_3$	< 1		12		930				58		1		
Methyl alcohol	D	CH_3OH	< 1	13	14		790	2.22			65		1		E-mod and speed of sound - Table 2.1
Methylene chloride		CH_2Cl_2	< 1	72.4	11		1320	2.22			40				
Methylethylketone		C_4H_6O		15	16		810	2.22			80		1		
Methyl glycol		$C_3H_8O_2$	1.6	1.7			970				125		2b		
Methylchloride		CH_3Cl					1790				- 24		1		
Milk, fresh					13		1020								
Milk, sour					13		1020			4 - 6					
Molasses			100 - 50000												Non-Newtonian, see Section 2.4
Monochlorobenzene		C_6H_5Cl	1	1.6	20		1110	2.22			132		2a		
Monochloracetic acid		CH_2ClCO_2H	2.2 (50 °C)		24		1410			0 - 4	189	63			
Mustard			approx 5000		13										Non-Newtonian, see Section 2.4

LIBERTY EXHIBIT 1014, Page 110

This book belongs to Robert Durham (rdurham@thewaylabs.com)

Copyright Elsevier 2024

Substance		Chemical formula	Viscosity mm^2/s at 20 °C	Vapour pressure kPa at 20 °C	Vapour pressure kPa at various temps. See Fig 2.21 curve no.	Conc. % in H_2O	Density at 25 °C	Density at various temps. See Fig no.	Density at various conc. See Fig no.	pH/ region	Boiling point °C at 101.3 kPa (760 mm Hg)	Melting point °C	Fire hazard class- See Section 2.1.7	Solubility in H_2O at various temps. See Fig no.	Comments
Naphthalene		$C_{10}H_8$			27		1150				210	80			
Naphthalene sulphonic acid		$C_{10}H_7SO_3H$					1450					102			
						10	1030			0 - 4					
Nickel nitrate		$Ni(NO_3)_2\ 6H_2O$			13		2050				137	57			
					13	10	1050			4 - 6					
Nickel sulphate		$NiSO_4\ 7H_2O$			13		1950								
					13	10	1060			4 - 6					
Nitric acid	D	HNO_3			16		1500		2.24	0 - 4	83	- 42			
					16	1	1004			0 - 4					
					16	5	1030			0 - 4					
					16	10	1050			0 - 4					
				2	16	20	1120			0 - 4					
				1.5	16	40	1250			0 - 4					
					16	65	1480			0 - 4					
					16	80	1452			0 - 4					
Nitro benzine	D	$C_6H_5NO_2$	2	0.2			1200	2.22			211		3		
Nonane		C_9H_20	1	0.7			720	2.22			151	- 54	2b		
Octane		C_8H_{18}	< 1	2			700	2.22			126		1		
Octanol		C_6H_{13} CHOH CH_3	11				830				194	- 15			
Oleum		H_2SO_4 + 13%SO_3					1910			0 - 4					
Olive oil			Table 2.14	(0)			910								
Oxalic acid		$C_2H_2O_4\ 2H_2O$			13		1650					101			
					13	10 - 50				0 - 4					
					13	0.5	1000			0 - 4					
					13	10	1020			0 - 4					
					13	15	1030			0 - 4					
Ozone		O_3									- 112	- 192			
Paraffin							770				240	45 - 55			
Pentane		C_5H_{12}	< 1	67	11		620	2.22			36	- 130	1		
Peracetic acid		CH_3COOOH					1230				105				
Petrol			< 1				730				40		1		
Phenoldicarbonate							1130				312	80			
Phenolphthalein		$C_{20}H_{14}O_4$					1280					261			
Phosphoric acid	D	H_3PO_4			13		1840			0 - 4					
					13	10	1050			0 - 4					
				3	13	20	1120			0 - 4					
				1.3	13	40	1370			0 - 4					
					13	70	1530			0 - 4	181				
					13	85	1690			0 - 4					
Phthalic acid		$C_6H_4(CO_2H)_2$					1600					206			
Phthalic anhydride		$C_6H_4(CO)_2O$					1530					130			
Potassium bi-carbonate		$KHCO_3$			13		2170							2.27	
					13	10				6 - 9					
Potassium bi-chromate		$K_2Cr_2O_7$					2680								
						25	1050			0 - 4					
Potassium bi-sulphate		$KHSO_4$					2320					214			
						5	1035			0 - 4					
Potassium bromide		KBr			13		2750		2.26		1435	730			
Potassium carbonate		K_2CO_3					2420					891		2.27	
				2.2	13	20	1190			9 - 14					
Potassium chlorate	D	$KClO_3$			13		2320					356		2.27	
Potassium chloride		KCl			13		1980		2.22			776		2.27	
						20	1130			6 - 9					
						10 - 30				6 - 9					
Potassium chromate	D	K_2CrO_4					2730					968		2.27	

LIBERTY EXHIBIT 1014, Page 111

This book belongs to Robert Durham (rdurham@thewaylabs.com)

Copyright Elsevier 2024

Substance		Chemical formula	Viscosity mm^2/s at 20 °C	Vapour pressure kPa at 20 °C	Vapour pressure kPa at various temps. See Fig 2.21 curve no.	Conc. % in H_2O	Density at 25 °C	Density at various temps. See Fig no.	Density at various conc. See Fig no.	pH/ region	Boiling point °C at 101.3 kPa (760 mm Hg)	Melting point °C	Fire hazard class- See Section 2.1.7	Solubility in H_2O at various temps. See Fig no.	Comments
Potassium chrome sulphate		$KCr(SO_4)\ 12H_2O$			13		1830								
Potassium cyanate	D	KOCN					2060								
Potassium cyanide	T	KCN			13		1520				635				
					13	5 - 10				9 - 14					
Potassium fluoride	T	$KF\ 2H_2O$					2450				156	41			
Potassium hydroxide	D	KOH					2040		2.23		360			2.27	
				2.2	13	10 - 90				9 - 14					
				2.2	13	30	1290			9 - 14					
				2.2	13	50	1510			9 - 14					
Potassium iodide		KI					3130		2.26						
Potassium nitrate		KNO_3					2110							2.27	
				2.2		10	1080	2.25							
Potassium oxalate		$K_2C_2O_4\ H_2O$					2130								
						15	1170			0 - 4					
Potassium perchlorate		$KClO_4$					2520							2.27	
Potassium permanganate		$KMnO_4$					2700								
				2.2	13	20	1040			0 - 4					
Potassium persulphate		$K_2S_2O_8$					2480								
						1 - conc				0 - 4					
Potassium silicate		K_2SiO_3										976		2.27	
Potassium sulphate		K_2SO_4			13		2660								
Propane		C_3H_8			2		580	2.22			- 42	- 190	1		
Propanol		C_3H_7OH	2.8	2.8			800	2.22			97	- 126	1		
Propionic acid		C_2H_5COOH			21		990				141	- 21			
						25	1030			0 - 4					
Pyridine	D	C_5H_5N		3.6	19		980				116	- 42			
Pryogallol	D	$C_6H_3(OH)_3$					1460				309				
						10	1030			0 - 4					
Quinine		$C_{20}H_{24}N_2O_2$										57			
Salicylic acid		$C_6H_4OHCO_2H$					1440				211	159			
						conc	1000			0 - 4					
Seawater - 4% NaCl			1	2.3	13		1020			6 - 9	100				See Section 2.2.4 - Table 2.1
Sebacic acid		$C_8H_{16}(COOH)_2$					915				240	55			
Silver bromide		AgBr					6470				432				
Silver chloride		AgCl					5560				455				
Silver nitrate	D	$AgNO_3$			13		4350		2.26		212				
Size			500 - 3000							6 - 9	100				Non-Newtonian, see Section 2.4
Sodium acetate		$NaC_2H_3O_2\ 3H_2O$			13	7	1450				123	58		2.27	
					13		1050			6 - 9					
Sodium arsenate	T	$Na_2HAsO_4\ 7H_2O$					1880								
Sodium bi-carbonate		$NaHCO_3$			13		2160								
					13	5	1040			9 - 14					
Sodium bi-sulphate		$NaHSO_4\ H_2O$			13		2100					58			
					13	10	1080			0 - 4					
Sodium bi-sulphite		$NaHSO_3$			13		1480								
				2.2	13	10	1100								
Sodium bromide		$NaBr\ 2H_2O$					2180								
						5 - 10				4 - 6				2.27	
Sodium carbonate		Na_2CO_3			13		2530		2.26			850		2.27	
				2.2	13	10 - 50				9 - 14					
				2.2	13	10	1150			9 - 14					
Sodium chlorate		$NaClO_3$					2480					250		2.27	
						28	1410			4 - 6					
Sodium chloride		NaCl			13		2170		2.26		1413	801		2.27	
				2.2	13	1 - conc				6 - 9					

LIBERTY EXHIBIT 1014, Page 112

This book belongs to Robert Durham (rdurham@thewaylabs.com)

Copyright Elsevier 2024

Substance	Chemical formula	Viscosity mm^2/s at 20 °C	Vapour pressure kPa at 20 °C	Vapour pressure kPa at various temps. See Fig 2.21 curve no.	Conc. % in H_2O	Density at 25 °C	Density at various temps. See Fig no.	Density at various conc. See Fig no.	pH/ region	Boiling point °C at 101.3 kPa (760 mm Hg)	Melting point °C	Fire hazard class- See Section 2.1.7	Solubility in H_2O at various temps. See Fig no.	Comments
Sodium di-chromate	$Na_2Cr_2O_7 2H_2O$			13		2520								
Sodium fluoride T	NaF					2550					988		2.27	
					5	1050			4 - 6				2.27	
Sodium fluorsilicate	Na_2SiF_6					2680								
Sodium hydrogen difluoride	$NaHF_2$					2080								
Sodium hydrosulphate	$NaHSO_4$					2440								
	$NaHSO_4 H_2O$					2100					58			
Sodium hydroxide D	NaOH			13		2130		2.23		1390	318		2.27	
			2.2	13	10 - 70				9 - 14					
			2.2	13	30	1330			9 - 14					
			2.2	13	50	1530			9 - 14					
Sodium hypochlorite D	NaOCl		2.3	13	5	1020			6 - 9					
Sodium nitrate	$NaNO_3$			13		2260		2.25			307		2.27	
				13	4	1030			6 - 9					
Sodium perchlorate	$NaClO_4 H_2O$					2020					130		2.27	
					10	1070			4 - 6					
Sodium peroxide	Na_2O_2					2810								
					10	1110			6 - 9					
Sodium phosphate primary	$NaH_2PO_4 12H_2O$					1910					60			
			2.2		10	1070								
Sodium phosphate secondary	$Na_2HPO_4 12H_2O$					1520								
			2.3		50	1250			0 - 4					
Sodium phosphate tertiary	$Na_3PO_4 12H_2O$					1620								
			2.2		conc	1110			9 - 14					
Sodium silicate	Na_2SiO_3			13		2400		2.25			1088			
Sodium sulphate	$Na_2SO_4 10H_2O$			13		1460					32		2.27	
			2.2	13	1	1000			4 - 6					
			2.2	13	5	1020			4 - 6					
Sodium sulphide	$Na_2S 9H_2O$			13		1420								
			2.2	13	20	1070			6 - 9					
Sodium sulphite	$Na_2SO_3 7H_2O$			13		1530							2.27	
Sodium thiosulphate	$Na_2S_2O_3 5H_2O$			13		1730					40			
			2.2		1-conc				4 - 6					
Soya oil		Table 2.14	(0)			920								
Stearic acid	$CH_3(CH_2)_{16}COOH$					840				380	- 70			
Styrene	C_8H_8	< 1	0.95	21		910				145		2b		
Sulphate liquor 20% DS*		Fig 2.20		13		1090								*DS - Dry substance, content by weight - see equations 2.13 to 2.20
40% DS*		Fig 2.20				1195								
50% DS*		Fig 2.20				1250								
60% DS*		Fig 2.20				1305								
Sulphur	S					2060	2.22			445	113			
Sulphur dioxide	SO_2					1380	2.22			- 10	- 73			
	$SO_2 H_2O$			5				2.24	0 - 4					
Sulphuric acid D	H_2SO_4			13		1030		2.24	0 - 4	338				
Sulphurous acid D	H_2SO_3			13		1840		2.24	0 - 4					
				13	10	1070			0 - 4					
				13	15	1100			0 - 4					
			2.1	13	20	1140			0 - 4					
				13	30	1220			0 - 4					
				20	40	1300			0 - 4					
				20	50	1400			0 - 4					
				20	60	1500			0 - 4					
			0.1	20	70	1610			0 - 4					
				20	80	1730			0 - 4					
				20	90	1820			0 - 4					
Sweetened juice				13										

LIBERTY EXHIBIT 1014, Page 113

This book belongs to Robert Durham (rdurham@thewaylabs.com)

Copyright Elsevier 2024

Substance		Chemical formula	Viscosity mm^2/s at 20 °C	Vapour pressure kPa at 20 °C	Vapour pressure kPa at various temps. See Fig 2.21 curve no.	Conc. % in H_2O	Density at 25 °C	Density at various temps. See Fig no.	Density at various conc. See Fig no.	pH/ region	Boiling point °C at 101.3 kPa (760 mm Hg)	Melting point °C	Fire hazard class- See Section 2.1.7	Solubility in H_2O at various temps. See Fig no.	Comments
Tannic acid		$C_{76}H_{52}O_{46}$				5 - 50				0 - 4					
						10	1035			0 - 4					
Tartaric acid		$C_4H_6O_6$			13	10 - 50				0 - 4					
Tetrachloroethane		$CHCl_2CHCl_2$	1.1	0.8	20		1590	2.22			146				
Tetrachloroethylene	D	C_2Cl_4	< 1	2.4	19		1620	2.22			121				
Tetralin		$C_{10}H_{12}$		0.1			970				207		3		
Tin		Sn					5750				2260	232			
Tin (II) chloride		$SnCl_2\ 2H_2O$					2710					38			
Tin (IV) chloride		$SnCl_4$					3950				652	246			
Tincture of iodine			< 5	8			905				78		1		
Thioglycollic acid		CH_2SHCO_2H					1330				120	- 17			
Tuolene	D	$C_6H_5CO_3$	< 1	3.5	18		860	2.22			110		1		
Trichloroacetic acid	D	CCl_3CO_2H					1620			0 - 4	198	56			
Trichloroethylene	D	C_2HCl_3	< 1	7.5	16		1460	2.22			87				
Turpentine							860				156		2b		E-mod and speed of sound - Table 2.1
Unslaked lime		CaO					3250				2850	2580			
						10				9 - 14					
Valtran			Table 2.14	(0)			920								
Vinylacetate		$C_4H_6O_2$		15.5			930				73		1		
Vinegar							990			0 - 4					
Water			1	2.3	13		997			6 - 9	100				See Section 2.2 - Table 2.1
Xylene	D	$C_6H_4(CH_3)_2$	< 1	1			860	2.22			139		2a		
Zinc		Zn					7140					419			
Zinc chloride		$ZnCl_2$			13		2910					283			
				2.2	13	5	1030			4 - 6					
				2.2	13	20	1150			4 - 6					
				2.2	13	30	1220			4 - 6					
				2.2	13	40	1420			4 - 6					
				2.2	13	60	1750			4 - 6					
Zinc cyanide		$Zn(CN)_2$					1850								
Zinc sulphate		$ZnSO_4\ 7H_2O$			13		1960					100		2.28	

LIBERTY EXHIBIT 1014, Page 114

This book belongs to Robert Durham (rdurham@thewaylabs.com)

Copyright Elsevier 2024

2.6.3 Supplementary diagrams

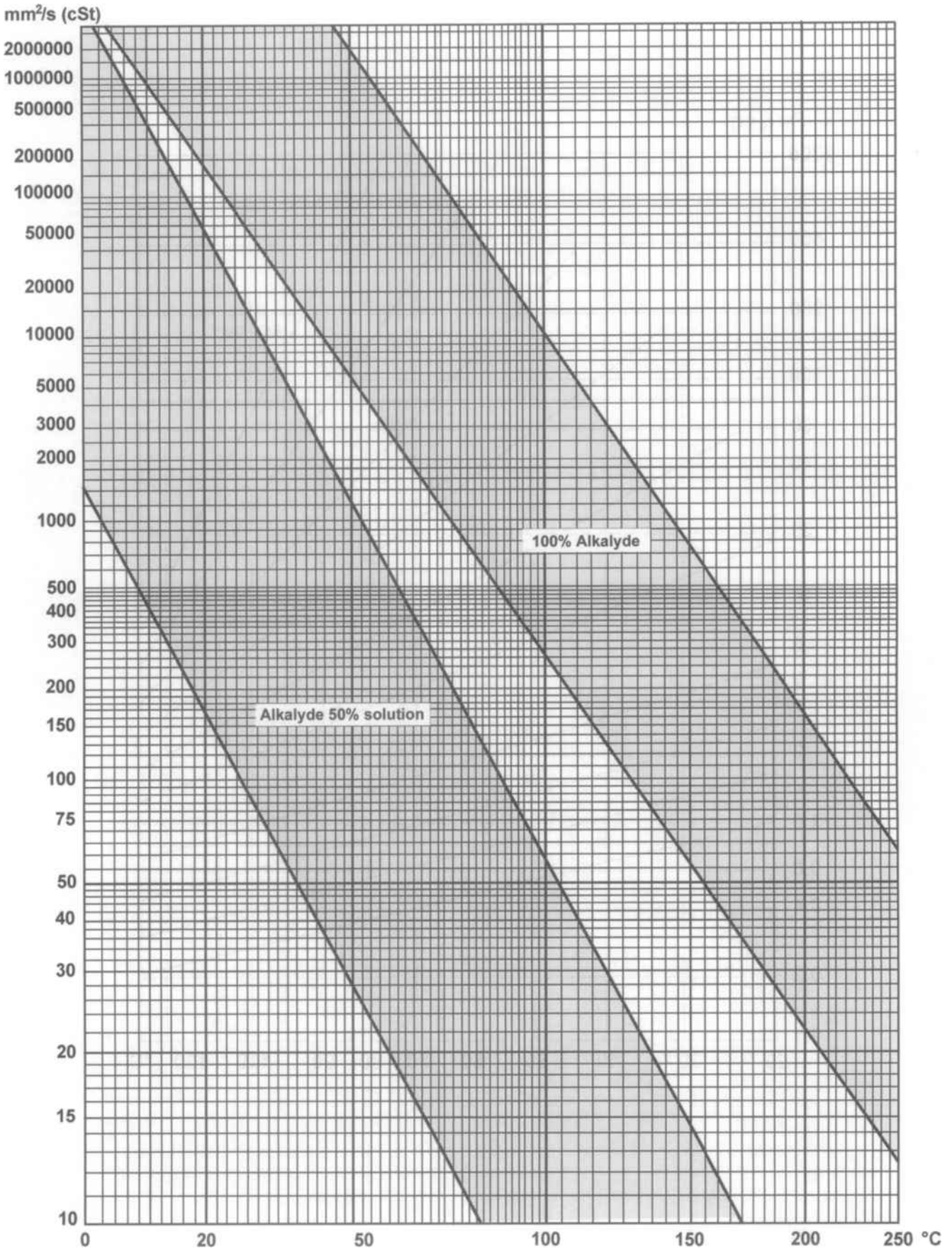

Figure 2.19 Viscosity of alkydes at various temperatures

This book belongs to Robert Durham (rdurham@thewaylabs.com)
Copyright Elsevier 2024

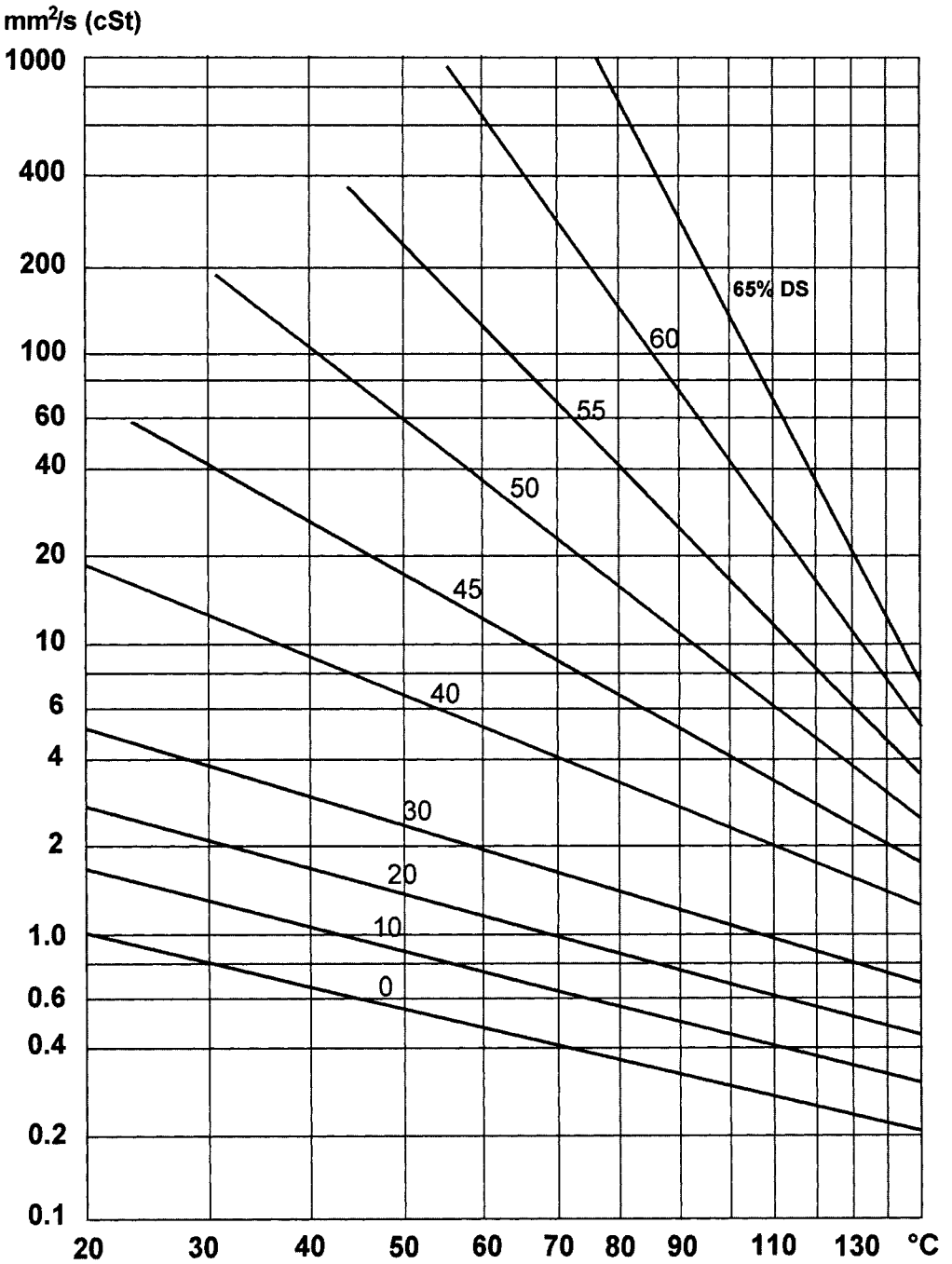

Figure 2.20 Viscosity temperature diagram for black liquor

LIBERTY EXHIBIT 1014, Page 116

This book belongs to Robert Durham (rdurham@thewaylabs.com)
Copyright Elsevier 2024

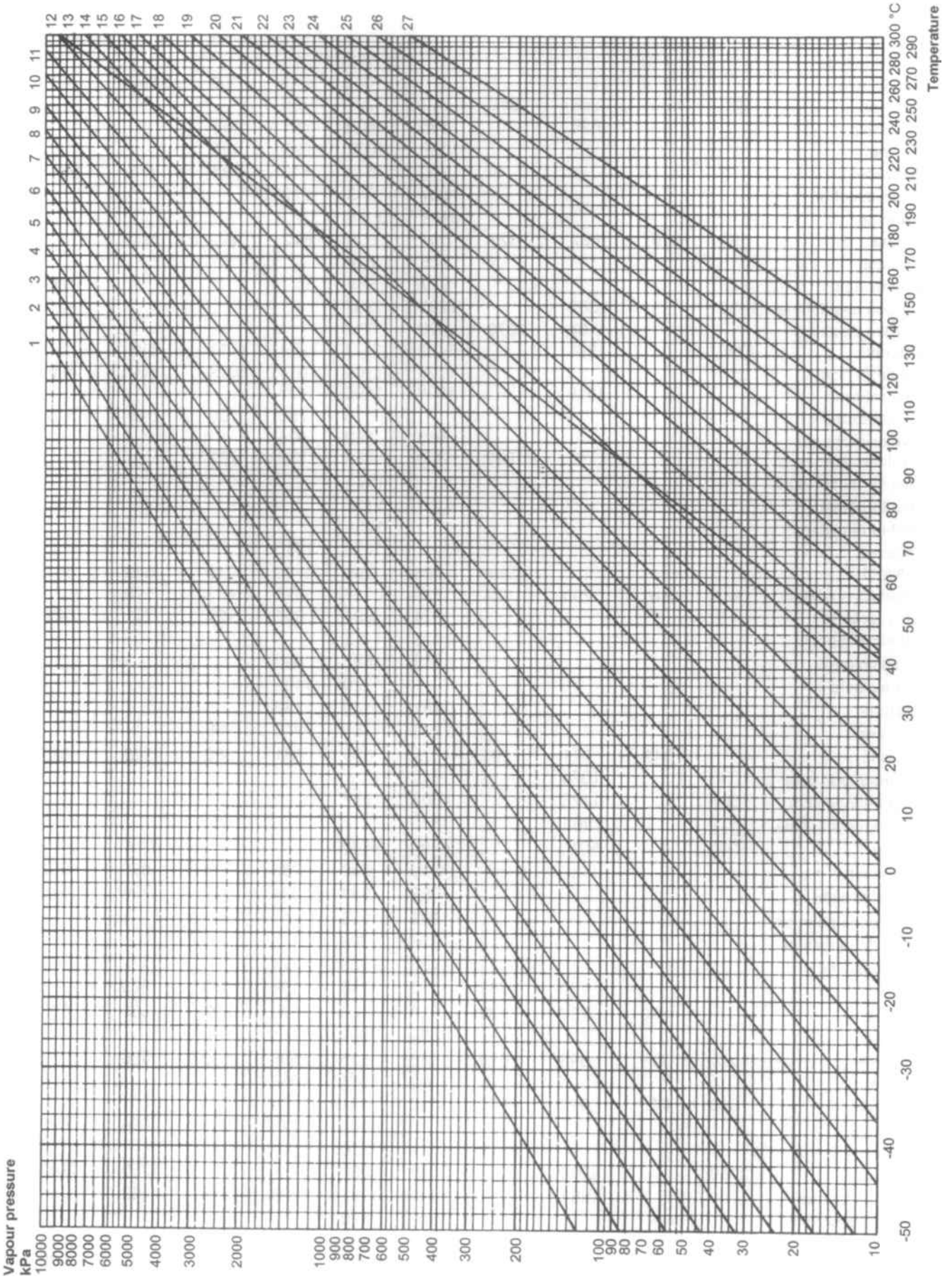

Figure 2.21 Vapour pressure diagram (see Liquid Table, Section 2.6.2 for cross references)

This book belongs to Robert Durham (rdurham@thewaylabs.com)
Copyright Elsevier 2024

Substance	Temperature °C									
	-100	-75	-50	-25	0	20	50	100	150	200
Acetaldehyde						783				
Acetic acid						1049	1018	960	896	827
Acetone	920	893	868	840	812	791	756			
Ammonia			695		636	609	561	458		
Aniline					1039	1022	996	951		
Benzene					900	879	847	793	731	661
Benzylalcohol					1061	1045	1022			
Bromide					3188	3120				
Butane	698	676	652	627	601	579	542	468	296	
Butanol					825	810				
Butyric acid					977	958	927			774
Carbon bi-sulphide	1432		1362		1292	1262				
Carbon dioxide			1154	1070	925	772				
Chlorine	1717		1595		1469	1411	1314	1111	810	
Chlorobenzene					1128	1106	1074	1019	960	896
Chloroform			1618		1526	1490	1433			
Cyclohexane						779	750	700	645	578
Cyclohexanone					963	952	925			
Cyclohexene				842	830	811	780	732		
Dichloroacetic acid						1552				
Dichloroethane					1207	1176				
Dichloroethylene						1250				
Dioxane						1030	1010			
Ethanol					806	789	763	716	649	557
Ether (Diethylether)	842	816	790	764	736	714	676	611	518	
Ethyl acetate					924	901	864	797	721	621
Ethylene glycol					1128	1112				
Ethyl chloride					919	892	846			
Formic acid						1220	1184			
Furfurol					1181	1160	1128			
Glycerine					1273	1261	1242	1209		
Hexane		742	721	700	678	659	631	580	520	438
Hydrochloric acid	1235		1076		920					
Hydrofluoric acid	1660		1123		1002	987				
Hydrogen sulphide	1170		980		870					
Iodine	5060		5010		4960	4940			3780	
Methanol					810	792	765	714	650	553
Methyl acetate					959	934	894	822	734	610
Methylene chloride					1362	1326				
Methylethylketone					826	803				
Nitrobenzene					1223	1203	1174			
Nonane			769	751	733	718	694	653	609	
Octane		860	757	738	719	703	678	635	588	532
Octanol					842	829				
Pentane	737	715	693	670	646	626	596	533	460	
Phenol					1092	1071	1050			
Propane	646	619	590	560	528	501	450			
Propanol						804	779	733	674	592
Styrol						910				
Sulphur	2100		2080		2070	2060			1780	1740
Sulphur dioxide			1557		1435	1383	1296	1118	768	
Tetrachloroethane					1626	1593				
Tetrachloroethylene					1656	1621				
Toluole					885	868	839	739	737	672
Trichlorethylene						1463				
Xylene					881	864	838	795		678

Figure 2.22 Density for liquids at various temperatures

LIBERTY EXHIBIT 1014, Page 118

This book belongs to Robert Durham (rdurham@thewaylabs.com) Copyright Elsevier 2024

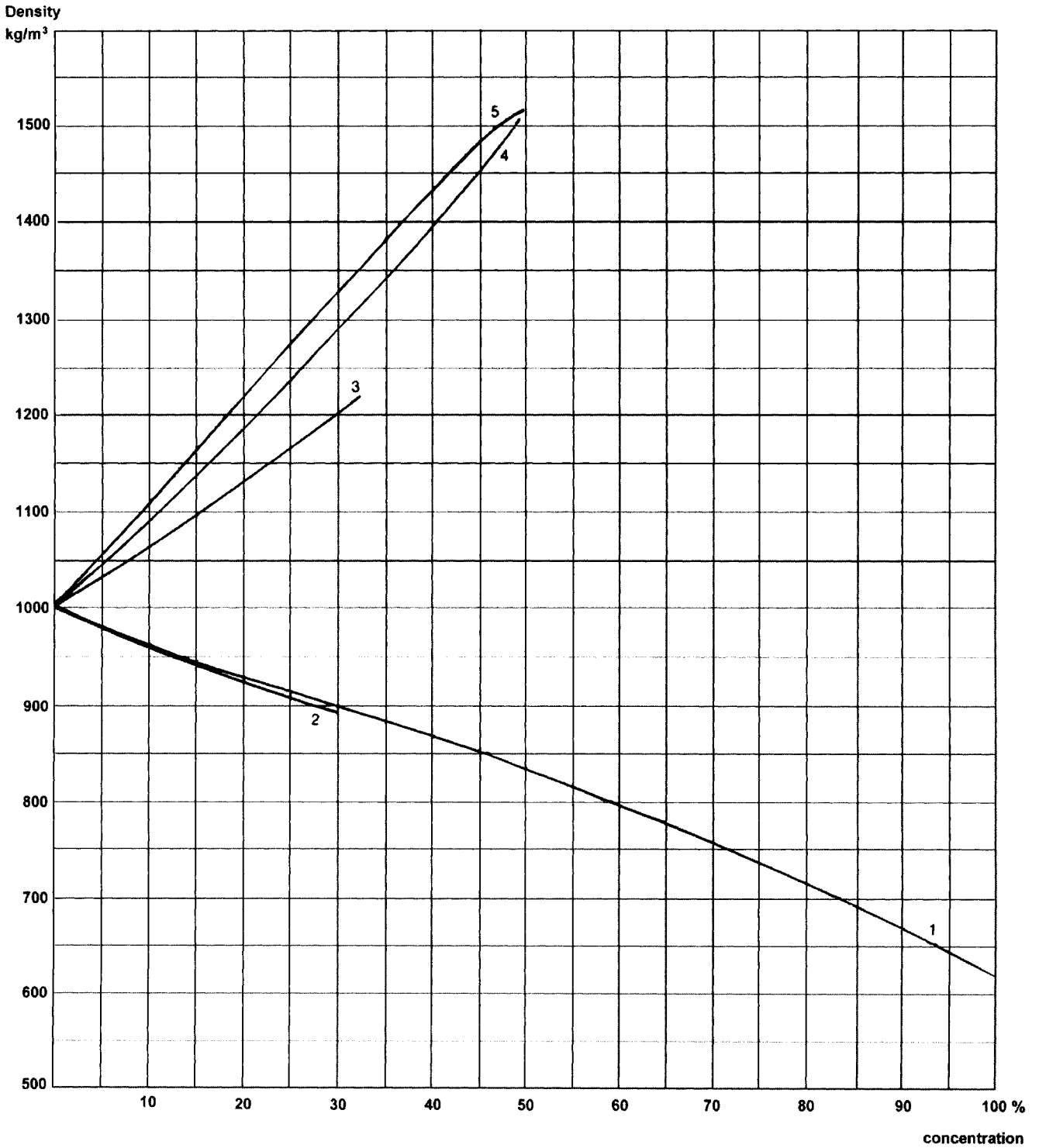

1. Ammonia solution at 15 °C
2. Ammonium hydroxide solution 20 °C
3. Calcium hydroxide solution 20 °C
4. Potassium hydroxide solution 15 °C
5. Sodium hydroxide solution 15 °C

Figure 2.23 Density against concentration for various bases

This book belongs to Robert Durham (rdurham@thewaylabs.com)
Copyright Elsevier 2024

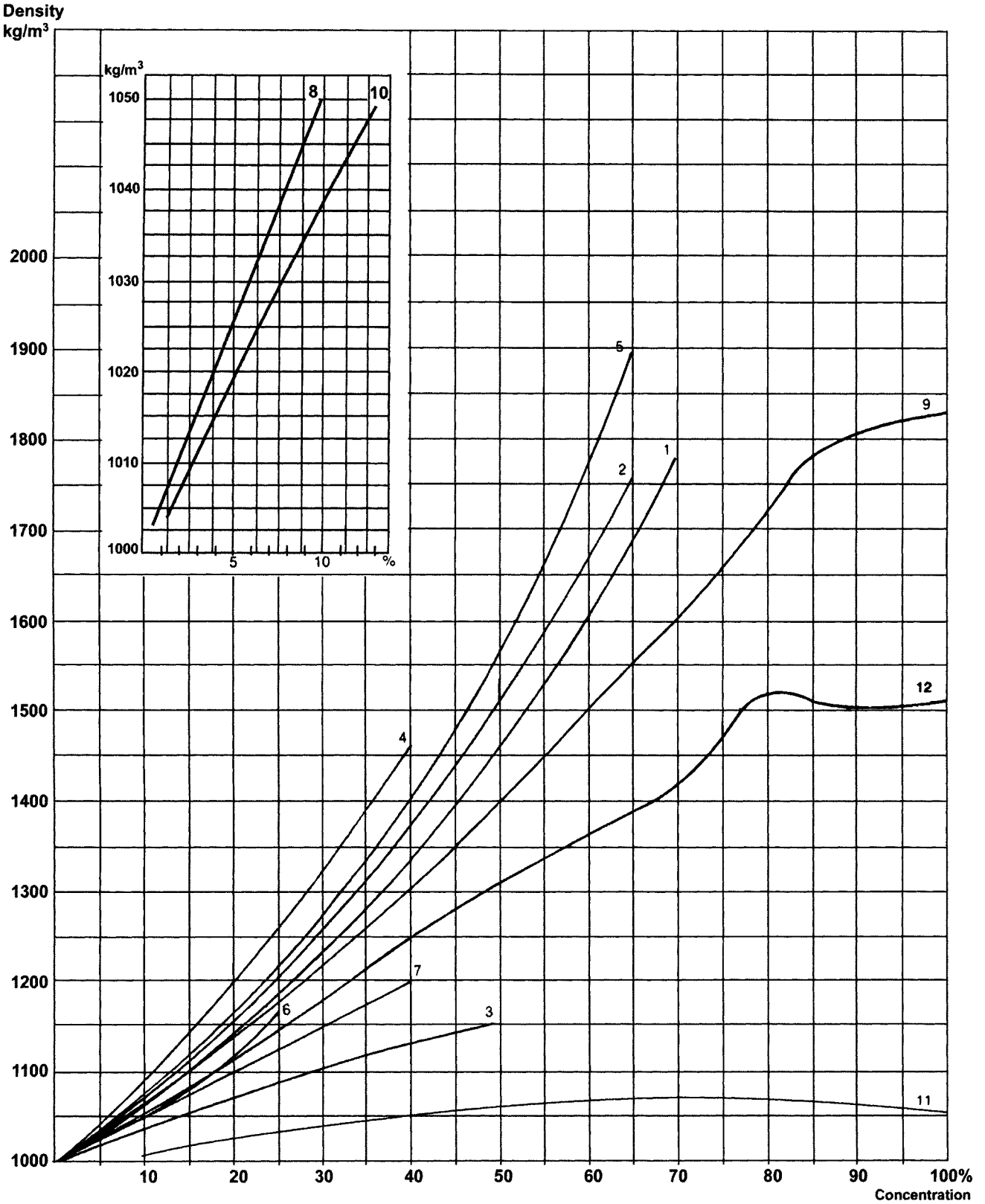

1. Arsenic acid	at	15°C	7. Hydrochloric acid	at	20°C
2. Hydrobromic acid		20°C	8. Sulphur dioxide solution		15°C
3. Hydrofluoric acid		20°C	9. Sulphuric acid		20°C
4. Iodic acid		18°C	10. Sulphurous acid		15,5°C
5. Hydroidinic acid		20°C	11. Acetic acid		20°C
6. Chloric acid		18°C	12. Nitric acid		18°C

Figure 2.24 Density against concentration of various acids

LIBERTY EXHIBIT 1014, Page 120

This book belongs to Robert Durham (rdurham@thewaylabs.com)
Copyright Elsevier 2024

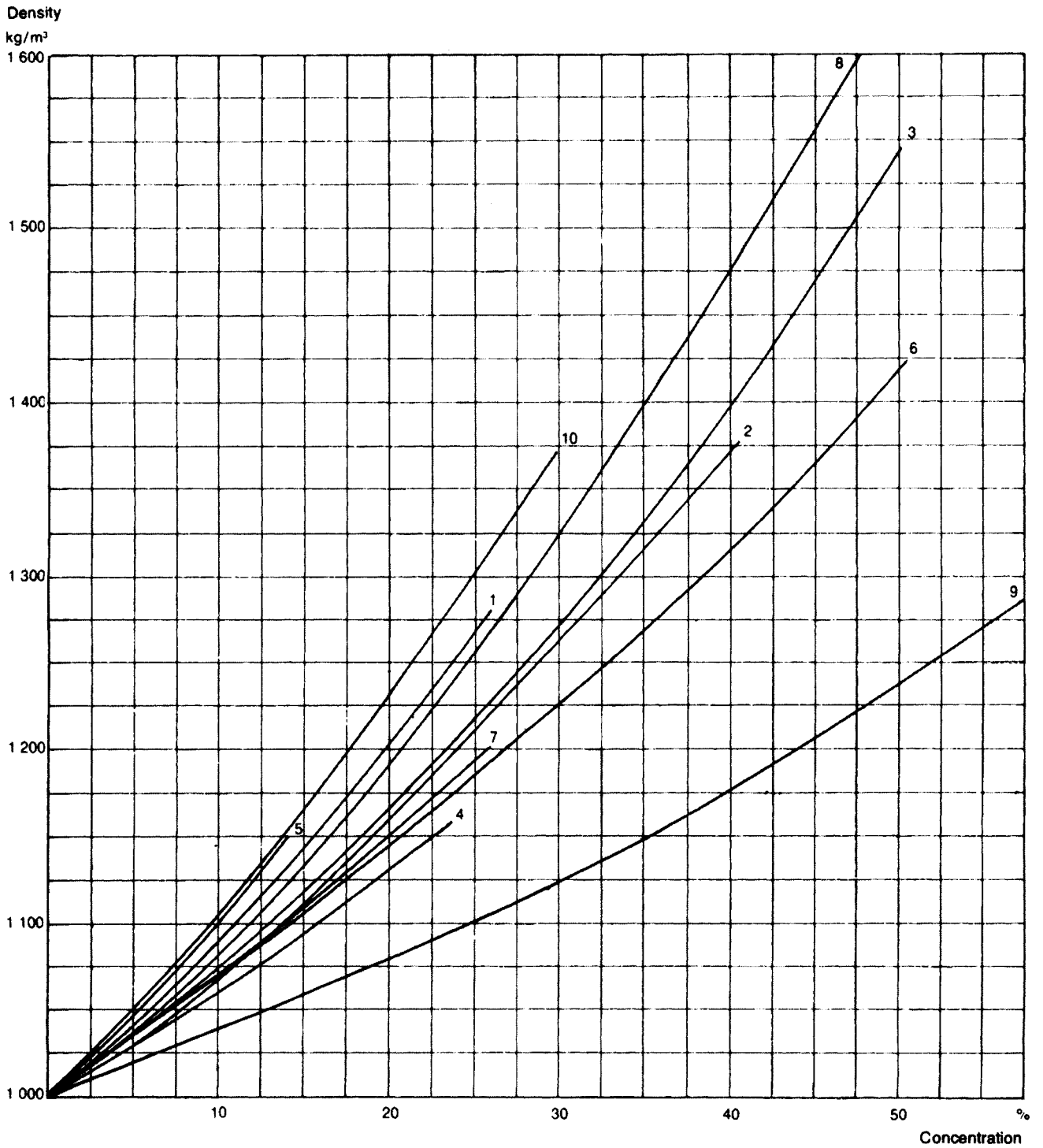

1. Barium chloride at 20°C
2. Potassium bromide 20°C
3. Potassium iodide 20°C
4. Potassium nitrate 20°C
5. Sodium carbonate 15°C
6. Solution of natronitrite
7. Sodium chloride at 10°C
8. Silver nitrate 20°C
9. Sugar solution
10. Zinc sulphate 20°C

Figure 2.25 Density against concentration for various salts

This book belongs to Robert Durham (rdurham@thewaylabs.com)
Copyright Elsevier 2024

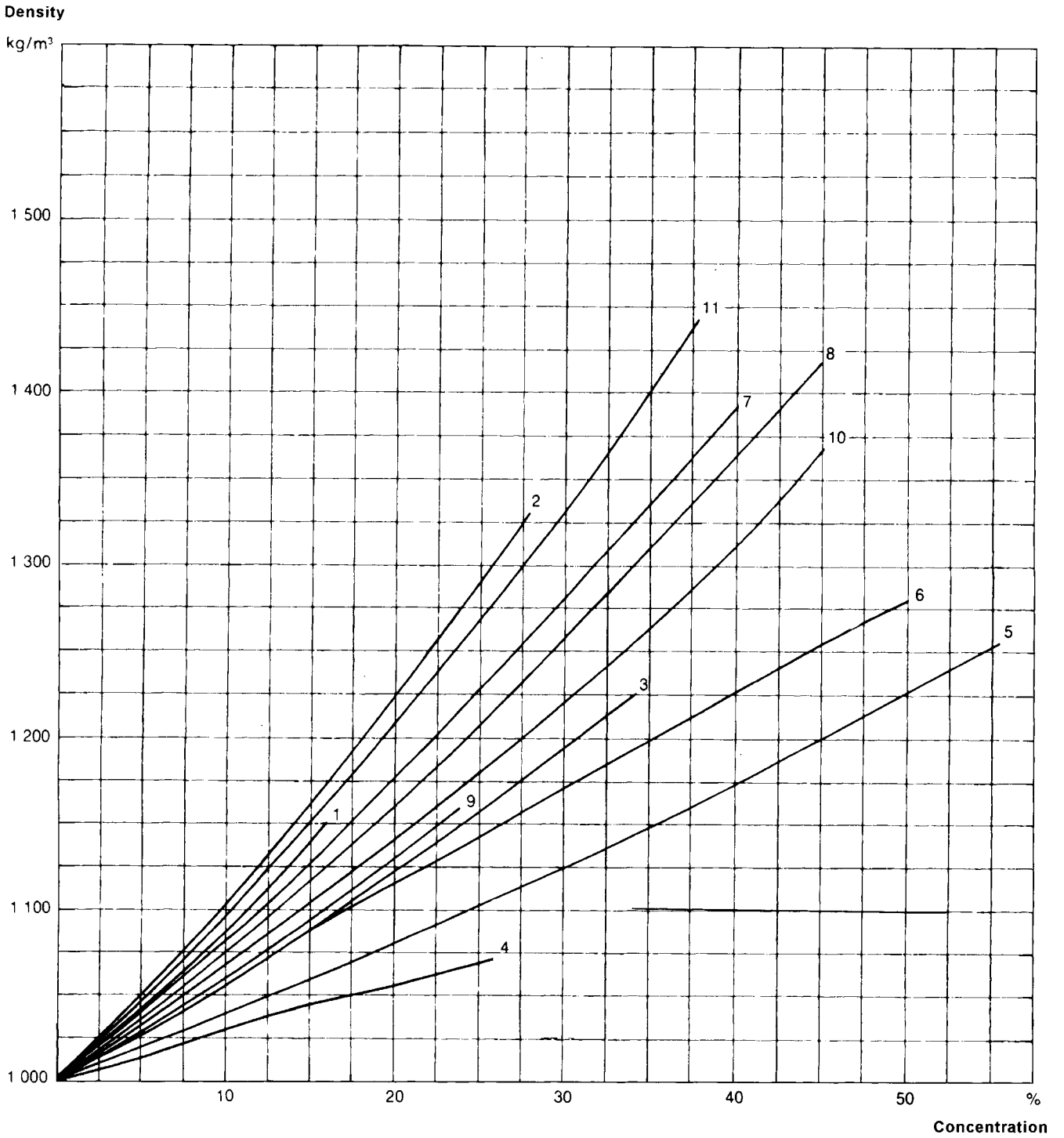

1. Aluminium chloride	at 18°C	7. Calcium chloride	at 20°C
2. Aluminium sulphate	19°C	8. Calcium nitrate	18°C
3. Ammonium bromide	18°C	9. Potassium chloride	20°C
4. Ammonium chloride	20°C	10. Sodium nitrate	20°C
5. Ammonium nitrate	20°C	11. Sodium silicate	20°C
6. Ammonium sulphate	20°C		

Figure 2.26 Density against concentration for various salts

LIBERTY EXHIBIT 1014, Page 122

This book belongs to Robert Durham (rdurham@thewaylabs.com) Copyright Elsevier 2024

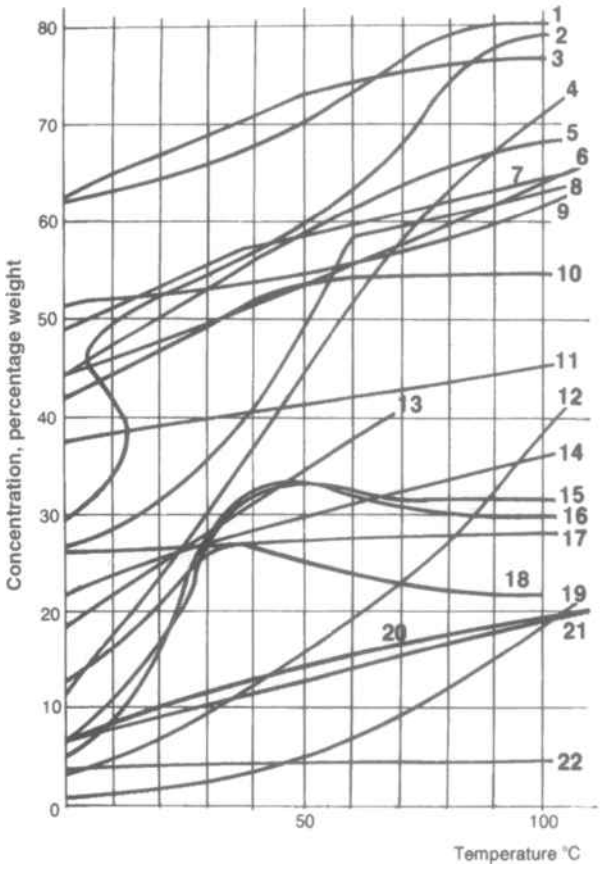

	Curve no.
Potassium bicarbonate	13
Potassium hydroxide	7
Potassium carbonate	9
Potassium chlorate	12
Potassium chloride	14
Potassium chromate	11
Potassium nitrate	4
Potassium perchlorate	19
Potassium sulphate	21
Sodium acetate	8
Sodium bicarbonate	20
Sodium bromide	10
Sodium dichromate	1
Sodium fluoride	22
Sodium hydroxide	2
Sodium carbonate	15
Sodium chlorate	5
Sodium chloride	17
Sodium nitrate	6
Sodium perchlorate	3
Sodium sulphate	16
Sodium sulphite	18

Figure 2.27 Solubility of salts in water at various temperatures

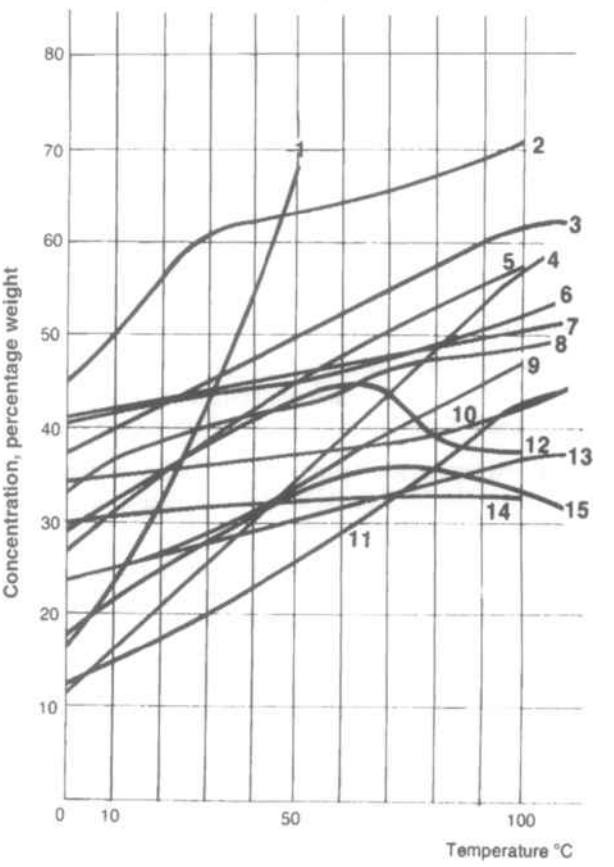

	Curve No.
Aluminium chloride	14
Aluminium nitrate	3
Aluminium sulphate	9
Ammonium perchlorate	4
Ammonium sulphate	7
Barium chloride	13
Lead acetate	1
Lead nitrate	5
Iron (II) chloride	8
Copper (II) chloride	6
Copper (II) nitrate	2
Copper (II) sulphate	11
Magnesium chloride	10
Magnesium sulphate	15
Zinc sulphate	12

Magnesium sulphate 15
Zinc sulphate 12

Figure 2.28 Solubility of salts in water at various temperatures

This book belongs to Robert Durham (rdurham@thewaylabs.com)
Copyright Elsevier 2024

2.7 Useful references

Process Plant Design and Operation, D.Scott, F Crawley, Institution of Chemical Engineers, 1992, ISBN 0 85295 278 3.

Nomenclature for Hazard and Risk Assessment in the Process Industries, David Jones Institution of Chemical Engineers, ISBN: 085295297X.

Institution of Chemical Engineers (IChemE), Davis Building, 165-189 Railway Terrace, Rugby CV21 3HQ UK, Tel: 01788 578214, Fax: 01788 560833, www.icheme.org.

American Institute of Chemical Engineers (AIChE), 3 Park Avenue, New York, NY 10016-5991 USA, Tel: 212 591 8100, Fax: 212 591 8888, www.aiche.org.

Chemical Industries Association (CIA), Kings Buildings, Smith Square, London SW1P 3JJ UK, Tel: 020 7834 3399, Fax: 020 7834 4469, www.cia.org.uk.

UK Fire Protection Association, London Road, Moreton-in-Marsh, Gloucestershire GL56 0RH UK, Tel: 01608 812500, Fax: 01608 812501, www.nfpa.org.

National Fire Protection Agency (NFPA), 1 Batterymarch Park, Quincy, Massachusetts 02169-7471 USA, Tel: 617 770 3000, www.nfpa.org.

Health Protection Agency, 7th Floor, Holborn Gate, 330 High Holborn,London WC1V 7PP UK, Tel: 020 7759 2700, Fax: 020 7759 2733, www.hpa.org.uk

American Petroleum Institute (API), 1220 L Street, NW, Washington, DC 20005-4070 USA Tel: 202 682 8000, www.api.org.

American Society of Mechanical Engineers (ASME), Three Park Avenue, New York, NY 10016-5990 USA, Tel: 973 882 1167, www.asme.org.

CONCAWE, Boulevard du Souverain 165, B-1160 Brussels Belgium, Tel: 02 566 9160, Fax: 0 2 566 9181, www.concawe.be.

Energy Institute, 61 New Cavendish Street, London, W1G 7AR, UK,Tel: 020 7467 7100, Fax: 020 7255 1472, www.energyinst.org.uk.

American National Standards Institute (ANSI), 25 West 43rd Street, (between 5th and 6th Avenues), 4th floor, New York, NY 10036 USA, Tel: 212 642 4900, www.ansi.org.

Health and Safety Executive (HSE), Rose Court, 2 Southwark Bridge, London SE1 9HS UK, Tel: 0845 345 0055, www.hse.gov.uk.

United Nations Economic Commission for Europe (UNECE), Palais des Nations, CH - 1211 Geneva 10, Switzerland, Tel: 022 917 1234, Fax: 0 22 917 0505, www.unece.org.

ACGIH®, 1330 Kemper Meadow Drive Cincinnati, Ohio 45240, USA, Tel: 513 742 6163, Fax: 513 742 3355, www.acgih.org.

BSI British Standards, 389 Chiswick High Road, London W4 4AL UK, Tel: 020 8996 9000, Fax: 020 8996 7001, www.bsi-global.com.

CENELEC, 35, rue de Stassartstraat, B-1050 Brussels, Tel: 02 519 6871, Fax: 02 519 6919, www.cenelec.org

IEC, 3 rue de Varembé, PO Box 131, CH-1211 Geneva 20, Switzerland, Tel: 022 919 0211, Fax: 022 919 0300, www.iec.ch.

SAE 400 Commonwealth Drive, Warrendale, PA 15096-0001 USA, Tel: 724 776 4841, www.sae.org.

EN 50 014 Electrical apparatus for potentially explosive atmospheres- General requirements.

BS 5345 :1980 Code of Practice for Selection, Installation. & Maintenance of Electrical. Apparatus for Use in Potentially Explosive Atmospheres (save mining applications or explosive processing & manufacture).

BS 2869:2006 Fuel oils for agricultural, domestic and industrial engines and boilers. Specification.

ISO 3448:1992 Industrial liquid lubricants - ISO viscosity classification.

BS 4231:1992 Classification for viscosity grades of industrial liquid lubricants

BS 5908:1990 Code of practice for fire precautions in the chemical and allied industries.

ANSI B31.3 (Chemical Plant and Petroleum Refinery Code)

LIBERTY EXHIBIT 1014, Page 124

This book belongs to Robert Durham (rdurham@thewaylabs.com) Copyright Elsevier 2024