GARDNER DENVER®

300FWF996 Rev C
August, 2005

WELL SERVICING PUMP

MODEL

GD-2500Q QUINTUPLEX

OPERATING AND SERVICE MANUAL

Gardner Denver

ECN 1026734

GD-2500Q QUINTUPLEX
WELL SERVICING PUMP

MAINTAIN PUMP RELIABILITY AND PERFORMANCE WITH GENUINE GARDNER DENVER PARTS AND SUPPORT SERVICES

Gardner Denver® genuine pump parts are manufactured to design tolerances and are developed for optimum dependability. Design and material innovations are the result of years of experience with hundreds of different pump applications. Reliability in materials and quality assurance is incorporated in our genuine replacement parts.

Your authorized Gardner Denver Sales Office offers all the backup you'll need. The Fort Worth and Tulsa Manufacturing Facilites maintain a large inventory of genuine parts.

Gardner Denver supports your needs with these services:

1. Trained parts specialists to assist you in selecting the correct replacement parts.
2. Repair and maintenance kits designed with the necessary parts to simplify servicing your pump.

Authorized service technicians are factory trained and skilled in pump maintenance and repair. They are ready to respond and assist you by providing fast, expert maintenance and repair services.

For the location of your local authorized Gardner Denver distributor, refer to the yellow pages of your phone directory or contact:

Factory (Tulsa):
Gardner Denver Well Servicing Pumps
4747 South 83rd East Avenue
Tulsa, Oklahoma 74145

Phone: (918) 664-1151
(800) 738-8099

Fax: (918) 664-6225

Service Center (Odessa):
Chaparral
2121 West 44th Street
Odessa, Texas 79768

Phone: (432) 366-5433
(800) 368-1134

Fax: (432) 363-9940

Factory (Ft. Worth):
Geoquip
7533 Kathy Lane
Ft. Worth, Texas 76126

Phone: (817) 249-6400
(800) 824-0271

Fax: (817) 249-6401

INSTRUCTIONS FOR ORDERING REPAIR PARTS

When ordering parts, specify Pump MODEL and SERIAL NUMBER (see nameplate on unit). The Serial Number is also stamped on top of the cylinder end of the frame (cradle area).

All orders for Parts should be placed with the Fort Worth or Tulsa facility.

Where NOT specified, quantity of parts required per pump or unit is one (1); where more than one is required per unit, quantity is indicated in parenthesis. **SPECIFY EXACTLY THE NUMBER OF PARTS REQUIRED.**

LIBERTY EXHIBIT 1016, Page 2

FOREWORD

Gardner Denver® pumps are the result of advanced engineering and skilled manufacturing. To be assured of receiving maximum service from this pump the owner must exercise care in its operation and maintenance. This book is written to give the operator and maintenance personnel essential information for day-to-day operation, maintenance and adjustment. Careful adherence to these instructions will result in economical operation and minimal downtime.

DANGER

Danger is used to indicate the presence of a hazard, which will cause severe personal injury, death or substantial property damage if the warning is ignored.

WARNING

Warning is used to indicate the presence of a hazard, which can cause severe personal injury, death or substantial property damage if the warning is ignored.

CAUTION

Caution is used to indicate the presence of a hazard, which will or can cause minor personal injury or property damage if the warning is ignored.

NOTICE

Notice is used to notify people of installation, operation or maintenance information which is important but not hazard related.

LIBERTY EXHIBIT 1016, Page 3

TABLE OF CONTENTS

Maintain Pump Reliability and Performance with Genuine Gardner Denver Parts and Support Services i

Instructions For Ordering Repair Parts i

Foreword ii

Index iv

List of Illustrations v

Section 1, Danger Notices 1

Section 2, Design, Description and Specifications 9

Section 3, Preparation, Operation and Maintenance 15

Section 4, Service Procedures 21

Section 5, Trouble-Shooting 29

Section 6, Rebuilding Data, Recommended Running Clearances and Torques 35

Warranty 37

LIBERTY EXHIBIT 1016, Page 4

INDEX

Crankshaft Assembly 26

Crosshead Assembly … 25

Crosshead Guide and Stay Rods …..... 26

Daily Routine Maintenance Schedule..... 19

DANGER NOTICES, SECTION 1 1

- Covers and Guards..... 2
- Equipment Moving and Lifting 2
- Flammable, Hot, Cold or Corrosive Fluid Pumping..... 5
- Hammer Lug Fasteners 1
- High Pressure Liquid Jetting, Blasting and Cleaning..... 6
- Pressurized Pump Systems..... 3
- Valve Seat Pulling..... 2

DESIGN DESCRIPTION AND SPECIFICATIONS, SECTION 2..... 9

Fluid End Description..... 13

Fluid End Removal and Installation 21

Fluid End Service..... 21

Foreword ……..…. .. ii

Gear Reduction Components 11, 26

General Requirements and Safety Rules 21

Introduction 9

Lube Pump Suction Piping Sizing and Requirements..... 16

Lube System Pump..... 16

Lubrication, Plunger / Packing 17

Monthly Routine Maintenance Schedule 19

Oil Stop Head Seal Retainer and Gear Covers..... 24

Ordering Instructions, Repair Parts I

Performance Rating..... 14

Periodic Routine Maintenance Schedule 18

Plunger / Packing Lubrication..... 17

Plunger Packing Lubrication Recommendation Chart..... 20

Plungers and Packing Replacement 22

Power End 10,24

Power End and Gear Reduction Components Lube System..... 12

Power End Lubrication System 16

Preparation after Shipping and Storage 15

PREPARATION, OPERATION AND MAINTENANCE, SECTION 3..... 15

Pump Design 10

Pump Mounting Instructions..... 15

Quarterly Routine Maintenance Schedule..... 19

Rebuilding Data 35

REBUILDING DATA, RECOMMENDED RUNNING CLEARANCES AND TORQUES, SECTION 6 35

Recommended Running Clearances 35

Repair Parts, Ordering Instructions i

SERVICE PROCEDURES, SECTION 4 21

Specifications, General..... 14

Startup and New Pump Run-In Procedure..... 17

Torques..... 36

TROUBLE-SHOOTING, SECTION 5 29

Warranty 37

Valve and Seat Replacement..... 23

LIST OF ILLUSTRATIONS

Figure #	Description	Page
Figure 2-1	GD-2500Q Quintuplex Pump	9
Figure 2-2	GD-2500Q Power End Section View	10
Figure 2-3	GD-2500Q Power End Rear Section View	11
Figure 2-4	GD-2500Q Gear Reduction Components	12
Figure 2-5	GD-2500Q Fluid End	13
Figure 3-1	Lubricant Recommendations	17
Figure 4-1	GD-2500Q Fluid End Tightening Sequence	22
Figure 4-2	Typical Packing Assembly	22
Figure 4-3	Fluid End Valve Stop	24
Figure 4-4	GD-2500Q Crosshead Assembly	25

SECTION 1
DANGER NOTICES

DANGER

Read and understand the following DANGER NOTICES before moving or operating the pump or any pump package unit equipment.

Reciprocating pumps are machines capable of producing high fluid pressures and flow rates and are designed to be used with proper care and caution by trained, experienced operators. **TO AVOID PERSONAL INJURY, DEATH AND/OR EQUIPMENT DAMAGE, READ AND THOROUGHLY UNDERSTAND THE FOLLOWING DANGER NOTICES PLUS THE ENTIRE OPERATING AND SERVICE MANUAL BEFORE ATTEMPTING TO MOVE OR OPERATE THE PUMP.** Contact a Gardner Denver service representative if you are unable to comply with any of the danger notices or procedures described in these documents.

Closely examine the pump performance data upon pump delivery to become thoroughly familiar with the operating limits for this pump model. **The pump must <u>never</u> be operated at speeds, pressures or horsepower exceeding the maximum values or at speeds below the minimum. Failure to observe the operating limits could result in personal injury, death, and/or equipment damage and will void the warranty.** Alterations to the pump, or application of the pump outside the limits, must not be made without Gardner Denver written approval, together with a new set of performance data, as dangerous operating conditions could result.

Keep in mind that full operator attention and alertness are required when operating high pressure pumping equipment. Operators should not begin or continue operations when tired, distracted or under the influence of alcohol or any type of prescription or nonprescription drugs.

The timely replacement of expendable parts and any other worn or damaged parts can prevent equipment damage and possible injury. The original parts used in Gardner Denver pumps are designed and tested to exacting standards to provide high quality performance and durability. Your best insurance in maintaining these characteristics is to use genuine Gardner Denver replacement parts.

A broad range of danger notices are covered on these pages, however, they cannot substitute for training, experience and common sense in the safe operation of high pressure pumping equipment.

<u>HAMMER LUG FASTENERS</u>

DANGER

On pumps equipped with hammer lug unions and/or hammer lug valve covers the following precautions must be observed to avoid personal injury, death and/or equipment damage due to contact with the hammer, broken parts from the hammer, lugs or other objects propelled by hammer blows. When tightening or loosening hammer lug unions and valve covers, operators or maintenance personnel should:

- Inspect the hammer and hammer lugs to insure they are all in good condition. Replace any of these parts which are cracked, damaged or badly worn.
- Wear safety shoes and safety glasses.
- Alert other personnel to move away from the area.
- Check to insure they have safe footing.
- Fully engage the hammer bar, if one is used, to prevent it from disengaging violently from the cover as a blow is struck.
- Wipe their hands and the hammer handle and maintain a firm grip on the

LIBERTY EXHIBIT 1016, Page 7

handle to avoid losing control of the hammer while swinging and striking.

- Carefully swing the hammer to avoid striking themselves, another person and objects other than the targeted lugs or hammer bar.

- Avoid swinging the hammer above shoulder height.

VALVE SEAT PULLING

DANGER

The following precautions must be observed by operators and maintenance personnel to avoid personal injury, death and/or equipment damage from contact with the puller, hammer, wedge or broken parts from these components when using either a hydraulic or wedge valve seat puller. Operators or maintenance personnel should:

Hydraulic Seat Puller

- Wear safety shoes and glasses.

- Chain or tie the jack down as it will jump violently when the valve seat disengages from the valve deck.

- Check to insure the pressure applied by the hydraulic pump does not exceed the hydraulic ram maximum pressure rating.

Wedge Seat Puller

- Grind off any mushroomed material from the wedge before use.

- Inspect the hammer and wedge to insure they are in good condition. Replace any of those parts which are cracked, damaged or badly worn.

- Wear safety shoes and goggles.

- Check to insure they have safe footing.

- Fully engage the wedge to prevent it from disengaging violently from the cover as a blow is struck.

- Wipe their hands and the hammer handle and maintain a firm grip on the handle to avoid losing control of the hammer while swinging and striking.

- Carefully swing the hammer to avoid striking themselves, another person and objects other than the targeted wedge.

- Avoid swinging the hammer above shoulder height.

COVERS AND GUARDS

DANGER

Personal injury, death and /or equipment damage can result from contact with moving parts. All moving parts must be equipped with covers and guards. All covers and guards must be securely positioned at all times when the unit is in operation.

Covers and guards are intended to not only protect against personal injury or death, but to also protect the equipment from foreign object damage

EQUIPMENT MOVING AND LIFTING

DANGER

Heavy equipment including pumps, pump packages and components should only be moved or lifted by trained, experienced operators, who are physically and mentally prepared to devote full attention and alertness to the moving and lifting operations. An operator should be fully aware of the use, capability, and condition of both the equipment being moved and the equipment being used to move it.

DANGER

Failure to follow safe and proper pump, pump package or component lifting or moving procedures can lead to personal injury, death and /or equipment damage from shifting, falling or other unexpected or uncontrolled equipment movements.

Make sure the hoist, lift truck, ropes, slings, spreader bar or other lifting equipment you are using is in good condition and has a rated lifting capacity equal to or greater than the weight being lifted. Lifting devices must be checked frequently for condition and continued conformance to rated load capacity. They should then be tagged with the rated capacity together with the date of inspection.

Fully assembled pumps and pump packages are heavy and should only be moved using the specified lifting lugs or attachments.

Many individual components have lifting eyes or lugs, which must not be used to lift assemblies, as they are designed to bear the weight of the component only.

Before lifting the individual component check to insure the lifting attachment is firmly secured to the component with undamaged, properly torqued fasteners, sound welds, or other secure attachments. Examine the lifting eyes, lugs, slots, holes or other projections to insure they are not cracked, otherwise damaged or badly worn. The repair of existing or addition of new welded lifting eyes, lugs or other projections should only be performed by experienced, qualified welders.

Package units should be lifted with spreaders connected to the lifting attachments normally built into the package unit support skid. Packages too large to lift as fully assembled should be separated into smaller loads.

For these smaller loads the lifting devices should be fastened to the lifting attachments normally built into the individual motor, engine, pump or transmission / torque converter, or their separate support skids.

When lifting sub-assembled components, for example a suction stabilizer attached to suction piping or a discharge pulsation damper attached to a strainer cross and piping, use special lifting slings designed to safely support the combined weight of the components.

If a crane or hoist is being used to lift large components or assemblies, one or more persons should assist the operator from the ground with guide lines attached to the equipment being moved to properly position it and prevent uncontrolled movement.

When you start to lift a pump, package unit, subassemblies or individual components and you observe the equipment is tilting, or appears unbalanced, lower the equipment and adjust the lifting device to eliminate these improper lifting conditions before proceeding to move the equipment.

It is poor practice and dangerous to allow the equipment to pass over or close to your body or limbs. Be prepared to move quickly out of danger if equipment starts to fall, slip or move unexpectedly toward you.

PRESSURIZED PUMP SYSTEMS

DANGER

Fluids under high pressure can possess sufficient energy to cause personal injury, death and/or equipment damage either through direct contact with escaping fluid streams or by contact with loose objects the pressurized fluid propels.

Operating a pump against a blocked or restricted discharge line can produce excessive pressures in the entire discharge

system, which can damage or burst discharge system components.

DANGER

Never operate a pump without a properly sized pressure relief valve or working overpressure shutdown in the discharge line immediately adjacent to the pump discharge.

The relief valve should be placed in the flowing discharge line and not at the opposite end of the discharge manifold in a dead end connection. The dead end may become clogged with solid material carried in the fluid, which could prevent proper relief valve operation.

DANGER

Never place a shut-off valve or any other component between the pump discharge connection and the pressure relief valve.

Make sure the pressure relief valve is installed so any pressurized relief discharge from the valve is directed away from possible contact with people or equipment. The relief valve must be set to relieve at a pressure equal to or below the maximum pressure values shown on the pump data plate. However, if a component is used in the discharge system with a lower rated pressure capability than that listed on the pump data plate, the pressure relief valve must be set to relieve at a pressure equal to or below the rated capability of the lowest rated component.

Before starting the pump every time, check to insure:

- The pressure relief valve is in good operating condition and has been set to the proper relief pressure.
- Any pipe line used to direct pressurized relief flow to another location, such as a collecting tank, is not blocked.
- The discharge system is not blocked and all the discharge line valves are open.

Check all fluid end discharge system components including pipes, elbows connections, threads, fasteners, hoses, etc., at least once every six months to confirm their structural adequacy. With time, wear, corrosion and fatigue can reduce the strength of all components. Magnetic iron and steel components should be checked with magnetic particle or dye penetrates crack detection equipment. Nonmagnetic materials should be checked for cracks with dye penetrates. All metallic components should also be visually checked during these inspections for signs of corrosion. If a component shows evidence of cracking or loss of material due to corrosion it must be replaced with a new part.

Continually monitor suction and discharge hose assemblies when the pump is operating for leakage, kinking, abrasion, corrosion or any other signs of wear or damage.

Worn or damaged hose assemblies should be replaced immediately. At least every six months examine hose assemblies internally for cut or bulged tube, obstructions and cleanliness. For segment style fittings, be sure that the hose butts up against the nipple shoulder, the band and retaining ring are properly set and tight and the segments are properly spaced. Check for proper gap between nut and socket or hex and socket. Nuts should swivel freely. Check the layline of the hose to be sure that the assembly is not twisted. Cap the ends of the hose with plastic covers to keep them clean until they are tested or reinstalled on the pump unit. Following this visual examination, the hose assembly should be hydrostatically tested, on test stands having adequate guards to protect the operator, per the hose manufacturer's proof test procedure.

Fluid end component inspections should be performed more frequently than every six months if pressures above 2500 psi are used in the discharge system or if corrosive, abrasive, flammable or hot (over 110º F) fluids are being pumped.

Proper stuffing box packing selection is important for safe pump operation. Contact a Gardner Denver service representative for assistance in selecting the proper packing before beginning operation.

Before starting the pump the first time, and periodically thereafter check the pump, suction and discharge system fastener torque versus the values listed on page 35 to insure proper tightness. Over and under torquing can damage threaded pipes, connections and fasteners, which may lead to component damage and/or failure. Replace all components found to be damaged or defective. On pumps equipped with stuffing boxes, the gland must be engaged by at least three (3) threads to hold the discharge pressure of the pump.

DANGER

Do not attempt to service, repair or adjust the plunger packing or otherwise work on the pump while the unit is operating. Shut off the pump drive engine and relieve the fluid pressure in the suction and discharge systems before any work or investigation is performed on the pump or pump systems.

Block the crankshaft from turning and make certain that all pump drive motor or engine start switches or starter controls are clearly tagged with warnings not to start the pump while repair work is in process.

Whenever the pump is operating, continually monitor the entire suction, discharge and pump lubricating systems for leaks. Thoroughly investigate the cause for leakage and do not operate the pump until the cause of the leak has been corrected. Replace any parts which are found to be damaged or defective. When a gasketed joint is disassembled for any reason, discard the used gasket and replace it with a new, genuine Gardner Denver gasket before reassembling the joint.

Due to the high working pressures contained by the fluid end, discharge manifold and discharge piping, welding on these components is not recommended. If welding on the discharge system cannot be avoided, only experienced, qualified welders should be used. In addition, the welded part should be hydrostatically proof tested in the shop with water or hydraulic fluid to one and one half times maximum discharge system working pressure, with no observable fluid leakage, before the part is reinstalled in the pump system.

In summary, high pressure fluid streams can possess sufficient energy to cause personal injury, death and/or equipment damage. These results can occur either through direct contact with the fluid stream or by contact with loose objects the fluid stream has propelled, if the pump system is improperly used, or if the fluid is misdirected, or allowed to escape from defective or improperly maintained equipment.

FLAMMABLE, HOT, COLD OR CORROSIVE FLUID PUMPING

DANGER

Extreme caution must be exercised by trained and experienced operators when flammable, hot, cold or corrosive fluids are being pumped to avoid personal injury, death an/or equipment damage due to explosion, fire, extreme cold or chemical attack.

Never operate a pump that is pumping hydrocarbons or other flammable, hot, cold, or corrosive fluids when any part of the pump, suction system or discharge system

is leaking. Stop the pump immediately if any leakage, other than a few drops per minute of packing seepage, is observed. Keep all flame, sparks, or hot objects away from any part of the pump, suction system, or discharge system. Shield the pump, suction system and discharge system to prevent any flammable, hot, cold or corrosive fluid leakage from dripping or spraying on any components, flame, sparks, hot objects or people. Inspect the plungers, packing, gaskets and seals for fluid leakage frequently and replace all worn or leaking parts.

Selection of the proper gaskets, seals and stuffing box packing is even more critical when flammable, hot, cold or corrosive fluids are being pumped than when other, inherently less dangerous fluids are used. Contact a Gardner Denver service representative for assistance in selecting the proper gaskets, seals and packing before beginning operation.

Since some packing seepage into the cradle area is inevitable, a drain pan located at the bottom of the cradle must be connected to a drain line which conducts the fluid leakage to a collection container located in a protected area. The entire drain system and container must be constructed of materials resistant to attack from the pumped fluid or from explosion or fire of the pumped fluid.

Before beginning pumping operations or starting the pump power source (whether an engine or electric motor) check the atmosphere all around the pumping site for the presence of flammable or explosive vapors. Do not begin operation and stop ongoing operation if flammable or explosive vapors are detected. Hot surfaces, sparks, electric current or engine exhaust could ignite flammable or explosive vapors. Each engine used as a power source on pumping units where flammable or explosive vapors could form should be equipped with an air inlet shut-off. If flammable or explosive vapors are present in the pumping site atmosphere, an engine could continue to run on these vapors even after the engine fuel line is shut-off if an air inlet shut-off is not used.

In addition, on pumping units used where flammable or explosive vapors could form, all electric motors used as power sources must be of explosion proof construction and all electrical components and wiring must meet the current National Electrical Code for explosive atmospheres.

These precautions must be taken to avoid possible personal injury, death and/or equipment damage from explosion, fire or burns.

HIGH PRESSURE LIQUID JETTING, BLASTING AND CLEANING

DANGER

Extreme caution must be exercised if any type of wand, gun, nozzle or any other pressure and flow-directing device is attached to the pump discharge system for use in jetting, blasting, cleaning, etc. This type of equipment must be used by trained, experienced operators with the utmost care. High-pressure fluid streams can either by direct contact or by propelling loose objects, cause serious personal injury or death to operators and/or other persons.

Pressure or flow directing devices often receive pressurized flow through flexible hoses, which can burst if they are kinked, cut, abraded or are otherwise worn, damaged or pressured above their rated capacity. Protect the hose and connections from damage by people, objects and vehicles. A broken, cut or otherwise burst hose can release pressurized fluid, which may cause personal injury, death and/or equipment damage.

High pressure fluid from hand held or hand directed pressure and flow directing devices may overpower an operator's ability to control or direct the device, which could lead to personal injury, death and/or equipment damage. The operator must brace against

the backward thrust of a hand held device. In addition, a safety harness or safety net must be used when working in an area where the operator could be injured in a fall. Stand to the side of any tubing or container being sprayed to avoid back spray and never operate a hand held device above shoulder level.

Never direct the pressurized fluid stream at yourself or any other person, control valves, the pump, pump drive, suction or discharge systems. The pressurized stream can cause serious personal injury or death and can also change valve or control settings which could dangerously increase the delivery pressure to the pressure and flow directing device.

When operating a pressure and flow directing device, use only equipment which automatically shuts off flow when an operator releases hand or foot pressure on the pressurized flow trigger control to prevent injury if the operator is overpowered or becomes disabled.

Check to insure this automatic shut-off equipment is operating properly before every use and never circumvent the automatic shut-off for any reason or by any means when operating the equipment.

When operating any type of high pressure liquid jetting, blasting or cleaning devices, the operators must always wear protective clothing including, but not limited to, a hard hat with full face visor, heavy duty rain coat and pants, boots with nonskid sole and safety toe, rubber gloves with rough grip surface and ear noise protection.

Full operator attention and alertness are required when operating this equipment to avoid personal injury, death and/or equipment damage. The operators should take frequent rest breaks and cease operations when they become tired or distracted.

Before the equipment is started, the work area must be inspected and properly prepared to avoid personal injury, death, and/or damage to equipment. Make sure the work area is checked for hazardous fumes, has adequate ventilation for engine exhaust and sufficient drainage for released fluid. Check the work area for electrical equipment, connections, outlets, fixtures, or lines. If any are present they must be made watertight and the electrical power to these devices must be shut off to avoid electrical shocks from fluid contact. The work area should be clearly marked and roped off to keep unauthorized people and vehicles from entering. Remove all loose parts, tools and equipment from the work area before beginning operation.

All pressure containing devices including wands, nozzles, guns, hoses, connections, etc., should be regularly checked for condition. These components should all be tagged with their tested pressure capabilities together with the date testing was performed. **Always be aware of the pressure level in the system and never connect any equipment to the system which has a rated or tested pressure capability below the system operating pressure.** The equipment must be shut down and the system pressure released before changing or disconnecting wands, nozzles, guns, hoses, connections or any other pressurized system components.

All pressure containing devices including wands, nozzles, guns, connections, etc., plus all automatic shut-off, pressure and control equipment should be treated with care. Protect them from damage by people, objects and vehicles. **Never** lay them in dirt, mud, ice or other loose material that could plug the fluid opening or interfere with their operation. **Never** use the wand, nozzle, gun, etc. to pry loose material off items being cleaned.

Before starting operation in a cold environment, check to make sure there is no ice in the fluid system and repeat this inspection each time before operation is restarted.

Before purchasing wands, nozzles, guns, connections, hoses, etc., manufacturers of these components should be contacted for detailed information on the design and

safety features incorporated in their products. After careful study of various manufacturers products, we recommend that **only** those wands, nozzles, guns, connections and hose, etc., be considered for purchase that you judge to offer the highest quality of design, construction and safety, since these components are among the most critical to the safe operation of high pressure liquid jetting, blasting and cleaning equipment.

After you have selected and purchased these components, follow the manufacturer's instructions completely in their use.

In summary, high pressure jetting, blasting and cleaning are inherently dangerous, as the pressures and flow rates needed to remove scale, clean, etc. are sufficient to cause personal injury, death, and/or equipment damage resulting from, but not limited to, any of the conditions described in the above Danger Notices.

SECTION 2
DESIGN, DESCRIPTION AND SPECIFICATIONS

INTRODUCTION

The new Gardner Denver GD-2500Q is a high horsepower, high rod load multi-purpose pump for various applications such as oil and gas well fracturing and acidizing and potentially as a light weight drilling pump. The pump was designed using modern analytical and engineering methods and techniques. The gear drive was designed in accordance with the most recent standards, procedures, and computer software developed by American Gear Manufacturers Association.

The issue of personnel safety is the most important topic covered in this manual. Therefore, in the beginning of this manual the user is introduced to dangers inherent in the operation of a high-pressure pump. To avoid accidents and injuries, all safety rules listed in this section and also all other applicable safety rules and regulations must be carefully observed.

The sections on Pump Design, Description, and Specifications, describe the pump design, list the pump specifications, and present drawings depicting the pump external views and all essential cross-sectional drawings.

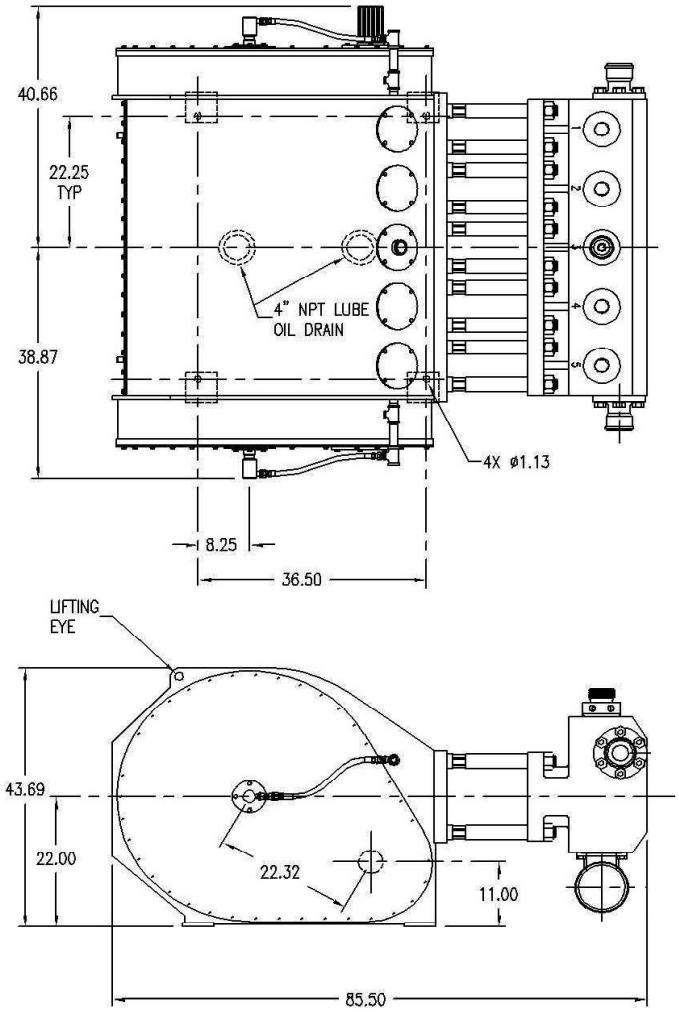

FIGURE 2-1: GD-2500Q Pump

Section 3, "Pump Preparation, Operation, and Maintenance," addresses the issues of preparing the pump for operation after shipping or storage, the lubrication system design and specifications, the new pump run-in procedures, and the periodic routine maintenance schedule. The recommended oils, viscosity data, and crankcase oil temperature requirements are also presented in this section.

Section 4, "Service Procedures," describes the various assembly / disassembly procedures.

Section 5, “Trouble–Shooting,” describes possible problems, causes and solutions related to pump performance.

Section 6, “Rebuilding Data, Recommended Running Clearances and Torques,” presents information useful for pump rebuilding and assembly, including dimensional and tolerance data, running clearances for all bearings, and recommended fastener torques.

PUMP DESIGN

The GD-2500Q quintuplex pump uses only two major assemblies: power end and fluid end. The gear reducer is located inside the power end. The pump is designed with a modular concept. Each assembly is a module that can be assembled, handled, installed, fixed, or transported separately from the rest of the pump (See FIGURE 2-1, page 9). The following is a brief description of the essential design features for each modular assembly.

POWER END (FIGURE 2-2,FIGURE 2-3)

The power end design is a fabricated steel frame made from high-strength low-alloy steel plate, joined by heavily welded cross-members to provide stiffness and strength. This design concept provides maximum durability with minimum weight.

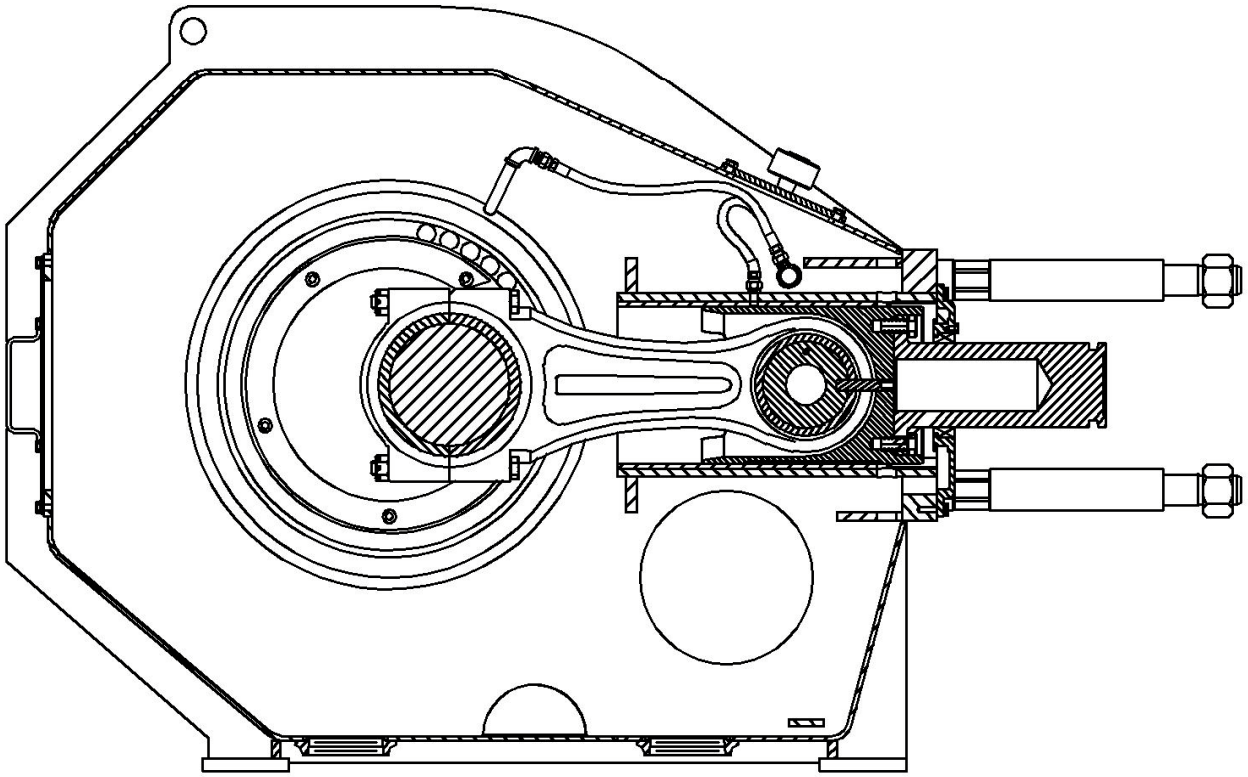

FIGURE 2-2 GD-2500Q Power End Section View

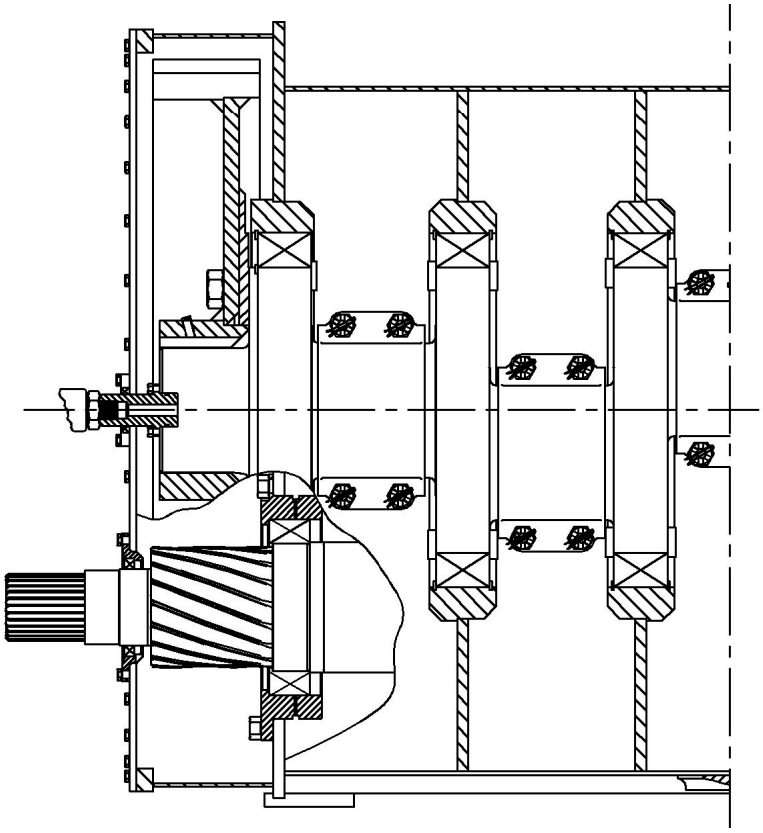

FIGURE 2-3: GD-2500Q Power End Rear Section View

NOTICE
The direction of rotation must be such that the top side of the crankshaft is moving toward the fluid end.

The crossheads and crosshead-guides are full-cylindrical design for minimum PV loading and maximum lubrication. The connecting rods are automotive type. The connecting rods are accessible through the rear of the pump, and the crossheads through the nose or front of the pump. The crankshaft is a forged steel automotive type crankshaft with six cylindrical roller-bearing mains. The main bearings consist of four floating and two outside held bearings. The connecting rod bearings are automotive journal bearings, and the wrist-pin bearings are hi-alloy bronze journal bearings.

The crankshaft and crossheads are on the same centerline. The fluid end is held in place and in alignment with the power end by the twenty (20) stay-rods. (See FIGURE 2-1).

The power end is fully enclosed to contain the power end oil, collecting the oil and draining out the bottom skin through two NPTF weld-let connections. This is a dry-sump pump. An external oil sump and lube pressure and filter system is required.

GEAR REDUCTION COMPONENTS (FIGURE 2-4)

The internal gear reduction consists of two helical bull-gears located on either end of the crankshaft, and one input pinion shaft with helical pinion gears on each end. The overall ratio of the reduction gear unit is 6.353:1 This arrangement offers a good power to weight ratio and flexibility in using different prime movers such as diesel engines as well as electric motors. All gears are heat-treated, hardened, and ground to AGMA quality level 10 or better to insure the highest reliability and long life of the gear box.

POWER END AND GEAR REDUCTION COMPONENTS LUBE SYSTEM (FIGURE 2-2, FIGURE 2-3, and FIGURE 2-4,)

Both the internal gear reduction components and the power end have one common lube oil inlet. The power end inlet is located on the side of the pump forward of the gear cover. The inlet is a NPTF tee that divides the lube flow between the lube manifold for the main bearing and crosshead guide area and the rotary unions. Pressurized lubrication for each crosshead is delivered from the lube manifold to the top of the crosshead guides. An aluminum cover houses the rotary union, which is attached to the crankshaft. Lubrication for the rotating power end components comes from forced lube through the crankshaft. Lube oil enters the crankshaft and first lubricates the connecting bearings. Oil from the connecting rod bearing also lubes the wrist-pin bearing. As oil reaches the first crankshaft journal, oil exits the journal oil hole and lubes the journal and journal bearings, passes through the center of the connecting rod to the wrist pin and wrist-pin bearing. It also connects to the crosshead oil supply, giving a redundant oiling pathway. This is repeated for the rest of the main bearing and crosshead components.

Oil is removed from the power end through two primary drain connections in the bottom of the frame. Oil passages at the forward part of the frame members allow the crosshead cylinders to drain to the power end sump. Oil is also drained from the gear covers through drain holes in the outside frame plates. These drains are all combined together and empty into the main drains in the bottom of the pump frame. From here, it exits to an external oil sump (supplied by others).

The two main bull-gears are oiled by spray-bars located inside the gear covers. These spray-bars are connected externally to the oiling system through oil hoses. These spray bars, nozzles, and orifices provide not only lubrication for the gears and pinions, but also provide a vehicle to carry away the generated heat built up by the heavy loading of the gears and pinions, along with the pinion bearings and other load carrying components.

NOTICE

It is extremely important to maintain some downward slope in the entire drain system back to the lube reservoir.

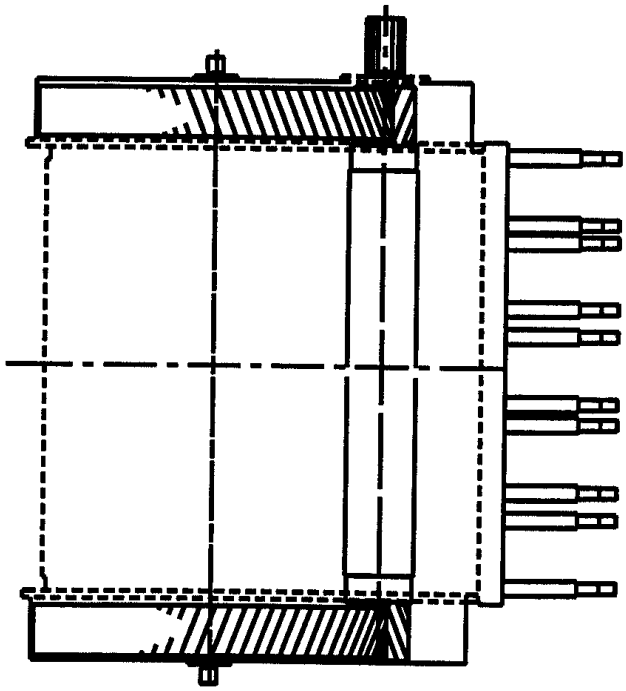

FIGURE 2-4: GD-2500Q Gear Reduction Components

FLUID END (FIGURE 2-5)

This fluid end incorporates the traditional flange-mounted fluid end design, which simplifies installation and removal by simply removing of the stay-rod nuts. These stay-rod nuts must be made-up tight and remain tight during operation. (See Torque Requirements on page 36). Plungers are installed and removed through the front suction covers. Plunger packing is accessible by removal of the packing nut or gland. Plunger packing lube holes are provided in the fluid cylinder.

The conventional fluid end **V**alve-**O**ver-**V**alve configuration offers field a proven arrange-ment in terms of the valve and spring performance. Improvements in the fluid end life come from increasing fluid cylinder cross sections in areas of maximum stresses by reducing internal dimensions through the use of the twist-type valve stop. New sophisticated methods of metallurgical control allow us to obtain steels with very consistent chemical compositions and mechanical properties. These forgings have higher tensile, yield, hardness and low-temperature impacts than conventional forgings.

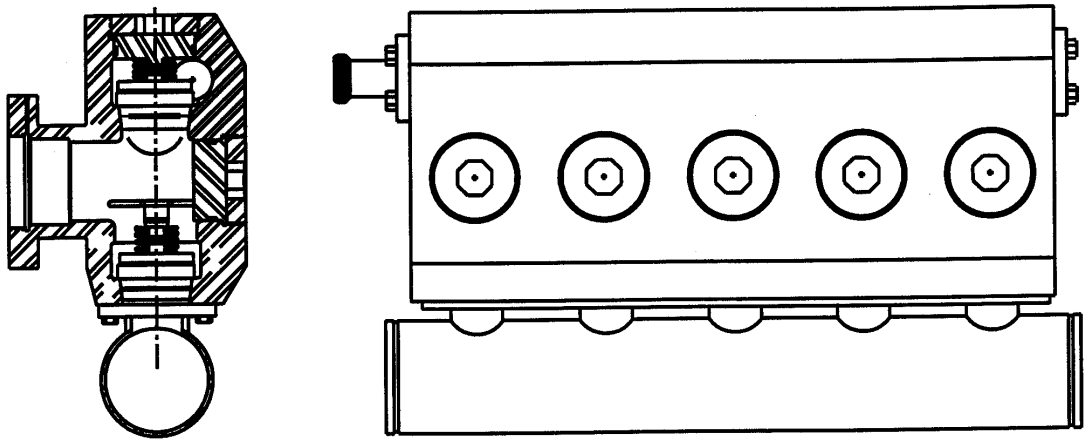

FIGURE 2-5: GD-2500Q Fluid End

GENERAL SPECIFICATIONS

This section presents the pump basic specifications. The first set of specifications deals with the pump's power, rod load, plunger stroke, and overall dimensions. The other table presents allowable pressures and flows for various pump speeds along with data on power requirements.

GD-2500Q PERFORMANCE RATING

Rated Brake Horsepower	2500bhp
Stroke Length	8.0 inches
Maximum Rod Load	196,350 lbs.
Gear Box Ratio	6.353 : 1
Overall Length	86.25 in.(max.)
Overall Width	74.25 inches
Overall Height	43.69 inches
Weight (system dry)	14,570 lbs.

Plunger Size	Displacement per Revolution	Displacement at Pump RPM - Well Stimulation Application							
		100		150		250		330	
in.	**gal/**								
	rev.	**GPM**	**PSI**	**GPM**	**PSI**	**GPM**	**PSI**	**GPM**	**PSI**
3.75	1.91	191	17800	287	13500	478	8100	631	6100
4	2.17	217	15600	326	11800	544	7100	718	5400
4.5	2.75	275	12400	413	9300	688	5600	908	4200
5	3.40	340	10000	510	7600	850	4500	1121	3400
5.5	4.11	411	8300	617	6300	1028	3800	1357	2800
5.75	4.49	449	7600	674	5700	1124	3400	1483	2600
6	4.89	489	6900	734	5300	1223	3200	1615	2400
6.5	5.74	574	5900	861	4500	1436	2700	1895	2000
6.75	6.19	619	5500	929	4200	1548	2500	2044	1900
Input Power	BHP	2200		2500		2500		2500	

SECTION 3
PREPARATION, OPERATION AND MAINTENANCE

DANGER

Read and understand clearly all safety rules and precautions before attempting to operate the pump.

This section deals with pump preparation after shipping and storage of the pump, user built lubrication system and its specifications, pump break in procedures, recommended oils, allowable crankcase operating tempera-tures, viscosity conversion tables, and routine maintenance schedule.

PREPARATION AFTER SHIPPING AND STORAGE

All pumps are shipped dry and therefore must be flushed with light weight oil before operating. The flushing must be performed regardless of method or duration of the shipment or type of container the pump was shipped in.

Pumps are not prepared for storage and should be put in service as soon as possible.

If for any reason the pump has to be put into storage after prior use, the following procedure should be followed:

1. Clean and flush the fluid end with a rust preventative.
2. Plug all discharge and suction openings.
3. Drain oil from the power end and the gear reduction unit through bottom drains.
4. Flush the power end with a rust preventative (before flushing make sure that the rust preventative will not clog the oil passages).
5. Remove the breather and either plug or tape the opening.
6. Coat the gear reducer input shaft and all exposed bare metal with a heavy rust preventive.
7. Plug drain holes at the bottom of the pump frame, located underneath the pump along the centerline.
8. Plug the lube inlets.
9. Store the pump inside in a warm dry place.
10. If the pump is shipped ocean cargo, it must be crated in a water-tight contain-er placed below the deck to prevent rusting and salt water contamination.

PUMP MOUNTING INSTRUCTIONS

Follow this procedure to shim the feet of the pump. This will require the use of (4) Grade 8, 1” hex head screws with lock washers and nuts to secure the pump frame.

1. Set the pump in its location.
2. Install one bolt in each of the two feet at the rear corners of the power frame. Snug but do not tighten these bolts.
3. The fluid end suction and discharge connections should be disconnected for this procedure.
4. Using a feeler gauge, check under the two feet at the rear of the frame and the two at the front of the frame for clearance.
5. Select the proper number and thickness of shims to fill the gap under the high foot.
6. With shims in place (if required), install bolts in the remaining power frame mounting feet.
7. Tighten all four bolts. Use the appropriate torque for the type of bolts. (See torque table on page 36.)

8. When connecting the suction line to the suction manifold, provide support to the suction line independent of the pump suction manifold. Fluid adds weight to the suction line.

9. The use of suction stabilizers is always recommended.

10. The discharge line should include swivels for flexibility (or hose). Support the discharge line, and tie it down with vibration isolators.

POWER END LUBRICATION SYSTEM

Due to the variety of applications and drive arrangements, the power end lubrication pump and applicable auxiliary hydraulic equipment are not furnished with the quintuplex pump. This pump is designed to operate with an external oil sump of 75 gal. min. capacity.

The lubrication system is very critical to the quintuplex pump performance and therefore should be professionally designed in accordance with sound engineering practices developed for similar systems, known otherwise as hydraulic power units or HPU. The following discussion will reemphasize some of the good practices used in designing similar systems in the past and comment on the system's critical components.

Lube System Pump

A positive displacement pump must be used. Gear type pumps have demonstrated reliable performance for similar applications in the past. The pump should have the largest suction port available for the selected pump size to minimize losses in the suction piping.

Lube Pump Suction Piping Sizing and Requirements

In the past, failure to meet these requirements has lead to pump damage because of restricted oil flow in the lube pump inlet. Therefore, the following guidelines, developed as a result of long experience, should be adhered to closely.

1. The oil flow velocity through the suction piping should not exceed 2 ft/sec.

2. At maximum operating speed the vacuum reading at the lube pump inlet must be no more than 8" hg or 4 psi or 0.28 bar.

3. The suction strainer should be sized for oil flow three (3) times larger than the actual flow passing through the strainer.

4. The suction pipe should be kept as short as possible and free of bends.

5. Warning devices to monitor lube oil pressure and temperatures are highly recommended. The quintuplex pump operates at very high rod loads and pressures, and malfunction of the lube system may result in serious damage occurring in a very time. Therefore, early warning devices are essential to the successful operation and should be set according to the following operating limits:

NOTICE

Maximum lube system pressure should be set at 125 psi max. (relief valve setting.)

Minimum lube oil operating pressure is 40 psi. (with hot oil).

Minimum lube pump flow is 30 gpm. Approximate lube pump design flow should be 40 gpm, with relief valve controlling flow.

Maximum lube system vacuum at lube pump inlet 8 Hg or 4 psi or 0.28 bar.

FIGURE 3-1 indicates API-GL5 oil grades recommended for use in the pump power end and the gear reducer lube system. Crankcase operating temperature ranges and minimum startup temperatures for each listed grade of oil for various inlet or sump temperature ranges.

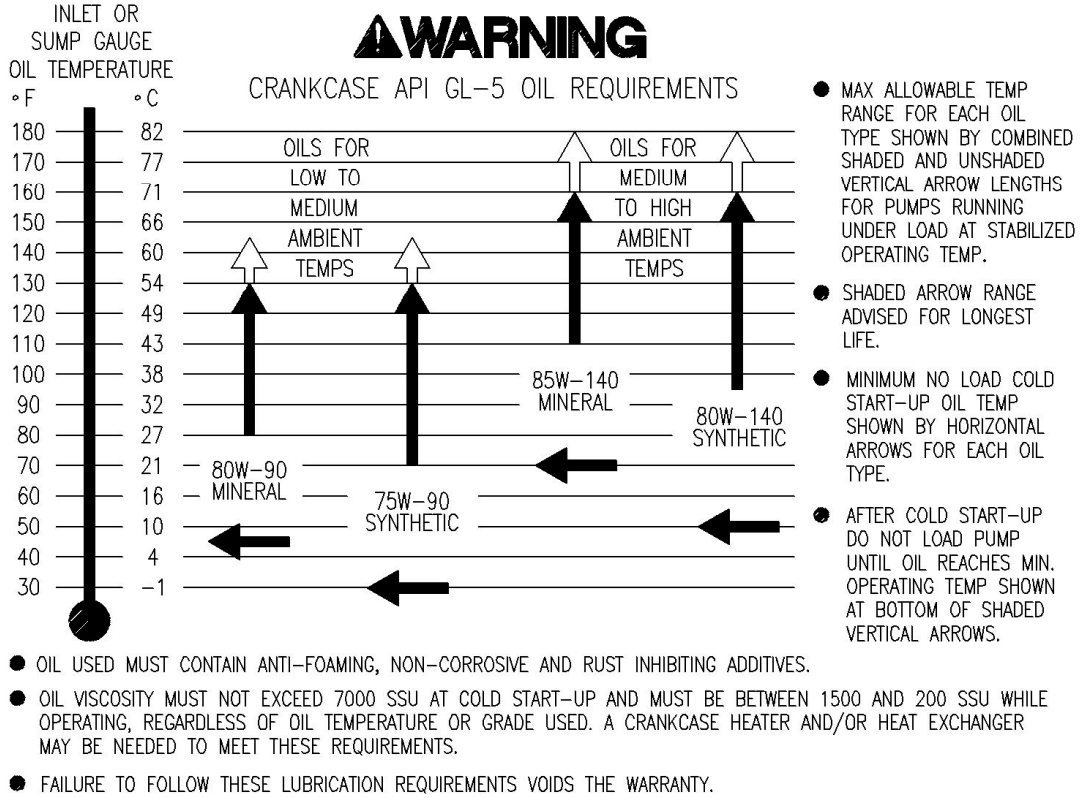

FIGURE 3-1 Lubricant Recommendations

PLUNGER / PACKING LUBRICATION

The fluid end plungers are lubricated from a separate lubrication pump through the stuffing box. The lubrication pump, hosing, and check valve to the stuffing box is not provided with the unit.

See "Plunger Packing Lubrication Recommendation Chart," page 20, for a list of lubricants recommended for plunger /packing lubrication.

STARTUP AND NEW PUMP RUN-IN PROCEDURES

A centrifugal charge pump will be required to charge the fluid end suction manifold. The charge pump should be sized according to the volume to be pumped by the quintuplex pump so that there is no less than 50 psi charge when the quintuplex pump operates at its maximum flow.

The first startup and several hours of the pump run-in are performed at the factory during the acceptance tests as a part of quality assurance procedure. However, the new pump break-in period process may continue for the first 80-100 hours of operation, and therefore it will be each user's responsibility to perform all the tasks related to this critical period. As all moving parts of the pump go through wearing-in process, steel and bronze wear particles are carried by the oil flow in the lubrication system. The resulting contamination of the lubrication system with the wear particles and especially clogging of the strainer and the oil filter may cause serious problems. To assist the user the following guidelines are presented for the maintenance personnel to follow during the critical startup and break-in period:

1. Fill the lube oil reservoir with recommended grade of oil. See "Power End Lubrication," and FIGURE 3-1, page 17.

2. Fill the packing lube reservoir with proper oil. See "Plunger/Packing Lubrication Recommendation Chart," page 20.

3. Remove all inspection covers on the top of the pump frame.

4. Start the engine at the lowest possible RPM and the quintuplex pump at zero (0) pressure. Make sure that all roller bearings, crossheads, knuckle joints, and crankshaft bearings are properly lubricated.

5. Increase the engine RPM to maximum and check whether the vacuum reading at the lube pump suction inlet is less the 8" Hg or 4 psi or 0.28 bar.

6. Check whether the lube system pressure reading is at least 100 psi or 7.0 bar. Temporary pressure gages should also be checked at this time to make sure that all components of the lube system are working properly.

7. Check to see that oil flow back to the reservoir is normal. (There should be no accumulation in the power end.)

8. Start the plunger lube system and check to see whether it is adjusted properly.

9. Run at low speed to "work out" any trapped air in the fluid cylinder with the charge pump operating.

10. Run the pump at 80-90 strokes per minute and 20% of its maximum pressure rating for 30 minutes

11. During this time, observe the suction vacuum gage reading, oil pressure and temperature and check for leaks.

12. Run the pump at 80-90 strokes per min at the following loads:

40% of full rated load	30 min
60% of full rated load	30 min
80% of full rated load	30 min
100% of full rated load	30 min

13. During the operation observe the oil pressure and temperature, and inlet suction vacuum gage reading, and entire system for proper operation.

14. If the quintuplex pump is equipped with a transmission, run the pump for 30 min in each gear in the higher gear ranges pulling full horsepower in each gear. Observe closely oil pressures and temperatures, and lube oil suction vacuum.

15. Shut the pump down and let it cool thoroughly before starting normal operation of the pump.

16. During the shutdown, change the oil filter elements and clean the suction strainer.

17. Change the lube oil and clean the reservoir to get rid of metal particles and any other wear products now present in lube oil system.

18. Change filter elements and clean strainer every 10-15 hours, till it becomes apparent that wear-in process is finished.

19. Tighten all fluid cylinder attachment nuts, procedure listed in "Fluid End Removal and Installation," page 21, after 50-70 hours of pump operation. See FIGURE 4-1, page 22.

20. Change the lube oil again, replace the filter elements, and clean the strainer after 80-100 hours of pump operation.

21. Follow the routine maintenance schedule described in the next section after completion of the wear-in period.

PERIODIC ROUTINE MAINTENANCE SCHEDULE

Performance of the periodic routine maintenance tasks, described in this section, will insure long, economical, and trouble free operation of this pump. It is highly recommended that the customer set up a maintenance program during the run-in period. The periodic maintenance data should be recorded and kept with other pump documents. The following recommendations, based on previous experience, should serve as a guideline for establishing a good maintenance program. The periodic maintenance schedule is divided into daily, monthly, and quarterly

tasks to be performed by the user after the pump has gone through 100 hours of wear-in period. For the tasks performed during the wear-in period, see "Startup and New Pump Run-In Procedure," page 17.

Daily Routine Maintenance Tasks

1. Check the oil level in the lube oil reservoir.

2. Periodically monitor lube oil operating pressure and temperature. Minimum oil operating pressure is 40 psi. The maximum oil operating temperature depends on a particular grade of oil used in the pump lube system. (See FIGURE 3-1, page 17).

3. Check the lube pump suction inlet vacuum. A vacuum gage reading higher than 8" Hg or 4 psi or 0.28 bar indicates that the suction strainer and/or oil filter element are clogged. The strainer must be cleaned, and the oil filter element replaced as necessary as soon as the pump can be shut down for a short period of time to perform these tasks.

4. Listen for any abnormal noise or rough operation, which may indicate the need for fluid end maintenance such as changing valves or valve seats. Due to very high pressures in the quintuplex pump fluid end, worn valves and seats should be changed as soon as possible to prevent washing them out with the pumped fluid.

5. Check the plunger/packing lubrication pump for proper operation. Insure packing nut is tightened sufficiently into stuffing box. Recheck tightness after extended continuous operation.

Monthly (100 hour) Routine Maintenance Tasks

1. Clean the strainer and replace the oil filter element.

2. Check the entire lube system for leaks and eliminate them.

3. Check all fluid end expendables such as valves, packings, and valve seats and replace them as necessary.

4. Check the extension rod seals and replace them as necessary.

Quarterly (300 hour) Routine Maintenance Tasks

1. Change the lube oil and clean the oil reservoir thoroughly.

2. Clean the lube system strainer and replace the oil filter elements.

3. Re-tighten the critical bolt joints following torque specifications given in Section 6.

4. Add grease to any exposed bare metal to prevent corrosion.

5. Clean or replace the breather cap filter element.

6. Check all pressure, temperature, and vacuum gages for proper operation and replace as necessary.

7. Check all lube system warning and alarm devices for proper operation and replace if found defective.

8. Check supply of on hand expendables such as packings, valves and seats, maintenance items such as seals, O-rings, oil and breather filter elements, and also maintenance tools. Order to replenish supplies as necessary.

9. Check bearings and wear surfaces for failure until operating experience justifies longer inspection intervals.

The recommended routine periodic maintenance procedures are very simple and can be performed in a short period of time. At the same time, close adherence to these procedures will insure long, economical, and trouble free operation of the pump.

PLUNGER PACKING
LUBRICATION RECOMMENDATION CHART

ROCK DRILL LUBRICANTS - NORMAL CONDITIONS

Source	Type	Pour Point Maximum
Amoco	Amoco Rock Drill Oil - Light	-20°F
	Amoco Rock Drill Oil - Medium	0°F
Arco	Air Drill #147	0°F
	Arco Trueslide #150	15°F
Chevron Oil U.S.A.	Vistac #68X	10°F
	Vistac #100X	5°F
	Vistac #150X	0°F
Conoco	EP Rockdrill #49, #17, #78	5°F
Gulf Oil (Chevron)	Rockdrill #100	-30°F
	Rockdrill #32	-35°F
Exxon	Arox EP #46	-20°F
	Arox #150	-35°F
Mobil Oil Co.	Almo #525	-20°F
	Almo #527	-20°F
	Almo #529	-10°F
	Almo #532	0°F
Pacer Oil	Rockdrill #150	-10°F
	Rockdrill #600	0°F
Phillips Petroleum	EP #500 (Summer) or EP #300 (Winter)	-10°F
Shell Oil Co.	Torcula Oil #32	-50°F
	Torcula Oil #100	-20°F
	Torcula Oil #150	-15°F
	Torcula Oil #320	-10°F
Sun Oil Co.	Rockdrill 500 (Light)	5°F
	Rockdrill 1000 (Heavy)	5°F
Texaco Oil Co.	Rockdrill Oil XL	-40°F
	Rockdrill Oil XM	0°F
	Rockdrill Oil XH	-10°F
Union Oil of Ca.	Marok 150	------

OPTIONAL PACKING LUBRICANTS

Category	Specification
Motor Oil	10W30
Motor Oil	5W40

SECTION 4
SERVICE PROCEDURES

This section describes various assembly and disassembly procedures necessary for pump servicing or parts replacement. The General Requirements and Safety Rules section is a reminder for the maintenance personnel of the critical importance of safety rules and precautions while working on the pump. Notes on dangers and notices specifically related to service procedures are repeated and placed in this section also.

The pump consists of two major modules: (1) the fluid end and (2) the combination power end and gear reduction components. (See **SECTION 2**) The description of service procedures follows the modular concept. Due to many expendable parts, fluid end servicing is rather common in the field and is therefore presented in the very beginning followed by the power end / gear reduction components servicing procedures.

General Requirements and Safety Rules

DANGER

Before any attempt to work on pumps is made, all safety rules and precautions described in this manual must be read and clearly understood.

DANGER

Only qualified and specially trained personnel should be allowed to work on this pump.

DANGER

Proper capacity hoist and lifting devices should be used while working on pump.

FLUID END SERVICE

This discussion starts with the description of steps necessary for removal and installation of the fluid cylinder assembly and proceeds to the removal and replacement of expendable parts such as valves, valve seats, and packing.

Fluid End Removal and Installation

1. Disconnect suction manifold from unit piping and discharge lines at the discharge flanges on the fluid end, plunger lubrication lines, and also any accessories such as stroke counters, pressure gages, etc. from the fluid end

2. Open any cover or covers on the top of the cradle and disconnect the plungers from the extension rods by removing plunger clamps.

3. Move the plungers inside the fluid cylinder as far as possible, taking care not to damage the plunger or pony rod.

4. Connect hoist to the fluid end and tighten the slings until they are snug only. Make sure that hoisting slings are not too tight, because that may put a strain on the stay rods and damage the threads when the cylinder is removed.

5. Remove all twenty (20) heavy hex nuts from the fluid end mounting flange using a hydraulic tensioning tool or hammer wrench. (A hydraulic or manual torque wrench is recommended for proper re-installation.)

6. Pull the fluid end assembly horizontally, straight away from the power end until it is completely free from the tie rods.

7. Move the fluid end to the service area for changing valves or other service.

NOTICE

While the stay rods are available to inspect, check loose stay rods and cracked threads in all stay rods. The connection between the power end and the fluid end is a critical one.

To reinstall the fluid end proceed as follows:

1. Check all twenty stay rods for thread damage or cracks. If replacement is required, refer to “TORQUES” on page 36. This connection is critical.

2. Thoroughly clean the ends of the stay rods. Grease or never-seize the threads.

3. Position the fluid end on the stay rods and slide the fluid end onto the stay rods until it bottoms out on the stay rod shoulders.

4. Install the two outer-most heavy hex nuts and hand tighten. Now it is safe to remove the lift and sling. Screw all heavy hex nuts in hand tight.

5. Using a hydraulic tensioning tool or torque wrench, torque all hex nuts to the Torque Requirements shown on page 36, using the sequence illustrated in FIGURE 4-1. These nuts MUST be kept tight. Under torqued nuts will lead to thread fatigue failure of the stay rods.

6. Reinstall the plunger clamps, piping connections and auxiliary equipment.

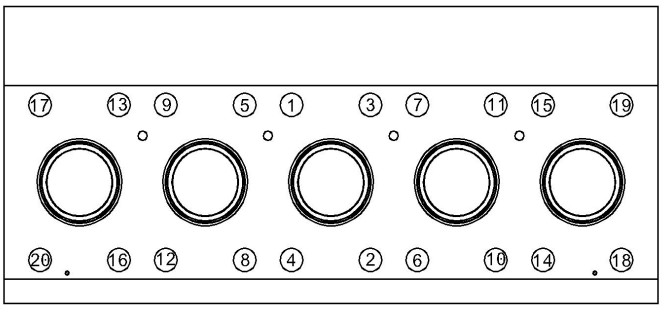

FIGURE 4-1 GD-2500Q Fluid End Tightening Sequence

Plunger and Packing Replacement

This service procedure can be performed with the fluid cylinder in place on the pump, and consists of the following steps:

1. Remove the suction cover retainer nut with the appropriate male hex wrench.

2. Remove the suction cover with a threaded "slide hammer type" puller. If necessary, also remove the suction valve spring retainer.

3. Remove any covers over the top of the plungers to get access to the plunger clamp / extension rod area.

4. Remove both cap screws holding the plunger clamp, then remove the clamp.

5. Loosen the packing nut to free the plunger from packing pre-load.

6. Remove the plunger through the suction cover opening.

7. Remove the packing nut, lantern gland, packing, header ring and spacer.

8. Inspect the plunger, lantern gland, packing, header ring and spacer for excessive wear, nicks, burrs, or any other defects. Replace expendable parts as necessary.

9. Clean and oil the packing bore in the stuffing box.

10. Install the spacer, header ring, packing rings (2) and the lantern gland in the stuffing box with the packing lips toward the front of the fluid end. See FIGURE 4-2.

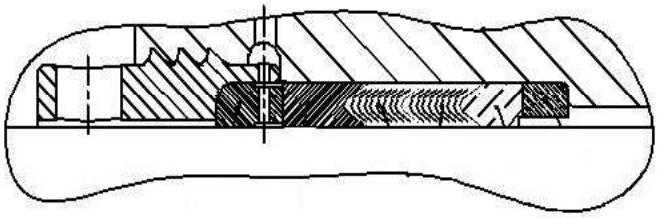

FIGURE 4-2 Typical Packing Assembly

11. Install and hand tighten the packing nut to align the packing in the bore.

12. Loosen the packing nut to allow for installation of the plunger.

13. Insert the plunger through the suction cover hole into the packing. It may be necessary to bump the plunger through the packing with a slide hammer.

14. Tighten the packing nut.

15. Inspect the clamp surfaces, plungers, and extension rods for cleanliness.

16. Install the clamp and tighten screws to the torque specified on page 36.

17. Tighten the packing nut again.

18. Replace the seals on the suction cover.

19. Install the suction valve spring retainer (if necessary), suction cover and tighten the suction cover retainer nut.

20. Make sure that the plunger lube line is in place before restarting the pump.

Plunger Size Change

The Fluid Cylinder must be replaced if it is determined that the plunger size must be changed to meet job requirements. Each plunger size requires a different fluid end.

1. Follow steps 1 through 7 of the " Fluid End Removal and Installation" section on page 21.

2. Install the new fluid end size by following steps 1 through 6 on page 22.

Valve and Seat Replacement

This procedure may be performed with the fluid end on the pump.

WARNING

Never try to remove or cut a valve seat with a torch. Severe damage to the fluid end may occur.

Before starting, make sure that special tools required for this procedure are available. For part numbers of the tools see the Parts Manual.

1. Remove the discharge cover retainer nut with the hex wrench provided with the pump.

2. Remove the discharge cover with a threaded "slide hammer" type puller.

3. Remove the suction cover retainer nut with the hex wrench provided with the pump.

4. Remove the suction cover with a "slide hammer type" puller.

5. Remove the suction valve spring retainer. Once the valve stop/spring retainer is visible, downward pressure and a "twisting" or "tilting" action will disengage the stop. (For "longhorn" style spring retainers, remove the discharge cover, valve and spring, and pass a long bar through the discharge valve-seat and put downward pressure on the suction valve stop. For "gun sight" spring retainers, utilize the spring retainer installation tool provided in the fluid end tool kit). The suction valve spring and valve can now be removed by hand.

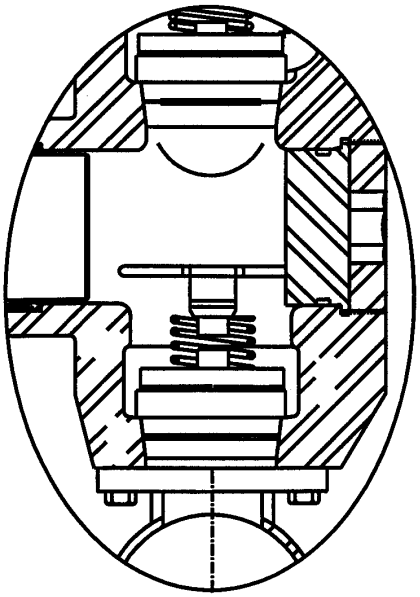

FIGURE 4-3: Fluid End Valve Stop

6. Remove the suction valve seat or discharge valve seat with a seat puller and a seat puller jack. These tools are available from Gardner Denver.

7. Clean the valve seat deck thoroughly.

8. Be sure the o-ring is installed on the seat and snap the valve seat into the taper by hand to fit tightly.

9. Place the winged valve on the top of the valve seat.

10. Bump the seat into the taper 2-3 times with a heavy bar to make the fit tight.

11. Reinstall the valve spring and suction valve spring retainer. (See step 5 above.)

12. Install new seals on the cover and reinstall the suction valve cover and retainer nut.

13. Install new seals on the discharge cover and reinstall the discharge valve, spring, cover and retainer nut.

14. Run the pump near maximum discharge pressure to secure the valve seats into the fluid end tapered bores.

POWER END SERVICE

DANGER

Before attempting to service the power end of the pump, the following safety precautions must be observed:

1. **Shift the pump transmission into the neutral gear.**
2. **Shut off the pump engine and remove the key from the ignition to prevent starting the engine inadvertently.**

The power end service procedures deal first with major assemblies, namely crosshead, connecting rod, crankshaft, and gear and pinion sets and then describe how to access all individual parts.

Oil Stop Head Seal Retainer and Gear Covers (FIGURE 2-2 and FIGURE 2-3)

1. Remove any plunger chamber covers or guards.

2. Remove the plunger clamps and slide the plungers forward.

3. Remove the oil stop head retainer cap screws and remove the head

4. Disconnect the input drive-line and remove the input drive flange from the pinion shaft.

5. Remove the rotary union seals and oil hoses from gear covers.

6. Remove input seal housing from drive side cover.

7. Remove the cap screws in gear covers. Covers can now be removed.

Crosshead Assembly (FIGURE 4-4)

1. Remove the fluid end following the procedure described in "Fluid End Removal and Installation," page 21.

2. Remove the oil stop head seal retainer and off-drive gear cover following the procedure described in "Oil Stop Head Seal Retainer and Gear Covers", page 24.

3. Remove the main rear inspection cover from power frame. (Inspect the gaskets)

4. Remove the extension rods from the front.

5. Using the correct puller, remove two keeper pins from front of each crosshead.

6. Using a threaded puller, pull outside crosshead wrist pin from off-drive side.

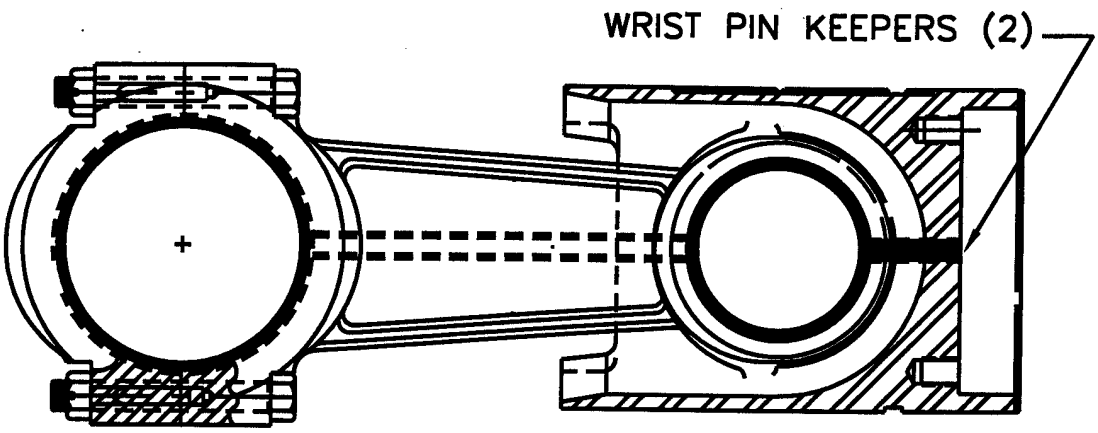

FIGURE 4-4 Crosshead Assembly

7. The crosshead is now free to slide out the front or nose of the pump.

8. The connecting rod must be removed from the rear of the pump.

9. Remove the cotter pins from the connecting rod bolts, and unscrew the four slotted nuts holding the rod-cap in place.

10. Remove the rod cap. CAUTION: The rod cap is held in place by two dowel pins. DO NOT DAMAGE PINS.

11. After removal of the rod cap, the rod will slip down and under the crankshaft throw, if the throw is in the UP position.

12. Rotate the crankshaft until the next wrist pin is visible through the wrist-pin hole in the side of the power frame.

13. Making sure the two keeper pins have been pulled from the front of the crosshead, repeat steps 6 through 12 to pull the next crosshead pin, crosshead, and connecting rod.

14. To remove the connecting rod bearing from the rod and cap, use a wooden mallet or wooden hammer handle and gently press or tap on the edge of the bearing half, attempting to "roll" it out of the cap or rod.

15. Note that the bearing half that fits the connecting rod is different than the bearing half that fits the cap half.

16. The wrist-pin bearing is a press-fit and must be replaced with the aid of a press.

Crosshead Guide and Stay Rods

1. The crosshead guides or “slide” should be replaced if excessively worn or damaged. (See CLEARANCES pg. 35)

2. If the crosshead guides must be replaced, it is recommended that it be done either by Gardner Denver or a qualified machine shop.

3. The stay rods are threaded into the power frame. They can be easily replaced by unscrewing and re-torquing new rods. (See Torque on pg. 36)

4. Typically, when failures of stay rods do occur, it is one of the outermost four.

5. Check all stay rods for proper torque, plus check for broken or cracked threads.

6. The stay rods need to be torqued to the values shown on page 36 when they are installed in the power end, as well as when the nuts are torqued after installing the fluid end.

Gear Reduction Components

NOTICE

This assembly is a timed gear set, and should be changed as a gear set. If one gear is changed, both should be changed. If one gear only is changed, the gears must be timed. This can be done with offset keys.

1. Remove the gear covers as described in “Oil Stop Head Seal Retainer and Gear Covers,” page 24.

2. Cut the safety wire (if used) and remove the four screws.

3. Remove the set screws on the square keys and pull with puller.

4. Connect a sling and overhead to one gear. Pull gear off and lay on side for safekeeping. Remove second gear.

5. Remove capscrews retaining pinion bearing housings. Using jackscrew holes, remove one housing.

6. With one pinion bearing housing removed, pull the corresponding pinion bearing from the pinion, as the bearing will not pass through the frame. Local heat may (approx. 200°F) may be required to remove the bearing from the pinion.

7. Pinion and other housing may now be removed with the aid of a lift.

Crankshaft Assembly

1. Remove the pump from the trailer and move it to service area. (The pump service area must have overhead-lift capability.) Power end must be level.

2. Remove the fluid end as described in "Fluid End Removal and Installation," page 21.

3. Remove the oil stop head seal retainer and gear covers as described in “Oil Stop Head Seal Retainer and Gear Covers,” page 24.

4. Remove the crosshead assemblies as described in “Crosshead Assembly,” page 25.

5. Remove the connecting rods as described “Crosshead Assembly.”

6. Remove the bull gears as described in “Gear Reduction Components,” on this page.

7. For best results, a “special” crankshaft handling tool should be fabricated to fit one of the crankshaft bosses where the keyway is cut. This “L” shaped lifting tool should come up and over the top of the pump, out to the centerline for easy, balanced lifting of the crankshaft. This tool must be capable of lifting the crankshaft in a horizontal position.

8. From one end of the crankshaft, remove the main bearing snap ring from the outer groove cut in the frame.

9. Using a bearing puller, remove the outer main bearing race from the frame. Local heat may be required to

loosen the bearing race from the frame bore. DO NOT OVERHEAT AND DAMAGE THE BEARING!! In the event the outer race can not be pulled from the frame, remove the main bearing snap ring from the inner groove cut in the crankshaft. Using a hydraulic jack and applying local heat, push the entire bearing off the crankshaft from inside the frame. Use extreme caution not to damage the bearing during removal.

10. The crankshaft is now free to move.

11. Install the lifting tool on the end of the crankshaft with the bearing removed. Gently lift the crankshaft to remove pressure from the bearings. Slowly thread the crankshaft horizontally through the outer bearing races. For alternative disassembly, turn the frame on its side with the removed bearing crankshaft throw facing up. Using a lifting eye and overhead hoist, lift the crankshaft from the frame, threading the bearings through the outer races.

12. Carefully place the crankshaft on a clean piece of cardboard, clean plywood, or clean rug. Cover the crankshaft and bearings with plastic to prevent contamination of the bearings.

13. Remove the snap ring bearing retainers from the frame, if the bearings are to be replaced.

14. Remove the outer bearing races from the frame using a bearing puller or hydraulic jack.

15. If the crankshaft main bearings are to be replaced, all bearing retainers must be removed from the crankshaft. The crankshaft should be held in a vertical position, and the bearings rapidly heated and allowed to drop off to the floor.

Crankshaft Replacement

1. Determine which is no. 1 throw (90° from keyway.) Place crankshaft in a vertical position, either in special fixture or a bull-gear lying flat on the ground, with the no. 1 throw down toward or nearest the ground.

2. Heat the bearings uniformly, and install the third bearing from the top first, then the second bearing from the top, and finally the outside bearing. (Use one side only of bearing retainers as bottom stops.)

3. Reverse position of crank, and repeat for the remaining three bearings.

4. Install bearing retainers on both sides of bearings.

5. Reversing step 11 from the previous section, install the crankshaft, threading the bearings through the outer races.

6. Install the outer shouldered races of the two outer main bearings (one on either end).

7. Reverse steps 8 through 1 to re-assemble.

NOTICE

When replacing main bearings, the two shouldered outer main bearing races must NOT be installed in the frame until the crankshaft has been installed and all inner main bearing races have passed through the non-shouldered outer main bearing races.

WARNING

Do not drive against rollers or bearing cage. Drive only against the bearing race, as severe damage to the bearings could occur.

WARNING

When reassembling the crankshaft assembly, make sure to follow these steps:

1. **Pack the outer bearing races in dry ice before assembling in the frame.**
2. **Heat the inner bearing races before installing on crankshaft. (250°F max. oven or oil bath).**
3. **Braze the retaining rings in the frame after installing the outer main bearing races. Also braze the retaining rings securing the inner and outer bearing races of the outer two main bearings on either end of the crankshaft. Avoid direct contact with the races or the crankshaft.**
4. **Reinstall the safety wire and/or loctite the bolts holding the bull-gears to the crankshaft.**

Failure to follow these directions may result in serious damage to the pump.

SECTION 5
TROUBLE-SHOOTING

PROBLEM	POSSIBLE CAUSE	SUGGESTED ACTION
Pump Overloads Driver.	1. Excessive pump speed and/or discharge pressure.	1. Reduce pump speed and/or pressure.
	2. Blockage or closed valve in discharge line.	2. Clean or open valve.
	3. Incorrect plunger size.	3. Install the correct plunger.
	4. Improper bypass conditions.	4. See recommended system layout, and correct error.
Fluid Not Delivered.	1. Pump not primed.	1. Prime pump.
	2. Air or vapor pocket in suction line.	2. Remove air from line.
	3. Clogged suction line.	3. Clean out line.
	4. Suction and/or discharge valves propped open.	4. Remove the obstruction.
Low Discharge Pressure.	1. Worn or fluid cut valve.	1. Replace valve assembly.
	2. Valve propped open.	2. Remove the obstruction.
	3. Pump cavitating.	3. See Cavitation, Fluid Knock or Hammer problem.
	4. Fluid leakage.	4. Replace plungers/packing and/or fluid end seals.
	5. Erroneous gauge reading.	5. Recalibrate or replace gauge(s).
Low Suction Pressure.	1. Low head (NPSH).	1. Raise fluid supply level. Install charging pump.
	2. Insufficient charging pump capacity.	2. Increase charging pump speed or size.
	3. Retarded fluid flow.	3. Remove restrictions from suction line.
	4. Erroneous gauge reading.	4. Recalibrate or replace gauge(s).

PROBLEM	POSSIBLE CAUSE	SUGGESTED ACTION
Cavitation, Fluid Knock or Hammer.	1. Improper suction system layout.	1. See recommended system layout in manual.
	2. Low suction pressure.	2. See Low Suction Pressure problem.
	3. Suction stabilizer and pulsation damper not used.	3. Install suction stabilizer and pulsation damper.
	4. Defective stabilizer or damper.	4. Repair and recharge or replace.
	5. High fluid temperature or viscosity.	5. Reduce pump speed.
	6. High fluid vapor pressure.	6. Increase NPSH.
	7. High acceleration head.	7. Increase supply line size. Decrease supply line length.
	8. Suction valve spring too stiff. with low NPSH.	8. Use weaker spring.
	9. Air/Gas in pumped fluid.	9. Allow more settling time in supply tank. Reduce pump speed.
	10. Air entering suction line.	10. Repair suction line.
	11. Air entering charging pump.	11. Tighten or replace shaft packing or seal.
	12. Air entering or charge gas escaping from suction stabilizer.	12. Repair and recharge stabilizer
	13. Multiple pumps operating in phase.	13. Use a suction stabilizer on each pump. Separate lines may also be needed.
Suction or Discharge Line Vibration.	1. Line(s) not supported.	1. Install supports or hangers.
	2. Pump cavitating.	2. See Cavitation, Fluid Knock or Hammer problem.
High Crankcase Oil Temperature.	1. High ambient temperature.	1. Use an oil heat exchanger with a circulating pump.
	2. Improper type/grade oil used.	2. Use recommended oil.
	3. Pump overloaded.	3. Reduce pump speed and/or pressure.
	4. Improper clearance in main or rod bearings, crossheads or bushings.	4. Check and adjust clearance. Replace parts as required.

PROBLEM	POSSIBLE CAUSE	SUGGESTED ACTION
Knock In Power End.	1. Improper main bearing clearance.	1. Check and adjust clearances.
	2. Incorrect pump rotation.	2. Reverse rotation.
	3. Loose plunger coupling.	3. Check and tighten. Replace if damaged.
	4. Loose bearing housings/ covers.	4. Check and tighten. Replace if damaged.
	5. Worn crosshead pin.	5. Replace.
	6. Worn crosshead pin bushing.	6. Replace.
	7. Worn connecting rod to journal bearing.	7. Replace.
	8. Worn crankshaft.	8. Replace.
	9. Worn crosshead.	9. Replace.
	10. Worn main bearing.	10. Replace.
	11. Valve noise transmitted to power end.	11. See Excessive Valve Noise problem.
	12. Cavitation noise transmitted to or causing shock loading in power end.	12. See Cavitation, Fluid Knock or Hammer problem.
Excessive Valve Noise.	1. Pump cavitation.	1. See Cavitation, Fluid Knock or Hammer problem.
	2. Seal on inserted valve damaged or missing.	2. Replaced seal or valve.
	3. Broken/weak valve spring(s)	3. Replace spring(s).
Oil Leakage From Stop Head.	1. Worn, damaged or corroded. extension rod.	1. Replace extension rod.
	2. Worn oil stop head seal.	2. Replace seal.
	3. Oil level too high.	3. Reduce oil level.
	4. Excessive crosshead wear.	4. Replace crosshead.
	5. Pressure in crankcase.	5. Clean or replace air breather.
	6. Misalignment in front.	6. Loosen bolts and center. crosshead guide cover.

PROBLEM	POSSIBLE CAUSE	SUGGESTED ACTION
Oil Seal Leakage.	1. Worn sealing lip.	1. Replace seal.
	2. Damaged sealing lip.	2. Replace seal.
	3. Outside diameter not seated.	3. Clean and polish bore of oil seal housing.
	4. Shaft rough at seal lip.	4. Clean and polish shaft or replace.
	5. Pressure in crankcase.	5. Clean or replace air breather.
Stuffing Box Leakage.	1. Short plunger/packing life.	1. See Short plunger/Packing Life problem.
	2. Worn packing rings/metal.	2. Replace packing rings/metal.
	3. Seal leaking at fluid end.	3. Check seal, stuffing box groove and sealing surface.
	4. Corrosion due to wrong stuffing box material for pumped fluid.	4. Determine and install correct stuffing box.
	5. Stuffing box bore worn.	5. Replace stuffing box.
Pumped Fluid In Crankcase.	1. Worn, damaged or corroded extension rod.	1. Replace extension rod.
	2. Worn oil stop head seal.	2. Replace seal.
	3. Stuffing box leakage.	3. See Stuffing Box Leakage problem.
Short Valve Life.	1. Abrasives in pumped fluid.	1. Filter pumped product. Use severe duty valves with insert.
	2. Valve not sealing.	2. Broken valve spring - replace. Worn valve guide - replace. Worn valve/seat - replace.
	3. Pump cavitating.	3. See Cavitation, Fluid Knock or Hammer problem.
	4. Corrosion.	4. Treat pumped fluid. Use different materials for valves/seats. Install sacrificial anodes in suction manifold.

PROBLEM	POSSIBLE CAUSE	SUGGESTED ACTION
Short Plunger/Packing Life.	1. Abrasives in pumped fluid.	1. Consult Gardner Denver Customer Service for plunger/ packing recommendation. Filter pumped fluid.
	2. Excessive plunger/packing friction.	2. Lubricate with rock drill oil. Do not overtighten adjustable packing. Use Gardner Denver plungers.
	3. Metal parts or particles wearing plunger.	3. Check stuffing box alignment. Check gland alignment. Check plunger alignment. Check packing for foreign particles. Replace lantern ring.
	4. Wrong plunger/packing for pumping conditions.	4. Consult Gardner Denver Customer Service.
	5. Wrong size packing.	5. Install correct size packing.
	6. Improper packing installation.	6. Check installation procedure and install correctly.
	7. Excessive crosshead wear.	7. Replace crosshead.
	8. Pump cavitating.	8. See Cavitation, Fluid Knock or Hammer problem.
Catastrophic Failures: Broken Shafts, Bent Rods, etc.	1. Pump overloaded.	1. Reduce pump speed and/or pressure.
	2. Start-up against closed discharge valve.	2. Insure valve is open before starting.
	3. Main bearing failure.	3. Repair or replace.
	4. Plunger striking valve or valve parts.	4. Check valve condition and installation procedure.
	5. Plunger striking cylinder.	5. Check plunger for proper length.
	6. Frozen fluid in cylinder.	6. Do not start pump when pumped fluid is below freezing temperature.
	7. Lube oil pump failure.	7. Replace oil pump.

PROBLEM	POSSIBLE CAUSE	SUGGESTED ACTION
Catastrophic Failures: Broken Shafts, Bent Rods, etc. (continued).	8. Low oil level in sump.	8. Check oil level frequently, and add oil as required.
	9. Contaminated oil in sump.	9. Check oil condition frequently.
	10. Cavitation shock loading.	10. See Cavitation, Fluid Knock or Hammer problem.
Stud Failures.	1. Catastrophic failures.	1. See Catastrophic Failures problem.
	2. Improper nut torque.	2. Check torque specifications and torque to correct values.
	3. Stud bending due to uneven nut seating.	3. Check nut seat surface for flatness. Rework or replace as required.
	4. Corrosive attack by pumped fluid.	4. Treat fluid or use corrosion resistant studs.
	5. Studs damaged before installation.	5. Check condition before installation, and replace if necessary.
	6. Low strength studs.	6. Use Gardner Denver studs.

SECTION 6
REBUILDING DATA, RECOMMENDED RUNNING CLEARANCES AND TORQUES

REBUILDING DATA FOR GD-2500Q PUMP (in.)

PUMP STROKE	8 Inches
Crankshaft Throw Diameter	7.4995” / 7.4985”
Crankshaft Shaft Diameter at Main Bearing	16.002” / 16.001”
Distance Between Main Bearing Centers	10.00
Bore in Frame for (4) Inner Main Bearings	19.748” / 19.750”
Bore in Frame for (2) Outer Main Bearings	19.798” / 19.800”
Bore in Frame for Pinion Bearing Housing	12.406” / 12.408”
Connecting Rod Centers	10.00
Connecting Rod Bearing Bore (Assembled in Journal Bearing Housing)	7.507” / 7.510”
Crosshead Guide Bore	9.000” / 9.004”
Crosshead	8.981” / 8.979”
Wrist Pin	5.000” / 5.001”
Wrist Pin Bushing Bore	5.009” / 5.010”

RECOMMENDED RUNNING CLEARANCES – ACTUAL

	New (in.)	Maximum Allowable Wear Limit (in.)
Connecting Rod Bearing to Crankshaft	.009”/.013”	.018”
Main Bearing Installed Clearance*	.002”/.008”	.019”
Main Bearing Bench Clearance*	.011”/.013”	.N/A
Crosshead to Guide*	.018”/.026”	.045”
Crankshaft Endplay	.005”/.015”	.030”
Wrist-Pin-to Bearing Clearance	.007”/.010”	.023”
Pinion Float Prior to Gear Installation	.1/4” to 3/8”	

* Feeler gauge clearances .001 inch less than actual values.

GD-2500Q QUINTUPLEX
TORQUES

DESCRIPTION	FASTENER	FOOT POUNDS WITH LOCTITE	FOOT POUNDS WITH ANTISEIZE
Plunger Clamp Bolts	1/2”-13		58
Pinion Bearing Housing	3/4”-10	160	
Conn. Rod Fasteners	3/4”-10		280
Intermediate Rod to Crosshead	3/4”-10	160	
Fluid End to Suction Manifold	7/8”- 9	260	
Discharge Flange to Fluid Cylinder Nuts	1”- 8	475	
Bull-Gear Retaining Scews (Gr. 8)	1-1/4”-7	1050	
Stay Rods into Power End	1-3/4”-8		1000
Fluid Cylinder Nuts to Stay Rods	1-3/4”-8		2000
Pony Rod to Crosshead	3/4”-10	280	
Pump Frame to Base / Skid Bolts	1”- 8	475	

Product Warranty

BE-13 R 02/2003, Copyright © 2003 Gardner Denver, Inc.

GENERAL PROVISIONS AND LIMITATIONS

Gardner Denver (the "Company") warrants to each original retail purchaser ("Purchaser") of its new products, assemblies or parts from the Company or its authorized distributors that such products are, at the time of delivery to the Purchaser, made with good material and workmanship. No warranty is made with respect to:

1. Any product which has been repaired or altered in such a way, in the Company's judgment, as to affect the product adversely.
2. Any product which has, in the Company's judgment, been subject to negligence, accident, or improper storage, improper installation, operation or application. (Examples: over-pressure, sand-outs, cavitation, corrosion, erosion or degradation).
3. Any product which has not been operated or maintained in accordance with the recommendations of the Company.
4. Components or accessories manufactured, warranted and serviced by others.
5. Any reconditioned or prior owned product.

Claims for items described in (4) above should be submitted directly to the manufacturer.

WARRANTY PERIOD

The Company's obligation under this warranty is limited to repairing or, at its option, replacing, during normal business hours at an authorized service facility of the Company, any part or assembly which in the Company's judgment proved to have unsatisfactory material or workmanship within the applicable Warranty Period as follows.

Except for the products or components listed below, and subject to the limitations and restrictions set forth in the "Disclaimer" section set forth below, the Warranty Period for all products is 1,250 hours of operation or three (3) months after start-up, not to exceed 120 days after delivery to Purchaser, whichever occurs first. The exceptions are as follows:

1. Power end is warranted for twelve (12) months from date of start-up or eighteen (18) months from date of delivery to the Purchaser, whichever occurs first.
2. Forged steel fluid cylinders are warranted for materials and workmanship for 6 months from the date of installation or 18 months from the date of delivery to the purchaser, which ever occurs first.
3. Repairs are warranted for 90 days from the date of delivery, for the workmanship and materials of the new parts installed.
4. Weld repaired fluid ends and weld repaired components are not warranted.
5. Expendable fluid end parts, including, but not limited to, valves, valve parts, packing, liners and pistons, are not covered by this warranty due to variable abrasive nature of material pumped.

PRESERVATION ASSEMBLIES DESTINED FOR STORAGE

In order for warranty acceptance any pump assembly not immediately installed or destined to be in storage or in transit for extended periods of time must be prepared for storage as defined in the Company's Long Term Storage Procedure. This includes but is not limited to:

- Drain and thoroughly clean inside power end crankcase.
- Spray rust inhibiting oil on all bearing, machined and inside surfaces of the power end.
- Induce clean gear oil into any circulating pump, filter, heat exchanger and piping.
- Remove valves, seats and plungers from the fluid end. Thoroughly clean and dry these parts and all internal surfaces. Coat all cylinder bores, valve covers and reusable expendable parts with rust preventative.
- Flush all water, and contaminants from pump, tanks, hoses and spray nozzles. Spray all components with a rust inhibiting oil.
- Rotate pump every 30 days to insure bearings are oiled.

- At the expense of the Purchaser, any product properly preserved must be inspected by an authorized agent of the Company, prior to the Company, granting any extended warranty beyond that stated in this warranty.

LABOR TRANSPORTATION AND INSPECTION

The Company will provide labor, by Company representative or authorized service personnel, for repair or replacement of any product or part thereof which in the Company's judgment is proved not to be as warranted. Labor shall be limited to the amount specified in the Company's labor rate schedule. Labor costs in excess of the Company rate schedules caused by, but not limited to, location or inaccessibility of the equipment, or labor provided by unauthorized service personnel is not provided for by this warranty.

All costs of transportation of product or parts claimed not to be as warranted and, of repaired or replacement parts to or from such service facility shall be borne by the Purchaser. The Company may require the return of any part claimed not to be as warranted to one of its facilities as designated by the Company, transportation prepaid by the Purchaser, to establish a claim under this warranty.

Replacement parts provided under the terms of this warranty are warranted for the remainder of the Warranty Period of the product upon which installed to the same extent as if such parts were original components.

The Company may request a root cause analysis be performed in-order to identify if a request for warranty claim meets the requirements of this warranty.

DISCLAIMER

Except as to title, the foregoing warranty is the sole and exclusive warranty of the Company. The Company hereby extends other manufactures' warranty or guaranties, if any given to Company by such manufacturer, but only to the extent the Company is able to enforce such warranty or guaranties. The Company has not authorized any party to make any representation or warranty other than as expressly set forthherein. SELLER HEREBY DISCLAIMS AND EXCLUDES ANY OTHER EXPRESS, IMPLIED OR STATUTORY WARRANTIES, ARISING BY OPERATION OF LAW OR OTHERWISE, INCLUDING, WITHOUT LIMITATION, ANY WARRANTIES OF MERCHANTABILITY OR FITNESS FOR A PARTICULAR PURPOSE. COMPANY MAKES NO WARRANTIES OR REPRESENTATIONS OF ANY KIND WHATSOEVER (EXPRESS, IMPLIED OR STATUTORY), OF LAW OR OTHERWISE, ON ANY EQUIPMENT, COMPONENT PARTS OR ACCESSORIES SOLD HEREUNDER WHICH, ARE NOT MANUFACTURED BY COMPANY.

NOTWITHSTANDING ANYTHING HEREIN TO THE CONTRARY, THE FOREGOING WARRANTY SHALL BE THE SOLE AND EXCLUSIVE REMEDY AVAILABLE TO THE PURCHASER. UNDER NO CIRCUMSTANCES, WHETHER IN CONTRACT, TORT OR OTHERWISE, SHALL THE COMPANY'S TOTAL LIABILITY ARISING IN CONNECTION WITH ANY PURCHASE ORDER EXCEED THE AMOUNT OF ANY SALES OR OTHER PROCEEDS RECEIVED PURSUANT THERETO. IN ADDITION, UNDER NO CIRCUMSTANCES, WHETHER IN CONTRACT, TORT OR OTHERWISE, SHALL THE COMPANY BE LIABLE FOR LIQUIDATED, SPECIAL, INDIRECT, INCIDENTAL, EXEMPLARY, OR CONSEQUENTIAL DAMAGES, EXPENSES OR COSTS, INCLUDING, WITHOUT LIMITATION, LOST PROFITS OR FACILITY DOWNTIME, HOWEVER CAUSED AND EVEN IF THE POTENTIAL OF SUCH DAMAGES WAS DISCLOSED AND/OR KNOWN.

No statement, representation, agreement, or understanding, oral or written, made by any agent, distributor, representative, or employee of the Company which is not contained in this Warranty will be binding upon the Company unless made in writing and executed by an officer of the Company.

This warranty shall not be effective as to any claim which is not presented within 30 days after the date upon which the product is claimed not to have been as warranted. Any action for breach

of this warranty must be commenced within one year after the date upon which the cause of action occurred.

Any adjustment made pursuant to this warranty shall not be construed as an admission by the Company that any product was not as warranted.

WARRANTY REQUESTS

Products to be returned for warranty analysis shall be approved for return in writing by the Company prior to shipment. All requests for product return shall be submitted by email. Facsimile or letter to:

Warranty Department c/o
Gardner Denver Petroleum Pumps
4747 South 83rd East Avenue
Tulsa, Oklahoma 74145

Email: CCR.QAR@gardnerdenver.com
Facsimile: (918) 664-6225

BE-13 R 02/2003, Copyright © 2003 Gardner Denver, Inc.

For additional information contact your local representative or

Gardner Denver Inc.
4747 South 83rd East Avenue, Tulsa, OK 74145
PH: (918) 664-1151, (800) 637-8099
FAX: (918) 664-6225
www.gardnerdenver.com

Specifications subject to change without notice.
Copyright © 2001 Gardner Denver, Inc. Litho in U.S.A.