DAMIR JELASKA

GEARS
AND GEAR DRIVES

WILEY

GEARS AND GEAR DRIVES

GEARS AND GEAR DRIVES

Damir Jelaska
University of Split, Croatia

WILEY
A John Wiley & Sons, Ltd., Publication

This edition first published 2012
© 2012 John Wiley & Sons Ltd

Registered office
John Wiley & Sons Ltd, The Atrium, Southern Gate, Chichester, West Sussex, PO19 8SQ, United Kingdom

For details of our global editorial offices, for customer services and for information about how to apply for permission to reuse the copyright material in this book please see our website at www.wiley.com.

The right of the author to be identified as the author of this work has been asserted in accordance with the Copyright, Designs and Patents Act 1988.

All rights reserved. No part of this publication may be reproduced, stored in a retrieval system, or transmitted, in any form or by any means, electronic, mechanical, photocopying, recording or otherwise, except as permitted by the UK Copyright, Designs and Patents Act 1988, without the prior permission of the publisher.

Wiley also publishes its books in a variety of electronic formats. Some content that appears in print may not be available in electronic books.

Designations used by companies to distinguish their products are often claimed as trademarks. All brand names and product names used in this book are trade names, service marks, trademarks or registered trademarks of their respective owners. The publisher is not associated with any product or vendor mentioned in this book. This publication is designed to provide accurate and authoritative information in regard to the subject matter covered. It is sold on the understanding that the publisher is not engaged in rendering professional services. If professional advice or other expert assistance is required, the services of a competent professional should be sought.

Library of Congress Cataloging-in-Publication Data

Jelaska, Damir.
Gears and gear drives / Damir Jelaska.
p. cm.
Includes bibliographical references and index.
ISBN 978-1-119-94130-9 (cloth)
1. Gearing. I. Title.
TJ184.J415 2012
621.8′33–dc23
2012014164

A catalogue record for this book is available from the British Library.

Print ISBN: 9781119941309

Set in 10/12 pt Times by Thomson Digital, Noida, India

In memory of my mother

Contents

Preface xv

Acknowledgments xvii

1 Introduction 1
1.1 Power Transmissions and Mechanical Drives 1
1.2 Classification of Mechanical Drives 3
1.3 Choosing a Mechanical Drive 7
1.4 Multi-Step Drives 9
1.5 Features and Classification of Gear Drives 12
1.5.1 Features of Gear Drives 12
1.5.2 Classification of Gear Drives 12
1.6 List of Symbols 16
1.6.1 Subscripts to Symbols 16

2 Geometry of Cylindrical Gears 17
2.1 Fundamentals of the Theory of Toothing 17
2.1.1 Centrodes, Roulettes and Axodes 17
2.1.2 Envelopes, Evolutes and Involutes 18
2.1.3 Cycloid and Involute of a Circle 18
2.1.3.1 Cycloid 18
2.1.3.2 Involute of Circle 20
2.1.4 Main Rule of Toothing 21
2.1.4.1 Analytical Determining of Mated Profiles 25
2.1.4.2 Radii of Curvature of Mated Profiles 27
2.2 Geometry of Pairs of Spur Gears 29
2.2.1 Cycloid Toothing 29
2.2.2 Involute Toothing 30
2.3 Involute Teeth and Involute Gears 33
2.4 Basic Tooth Rack 35
2.5 Fundamentals of Cylindrical Gears Manufacture 38
2.5.1 Generating Methods 38
2.5.2 Forming Methods 43

2.5.3 *Gear Finishing* 45
2.5.4 *Basic Rack-Type and Pinion-Type Cutters* 48
2.6 Cutting Process and Geometry of Gears Cut with Rack-Type Cutter 49
2.6.1 *Profile Shift* 49
2.6.2 *Meshing of Rack Cutter with Work Piece, Basic Dimensions of Gear* 50
2.6.3 *Tooth Thickness at Arbitrary Circle* 51
2.6.4 *Tip Circle Diameter* 52
2.6.5 *Profile Boundary Point; Tooth Root Undercutting* 53
2.6.6 *Effect of Profile Shift on Tooth Geometry* 55
2.6.7 *Gear Control Measures* 56
2.6.7.1 *Chordal Tooth Thickness on the Arbitrary Circle* 56
2.6.7.2 *Constant Chord Tooth Thickness* 57
2.6.7.3 *Span Measurement* 58
2.6.7.4 *Dimension Over Balls* 60
2.7 Parameters of a Gear Pair 62
2.7.1 *Working Pressure Angle of a Gear Pair* 62
2.7.2 *Centre Distance* 63
2.7.3 *Gear Pairs With and Without Profile Shift* 64
2.7.3.1 *Gear Pairs Without Profile Shift* 64
2.7.3.2 *Gear Pairs with Profile Shift* 64
2.7.4 *Contact Ratio* 66
2.7.5 *Distinctive Points of Tooth Profile* 70
2.7.6 *Kinematic Parameters of Toothing* 71
2.8 Basic Parameters of Gears Generated by the Fellows Method 74
2.8.1 *Pinion-Type Cutter* 74
2.8.2 *Dimensions of Gears Cut by Pinion-Type Cutter* 75
2.8.3 *Undercutting the Tooth Root* 76
2.8.4 *Geometry of Internal Gear Toothing* 77
2.9 Interferences in Generating Processes and Involute Gear Meshing 78
2.9.1 *Interferences in Tooth Cutting* 78
2.9.1.1 *Tooth Root Undercutting* 78
2.9.1.2 *Overcutting the Tooth Addendum (First Order Interference)* 79
2.9.1.3 *Overcutting the Tooth Tip Corner (Second Order Interference)* 80
2.9.1.4 *Radial Interference (Third Order Interference)* 80
2.9.1.5 *Null Fillet* 82
2.9.2 *Interferences in Meshing the Gear Pair Teeth* 83
2.9.2.1 *Gear Root Interference* 83
2.9.2.2 *Interferences of Tooth Addendum* 84
2.9.2.3 *Radial Interference* 84
2.10 Choosing Profile Shift Coefficients 84
2.10.1 *Choosing Profile Shift Coefficients by Means of Block-Contour Diagrams* 85
2.10.2 *Choosing Profile Shift Coefficients by Means of Lines of Gear Pairs* 88
2.11 Helical Gears 91
2.11.1 *Basic Considerations* 91
2.11.2 *Helical Gear Dimensions and Parameters of a Gear Pair* 97

2.11.3 *Control Measures* 100
2.11.4 *Helical Gear Overlaps* 102
2.11.4.1 *Length of Contact Lines* 104
2.12 Tooth Flank Modifications 106
2.12.1 *Transverse Profile Modifications* 107
2.12.1.1 *Pre-Finish Flank Undercut* 107
2.12.1.2 *Tip Corner Chamfering and Tip Corner Rounding* 107
2.12.1.3 *Tooth Tip Relief* 108
2.12.1.4 *Tooth Root Relief* 113
2.12.1.5 *Tooth Tip Relief of the Gear Generated by Pinion-Type Cutter* 114
2.12.1.6 *Profile Crowning* 117
2.12.2 *Flank Line Modifications* 117
2.12.2.1 *Flank Line end Reliefs* 117
2.12.2.2 *Flank Line Slope Modification* 117
2.12.2.3 *Flank Line Crowning* 118
2.12.3 *Flank Twist* 119
2.13 Geometry of Fillet Curve 119
2.13.1 *Fillet Curve Equation* 120
2.13.2 *Fillet Curve Radius of Curvature* 124
2.13.3 *Geometry of Undercut Teeth* 125
2.13.3.1 *Profile Boundary Point* 125
2.13.3.2 *Contact Ratio of Gears with Undercut Teeth* 126
2.14 Tolerances of Pairs of Cylindrical Gears 127
2.14.1 *Control and Tolerances of Gear Body* 128
2.14.2 *Control and Tolerances of Teeth* 128
2.14.2.1 *Tooth Profile Control* 130
2.14.2.2 *Helix Deviations* 134
2.14.2.3 *Pitch Deviations* 135
2.14.2.4 *Radial Runout of Teeth* 136
2.14.2.5 *Tangential Composite Deviation* 136
2.14.2.6 *Tooth Thickness Tolerances* 138
2.14.2.7 *CNC Gear Measuring Centre* 143
2.14.3 *Control of Gear Pair Measuring Values* 145
2.14.3.1 *Systems of Gear Fits, Centre Distance Tolerances, Backlash* 145
2.14.3.2 *Contact Pattern Control* 149
2.15 Gear Detail Drawing 151
2.16 List of Symbols 153
2.16.1 *Subscripts to symbols* 154
2.16.2 *Combined Symbols* 155

3 Integrity of Gears **157**
3.1 Gear Loadings 157
3.1.1 *Forces Acting on the Gear Tooth* 157
3.1.2 *Incremental Gear Loadings* 159

U.S. Well - Exhibit 2012
Liberty v. U.S. Well - IPR2025-00066
Page 6 of 52

3.2 Causes of Gear Damage 164
3.2.1 Gear Breakages 164
3.2.2 Active Tooth Flank Damage 166
3.3 Pitting Load Capacity 170
3.3.1 Contact Stresses 170
3.3.1.1 Nominal Value of Contact Stress 170
3.3.1.2 Real Value of Contact Stress 175
3.3.2 Allowable Contact Stresses 181
3.3.3 Dimensioning for Contact Stress 189
3.3.4 List of Symbols for Sections 3.1, 3.2 and 3.3 190
3.3.4.1 Subscripts to Symbols 191
3.3.4.2 Combined Symbols 192
3.4 Tooth Root Load Capacity 193
3.4.1 Tooth Root Stress 193
3.4.2 Tooth Root Permitted Stress 200
3.4.3 Dimensioning for Tooth Root Stress 207
3.5 Gear Load Capacity at Variable Loading 208
3.6 List of Symbols for Sections 3.4 and 3.5 210
3.6.1 Subscripts to Symbols 211
3.6.2 Combined Symbols 212
3.7 Scuffing Load Capacity 213
3.7.1 Safety Factor Against Scuffing for Flash Temperature Method 213
3.7.2 Force Distribution Factor X_G 217
3.7.3 Safety Factor Against Scuffing for Integral Temperature Method 225
3.8 Micro-Pitting Load Capacity 229
3.8.1 Elastohydrodynamic Lubricant Film Thickness 229
3.8.1.1 Calculation of Material Parameter G_M 230
3.8.1.2 Calculation of Speed Parameter U_Y 231
3.8.1.3 Load Parameter W_Y 232
3.8.1.4 Sliding Parameter S_{GF} 232
3.8.2 Safety Factor Against Micro-pitting 232
3.9 List of Symbols for Sections 3.6 and 3.7 236
3.9.1 Subscripts to Symbols 237
3.9.2 Combined Symbols 238

4 Elements of Cylindrical Gear Drive Design 241
4.1 Design Process 241
4.1.1 Design Procedure for a Gear Pair 241
4.1.2 Distribution of Gear Train Transmission Ratio 243
4.1.3 Gear Materials and Heat Treatment 244
4.1.3.1 Metallic Materials and their Heat Treatment 244
4.1.3.2 Sintered Materials 248
4.1.3.3 Polymer Materials 248
4.1.4 Gear Drive Design 249
4.1.4.1 Design of Housing 251
4.1.4.2 Vents 255

4.1.4.3 Lubricant Drain 255
4.1.4.4 Design of Bearing Locations 257
4.1.4.5 Design of Ribs 257
4.1.5 Design of Gears 258
4.2 Gear Drive Lubrication 262
4.2.1 Selection of Lubricant 262
4.2.2 Ways of Gear Lubrication 263
4.2.2.1 Bath Lubrication 263
4.2.2.2 Spray Lubrication 265
4.3 Power Losses and Temperature of Lubricant 266
4.3.1 Power Losses in Mesh 266
4.3.1.1 Power Losses in Mesh, Under Load, for a Single Gear Pair 266
4.3.1.2 Power Losses in Idle Motion 267
4.3.2 Power Losses in Bearings 268
4.3.2.1 Rolling Bearings 268
4.3.2.2 Sliding Bearings 269
4.3.3 Power Losses in Seals 270
4.3.4 Power Efficiency of Gear Drive 270
4.3.5 Temperature of Lubricant 271
4.4 List of Symbols 275
4.4.1 Subscripts to Symbols 276
4.4.2 Combined Symbols 276

5 Bevel Gears 279
5.1 Geometry and Manufacture of Bevel Gears 279
5.1.1 Theory of Bevel Gear Genesis 279
5.1.2 Types and Features of Bevel Gears 280
5.1.3 Application of Bevel Gears 283
5.1.4 Geometry of Bevel Gears 284
5.1.4.1 Fundamentals of Geometry and Manufacture 284
5.1.4.2 Virtual Toothing and Virtual Gears 287
5.1.4.3 Basic Parameters of Straight Bevels 289
5.1.4.4 Design of Bevel Teeth 291
5.1.4.5 Undercut, Profile Shift 291
5.1.4.6 Sliding of Bevels 292
5.1.4.7 Contact Ratio of Straight Bevels 293
5.1.5 Geometry of Helical and Spiral Bevels 293
5.1.6 Manufacturing Methods for Bevel Gears 294
5.1.6.1 Straight Bevels Working 294
5.1.6.2 Spiral and Helical Bevel Working 301
5.2 Load Capacity of Bevels 306
5.2.1 Forces in Mesh 306
5.2.2 Pitting Load Capacity 307
5.2.3 Tooth Root Load Capacity 310
5.2.4 Scuffing and Micro-Pitting Load Capacities 311

5.3 Elements of Bevel Design 311
5.4 Control and Tolerances of Bevel Gears 316
5.4.1 Pitch Control 316
5.4.2 Radial Runout Control of Toothing 318
5.4.3 Tangential Composite Deviation 319
5.4.4 Tooth Thickness Control 319
5.4.5 Bevel Gear Drawing 321
5.5 Crossed Gear Drives 321
5.5.1 Basic Geometry 323
5.5.2 Speed of Sliding 324
5.5.3 Loads and Load Capacity 325
5.5.3.1 Forces Acting on Crossed Gears 325
5.5.3.2 Efficiency Grade 325
5.5.3.3 Load Capacity of Crossed Gear Pair 326
5.6 List of Symbols 327
5.6.1 Subscripts to Symbols 328
5.6.2 Combined Symbols 328

6 Planetary Gear Trains 331
6.1 Introduction 331
6.1.1 Fundamentals of Planetary Gear Trains 331
6.1.2 Rotational Speeds and Transmission Ratio 334
6.1.3 Features of Planetary Gear Trains 341
6.1.4 Mating Conditions 342
6.1.4.1 Condition of Coaxiality 342
6.1.4.2 Condition of Neighbouring 342
6.1.4.3 Assembly Condition 343
6.1.5 Diagrams of Peripheral and Rotational Speeds 344
6.1.6 Wolf Symbolic 347
6.1.7 Forces, Torques and Power of Planetary Gear Trains 347
6.1.7.1 Peripheral Forces and Torques 347
6.1.7.2 Power and Efficiency 349
6.1.7.3 Branching of Power 352
6.1.7.4 Self-Locking 353
6.2 Special Layouts of Simple Planetary Gear Trains 356
6.2.1 Bevel Differential Trains 356
6.2.2 Planetary Gear Trains with Single Gear Pair 358
6.2.3 Harmonic Drive 359
6.2.4 Differential Planetary Gear Trains 361
6.2.5 Planetary Gear Train of a Wankel Engine 362
6.3 Composed Planetary Gear Trains 364
6.3.1 Compound Planetary Gear Trains 364
6.3.2 Parallel Composed Planetary Gear Trains 364
6.3.3 Coupled Planetary Gear Trains 364
6.3.4 Closed Planetary Gear Trains 366
6.3.5 Reduced Coupled Planetary Gear Trains 368

6.3.6 Reverse Reducers 373
6.3.7 Planetary Gear Boxes 374
6.4 Elements of Planetary Gear Train Design 377
6.4.1 Issues of Planetary Gear Train Design 377
6.4.2 Calculations for Central Gears and Planets 382
6.5 List of Symbols 384
6.5.1 Subscripts to Symbols 385
6.5.2 Combined Symbols 386

7 Worm Gear Drives 387
7.1 Concept, Features, Classification 387
7.2 Geometry and Working of Worm Gear Pair 389
7.2.1 Geometry and Working of Worm 389
7.2.1.1 Dimensions of Worm 390
7.2.1.2 Worm Sections 390
7.2.1.3 Worm Working and Shape of Flanks 392
7.2.2 Geometry and Working of Wormwheels 392
7.2.2.1 Wormwheel Geometry 394
7.2.2.2 Wormwheel Working 397
7.2.3 Calculation Values of Worm Gear Pair 399
7.2.3.1 Centre Distance of Worm Gear Pair 399
7.2.3.2 Transmission Ratio and Gear Ratio 399
7.2.3.3 Tip Clearance of Worm Gear Pair 399
7.2.3.4 Contact Ratio of Worm Gear Pair 399
7.2.3.5 Worm Gear Pair Speeds 400
7.3 Control Measures and Tolerances of Worm Gear Pair 400
7.3.1 Control of Worm Measuring Values 401
7.3.1.1 Pitch Control 401
7.3.1.2 Thread Profile Control 401
7.3.1.3 Radial Runout Control 402
7.3.2 Control of Wormwheel Measuring Values 402
7.3.2.1 Pitch Control 402
7.3.2.2 Tooth Profile Control 402
7.3.2.3 Radial Run-Out Control 402
7.3.2.4 Tooth Thickness Control 403
7.3.2.5 Composite Deviation Control 403
7.3.3 Measuring Values Control of Worm Gear Pair 403
7.3.3.1 Centre Distance Control 403
7.3.3.2 Backlash Control 404
7.4 Forces, Power Losses and Efficiency of Worm Gear Drives 404
7.4.1 Forces Acting on Worm Gear Pair 404
7.4.2 Power Losses and Efficiency of Worm Gear Pair 406
7.5 Load Capacity of Worm Gear Pair 409
7.5.1 Wear Load Capacity 409
7.5.1.1 Calculation of Expected Wear 410
7.5.1.2 Permitted Wear 413

7.5.2 *Pitting Load Capacity* 414
7.5.3 *Heating Load Capacity* 415
7.5.3.1 *Heating Load Capacity at Bath Lubrication* 416
7.5.3.2 *Heating Load Capacity at Spray Lubrication* 416
7.5.4 *Wormwheel Bulk Temperature* 417
7.5.4.1 *Wormwheel Bulk Temperature in Bath Lubrication* 417
7.5.4.2 *Wormwheel Bulk Temperature in Spray Lubrication* 417
7.5.5 *Wormwheel Tooth Root Load Capacity* 418
7.5.5.1 *Shear Stress in Wormwheel Tooth Root* 418
7.5.5.2 *Shear Fatigue Limit of Wormwheel Tooth* 419
7.5.6 *Load Capacity for Worm Shaft Deflection* 420
7.6 Elements of Worm Gear Drive Design 421
7.6.1 *Design Procedure* 421
7.6.1.1 *Previous Choices* 421
7.6.1.2 *Dimensioning the Worm Gear Pair* 422
7.6.2 *Design Details of Worm Gear Drive* 424
7.7 List of Symbols 427
7.7.1 *Subscripts to Symbols* 428
7.7.2 *Combined Symbols* 429

Further Reading **433**

Index **437**

Preface

Since gear drives operate with a power efficiency significantly higher than any other mechanical drive, or any electrical, hydraulical or pneumatical power transmission, they have the widest use in transforming rotary motion from the prime mover to the actuator, and their importance is growing day by day. Although efficiency is not the only criterion for choosing the type of transmission, the gear drive, due to its robustness and operational reliability, presents an inevitable component of most mechanical engineering systems. Gear drives are known to be highly demanding in design, manufacture, control and maintenance.

The entire field is well provided with standards, books and journal and conference papers. Thus, why a necessity for this book? There are three main reasons:

1. Much knowledge has lost its validity through the statute of limitations, so it needs to be renewed. This book incorporates up-to-date knowledge.
2. Despite the body of data available through the Internet, there is obviously still a lack of real knowledge. Namely, a basic knowledge is necessary for one to be able to apply the data. By collecting the data and by using the gear standards, a designer can get all the necessary information for gear drive design. Nevertheless, if someone wants to become a gear drive designer, he must primarily have basic knowledge. This book is conceived to enable both the basic knowledge and the data necessary to design, control, manufacture and maintain gear drives.
3. There is no single book so far which incorporates almost all types of gears and gear drives: spur, helical, bevel and worm gear drives and planetary gear trains.

This book is written with the presumption that the reader has a basic knowledge of mechanics and general mechanical engineering. It is primarily addressed to graduate and undergraduate students of mechanical engineering and to professionals dealing with the manufacturing of gears and gear drives. For all of these, it is supposed to be a primary text. Groups with an occasional need for this material are students of industrial engineering, technology, automotive engineering, students of marine engineering, aviation engineering and space engineering and professionals in control and maintenance. The objective of this book is to provide all of these with everything they need regarding the subject matter in a single book: (i) a background for dealing with gears and gear trains (classification, power, torque, transmission ratio distribution), (ii) a complete geometry and kinematics for almost any type of gears and gear drives, (iii) assessments of load capacities in accordance

with recent standards, including the calculation of micro-pitting load capacity, (iv) directions and suggestions for the practical design of gears and gear drives, (v) detailed instructions and formulae for determining the tolerances and procedures for measuring and controlling the accuracy of drives and their members in accordance with the latest standards. The reading matter is accompanied with a large number of figures and every important formula is derived and discussed.

This book consists of seven chapters. The first chapter introduces the reader to the fundamental parameters of mechanical drives – transmission ratio, power, efficiency, torque and rotational speed – and explains the way for determining them. The classification of mechanical drives and gear drives is also included. The second chapter explains in depth the geometry of cylindrical gear toothing as the basis of the entire field of gear drives, beginning with the idea of rolling, through the manufacturing of gears, the mesh and interference of teeth, tooth modifications, to the gear tolerances. The third chapter deals with the integrity of cylindrical gears, presenting the ways of calculating the load capacities for pitting, tooth root strength, scuffing and micro-pitting. In the fourth chapter the cylindrical gear drive design process is suggested and the selection of gear materials and their heat treatment are explained in depth, as well as gear drive lubrication and the efficiency and temperature of the lubricant. The fifth chapter deals with bevel gear drives: geometry, manufacturing, control, tolerances and load capacity checks. Crossed gear drives are also explained. In the sixth chapter simple planetary gear trains are first presented: transmission ratio, torques, efficiency of power and branching. Special trains, like harmonic and composed trains and also coupled, closed and reduced coupled trains are explained, as well as planetary reducers. The seventh chapter deals with worm gear drives: their geometry, manufacture, deviation control and load capacity assessments for the wear, pitting, heating, wormwheel tooth root and worm shaft deflection.

The book assumes that the reader is familiar with the metric (SI) system of units. However, some remarks are given herein: since standard modules are given in millimetres, all gear dimensions should be expressed in millimetres as well. Hence, in all equations where only length units appear, all physical quantities are to be substituted in millimetres. The exceptions are the allowance equations, where gear dimensions are to be substituted in millimetres to obtain the allowance in microns. In other equations, where the dimensions of physical quantities are not only their lengths, the SI scale of units should be applied and gear dimensions should be substituted in metres, regardless of being marked in millimetres in the list of symbols at the end of each chapter. Relationship equations make an exception where the units of both sides of the equation are not the same. In each such equation the units of physical quantities (those which are to be substituted) are specified, as well as the unit of physical value obtained on the left side of the equation.

Acknowledgments

Boris Obsieger, Technical Faculty, University of Rijeka, Croatia

Irma R. Sharma, Hindustan Motors, Noida, India

Josip Obsieger, Tehnical Faculty, University of Rijeka, Croatia

Jože Flašker, Faculty of Mechanical Engineering, University of Maribor, Slovenia

Srđan Podrug, Faculty of Mechanical Engineering, Electrical Engineering and Naval Architecture, University of Split, Croatia

Srečko Glodež, Faculty of Physical Sciences, University of Maribor, Slovenia

Stanislav Pehan, Faculty of Mechanical Engineering, University of Maribor, Slovenia

Zoran Ren, Faculty of Mechanical Engineering, University of Maribor, Slovenia

U.S. Well - Exhibit 2012
Liberty v. U.S. Well - IPR2025-00066
Page 10 of 52

1

Introduction

1.1 Power Transmissions and Mechanical Drives

Mechanical power transmissions[1] consist of units which, in distinction from electrical, pneumatic and hydraulic ones, transfer power from the prime mover to the actuator (operational machine or operational member) with the assistance of *rotary motion*. These units are called mechanical drives and are situated between the prime mover and the actuator (Figure 1.1). The drive is connected with both the prime mover and the actuator by couplings or clutches forming an entirety whose function is defined by the purpose of the actuator.

The embedding of a power transmission to link the prime mover and the machine operating member can be due to a number of reasons:

- The required speed of the machine operating member very often differs from the speeds of the standard prime movers.
- One prime mover has to drive several actuators.
- The driven side speed has to be frequently changed (regulated), whereas the prime mover cannot be used to full advantage for this purpose.
- Certain periods of the driven side operation may require torques far from those obtained on the motor shaft.
- As a rule, standard motors are designed for uniform rotary motion, while operating members have sometimes to move with varying speed or periodic halts.
- If a resonant vibration of some member in the chain of power transmission cannot be solved in any other way, the frequency of rotary motion can be changed by building-in a drive.
- Sometimes considerations of safety, convenience of maintenance or the dimensions of the machine, especially if the prime mover and operational machine shaft axes are not coaxial, do not allow the direct coupling of the prime mover shaft with operating member.

[1] The power is a feature of some machine or device and cannot be transmitted. Actually, only the energy is transmitted, but it is globally common to say that the power is transmitted.

Gears and Gear Drives, First Edition. Damir Jelaska.
© 2012 John Wiley & Sons, Ltd. Published 2012 by John Wiley & Sons, Ltd.

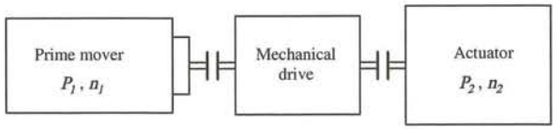

Figure 1.1 Schematic account of a mechanical drive application

The capital task of the designer is to select such an assembly 'prime mover – transmission (drive)' which should optimally meet the needs of the operational machine or member. This act of choosing is a complex task, whose solution depends on: (i) accessibility of the energy source and its price, (ii) efficiency of the entirety of prime mover – transmission – operational machine, (iii) investment costs, (iv) operational machine features, primarily the (v) variability of its speed of rotation, (vi) service conditions, (vii) drive maintainability and so on. Within the framework of this task, a particularly complex problem is defining the transmission: mechanical or some other? This question is beyond the scope of this book, but generally it may be affirmed that the basic advantage of mechanical drives in relation to all the others is their very high efficiency, which is becoming more and more important day by day.

The comparative advantages offered by possible transmissions and drives are outlined in Table 1.1 which gives only a general illustration. Recently, a prominent feature in power transfer has been the extensive employment of electric, hydraulic and pneumatic transmissions. Frequently, such transmissions together with mechanical drives are simultaneously used to actuate various mechanisms. The proper choice of a drive for each specific case can be made only by comparing the technical and economical features of several designs.

The mechanical drive driving shaft receives power P_1 at speed of rotation n_1 from the prime mover driven shaft, and the mechanical drive driven shaft supplies power $P_2 < P_1$ at

Table 1.1 Advantages of transmissions and drives

Advantage	Transmission		Mechanical drive		
	Electric	Hydraulic	Pneumatic	Friction	Mesh
Centralized power supply	+		+		
Simplicity of power transmission over large distances	+				
Easy accumulation of power			+		
Step by step speed change over a wide range	+			+	+
Stepless change over a wide range	+	+		+	
Maintaining accurate transmission ratio					+
High speed of rotation	+		+		
Simplicity of machine designed for rectilinear motion		+	+	+	+
No effect of ambient temperature	+		+		+
Comparatively high practically obtainable loads acting upon actuators of machine		+			+
Easy control, automatic and remote	+				

speed of rotation n_2 to the operational machine driving shaft. The difference $P_1 - P_2 = P_L$ is called power loss and the ratio:

$$\eta = \frac{P_2}{P_1} = \frac{P_1 - P_L}{P_1} = 1 - P_L/P_1$$

is called efficiency; it takes a special place amongst power transmission characteristics because it shows unproductive power expenditure and so indirectly characterizes the wear of the drive and its warming up – the capital problems in power transmissions. Warming up causes strength and lifetime decrease of drive parts. Their corrosion resistance and the functional ability of lubricant are also imperilled. The importance of efficiency is raised to a power by the global lack of increasingly expensive energy and its value also decisively affects the price of the drive.

The power loss consists of constant losses which on the whole do not depend on load, and variable losses which on the whole are proportional to the load. The value of constant losses approximates the power of idle run, that is, the power needed to rotate the drive at $P = 0$ on the driven shaft. It depends on the weight of the drive parts, the speed of rotation and the friction in the bearings and on other surfaces of contact.

The second fundamental parameter of a mechanical drive is the *transmission ratio i* defined as the ratio of its driving n_1 and driven n_2 shaft speeds of rotation or angular speeds:

$$i = \frac{n_1}{n_2} = \frac{\omega_1}{\omega_2}. \tag{1.1}$$

If $i > 1$ ($n_1 > n_2$) the mechanical drive is called an *underdrive* and its member is called a *reducer*. It reduces the speed of rotation and the transmission ratio is also called a speed reducing ratio. If $i < 1$ the mechanical drive is called an *overdrive*, its member is called a *multiplicator* and the transmission ratio is also called a speed increasing ratio. It multiplies the speed of rotation. An overdrive usually works less efficiently than an underdrive. This is especially true for a toothed wheel gearing.

1.2 Classification of Mechanical Drives

The basic division of mechanical drives falls into:

- *Drives with a constant transmission ratio.*
- *Drives with a variable transmission ratio.*

In **constant transmission ratio drives**, the constant speed of driving shaft rotation results in a constant speed of driven shaft rotation, $n_2 = n_1/i$. Their design should, as a rule, include at least the following data: (i) transmitted power of the driving (P_1) or driven (P_2) shaft or related torques, (ii) speed of rotation (rpm) of the driving (n_1) and driven (n_2) shaft, mutual location of the shafts and distance between them, (iii) overall dimensions and drive operating conditions, especially the dependence of driven shaft rpm or torque on time.

In general, this design has several solutions, that is, given conditions can be used to develop drives of various types. All possible designs should be compared according to their efficiency, weight, size, original and operational costs in order to select the most advantageous one. Some general considerations, mainly the available experience of design,

U.S. Well - Exhibit 2012
Liberty v. U.S. Well - IPR2025-00066
Page 12 of 52

Table 1.2 Limit parameters of mechanical drives

Drive type	Transmission ratio	Efficiency	Power (MW)	Rotational speed (min^{-1})	Peripheral speed (m/s)	Ratio mass/power (kg/kW)
Cylindrical gears	45	0.99	35	100 000	40	0.2 . . . 1.0
Planetary gear trains	1000	0.996	65	150 000	200	0.4 . . . 1.8
Bevel gears	8	0.98	4	50 000	130	0.6 . . . 2.5
Hypoid gears	50	0.90	1	20 000	50	0.7 . . . 3.0
Crossed gears	100	0.95	0.08	20 000	50	1.5 . . . 3.0
Flat belt	20	0.98	3.6	200 000	120	1.5 . . . 6.0
V-Belt	15	0.94	4	8000	40	1.0 . . . 5.0
Worm drives	100	0.98[a]	1.5	50 000	70	0.2 . . . 4.5
Friction drives	8	0.98[b]	0.25	10 000	50	8 . . . 30
Chain drives	15	0.99	5	30 000	40	6 . . . 10

[a] Only for small transmission ratios.

[b] Values are related to planetary friction drives.

manufacture and operation of various drives enables us to outline generally the limits of priority application of these drives.

Therefore, the designer must take into account the limit values of main parameters which the mechanical drive can reach. These parameters are the maximum values of transmission ratio, efficiency, power and speed of rotation. For underdrives, they are presented in Table 1.2.

However, these limits are of a temporary nature: as new materials are produced and manufacturing methods are improved, our knowledge of processes taking place in transmission becomes deeper and designs are perfected to suit broader fields of application.

For overdrives, these values are considerably smaller; such drives have a poor performance. It primary refers to efficiency and transmission ratio, but vibrations and noise levels are also much greater, especially in gear drives. It is due to the reasonable and experimentally approved fact that, with a similar error in the manufacture of the two meshing wheels, the driving wheel of greater diameter (in overdrive) causes larger angular accelerations (causing dynamic impacts) on the smaller driven wheel, while the reverse is applied to an underdrive.

Mechanical drives with a constant transmission ratio are divided into: (i) drives with immovable axes – classical mechanical drives – and (ii) drives with movable axes – planetary mechanical trains.

According to the mode in which they transmit motion from the driving wheel to the driven one, **mechanical drives with immovable axes** fall into the following types:

- **Transmissions using friction:** with direct contact of wheels (friction drives) or with a flexible connection (belt drives).
- **Transmissions using mesh:** with direct contact (toothed and worm gears) or with flexible connection (chain and gear-belts drives).

This classification is clearly presented in Table 1.3.

Table 1.3 Main classification of classical mechanical drives with constant transmission ratio and immovable axes

		Mutual position of driving wheel and driven wheel	
		Indirect	Direct
Mode of motion transmittion	Friction	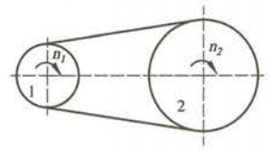 belt drive	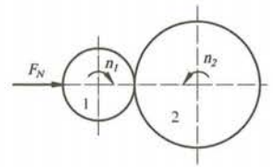 friction drive
	Mesh	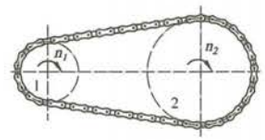 chain drive	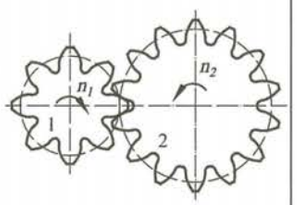 gear drive

Any individual drive is basically composed of a pair of wheels: gear wheels, rollers, belt pulleys and sprockets. It can operate on its own or can be built into mechanical trains of various machines and instruments and made in the form of an individual drive enclosed in a special housing. It can be also joined with other individual drives, making a multi-stage mechanical drive (see Section 1.4).

It is appropriate to mention that $i = \text{const}$ classical friction drives are no longer in use. They are included in the classification because they can be still found in machinery plants.

Figure 1.2 presents simple examples of the three main types of mechanical drives with immovable axes: gear drive with a constant transmission ratio (Figure 1.2a), belt drive with a stepless change of transmission ratio by the help of an axially movable belt (Figure 1.2b), gear drive with a step by step change of transmission ratio by the help of an axially movable set of gears 1 and 3 (Figure 1.2c).

Planetary mechanical trains are mechanical drives where at least one wheel (planet) has movable axes and, when meshed with one or more (central) wheels with immovable (common) axes, it turns around them. The planets are joined together into the planet carrier which has its own shaft. By the mode in which they transmit the motion, that is, by the type of wheel, planetary trains are divided into planetary gear trains (see Chapter 6) and planetary friction trains. Both of them have the same kinematics.

Except for their high price and the noise they produce, gear drives have an advantage over all other drives in all features, especially in operational safety and endurance, efficiency and smaller dimensions. This is why gear drives, although very exacting in design and

U.S. Well - Exhibit 2012
Liberty v. U.S. Well - IPR2025-00066
Page 13 of 52

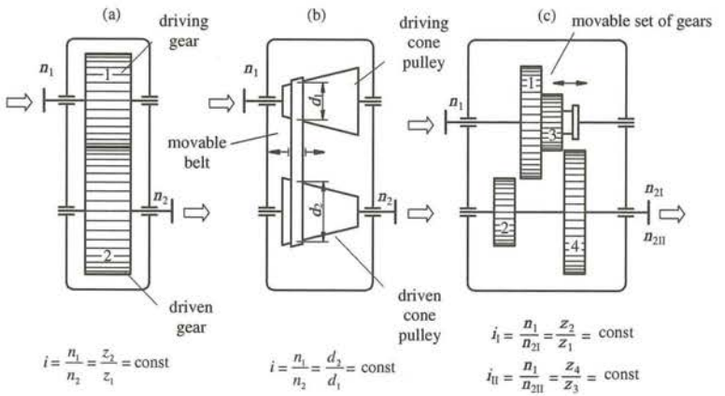

Figure 1.2 Sample types of mechanical drives with immovable axes: (a) constant transmission ratio, (b) stepless change of transmission ratio, (c) step by step change of transmission ratio

technology of production, make up approximately 80% of all mechanical drives (see diagram in Figure 1.3).

In **variable transmission ratio drives**, the constant speed n_1 of driving shaft rotation results in a variable speed n_2 of driven shaft rotation. If n_2 changes are *stepless*, such drives are called *continuous variable speed drives* or *variators*. The ratio drive is changed by a change in the mutual position of the wheels (in friction variators) or by a change in the belt position (in *belt variators*; see Figure 1.2b). Modern *gear planetary variators* are able to achieve a practically infinite range of regulation besides reverse.

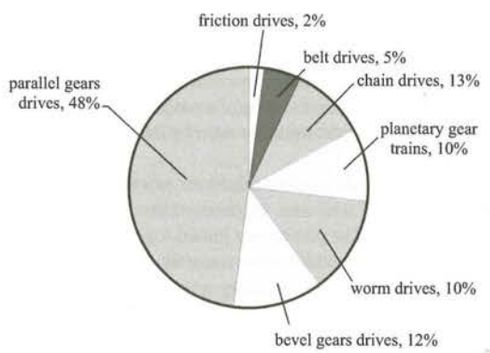

Figure 1.3 Global spread of mechanical drives towards the end of 2005

Mechanical drives with a *cyclically variable transmission ratio* are realized mostly by means of gear pairs with gears of an elliptic or hypocycloid form (see Figure 1.6). A cyclic rotary motion can also be achieved by a segment gear drive (see Figure 1.7a); and an alternate rectilinear motion can be obtained by engaging two toothed racks with driving segment gear (see Figure 1.7b).

There are also *gear drives with cyclically variable centre distance* which, beside a variable transmission ratio, enable a change in the direction of rotation of the driven shaft (reverse) (see Figure 1.10).

Mechanical drives with a *step by step ratio change* are mostly appropriate for the gearboxes of automotive vehicles and machine tools. They function by the principle of changeable or axially movable gears which produce a transmission ratio depending on which of them is in mesh, that is, depending on which of them transfers the motion (see Figure 1.2c).

There are also *planetary gear variators* which, coupled with friction variators, can reach a practically limitless regulation range and change in the direction of revolution (reverse). Planetary gear drives with a step by step change of transmission ratio are known as *planetary gear-boxes*.

The application of mechanical drives with a changeable transmission ratio is always adequate when the prime mover is not able to change the speed of rotation in the manner required by the operational machine. An accustomed application is found in constant power drives at a larger range of speed of rotation and always when it is necessary to obtain the designed high precision transmission ratios. It is important to mention that regulation and control of speed at constant torque is more efficient by electric motor regulation than by mechanical drive.

1.3 Choosing a Mechanical Drive

A basic presumption in choosing a mechanical drive is the designer's good knowledge of all types of drives: their features and applications. Only in such a case he can correctly predict what type of drive should be the most appropriate one when the prime mover and operational machine are already determined.

The first step in the process of mechanical drive design is to select as much data as possible in order to outline the drive and to dimension its parts correctly. This information refers to nine basic fields: basic function data of the drive, prime mover data, actuator data, drive manufacture data, load data, user requirements, lubrication, environment and assembly and maintenance.

Basic function data of a drive:

- Driving and driven axes rotational speeds and nature of transmission ratio: constant or not; stepped or not?
- Transmission ratio variation.
- Reverse: yes or no?
- Types of prime mover and operational machine and their power and torque characteristics.
- Ordering party requests with regard to type of drive, built in position, rotational speed limits, prime mover, establishments and so on.
- Operational machine position in regard to prime mover: is it changeable; what are the limits?

U.S. Well - Exhibit 2012
Liberty v. U.S. Well - IPR2025-00066
Page 14 of 52

Prime mover data:

- Speed of rotation.
- Consequences of machine damage or breakdown.
- Is there a need to take into account the machine overthrowing?
- What are the sizes of intensity and frequency and duration of service impact?
- What maximum torque can the prime mover reach; and could it cause a catastrophe? Is there an overload safeguard?

Operational machine (member) data:

- Speed of rotation and its change,
- Intensity, frequency and duration of service impact; load spectrum,
- Intermittency, that is, operational hours per day,
- Consequences of machine damage or breakdown.

Data needed for drive manufacture:

- Material selection limits,
- Tools and machines needed for drive manufacture,
- Limits in usage of machine tools, heat treatment furnaces and the like,
- Are there the technologies predicted that we do not master?

Load data:

- Is there any axial force on the driving or driven shaft?
- How is the drive fixed and what are the values of the forces arising from that?
- Other forces transferring to environment.

Ordering party requests, conditions of taking over:

- Driving and driven axes clutches,
- Design standards,
- Noise level, minimum efficiency, testing.
- Drive design requests: forged or welded gear body, cast or welded housing, joint between gear body and rim,
- Safety requests,
- Special directions in drive design,
- Conditions of drive transfer,
- Reserve price,
- Terms of delivery.

Lubrication:

- Is the designer limited in lubricant selection?
- Mineral or synthetic lubricant?

- Independent or central lubrication?
- Cooling requests: fresh- or sea-water, air or water emitted into the environment? What is the temperature of operation? Central cooling equipment or an independent unit?
- Drive operation control.

Environment, drive placing:

- Placing of the drive: open or enclosed space?
- Installation limits.
- Is there enough space around the drive?
- Substructures: are they taken together for the prime mover and actuator?
- Can there be difficulties in transferring the drive at the installation place?
- Room temperature.

Maintenance:

- Predicted type of maintenance.
- Lifetime of the drive and its components.
- Which diagnostic method is predicted?
- Is there a request for special access to certain components of the drive?
- Is there a request for a list of critical parts?
- Is it required to deliver the most necessary spare parts?
- How the drive should be coloured?

When there is agreement between the designer and the ordering party on the listed data and dilemmas, or at least on most of them, it is customary to write it in the form of a document. It is often only a morally required document but, by arrangement, it can also become a materially required document – a constituent part of the contract for the manufacture and delivery of the drive.

1.4 Multi-Step Drives

Simple mechanical drives with a single pair of wheels, like those depicted in Table 1.1, are called one-stage drives. Their transmission ratio is limited and a larger one is often required. The reduction is then obtained in a few stages in the way that the driven shaft of each particular stage is at the same time the driving shaft of the next stage. Such a drive is then called a multi-step drive.

It is understandable that each shaft can, in principle, drive one operational machine. In Figure 1.4 a fictitious, general multi-step mechanical drive is presented, which consists of prime mover PM, n wheels with corresponding shafts, that is, with $n/2$ stages and k operational machines. The first stage consists of the pair of spur gears 1, 2 and operational machine OM_1 connected to gear 2 shaft; the second stage is a pair of spur helical gears 3, 4 and operational machine OM_2 connected to gear 4 shaft and so on; the last stage is the V-belt drive with two V-belt pulleys, each with three V-belts transferring the power to the OM_k operational machine. The OM_{k-1} operational machine is driven by the $(n-1)^{th}$ wheel.

U.S. Well - Exhibit 2012
Liberty v. U.S. Well - IPR2025-00066
Page 15 of 52

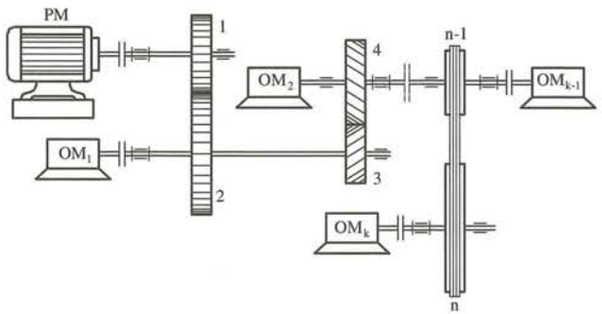

Figure 1.4 Schematic account of a multi-step drive

When designing multi-step drives it is necessary to determine the required power of the prime mover for the given power of the operational machine, the power losses (i.e. efficiency) and a transmission ratio. Also, the torques of any shaft must be determined in order to dimension all the related components. For such a purpose, it is necessary to identify the relation between the total transmission ratio and the partial ones within each stage, the relation between the total efficiency and the partial ones within each stage and the power balance, that is, the relation between the powers of the prime mover and the operational machine.

Total transmission ratio i_{tot} can be written as:

$$i_{tot} = i_{1,n} = \frac{n_1}{n_n} = \frac{\omega_1}{\omega_n} = \frac{\omega_1}{\cancel{\omega_2}} \cdot \frac{\cancel{\omega_2}}{\cancel{\omega_4}} \cdot \frac{\cancel{\omega_4}}{\cancel{\omega_6}} \cdot \ldots \cdot \frac{\cancel{\omega_{n-2}}}{\cancel{\omega_{n-1}}} \cdot \frac{\cancel{\omega_{n-1}}}{\omega_n} \tag{1.3}$$

where the angular speeds of particular wheels are signed with ω. It follows that:

$$i_{tot} = i_{1,n} = i_{1,2} \cdot i_{3,4} \cdot i_{5,6} \cdot \ldots \cdot i_{n-1,n} = i_{I} \cdot i_{II} \cdot i_{III} \cdot \ldots \cdot i_{n/2} = \prod_{j=1}^{n/3} i_j \tag{1.4}$$

where the partial transmission ratios are signed with i_j. It is clear now that the total transmission ratio equals the product of the particular stages' partial transmission ratios.

In the same way the total efficiency is obtained:

$$\eta_u = \eta_{1,n} = \eta_{1,2} \cdot \eta_{3,4} \cdot \eta_{5,6} \cdot \ldots \cdot \eta_{n-1,n} = \eta_{I} \cdot \eta_{II} \cdot \eta_{III} \cdot \ldots \cdot \eta_{n/2} = \prod_{j=1}^{n/2} \eta_j \tag{1.5}$$

that is, the total efficiency equals the product of the particular stages' partial efficiencies.

From the mechanical drive energy balance, which declares that the energy produced in the prime mover equals the sum of energies spent by all operational machines plus their power losses, it follows that the *power balance* of a drive is the power of the prime mover P_{PS} which

equals the sum of the operational machines powers enlarged for the power losses from driving to the single driven operational machine:

$$P_{PM} = \frac{P_{OM1}}{\eta_{1,2}} + \frac{P_{OM2}}{\eta_{1,4}} + \cdots + \frac{P_{OM,k+1}}{\eta_{1,k-1}} + \frac{P_{OM,k}}{\eta_{1,k}} = \sum_{i=1}^{k} \frac{P_{OM,i}}{\eta_{1,i}} \tag{1.6}$$

where P_{OM1}, P_{OM2}, . . . , P_{OMk} are the powers of the operational machines, $\eta_{1,k}$ is the efficiency at power transmission from the prime mover to the kth (last) operational machine, $\eta_{1,k} = \eta_u$ and k is the number of operational machines.

The power P_m at an arbitrary mth wheel equals the power of the prime mover decreased for the powers spent by that prime mover for driving the operational machines and for the power losses from the prime mover to the mth wheel:

$$P_m = \left[P_{PM} - \sum_{i=1}^{N} \left(P_{OM,i} / \eta_{1,i} \right) \right] \cdot \eta_{1,m} \tag{1.7}$$

where $P_{OM,i}$ is the power of an ith (arbitrary) operational machine located between the prime mover and the mth wheel, $\eta_{1,i}$ is the drive efficiency from the prime mover to the ith operational machine located before the mth wheel, N is the number of operational machines before the mth wheel and $\eta_{1,m}$ is the drive efficiency from the prime mover to the mth wheel.

The torque T_m at an arbitrary mth wheel is equal to the ratio of its power and angular speed:

$$T_m = \frac{P_m}{\omega_m} \tag{1.8}$$

$$\omega_m = \frac{\omega_1}{i_{1,m}}. \tag{1.9}$$

As an example, the gear 4 torque will be determined. Its power is:

$$P_4 = (P_{PM} - P_{OM1}/\eta_1) \cdot \eta_I \cdot \eta_{II}, \tag{1.10}$$

while the angular speed is:

$$\omega_4 = \frac{\omega_1}{i_I \cdot i_{II}}. \tag{1.11}$$

The torque is now:

$$T_4 = \frac{P_4}{\omega_4}. \tag{1.12}$$

Just like the power, the torque is divided in two parts: left and right from gear 4. Left from gear 4 the power equals the operational machine OM$_2$ power:

$$P_{4L} = P_{OM2}, \tag{1.13}$$

the torque is $T_{4L} = P_{OM2}/\omega_4$, while right from gear 4 the power P_{4D} equals

$$P_{4R} = [P_{PM} - P_{OM1}/\eta_I - P_{OM2}/(\eta_I \cdot \eta_{II})] \cdot \eta_I \cdot \eta_{II} \tag{1.14}$$

1.5 Features and Classification of Gear Drives

1.5.1 Features of Gear Drives

The gear is defined as a toothed member designed to transmit motion to or receive motion from another toothed member, by means of successively engaged teeth. The two gears are rotatable around axes whose relative positions are fixed, and they form a gear pair. The torque from the driving shaft to the driven one in a gear drive is transmitted due to the pressure of the teeth of the pinion (the gear in a pair which has the smaller number of teeth) on those of the wheel (the gear in a pair which has the greater number of teeth). To preserve a constant transmission ratio, the teeth of both pinion and wheel should have conjugate profiles. This condition is observed if the teeth of the mating gears are correctly meshed with the standard basic rack teeth which are used as a basis for defining the tooth dimensions.

Gear drives blaze the trail to other types of mechanical drives and by the frequency of building in they keep mastery. These are the reasons:

- High reliability and durability of its components,
- Less dimensions compared to transmitted loading,
- High efficiency: 98–99% for regular (one step) drive and even up to 99.6% for planetary drives,
- Power transfer is slideless and overloading is possible,
- Simple maintenance.

An essential advantage of (involute) gear drives is that the gears can be corrected to improve the characteristics of the drive with a minimum weight. The essence of correction lies in the fact that different portions of the involute of the given base circle are used to describe the active profile of the teeth if certain characteristics of engagement are to be changed.

The imperfections of gear drives are the noise and possible vibrations they produce and high costs of production.

Gears have to satisfy high requirements on the power they transmit, on the speed of rotation, on the precision of their manufacture and on the accuracy of their operation. Therefore, it is not easy to produce quality gear drives; for that, it is necessary to have a great knowledge and great experience. The unwritten rule is that the quality of the gear drives produced is implicit in the level of industrial development of the country or region.

1.5.2 Classification of Gear Drives

The basic classification of gear drives is: (i) those having immovable axes and (ii) those having rotationally movable axes – planetary gear drives.

Gear drives with immovable axes – classical gear drives, are classified into:

- Gear drives for parallel shafts,
- Gear drives for inclined shafts,
- Gear drives for shafts having skewed axes,
- Gear drives with step by step change of transmission ratio by help of axially movable set of gears (see sample drive in Figure 1.2c).

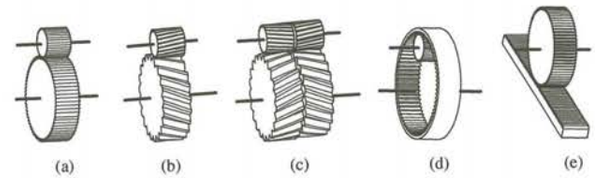

Figure 1.5 Gear drives for parallel shafts: (a) spur gear drive, (b) helical gear drive, (c) double helical gear drive, (d) internal gear drive, (e) rack drive

Gear drives for parallel shafts (Figure 1.5) are realized with:

- *Pairs of cylindrical gears* with external toothing: with straight teeth (spur gears; Figure 1.5a), with helical teeth (Figure 1.5b), with double helical (or sometimes herringbone) teeth (Figure 1.5c),
- *Pairs of internal toothing gears* which consist of a smaller gear (pinion) with an external and greater gear (wheel) with internal toothing (Figure 1.5d),
- *Rack drive* – external toothing (pinion) gear mated with toothed rack (infinity diameter gear) in order to transform rotary motion into translatory motion, or vice versa (Figure 1.5e).

Special, rarely applied types of gear drives with parallel axes are gear pairs with a cyclically variable transmission ratio (Figure 1.6). The gears have an elliptic form (Figure 1.6a, b), a coupling of an elliptic and eccentrically situated cylindrical gear (Figure 1.6c) or a hypocycloidal form (Figure 1.6d). Such drives are complex to manufacture and consequently their application is limited.

Segment gear drives can also be involved in this group of gear drives (Figure 1.7). Such drives enable a cyclic rotary motion (Figure 1.7a) or alternately a rectilinear motion of driven member 2 (Figure 1.7b) with continued rotary motion of driving member 1. In both cases, the driving gear is partially toothed (segments gear), and in the drive pursuant to Figure 1.7b the driven member 2 is composed of two toothed racks which are alternately mated with driving

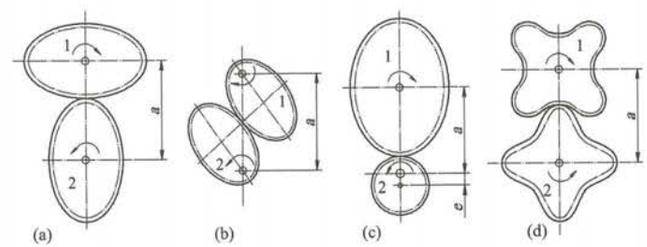

Figure 1.6 Types of drives with non-circular gears: (a) and (b) elliptic forms, (c) coupling of elliptic and eccentrically situated cylindrical gear, (d) hypocycloidal form

U.S. Well - Exhibit 2012
Liberty v. U.S. Well - IPR2025-00066
Page 17 of 52

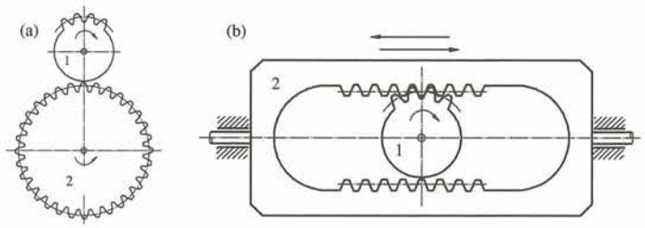

Figure 1.7 Schemes of gear drives with non-circular gears: (a) for cyclic rotary motion, (b) for alternate rectilinear motion

segment gear 1 which has continuous rotation. The result is rectilinear motion first on the left, then on the right side.

Gear drives for inclined shafts are realized with pairs of *bevel gears* having:

- Straight toothing (Figure 1.8a),
- Tangent toothing (Figure 1.8b),
- Curved toothing (to left or right; Figure 1.8c) in the form of an arc, Archimedes spiral, involute, epicycloid or sinusoid.

Gear drives for shafts having skewed axes are realized with:

- Pairs of helical gears with shafts skewed at a certain (mostly right) angle – so-called *crossed gears drive* (Figure 1.9a),
- A *worm drive* consisting of the worm screw, mostly called a worm, and a toothed wheel, mostly called a worm wheel (or worm gear; Figure 1.9b),
- Pairs of hypoid gears – *hypoid drive*. These are the gears whose axodes (rolling bodies) have a hyperboloid form. If the teeth of these hyperboloids are cut with the same normal pitch, a hyperboloid drive is obtained. In practice, only two portions of these hyperboloids are used: the central ones resulting in a crossed gear drive and the edge ones resulting in a hypoid drive (Figure 1.9c). This drive is mostly realized with specially designed bevel gears.

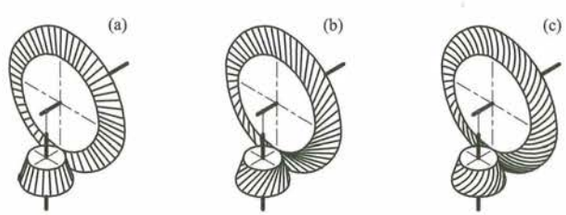

Figure 1.8 Gear drives for inclined shafts: (a) with straight toothing, (b) with tangent toothing, (c) with curved toothing

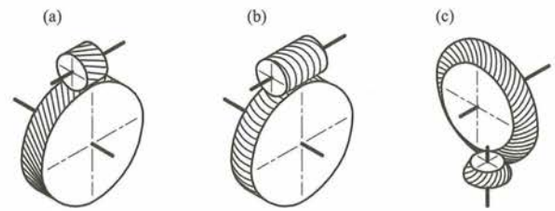

Figure 1.9 Gear drives for shafts having skewed axes: (a) crossed gear drive, (b) worm drive, (c) hypoid drive

Gear drives with movable axis – planetary gear drives, defined as such gear mechanisms having at least one movable axis rotating around some other (basic) axis. They are classified:

a. By number of degrees of rotational freedom:
   - planetary drives with one degree of rotational freedom (real planetary drives),
   - planetary drives with two degrees of rotational freedom (differential drives).
b. By central gear toothing:
   - central gears with external toothing,
   - central gears with internal toothing,
   - one central gear with external and another with internal toothing.
c. By changeability of structure and kinematic features:
   - *uncontrollable drives* (planetary and differential) for the separation of one rotary motion into two or more, or for the composition of several rotary motions into one,
   - *controllable drives* used for the connection or disconnection of two shafts or a prime mover and actuator; for changing the direction of rotary motion (reverse); for a step by step change of transmission ratio – planetary gear boxes; for variable speed drives where (by building-in a simple friction variator with a low range of transmission ratio change connected to an ordinary planetary drive) the planetary variator is obtained with a practically unlimited range of regulation.

Gear drives with cyclically variable centre distance can also be involved in a group of drives with movable axes. Beside the small change in transmission ratio, they enable reverse, that is, alternate rectilinear or rotary motion of the actuator (see Figure 1.10). Here, driving gear 1 has three degrees of rotational freedom: (i) rotation around its own axis, (ii) rotation around actuator 2 with internal toothing and (iii) translation radially towards or opposite, from the axis of toothed actuator 2. Rotation around member 2 is achieved by guiding the roller at the end of gear 1 shaft along channel 3 whose form follows the member 2 crescent form. Radial translation is achieved by means of slider 4. When the driving gear reaches the end position of the 'crescent' (inflection point of the path), the actuator changes the direction of rotation.

This general course of 'Gears and gear drives' examines mechanical gear drives designed mostly for uniform rotary motion, while the 'Planetary gear drives' chapter describes both uniform and partially non-uniform rotary motion. Other types of mechanical drives, as well as electric, hydraulic and pneumatic transmissions are the subject of other courses.

U.S. Well - Exhibit 2012
Liberty v. U.S. Well - IPR2025-00066
Page 18 of 52

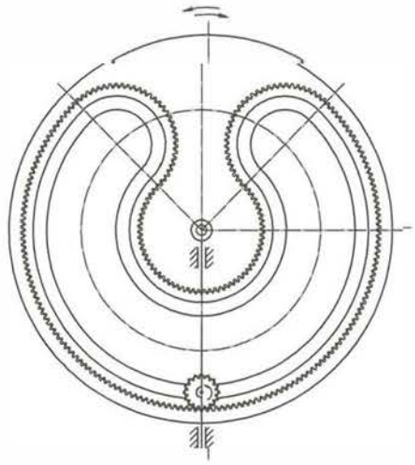

Figure 1.10 Scheme of a gear mechanism for transforming uniform rotary motion into alternate rotary motion (oscillation)

1.6 List of Symbols

Symbol	Unit	Description
i		Transmission ratio
n	min^{-1}	Speed of rotation
P	W	Power
PM		Prime mover
OM		Operational machine
T	Nm	Torque
η		Efficiency
ω	s^{-1}	Angular speed

1.6.1 Subscripts to Symbols

1	Driving gear	L	Left from
2	Driven gear	m	m^{th} wheel
R	Right from	N	Number of operational machines to m^{th} wheel
g	Losses	n	Total number of wheels in drive
j	Arbitrary step	I, II, . . .	First, second, . . . drive step
k	Number of operational machines		

U.S. Well - Exhibit 2012
Liberty v. U.S. Well - IPR2025-00066
Page 19 of 52

6

Planetary Gear Trains

6.1 Introduction

6.1.1 Fundamentals of Planetary Gear Trains

Mechanisms with gears (or rarely – with friction wheels) where one axis is movable are called *planetary mechanisms*. The simplest, rude planetary gear mechanism, Figure 6.1, consists of gear 1, gear 2 and *carrier* V (carrying gear 2). Obviously, rotary motion of gear 1 causes two rotary motions: rotation of gear 2 around its own axis and its rotation together with carrier V, around the axis of gear 1. Those motions are similar to a planet's motion around its own axis and around the sun. Therefore gear 2 is termed as a *planet gear* (henceforth, *planet*), central gear 1 is termed as a *sun gear* and *planet carrier* V is henceforth simply termed as a *carrier*. Any gear having immovable axes is generally termed as a *central gear*, and besides the sun one having external toothing, there is another one having internal toothing, which is termed as an *annulus gear* (Figure 6.1b).

Schemes of planetary gear trains are always presented in axial plane, like those in Figure 6.1. They consist of sun gears, annulus gears, planet gears, carriers, shafts, bearings and couplings. In order to better understand the schemes of trains in further reading, the schemes of those elements are presented in Table 6.1.

The axis around which the central gears and carrier rotate or can rotate is termed the main axis, while members able to rotate around the main axis and thus receive or give rotary motion, that is the torque, are called the *main members*. They can be either movable or immovable. For example, one central gear is frequently fixed (held in rest) to the housing of a drive. That central gear transmits the torque to the housing of a train. If the carrier is held in rest, the planetary gear train (PGT) converts to an ordinary one – no one axis is movable, thus the real PGTs are only these with the central gear held in rest.

In real PGTs (Figure 6.2), commonly at least the three planets (2), uniformly distributed over the periphery of the sun gears (1) and annulus gear (3), are built-in and joined in a shared carrier (4). Due to the clarity of PGT schemes, in its drawings a single planet will be drawn in a further text. The kinematics of the rotary motion remain the same as for more planets.

Gears and Gear Drives, First Edition. Damir Jelaska.
© 2012 John Wiley & Sons, Ltd. Published 2012 by John Wiley & Sons, Ltd.

U.S. Well - Exhibit 2012
Liberty v. U.S. Well - IPR2025-00066

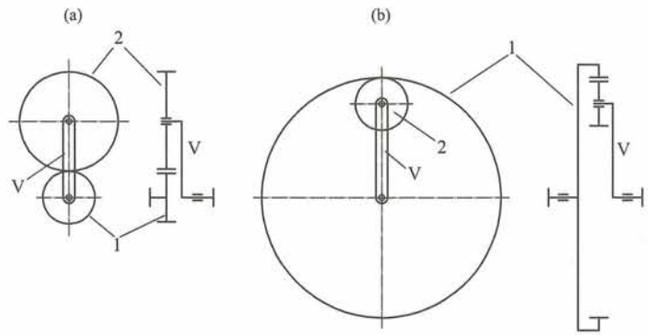

Figure 6.1 Rude planetary mechanisms: (a) central gear with external toothing, (b) central gear with internal toothing

Table 6.1 Schemes of PGT elements

Sun gear connected with shaft	Sun gear not connected with shaft	Annulus gear connected with shaft	Annulus gear not connected with shaft	Carrier bearing supported on planets shaft	Carrier supported on planets bearings	Bearing	Coupling
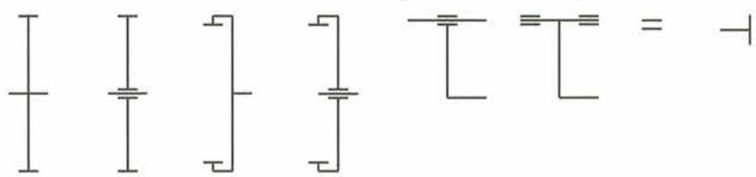							

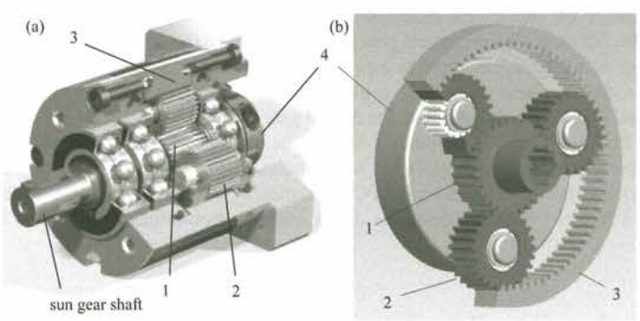

Figure 6.2 Simple planetary mechanism with three planets joined by a carrier: (a) cut of real train, (b) simplified 3-D model (See Plate 1)

Mechanisms with movable axes which consist of same members behave as different trains depending on whether some of the members, and particularly which one is held in rest, that is whether the degree freedom of the rotary motion of a train is reduced. The degree of freedom S for an arbitrary PGT is determined by this equation:

$$S = 3i - 2j - k \tag{6.1}$$

where i is the number of members able to rotate, j is the number of lower kinematic pairs (bearings) and k is the number of higher kinematic pairs (rolling pairs). PGTs having two or more degrees of freedom are termed *differential trains*, and those having one degree of freedom are *real PGTs*.

Any PGT having three main members, but not more than two central gears, is deemed a simple PGT. Pursuant to a common scheme, Figure 6.3, they can have one or two degrees of freedom, depending on whether or not any of main members is held in rest. As an example, in Figure 6.3 no one member is held in rest, thus for $i = 4$, $j = 4$ and $k = 2$, the degree of freedom of motion is:

$$S = 3 \cdot 4 - 2 \cdot 4 - 2 = 2.$$

Such differential trains having two or more degrees of freedom are used for dividing the single rotary motion into two or more, or for joining several rotary motions into one. A common simple differential train having one sun gear, one annulus gear and a carrier with three planets is demonstrated in Figure 6.4.

Designation of a differential, like that of PGTs, consists of: (i) a number designating the numbers of planes in which planets are placed, (ii) a letter sign designating the type of the input central gear (A – sun gear, I – annulus gear), (iii, et seqq.) letter signs of the next central gear (A or I). In such a way, designation of the train in Figure 6.2 is 1AI, the one in Figure 6.3 is 2AA and the one in Figure 6.4 is 2AI.

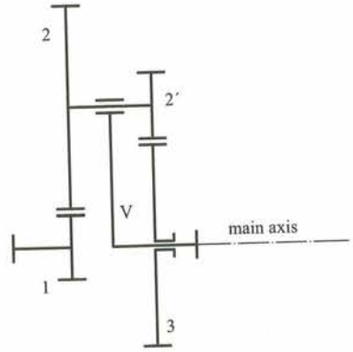

Figure 6.3 Scheme of common simple differential gear train

U.S. Well - Exhibit 2012
Liberty v. U.S. Well - IPR2025-00066
Page 21 of 52

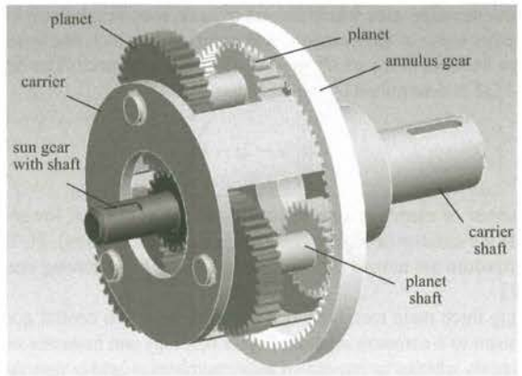

Figure 6.4 3-D scheme of simple differential gear train (See Plate 2)

6.1.2 *Rotational Speeds and Transmission Ratio*

The relations of rotational speeds between the PGT members can be simply determined by the known Willis rule: the ratio of the relative (in regard to the carrier) rotational speeds of two mated gears, similar to the ordinary two-step gear train, is equal to their gear ratio: with a positive sign if the speed directions are same (one of mated gears is internal), and with a negative sign in the case of opposite speed directions (two external gears). In a PGT with all external gears, pursuant to Figure 6.3, for meshed gears 1 and 2, and 2′ and 3, this is obtained:

$$\frac{n_1 - n_v}{n_2 - n_v} = -\frac{z_2}{z_1} \quad \frac{n_{2'} - n_v}{n_3 - n_v} = -\frac{z_3}{z_{2'}} \tag{6.2}$$

where n_1, n_2, $n_{2'}$, n_3 and n_v are rotational speeds of gears 1, 2, 2′ and 3 and of the carrier, respectively; and z_1, z_2, $z_{2'}$ and z_3 are the number of teeth of gears 1, 2, 2′ and 3, respectively.

The rule of sign is also valid for PGTs: the number of teeth of the internal gear is negative. Since one of mated gears in Equation (6.2) can be internal, the sign of their right parts then becomes positive. Thus, there is no need to account for a sign in the Willis Equation (6.2) – those have general validity if the rule of sign is taken into account.

By elimination of $n_2 = n_{2'}$ from Equation (6.2), the base equation of simple PGTs is obtained:

$$n_1 - \frac{z_2 z_3}{z_1 z_{2'}} n_3 + \left(\frac{z_2 z_3}{z_1 z_{2'}} - 1\right) n_v = 0, \tag{6.3}$$

which is usually noted in the form:

$$n_1 - u \cdot n_3 + (u - 1) n_v = 0 \tag{6.4}$$

where:

$$u = \frac{z_2 \cdot z_3}{z_1 \cdot z_{2'}} \tag{6.5}$$

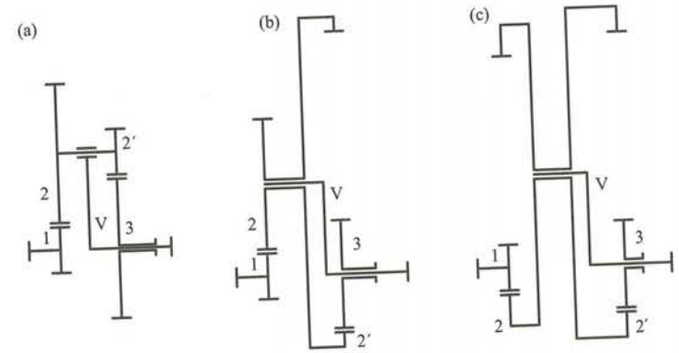

Figure 6.5 Schemes of planetary gear trains 2AA with a set of planets: (a) both external, (b) one external, other internal, (c) both internal

is the *base gear ratio* – gear ratio of the PGT with a carrier held in rest (ordinary coaxial gear drive).

Planetary gear trains can have both central gears as sun gears (Figure 6.5) or annulus gears (Figure 6.6) or one sun and the other annulus gear (Figure 6.7). For any of these layouts, each set of planets can be either both external or one external with the other internal. Also, the carrier can carry only one set of planets; all gears are then placed in a single plane. Further, gears can be bevel or internal bevel. On the whole, there is a number of PGTs, different in design, transmission ratio and efficiency, but the kinematics for all of them are defined by Equation (6.3), that is Equation (6.4).

In a limited sense, PGTs are differential trains with one main member held in rest, thus they have one degree of freedom. Since any of the main members can be held in rest, and each of the others can transmit the motion, there are six base PGTs. Since the train with a carrier held in rest is not deemed a PGT, only four base PGTs remain: two with central gear 1 held in rest and two with central gear 3 held in rest, which are in practice reduced to four

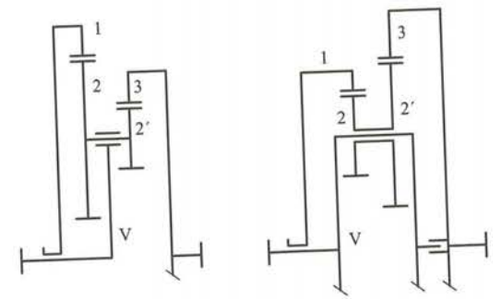

Figure 6.6 Scheme of PGTs 2II

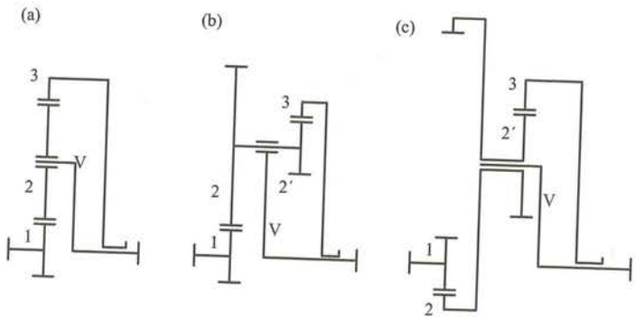

Figure 6.7 Schemes of simple PGTs with sun and annulus gear: (a) 1AI train with no planets 2′, (b) 2AI train, (c) 2AI train with internal teeth planets 2

PGT layouts: A, B, C and D (see Table 6.2). The transmission ratios of these (and all other simple) PGTs are simply obtained from Equation (6.4).

When central gear 3 is held in rest, the driving member can be either central gear 1 or the carrier (Figure 6.8). In the former case, by obviously $n_3 = 0$, in the pursuance of Equation (6.4), the transmission ratio is derived:

$$i_{1v} = \frac{n_1}{n_v} = 1 - \frac{z_2 \cdot z_3}{z_1 \cdot z_{2'}} = 1 - u. \tag{6.6}$$

Obviously, for $u < 0$, it is a question of an reducer with the speed reducing ratio; and, for $u > 0$, it is a question of a multiplier with annulus gear 3, just like that in Figure 6.8 which has a good efficiency for transmission ratios within the range from 6 to 18 and is frequently used for power transmissions.

When, for the same train, the carrier is a driving member, the transmission ratio i_{v1} becomes reciprocal to that in Equation (6.6):

$$i_{v1} = \frac{\omega_v}{\omega_1} = \frac{1}{1-u}. \tag{6.7}$$

Such trains can also be reducers or multipliers, and they are commonly applied only as multipliers with high efficiency.

When central gear 1 is held in rest and the driving member is central gear 3 (Figure 6.9), then from the base Equation (6.4), by $\omega_1 = 0$, the expression for the transmission ratio is obtained:

$$i_{3v} = \frac{n_3}{n_v} = 1 - \frac{z_1 \cdot z_{2'}}{z_2 \cdot z_3} = 1 - \frac{1}{u} \tag{6.8}$$

It is easy to observe that for $u < 0$ (different central gears, sun and annulus), the train is a reducer with the transmission ratio slightly higher than unity, while for $u > 0$ (central gears are both sun or both annulus), the train becomes a multiplier. Due to poor features those trains are rarely applied.

Table 6.2 Transmission ratios, efficiencies and torque ratios of simple planetary trains

A ≡ 2AA			B ≡ 2AI	C ≡ 1AI	D ≡ 2II	
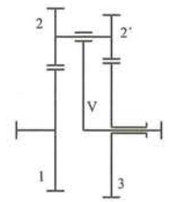			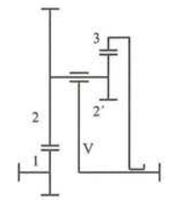	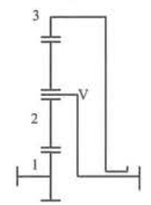	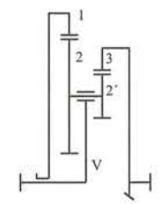	
$u > 1$ Member function			$u < 0$ Transmission ratio $i = \frac{n_{in}}{n_{out}}$	$u < 0$ Power efficiency $\eta_P = \frac{P_{out}}{P_{in}}$	$u > 1$ Torque ratio $i_T = -\frac{T_{out}}{T_{in}}$	
Input	Output	Held in rest				
1	3	V	$i_{13} = u$	$\eta_P = \eta_z$	$i_T = u \cdot \eta_z$	
3	1	V	$i_{31} = \frac{1}{u}$	$\eta_P = \eta_z$	$i_T = \frac{\eta_z}{u}$	
1	V	3	$i_{1v} = 1 - u$	$\eta_P = \frac{1 - u \cdot \eta_z}{1 - u}$	$i_T = 1 - u \cdot \eta_z$	
V	1	3	$i_{v1} = \frac{1}{1-u}$	$\eta_P = \frac{1-u}{1 - \frac{u}{\eta_z}}$	$i_T = \frac{1}{1 - \frac{u}{\eta_z}}$	
3	V	1	$i_{3v} = 1 - \frac{1}{u}$	$\eta_P = \frac{u - \frac{1^*}{\eta_z}}{u - 1}$	$i_T = 1 - \frac{1^*}{u \cdot \eta_z}$	A, D
				$\eta_P = \frac{u - \eta_{z^{**}}}{u - 1}$	$i_T = 1 - \frac{\eta_{z^{**}}}{u}$	B, C
V	3	1	$i_{v3} = \frac{u}{u-1}$	$\eta_P = \frac{u - 1^*}{u - \eta_z}$	$i_T = \frac{u^*}{u - \eta_z}$	A, D
				$\eta_P = \frac{u - 1^{**}}{u - 1/\eta_z}$	$i_T = \frac{u \cdot \eta_{z^{**}}}{u \cdot \eta_z - 1}$	B, C

When in such a train, the carrier is a driving member, by $u > 0$, the reducer can be obtained with an enormous transmission ratio, because, in accordance to Equation (6.4), the following expression for transmission ratio is obtained:

$$i_{v3} = \frac{u}{u-1}. \tag{6.9}$$

To reach the enormous transmission ratio, the denominator has to be close to unity, which is achieved by determining the number of central gears teeth, z_1 and z_3, close to the number

U.S. Well - Exhibit 2012
Liberty v. U.S. Well - IPR2025-00066
Page 23 of 52

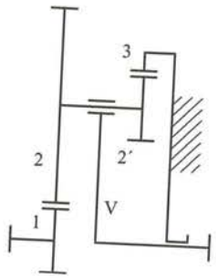

Figure 6.8 Simple PGT 2AI with central gear 3 held in rest

of teeth of their mated planets, z_2 and $z_{2'}$. The most frequently is taken $z_2 = z_1 + 1 = z_3 = z_{2'} - 1$, thus one easily obtains:

$$i_{v3} = z_2^2. \tag{6.10}$$

For example, when $z_2 = 100$, the theoretical transmission ratio becomes $i_{3v} = 10\,000$! Unfortunately, such reducers have low efficiency, so they are not used for power transmissions, but only for transmissions of motion.

The common application is in regulation devices where, for a certain angular shift of a regulatory button, a low turn of the regulated element axle can be achieved, thus a regulated physical value can be put very precisely.

Since the centre distances between the central gears and their planets must be equal, it is clear that one of the gear pairs (z_1, z_2) or $(z_{2'}, z_3)$ must have a profile shift.

Gear trains of such a type (with $u > 0$) are frequently applied with $z_2 = z_{2'}$, thus gears 2 and 2′ are made as a single gear (Figure 6.10). The transmission ratio is then:

$$i_{v3} = \frac{z_3}{z_3 - z_1}, \tag{6.11}$$

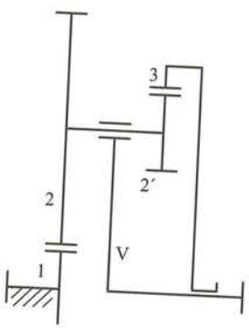

Figure 6.9 PGT with central gear 1 held in rest

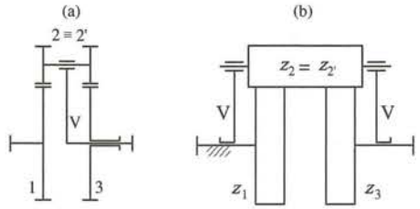

Figure 6.10 Planetary reducer with $z_2 = z_2$: (a) scheme, (b) sketch

so, to increase it, and to more easy fulfil the condition of coaxiality, it is taken that $z_1 = z_3 - 1$. The transmission ratio is then obtained:

$$i_{v3} = z_3 \tag{6.12}$$

meaning that the transmission ratio equals the number of teeth of the driven central gear. Obviously, here also at least one of the gear pairs must have a profile shift.

Due to production savings, identical pairs of gears (z_1, z_2) and $(z_{2'}, z_3)$ are frequently taken. Then, by $z_1 = z_{2'}$ and $z_2 = z_3$ and by $z_2 = z_1 + 1$, that is $z_3 = z_{2'} + 1$, it follows that:

$$i_{v3} = \frac{z_2^2}{2z_2 - 1} \approx \frac{z_2 + 0.5}{2}. \tag{6.13}$$

The transmission ratio of such trains is commonly within the range $i = 15 \ldots 100$ and power efficiencies $\eta = 0.4 \ldots 0.8$.

By braking the carrier, the ordinary two-step coaxial reducer is obtained with a transmission ratio for unity less than the transmission ratio of the PGT with central gear 3 held in rest. Due to dividing the power and torque on the planets, the dimensions of such a train are less and therefore they are sometimes used regardless of the greater number of gears.

In distinction to other simple PGTs, in trains with central gear 1 held in rest, the expressions for power efficiency crucially depend on the type of mated gears (external or internal). For four base combinations of mating the simple PGTs with central gear 1 held in rest, as well as for all other simple PGTs, the equations for transmission ratios, efficiencies and torque ratios are given in Table 6.2. In all equations, it is understood that the central gears, as well as the planets, can have external or internal toothing, that is a positive or negative number of teeth. Thus, the transmission ratios depend only on the base gear ratio u, while mesh efficiencies η_P and torque ratios i_T (as products of efficiencies and transmission ratios) of simple PGTs, besides u, depend also on the type of a train (A, B, C or D) and on the base efficiency η_z defined as the mesh efficiency of the PGT with a carrier held in rest: $\eta_z = \eta_{12} \cdot \eta_{2'3} \approx 0.98$, where η_{12} and $\eta_{2'3}$ are the mesh efficiencies of ordinary gear pairs 1–2, and 2′–3 (see Section 4.2).

The procedure of calculation of the efficiencies and torque ratios given in Table 6.2 is demonstrated in Section 6.1.7.

In order to get a clearer review of the dependences of the base gear ratio on the transmission ratio and efficiency, these are illustrated in Figures 6.11 and 6.12.

From the diagram $i = f(u)$ in Figure 6.11, it can be observed that the transmission ratios i_{v1} of reducers are significantly less than those of other reducers, so they are not

U.S. Well - Exhibit 2012
Liberty v. U.S. Well - IPR2025-00066
Page 24 of 52

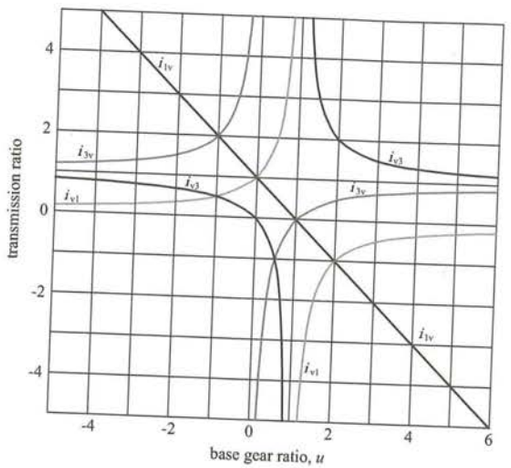

Figure 6.11 Dependences $i = f(u)$ for four base PGTs

used. The same trains, as multipliers, have good transmission ratios, also positive, thus they are frequently used. It can also be observed that in regions $u < -1$ and $u > 2$ the transmission ratios i_{1v} are higher than all others, therefore, beside other advantages, they are frequently applied. It is observed and already known that transmission ratios assume at will a high transmission ratio for $u \approx 1$, but efficiencies then tend to zero. Since for equally small differences of number of teeth, the base gear ratio becomes closer to unity as the number of teeth increases, the level of transmission ratio is limited only by how much the designer is willing to meet a loss of the increased train size and power (due to low efficiency), to achieve the desired transmission ratio.

The efficiency dependence on the base gear ratio, for each of the base PGTs is illustrated by the diagram in Figure 6.12.

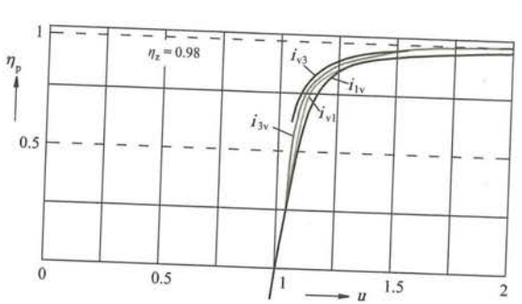

Figure 6.12 Dependences $\eta_P = f(u)$ for four base PGTs

6.1.3 *Features of Planetary Gear Trains*

The application and development of PGTs has been hurriedly progressed in the past 50-odd years. This type of reducer has been applied in all branches of Mechanical Engineering, especially in vehicles, ships, turbine plants, cranes and so on – everywhere required to transmit high power at high speeds, and everywhere where it is necessary to divide or sum the power – in differentials.

PGTs have a number of advantages, but they have a different meaning in different applications:

- Coaxiality of the driving and driven shafts,
- Train with rotational speed up to 100 000 min^{-1} is possible,
- Due to sharing the power to planets, gears are fewer and lighter than the ordinary ones, and the very train is lighter, and dynamical overloads and noise are also considerably less,
- Practically unlimited transmission ratio,
- Relatively high efficiency,
- Robust design of a cylindrical shape enables more appropriate pairing with rotational machines,
- Fewer units can be performed as flanged, thus there is no need for fundaments, clutches and couplings, and assembly is also facilitated,
- They can be designed as: clutched trains (by braking of one member), reverse trains, gear boxes, multiplicators; and by torque converter, brakes and clutches, they can be designed as automatic gear boxes.

The shortcomings of PGTs are:

- More complex design in regard to ordinary gear drives,
- Considerable centrifugal forces appear on planets and their bearings,
- Due to robust design, the control and maintenance are more difficult,
- Due to smaller dimensions, the quantity of lubricant is less and consequently its replacement has to be more frequent.

To illustrate some of the advantages of PGTs in regard to ordinary trains, Table 6.3 is given, showing that the mass of a PGT can be even about 15 times less for the same power (740 kW) and the same transmission ratio ($i = 8$).

Table 6.3 Comparison of ordinary and planetary reducers

Type of reducer	Mass (kg)	Oil flow (dm^3/min)	Efficiency (η)
Ordinary; herringbone hardened teeth; sliding bearings	1400	95	94.5
Ordinary; herringbone nitrided teeth; sliding bearings	560	95	94.5
Planetary; herringbone nitrided teeth; sliding bearings	370	65	96.3
Planetary; special design; nitrided teeth; rolling bearings	87	20	97.7

U.S. Well - Exhibit 2012
Liberty v. U.S. Well - IPR2025-00066
Page 25 of 52

6.1.4 *Mating Conditions*

In order to obtain proper operation of the PGT, it is necessary to fulfil three conditions of mating: condition of coaxiality, condition of neighbouring and condition of assembly.

6.1.4.1 Condition of Coaxiality

This condition makes demand upon the axes of all main members to lie strongly in the same straight line. Only then can the axes of the planets be mutually parallel, that is parallel to the main axis and at the same distance from it. From the design's point of view, that will be achieved when the centre distances between planets and their central gears are equal (Figure 6.13). Thus:

$$|a_{1-2}| = |a_{2'-3}| \tag{6.14}$$

This condition can be noted in the form:

$$|d_{w1} + d_{w2}| = |d_{w2'} + d_{w3}|. \tag{6.15}$$

For Null and V-null toothing, this condition converts to the number of teeth condition:

$$|z_1 + z_2| = |z_{2'} + z_3|. \tag{6.16}$$

6.1.4.2 Condition of Neighbouring

Planetary gear trains are commonly put with three or more (pairs of) planets, primarily due to the balancing of revolving masses. It is a rule that the number of planets increases as the transmission ratio reduces. So, three (pairs of) planets are put for transmission ratio $i > 4$ and a greater number for $i \leq 3$.

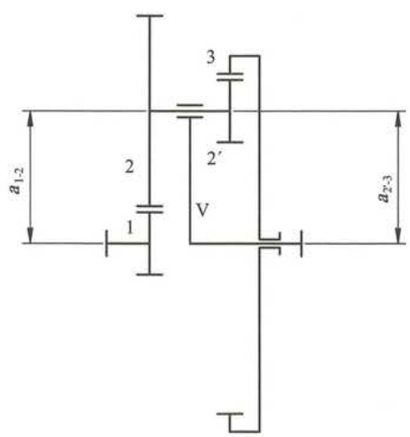

Figure 6.13 Condition of coaxiality

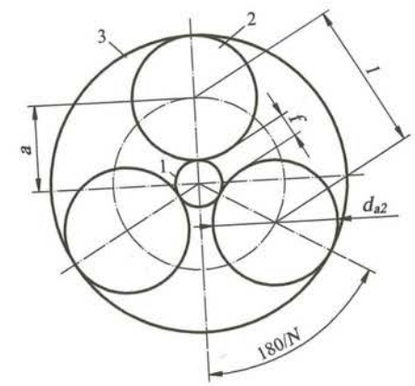

Figure 6.14 Condition of neighbouring

To place the planets around the central gear, the distance f between their tip circles must exist. To achieve this, the distances l between the axes of planets should be greater than their tip circle diameters d_{a2} (Figure 6.14).

Thus:

$$l > d_{a2} \quad \text{i.e.} \quad l = d_{a2} + f, \tag{6.17}$$

where:

$$l = 2a \sin \frac{\pi}{N} \tag{6.18}$$

where N is the number of planets.

The distance between planets is commonly taken as $f \geq 2$ mm.

6.1.4.3 Assembly Condition

Planets cannot accomplish their duty if they are not in correct mesh with the central gear. This means that the teeth of all planets must enter the mesh with the central gear teeth at the same time in order to avoid any tooth penetrating a tooth of the mating gear. For a simple PGT 1AI, pursuant to Figure 6.15, it means that the planet teeth must enter the spaces of both sun and annulus gear, just as shown in the figure. To achieve that, the following condition must be fulfilled:

$$\frac{z_1 - z_3}{N} = k, \tag{6.19}$$

where N is the number of planets and k is the whole number.

For any other simple PGT, as shown in Figures 3–8, the assembly condition is fulfilled if:

$$\frac{z_1 \cdot z_{2'} - z_2 \cdot z_3}{p \cdot N} = k \tag{6.20}$$

U.S. Well - Exhibit 2012
Liberty v. U.S. Well - IPR2025-00066
Page 26 of 52

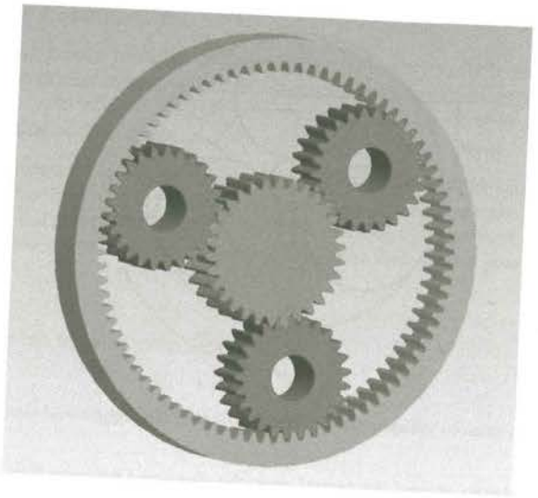

Figure 6.15 Example of correct assembly (See Plate 3)

where N and k are same as in Equation (6.19), and p is the greatest common divisor of numbers z_2 and $z_{2'}$.

6.1.5 *Diagrams of Peripheral and Rotational Speeds*

Kinematics of PGTs can be determined graphically by means of diagrams of peripheral and rotational speeds. Those diagrams are to be drawn by the scheme of PGT, in its upper half. Beside the values of peripheral and rotational speeds, they offer a clear account of the main members' directions of rotation and their relations, as demonstrated in Figure 6.16 for the 1AI train. Horizontally, at the height where they appear in the train scheme, the peripheral

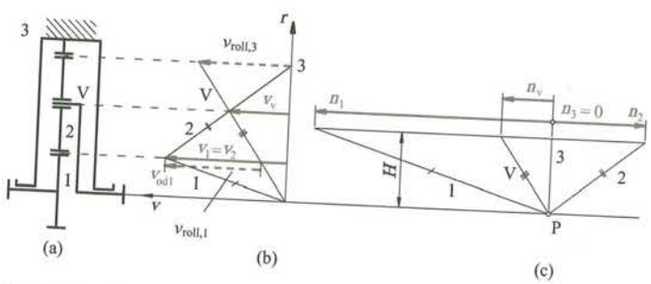

Figure 6.16 Graphical determination of the peripheral and rotational speeds: (a) scheme of train, (b) peripheral speed diagram, (c) rotational speed diagram

speeds are drawn-in in the chosen scale M_v, and at the rotational speed axis, which is drawn at an arbitrary distance H from the kinematic pole P (placed at the main axis of the train), the speeds of rotation are obtained in the scale M_n. Thus, the PGT scheme has to be drawn in the length scale M_d. If all scales are respected, the correct values of all rotational speeds can be read from the diagram. The scales are defined in the following way:

- Peripheral speed scale; 1 cm in diagram represents the speed of A m/s:

$$M_v = A \cdot \frac{\text{m/s}}{\text{cm}} \tag{6.21}$$

- Length scale; 1 cm in diagram represents the length of B cm:

$$M_d = B \cdot \frac{\text{m}}{\text{cm}} \tag{6.22}$$

- Rotational speed scale; 1 cm in diagram represents the rotational speed of M_n s^{-1}:

$$M_n = \frac{1}{2\pi} \cdot \frac{M_v}{M_d} \cdot \frac{1}{H} \left[\frac{\text{s}^{-1}}{\text{cm}}\right]. \tag{6.23}$$

Rules for drawing and analysing these diagrams are as follows:

- Peripheral speed diagram is drawn for the upper half of the train only.
- Tips of peripheral speed vectors are joined with a single straight line: first the vector of the known peripheral speed is drawn; its tip is to be joined with the tip of some other peripheral speed vector, commonly the null vector of a fixed member.
- Each member (central gear, planet, carrier) is represented with one characteristic line (1, 2, V) passing the tip of its peripheral speed vector and the origin of the diagram or the tip of some other member peripheral speed vector. The height of the central gear characteristic line equals the half of the central gear diameter, whereas for planets it is the whole diameter.
- In the rotational speeds diagram, the characteristic line of each member is parallel to that in the peripheral speed diagram and passes through the kinematic pole P.
- If the characteristic lines are sloped to different sides (one right-handed, the other left-handed), it means those members rotate in opposite directions (one clockwise, the other counterclockwise).
- The tangent of the characteristic line angle is the rotational speed of the member.
- The fixed member characteristic line is a vertical straight line.
- Characteristic lines of members are mutually joined in triangles.
- Rotational speed diagram can generally be drawn in arbitrary position, but commonly at distance H over the main axis.
- Rotational speeds are read from both the left and right sides of their scale origin defined by an intersection point of the scale and ordinate axis.

As an example, the speed diagrams of a two-step planetary reducer (1AI + 1AI) (Figure 6.17) is drawn for the known dimensions and rotational speed n_1 of a driving

U.S. Well - Exhibit 2012
Liberty v. U.S. Well - IPR2025-00066
Page 27 of 52

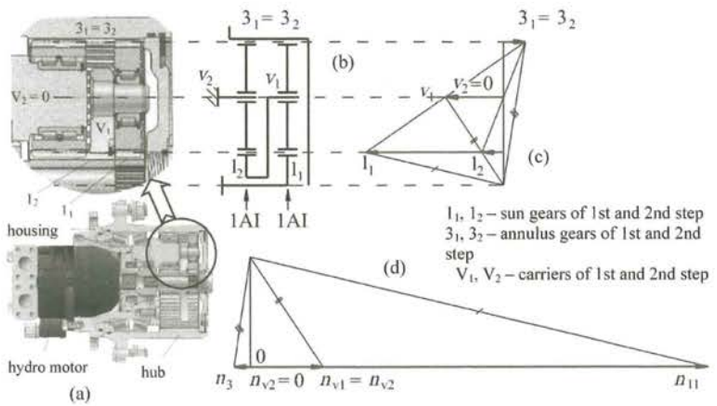

Figure 6.17 Speed diagrams for the PGT of a dredger wheel: (a) axial section, (b) scheme, (c) peripheral speed diagram, (d) rotational speed diagram (See Plate 4)

hydraulic motor. The reducer, together with the motor, is placed in the hub of a dredger wheel. The second step carrier V_2 is joined to the housing, thus fixed, and the motor is joined to the chassis of a dredger. The revolving annulus gear of both steps, $3_1 \equiv 3_2$, is made in one piece together with the hub of the wheel, which is bedded to the housing. The first step sun gear 1_1 receives the motion from the motor and transmits it to both the annulus gear and the first step carrier V_1 joined with sun gear 1_2 of the second step. The motion of sun gear 1_2 is transmitted to the annulus gear through planets at the fixed carrier V_2. So, the annulus gear receives the motion from both sets of planets and transmits it to the wheel hub. This layout is interesting because all gears (of both steps) have the same geometry of teeth.

It is not easy to draw the speed diagrams, because only the rotational speed n_1 of the motor is known. From obvious relations ($n_{31} = n_{32}$ and $n_{v1} = n_{12}$) the rest can be drawn individually. To draw the diagram in one attempt, it is necessary to calculate the peripheral speed of the wheel v_3 from its speed of rotation n_3. If n_3 is not known, the arbitrary value should be taken and from the tip of its vector a straight line is drawn to the tip of the carrier V_2 peripheral speed vector which equals zero. The tip of the peripheral speed vector of sun gear 1_2 is the intersection point of that straight line and the horizontal line defined with the pitch circles of sun gears 1_2 and 1_1. That point should be joined with the origin of the diagram by a straight line in which, at the level of the planet axis, lies the tip of peripheral speed vector of the carrier V_1. When the tips of peripheral speeds of annulus gear 3_1 and the carrier V_1 are joined, on the same straight line, at the level of sun gear 1_1 lies the tip of its peripheral speed vector. The shortcoming of this method is that peripheral speeds are not drawn to the proper scale, so the diagram can be drawn once again. Characteristic lines of each member, marked with one, two or three short cross lines, have to be transferred into the rotational speeds diagram. From the ratio of lengths n_1 and n_3, the value of transmission ratio can be estimated (approximately 30). It can be observed that the directions of rotation of the wheels (i.e. the annulus gear) are opposite to the directions of rotation of all other members.

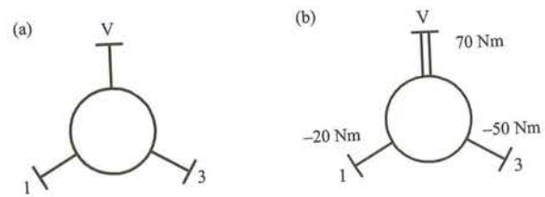

Figure 6.18 Wolf symbols for simple planetary gear trains: (a) base symbol, (b) symbol with marks of sum shaft and values of torques

6.1.6 *Wolf Symbolic*

The Wolf symbolic serves the purpose of a simpler and more easily acceptable demonstration of the main characteristics of a PGT. It consists of a circle which represents the train and three radial lines which represent the shafts of the main members (Figure 6.18a). At the end of each of these lines, a short cross line is drawn representing the flange. One of these cross lines can be hatched, meaning the shaft is fixed. At the ends of symbolic shafts their marks are enrolled and the values of their torques can also be enrolled. The sum of these torques must be zero (see Section 6.1.6). It means that one of these torques is the sum of the other two. Its shaft is termed the sum shaft and is marked with two radial lines (Figure 6.18b). By shaft marks, other necessary data can also be enroled, for example power, moments of inertia and so on.

6.1.7 *Forces, Torques and Power of Planetary Gear Trains*

6.1.7.1 Peripheral Forces and Torques

Since only the main members are able to communicate with the environment, only they can transfer loads, that is forces and torques. Therefore, in PGT calculations only the active forces which load the main members should be taken into account. They are peripheral, radial and rarely (in helical gears) axial forces.

All expressions for the calculation of these forces, like the rules for determining their directions, are the same as for ordinary gear drives; thus attention shall be paid to the peripheral forces and torques transmitted by them. Thus, it is important to mention that radial forces are as important as the ones which deform the rims of annulus gears, although their vector sum equals zero.

The loads by peripheral forces and torques of two simple PGTs will now be examined and the conclusions obtained will be valid for any PGT. The trains with active peripheral forces are presented in Figures 6.19 and 6.20. It can be observed that, regardless of which shaft is driven or driving, the peripheral forces are always same – by size and by direction!

From the condition of equilibrium of the forces acting on the carrier, it follows that *the peripheral force driving the carrier is always equal to the sum of the active peripheral forces acting on the carrier, by an opposite sign.*

So, for a planet carrier this is valid:

$$F_{t1} + F_{t3} + F_{tv} = 0 \tag{6.24}$$

U.S. Well - Exhibit 2012
Liberty v. U.S. Well - IPR2025-00066
Page 28 of 52

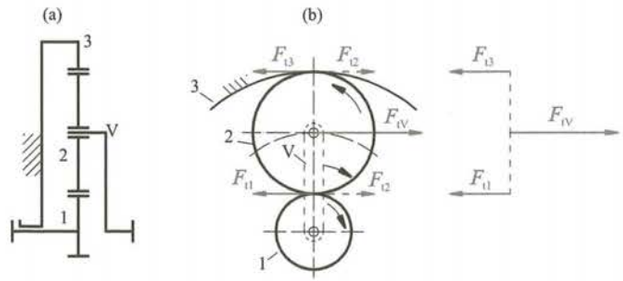

Figure 6.19 Peripheral forces of PGT 1AI: (a) scheme of train, (b) active peripheral forces

Since every peripheral force at its arm creates torque, from the condition of equilibrium of torques, the next important equation for the calculation of PGTs is noted:

$$T_1 + T_3 + T_v = 0 \tag{6.25}$$

From this equation, it is clear that the torque of one member must have a sign opposite to that of the other two members. It means that this member (in both cases it is a carrier) is most loaded, because it transmits a torque equal to the torque sum of the other two members. That member is termed the *sum member*, and its shaft as the *sum shaft*. It is observed that the sum member is the one whose own fixing (resting) results in a negative transmission ratio, and it is always the same for a certain type of train, regardless of which member is fixed (held in rest) and which member is driving or driven. The other two members are called *difference members* and their shafts the difference shafts. Obviously, the signs of their torques are the same. If difference members are central gears, then the carrier is the sum member and consequently $u < 0$. This means that, in negative base gear ratio trains ($u < 0$), the carrier shaft is always the sum shaft. In positive base gear ratio trains ($u > 0$), the central gear shaft carrying the higher absolute torque is the sum shaft. It can be argued that for $u > 1$ the central gear 3 shaft is the sum shaft, and for $0 < u < 1$ it is that of central gear 1. It can also be argued that the sum shaft is that whose speed lies between the speeds of the different shafts.

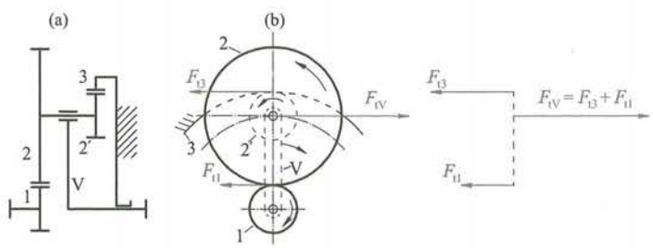

Figure 6.20 Peripheral forces of planetary gear trains 2AI: (a) scheme of train, (b) active peripheral forces

The torque of the driving member always has the same sign as the rotational speed, and the torque of the driven member always has the opposite sign.

6.1.7.2 Power and Efficiency

The power of central gear 1 is determined by the known expression $P_1 = T_1 \cdot \omega_1$. If the right part of this equation is added and subtracted for the member $T_1 \cdot \omega_v$, this equation is obtained:

$$P_1 = T_1(\omega_1 - \omega_v) + T_1 \cdot \omega_v \tag{6.26}$$

from which it is clear that the entire power P_1 can be divided into two parts: the power $T_1(\omega_1 - \omega_v) = P_{roll,1}$ which is transmitted to planets by rolling, and the power $T_1 \cdot \omega_v = P_{c1}$ which is transmitted to the carrier directly, without power losses, as with the coupling. So:

$$P_1 = P_{roll,1} + P_{c1} \tag{6.27}$$

In the same way, the power of central gear 3 is divided into two partial powers:

$$P_3 = T_3(\omega_3 - \omega_v) + T_3 \cdot \omega_v = P_{roll3} + P_{c3}. \tag{6.28}$$

The power transmitted by a carrier:

$$P_v = T_v \cdot \omega_v \tag{6.29}$$

is unique and it cannot be divided into parts.

If power losses are neglected (thereafter they will be accounted for), then the sum of powers transmitted by all main members, according to the law of energy preservation, must equal zero:

$$P_1 + P_3 + P_v = T_1 \cdot \omega_1 + T_3 \cdot \omega_3 + T_v \cdot \omega_v = 0. \tag{6.30}$$

It is derived that the following is valid as well:

$$T_1(\omega_1 - \omega_i) + T_3(\omega_3 - \omega_i) + T_v(\omega_v - \omega_i) = 0 \tag{6.31}$$

where $i = 1$, 3 or v. For example, for $i = 1$, this is obtained:

$$\frac{T_3}{T_v} = -\frac{(\omega_v - \omega_1)}{(\omega_3 - \omega_1)}. \tag{6.32}$$

In all expressions dealing with power, the power is defined positive if the torque of the member has the same direction as the speed of rotation, and negative if the torque has the opposite direction than the speed of rotation. So, in distinction to torques, the power of a driving member(s) is always positive, the power of a driven member(s) is always negative and the power of a fixed member is zero.

The torque of a member can be easily determined from Equations (6.25), (6.30) and (6.4) if the torque of any other member and the base gear ratio u are given.

Determining the *power efficiency* (of mesh) of a PGT is a complex problem which can be solved in two ways: (i) from previously derived expressions for torques and powers and

U.S. Well - Exhibit 2012
Liberty v. U.S. Well - IPR2025-00066
Page 29 of 52

(ii) on the basis of the fact that PGT power loss (in mesh) equals the power loss (in mesh) of the base PGT if the relative speeds of driving members of the real and base train are equal. Obviously, in both ways, the efficiency η_P should be determined for the given base efficiency η_z (of the PGT with a fixed carrier). The known expression for the base efficiency (by $P_v = 0$) can be determined from Equation (6.30):

$$\eta_z = \frac{-P_3}{P_1} = -\frac{T_3\omega_3}{T_1\omega_1} = \frac{1}{u}\left(-\frac{T_3}{T_1}\right). \tag{6.33}$$

In this equation, the minus (negative) sign in front of the power P_3 is introduced, because P_3 is negative itself, and η_z must be positive.

Equations (6.33) and (6.25) are sufficient for determining the torque ratio i_T and η_P pursuant to the former (i) way. As an example, the efficiency will be obtained of a simple train with fixed central gear 1 with the carrier as a driving member and the annulus gear as a driven member (types B and C from Table 6.2). For those trains, from Equation (6.33) it follows that:

$$u \cdot \eta_z = -\frac{T_3}{T_1} = -\frac{T_3}{T_v}\frac{T_v}{T_1} = \left(-\frac{T_3}{T_v}\right)\left(-1 - \frac{T_3}{T_1}\right) = \frac{T_3}{T_v}\left(1 + \frac{T_3}{T_1}\right) \tag{6.34}$$

Substituting herein the ratio of torques from Equations (6.33) and (6.25), it is derived:

$$-\frac{T_3}{T_v} = i_T = \frac{u \cdot \eta_z}{u \cdot \eta_z - 1} \tag{6.35}$$

Since for any PGT valids

$$\eta_P = -\frac{P_{iz}}{P_{ul}} = -\frac{T_{iz} \cdot \omega_{iz}}{T_{ul} \cdot \omega_{ul}} = \left(-\frac{T_{iz}}{T_{ul}}\right)/i = i_T/i \tag{6.36}$$

that is the efficiency η_P of the PGT is equal to the ratio of the torque ratio i_T and the transmission ratio i, then the efficiency of the observed train is obtained by substituting Equation (6.35) for the torque ratio and Equation (6.9) for the transmission ratio in Equation (6.36). This finally derives:

$$\eta_P = \frac{u - 1}{u - 1/\eta_z}. \tag{6.37}$$

According to the latter way, (ii), the general expressions can be derived for PGTs power efficiency in cases when central gear is the driving member and the carrier driven, and opposite.

If one of central gears is the driving member, pursuant to the rule that the power loss in mesh is equal to the power loss P_z of the base PGT, by equal values of relative rotational speeds n_{in} of the PGT and $(n_{in} - n_v)$ of the base PGT driving member, it follows that:

$$\eta_P = \frac{P_{out}}{P_{in}} = \frac{P_{in} - P_z}{P_{in}} = \frac{T_{in}\omega_{in} - P_z}{T_{in}\omega_{in}} = 1 - \frac{P_z}{T_{in}\omega_{in}} \tag{6.38}$$

$$P_z = P_{in} - P_{out} = (1 - \eta_z)T_{in}(\omega_{in} - \omega_v) \tag{6.39}$$

where the input values of powers P and torques T are marked with the subscript 'in' and the output ones with the subscript 'out'. From these two expressions, the general equation is

derived for power efficiency of PGTs having one of the central gears as the driving member:

$$\eta_P = 1 - (1 - \eta_z)\left(1 - \frac{\omega_v}{\omega_{in}}\right) = 1 - (1 - \eta_z)\left(1 - \frac{1}{i}\right). \tag{6.40}$$

If the carrier is a driving member, and the central gear driven, this is valid:

$$P_z = P_{in} - P_{out} = \frac{P_{out}}{\eta_z} - P_{out} = P_{out}\frac{1 - \eta_z}{\eta_z} = \frac{1 - \eta_z}{\eta_z}T_{out}(\omega_{out} - \omega_v) \tag{6.41}$$

$$\eta_P = \frac{P_{out}}{P_{ul}} = \frac{P_{out}}{P_{out} + P_z} = \frac{T_{out}\omega_{out}}{T_{out}\omega_{out} + T_{out}\frac{1-\eta_z}{\eta_z}(\omega_{out} - \omega_v)} = \frac{1}{1 + \frac{1-\eta_z}{\eta_z}(1 - i)}. \tag{6.42}$$

In the described way, the efficiencies and torque ratios of all PGTs can be determined. For simple PGTs the expressions obtained are presented in Table 6.2.

If power losses P_B due to friction in bearings, sealing P_S and in idle motion P_{Z0} are taken into account, then Equation (6.30) converts to:

$$P_1 + P_3 + P_v + P_z + P_L = T_1 \cdot \omega_1 + T_3 \cdot \omega_3 + T_v \cdot \omega_v + P_L = 0 \tag{6.43}$$

where P_L is a power of rest losses:

$$P_L = P_B + P_S + P_{Z0}. \tag{6.44}$$

The power of rest losses, like any other power of resistance, is always negative. Each of these losses is calculated in the same way as (ordinary) gear drives with immovable axes (see Section 4.3.1).

For a fixed central gear, it is easy now to calculate the total PGT power efficiency from Equation (6.43), for example for the fixed central gear 1 and the carrier as a driving member, this is obtained:

$$\eta_{pt} = -\frac{P_3}{P_v} = 1 - \frac{|P_z + P_L|}{P_v} \tag{6.45}$$

where power loss in mesh is obtained by η_P calculated as demonstrated above or taken from Table 6.2:

$$P_z = P_v(\eta_p - 1). \tag{6.46}$$

A much faster, but somewhat less accurate way for determining the total efficiency of a PGT is by multiplication of all partial efficiencies:

$$\eta_{pt} = \eta_P \cdot \eta_B \cdot \eta_S \cdot \eta_{Z0} \tag{6.47}$$

where the bearing efficiency is within the range $\eta_B = 0.82 \ldots 0.995$ (for rolling bearings), the seals efficiency is $\eta_S = 0.99 \ldots 0.995$ and the idle motion efficiency is $\eta_{Z0} = 0.99 \ldots 0.995$.

U.S. Well - Exhibit 2012
Liberty v. U.S. Well - IPR2025-00066
Page 30 of 52

6.1.7.3 Branching of Power

It has already been demonstrated that the power transmitted by central gears consists of the rolling power P_{roll} transmitted by power loss and the coupling power P_c transmitted without power loss. It is important therefore to make the coupling power as high as possible.

It is possible to achieve all power to transmit as the coupling; see Figure 6.21a where a PGT is shown in which the rotation of planets is prevented by fixing their shafts to the carrier. In such a way, the planets, the carrier and, if the sun gear 1 is the driving one, the annulus gear 3, rotate around main axis as an entirety with the rotational speed equal to that of the driving sun gear. Thus, there is no rolling ($n_1 = n_v$) – the power is transmitted by a gear coupling 1–2 with efficiency slightly close to unity. There are only power losses in bearings, seals and of idle motion. This is the limit PGT with no rolling, but with transmission ratio equal unity.

The other limit PGT is shown in Figure 6.21b: the carrier is fixed herein, thus the base PGT is obtained where the power is transmitted by rolling only. The coupling power is zero, because the rotational speed of the carrier is zero.

Real PGTs have neither fixed planets nor the carrier. Thus, there are both rolling and coupling power. If both of these are positive (then they are also by absolute value less than total power), the true division of power appears, on rolling P_{roll} and coupling P_c. If one of the powers P_{roll} or P_c is higher than the power of the central gear giving them the power, then the other power, P_c or P_{roll}, must be negative to fulfil the condition of Equation (6.27). In that case, one of the members receives a power higher than the input power! For example, if $P_{roll,1} > P_1$, the surplus of power $P_{roll,1} - P_1$ is called the *reactive power*, which circulates inside the train and does not appear at the output. Unfortunately, the reactive power in its circulation additionally loads the parts through which it passes, thus they (central gear 1 and its shaft and bearings) must be dimensioned for the whole power $P_{roll,1}$, that is for the corresponding torque. If $P_{c,1} > P_1$, the carrier and its shaft and bearings must be dimensioned for the whole power $P_{c,1}$. It is also clear that, if one of the component powers, P_{roll} or P_c, is higher than the power of the central gear, the other must has a negative sign – that is the reactive power.

It can be argued that in a negative base gear ratio the rolling power is always smaller than the power being transmitted, while in a positive gear ratio the rolling power can be smaller, larger or equal to the power being transmitted, depending on the power flow mode.

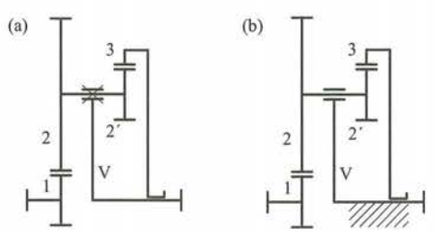

Figure 6.21 Limit PGTs: (a) fixed planets, (b) fixed carrier

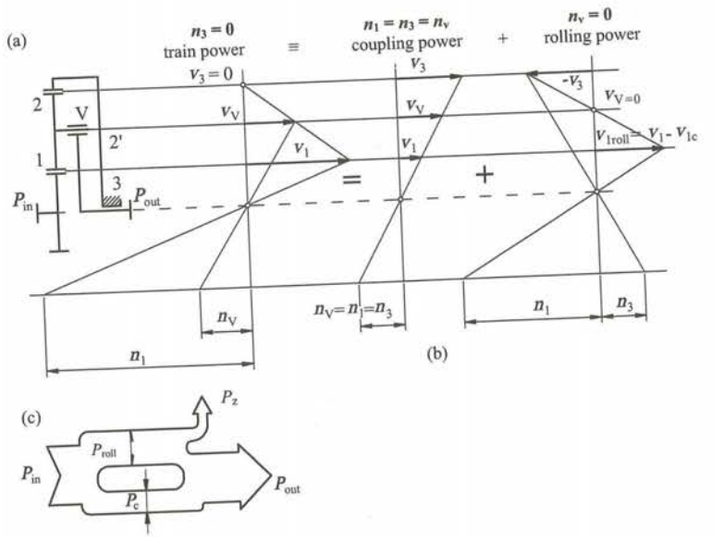

Figure 6.22 True power division on coupling power and rolling power: (a) scheme of train, (b) speed diagram, (c) power flaw

The values of rolling and coupling powers are calculated pursuant to Equations (6.27) and (6.26) and their relative values, for fixed central gear 3:

$$\frac{P_{roll,1}}{P_1 \cdot \pi/30} = n_1 - n_v \qquad \frac{P_{c1}}{P_1 \cdot \pi/30} = n_v \tag{6.48}$$

can also be easily determined graphically, thus they can be clearly seen and so the way to increase the latter one can be found.

It is interesting, but also clear from Equations (6.26) and (6.40), that peripheral speeds, rotational speeds and thus rolling and coupling powers can be determined both analytically and graphically (Figure 6.16), by summing powers, or speeds of the two limit PGTs (Figure 6.21).

The train is presented in Figure 6.22 with a true division of the powers, the train with $P_c > P_{in}$ in Figure 6.23 and the train with $P_{roll} > P_{in}$ in Figure 6.24. It is seen that peripheral speeds, thus powers, are obtained as the sum of peripheral speeds and powers of two limit trains, which are easily drawn. To each figure is added a diagram of the power flaw.

It can be seen that in a PGT with true power division there is no reactive flaw of power, while in others, the surplus of rolling ($P_{roll} - P_1$) or coupling ($P_c - P_1$) power returns to its member by a reactive flaw.

6.1.7.4 Self-Locking

When the flaw of power in some mechanical drives is inverted, thus the driving shaft becomes driven and the driven becomes driving (inverted drive; Figure 6.25), it is possible

U.S. Well - Exhibit 2012
Liberty v. U.S. Well - IPR2025-00066
Page 31 of 52

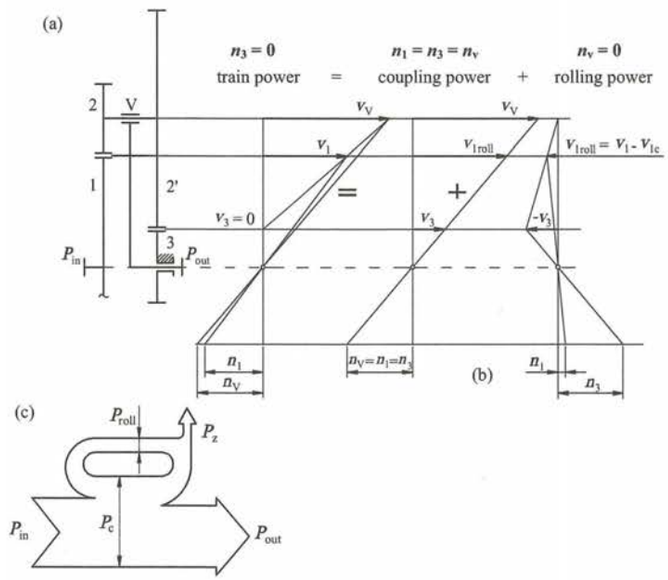

Figure 6.23 Coupling power higher than input power: (a) scheme of train, (b) speed diagram, (c) power flaw

that such a drive cannot be moved. Regardless of how great a power or torque is carried in, the power losses or the corresponding moment of friction are always greater, that is the efficiency is less than or equals zero. Such drives are self-locking. Hence, a mechanical drive is self-locking when the shaft B is a driving shaft (Figure 6.25) carrying the arbitrary high torque which in the train of power transmission causes power losses greater than the input power on that shaft (B). It means that the self-locking factor s, being defined as a ratio of power losses and input power in the inverted drive, must be greater than unity in the inverted drive. The value of the self-locking factor must be greater than unity to achieve self-locking. For a PGT, similar to any other mechanical drive, it can be obtained when power equation (6.43) is divided with input power P_B:

$$s = -\frac{P_z + P_L}{P_B} = 1 + \frac{P_A}{P_B} = 1 - \eta_{BA} > 1. \tag{6.49}$$

The self-locking factor is characteristic for the very train and does not depend on the powers or torques carried out, but on their ratios, that is on the efficiency and transmission ratio.

When Equation (6.43) is applied on drive A → B followed by division with P_A, the efficiency of drive A → B is obtained:

$$\eta_{AB} = 1 + \frac{P_z + P_L}{P_A} \tag{6.50}$$

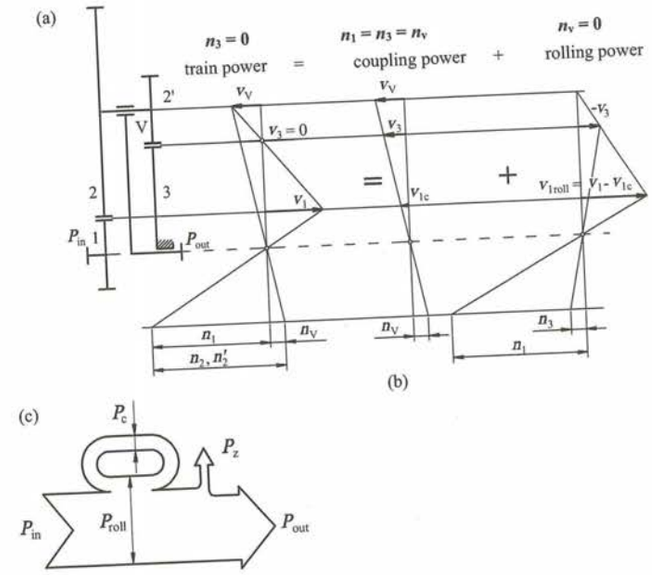

Figure 6.24 Rolling power higher than input power: (a) scheme of train, (b) speed diagram, (c) power flaw

It is proved that efficiencies of an arbitrary PGT η_{AB} and its inverted train η_{BA} are related by the following expression:

$$\eta_{AB} = \frac{1}{1+s} \approx \frac{1}{2 - \eta_{BA}}. \tag{6.51}$$

It is clear now that the efficiency of the PGT must be less than 0.5 to achieve the self-locking train! Consequently, self-locking PGTs have a low efficiency and the designer has to resolve upon its convenience on the basis of the type and purpose of the driven machine. So, for example, if the expression for efficiencies of any PGT with a negative base gear ratio (opposite directions of rotation of the driving and driven central gear) is substituted in

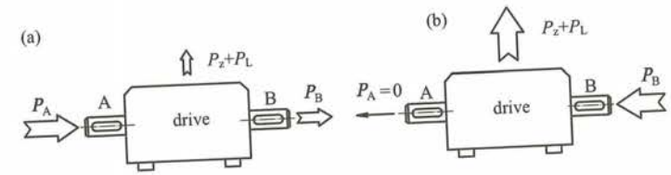

Figure 6.25 Schematical illustration of power flaw in self-locking drive: (a) for drive A → B, (b) for drive B → A

Equation (6.51), it is understood that it is impossible to fulfil the condition $s > 1$, which means that such PGTs cannot be self-locking! Thus, self-locking PGTs must have a positive base gear ratio! One more self-locking condition can be argued as weel: $\eta_z < u < 1/\eta_z$

6.2 Special Layouts of Simple Planetary Gear Trains

6.2.1 Bevel Differential Trains

The application of bevel PGTs is rare due to difficulties in assembly and problems in balancing the planets. They are most frequently used as differential trains in automotive vehicles. A simplified section of the basic design of such a train is illustrated in Figure 6.26 where the differential train receives motion from the pair of cylindrical gears moved by a motor shaft over the gear box. The wheel cylindrical gear is stiffly connected with the housing of the differential which at the same time is the carrier, in which two equal planets 2 and 2′ are bedded, both mated with two equal central gears 1 and 3 driving the vehicle wheels.

In these trains, the kinematics are identical to those of PGTs with cylindrical gears. The same is valid for torques, powers and efficiencies. Thus, a common bevel gear differential train (Figure 6.26) is equivalent to simple planetary (differential) trains with cylindrical gears (Figures 6.3–6.6), of course if their planets are identical, same as central gears.

However, the efficiency of the bevel gear differential is somewhat less than that of a cylindrical gear, but only because the efficiency of its base trains is lower.

In automobile differentials, the most frequent is the layout with a bevel gear pair receiving motion from the gear box instead of the cylindrical gear (Figure 6.27). The PGT remains the same as in Figure 6.26. The section of such a differential train is presented in Figure 6.28, together with diagrams of the rotational speeds.

Since central gears 1 and 3 have an equal number of teeth, as well as planets 2 and 2′, the kinematics is quite simple. As the Willis rule is valid for any two gears of PGT, this is obtained:

$$\frac{n_1 - n_v}{n_3 - n_v} = -\frac{z_3}{z_1} = -1 \tag{6.52}$$

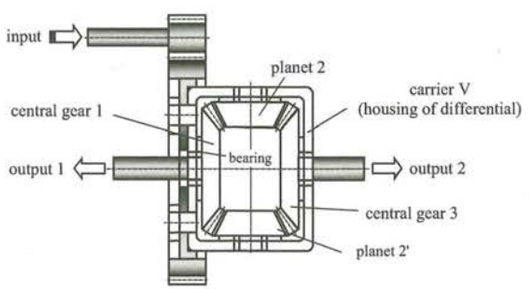

Figure 6.26 Simplified section of a bevel differential train (See Plate 5)

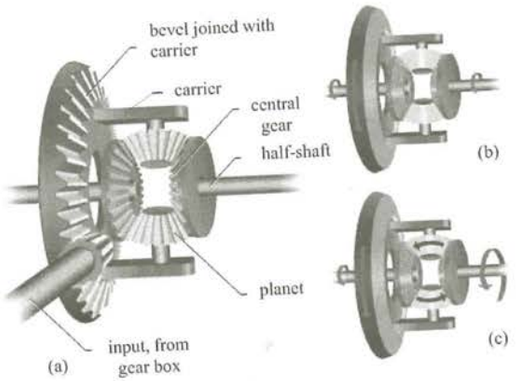

Figure 6.27 Planetary bevel train: (a) 3-D model, (b) straight ride, (c) ride in turn of road (See Plate 6)

where an expression is derived relating to the rotational speeds of the three main members of the differential:

$$n_v = \frac{n_1 + n_3}{2}. \tag{6.53}$$

It means that the carrier rotational speed n_v is the mean of central gears rotational speeds n_1 and n_3. Thus, when riding the vehicle on a turn in the road, the outer vehicle wheel has to pass over a longer distance than the inner one at the same time. So, its rotational speed (also, the rotational speed of its driving central gear) becomes higher than the speed of the carrier, just as the rotational speed of the other wheel (central gear) becomes lower than of the carrier, Figure 6.28b. Thus, the differential compensates for the difference of wheel rotational

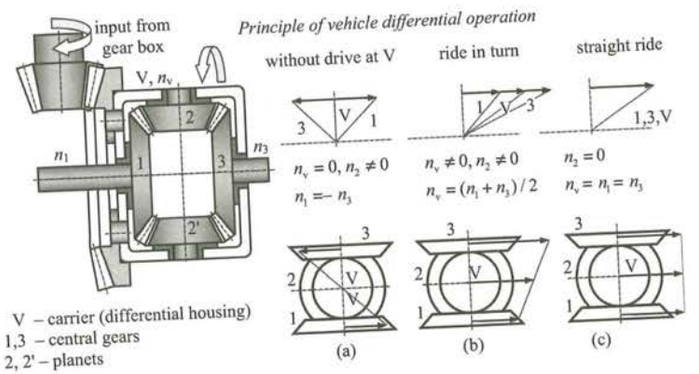

Figure 6.28 Bevel differential train: (a) with fixed carrier, (b) different rotational speeds of wheels at ride in turn, (c) straight ride – same rotational speed (and power) for both wheels (See Plate 7)

U.S. Well - Exhibit 2012
Liberty v. U.S. Well - IPR2025-00066
Page 33 of 52

speeds. In this way, planets rotate around their own axes in opposite directions with rotational speeds:

$$n_2 = \frac{z_1}{z_2}(n_1 - n_v) \quad n_{2'} = \frac{z_1}{z_2}(n_v - n_3). \tag{6.54}$$

In a straight ride, Figure 6.28c, obviously $n_1 = n_3$ and, pursuant to equation (6.53) $n_v = n_1 = n_3$, which means that the carrier together with the central gears and planets, all mutually immovable (planets at rest), rotate at the same rotational speed n_v, just like the wheels of the vehicle.

If there is no input from the gear box, the carrier is fixed, thus the differential operates as an ordinary drive: by revolving one central gear, the other rotates in the opposite direction with the same rotational speed (Figure 6.28a).

6.2.2 *Planetary Gear Trains with Single Gear Pair*

When $z_3 = z_{2'}$ is taken for PGT 2II with braked central gear 1, then the rotational speed of planet 2′ will be equal to rotational speed central gear 3, that is they will rotate together, but each around its own axis. This means that the gear pair (z_3, $z_{2'}$) does not participate in the process of alternating the rotational speed, thus that gear pair is not needed! It is necessary only to transfer the rotational motion of planet 2 shaft to the main axis, that is to the output shaft. This is achieved by:

a. A corresponding coupling which can be a double homo-kinetic or double Cardan joint (Figure 6.29),
b. A 'floating coupling' obtained by a certain number of pins which are fixed in planet 2 and enter the holes of sufficiently large diameter, uniformly distributed over the circumference of the disc joined with the output shaft coaxial to the main axis (Figure 6.30),
c. Same as previous, but pins are fixed on the disc and 'float' in the enlarged holes on the body of the planet and in that way drive the output shaft. In such drives, when the planet involute

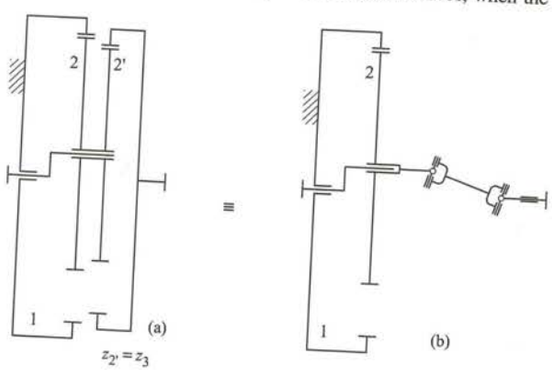

Figure 6.29 Scheme of PGT with single gear pair designed with Cardan drive: (a) original train, (b) derived drive

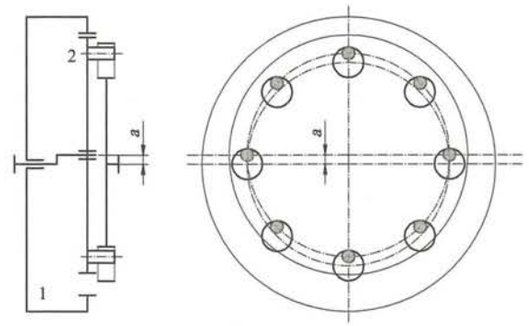

Figure 6.30 Scheme of PGT with single gear pair designed with floating coupling

toothing is replaced with a cycloid one and the annulus gear teeth with z_1 pins uniformly distributed over the pitch circle – the so-called *cycloid drive* is obtained, which is very widely applied and has better features (efficiency more than 95% by high transmission ratio) than the involute one. Its shortcomings are difficulties in working the cycloid toothing and in assembly. In common design of the cycloid drive there are two equal planets mated with equal fixed annulus gears in two different planes and pins joined to the output shaft disc float in the holes of the planets. The planets are turned at 180° to each other, thus the shared carrier is similar to the crank-shaft of a two-cylinder engine.

In all cases described, the planetary motion can be transmitted with a total of only two gears. For all drives, the transmission ratio is:

$$i_{v3} = \frac{u}{u-1} = \frac{\frac{z_2}{z_1}}{1 - \frac{z_2}{z_1}} = \frac{z_2}{z_2 - z_1} \tag{6.55}$$

which means that its level can be adapted by changing the number of teeth (pins) z_2 and by changing the difference $(z_2 - z_1)$, which ranges up to $(z_2 - z_1) = 1$. In that case, the transmission ratio is $i_{v3} = -z_2$, which means that the direction of output shaft rotation is opposite to the input one, and the transmission ratio is equal to the number of teeth of the planet, thus it is arbitrary within bounds! In addition, the efficiency is excellent and manufacturing is simple. However, this drive has some shortcomings: (i) it cannot be applied for low transmission ratios, because it becomes difficult to harmonize the number of teeth, that is the value of eccentricity (centre distance) a, the number of pins, their diameters and the hole diameters, (ii) instability of the oil film between mated flanks, which is easily broken in reversing or braking the motor, with a consequently somewhat inaccurate transfer of motion and (iii) for involute teeth, interferences in the mesh and undercuts in working which appear at low values of differences in the number of teeth $(z_2 - z_1)$.

6.2.3 *Harmonic Drive*

The problem of transferring the rotary motion from the highly reduced rotational speed of planets to the main axis in a so-called harmonic drive is solved in such a way that the planet

U.S. Well - Exhibit 2012
Liberty v. U.S. Well - IPR2025-00066
Page 34 of 52

and mean axes correspond! Thus, the driving gear just 'acts' as the planet. This is achieved so that the planet in the form of a thin, flexible external gear rim having one, two or four teeth less than the mating stiff annulus gear is deformed to enable the mesh. In this way the planet, being a driving member, although its axis coincides with the main axis, has the proper mesh with the annulus gear which then rotates with the rotational speed defined by the transmission ratio in accordance with Equation (6.4):

$$i = \frac{z_2}{z_2 - z_1} \tag{6.56}$$

where z_2 is the number of teeth in the flexible toothed rim and z_1 is the number of teeth in the annulus gear. Since it is commonly taken as $z_2 = 100 \ldots 640$, it follows that the transmission ratios of this drive are within the range $i = 50 \ldots 320$ (!), whereas commonly $(z_1 - z_2) = 2$.

The flexible rim (also termed the flex spline) is deformed by a wave (strain) generator which is shaped and driven in various ways, but usually by a mechanically driven disc of elliptical form, connected with the stiff outer (annulus) gear by means of a series of balls distributed circumferentially (Figure 6.31), or commonly by means of a deformable ball bearing. The wave generator is joined with the driving shaft and is placed inside the flexible rim and thus the wave generator, while already being assembled, deforms the elastic rim – it

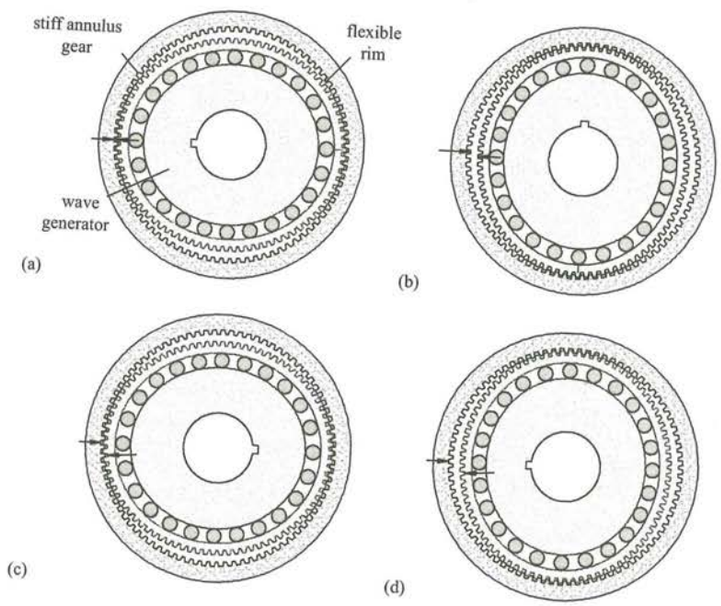

Figure 6.31 Operating principle of harmonic drive: (a) starting position, (b) generator turned through 90°, (c) generator turned through 180°, (d) full turn (360°) of generator (See Plate 8)

makes it elliptical. The flexible rim fits tightly over the wave generator so that, when the wave generator is rotated, the flexible rim deforms to the shape of a rotating ellipse but does not rotate with the wave generator. Only the strain rotates, enabling the mesh between the flexible rim and the annulus gear. As the wave generator shaft rotates, the mesh rotates as well and, as the generator turns for one revolution, the annulus gear turns for $z_1 - z_2$ backwards relative to the flexible rim (Figure 6.31). Thus, rotation of the wave generator results in a much slower rotation of the flexible rim in the opposite direction.

Advantages of the harmonic drive in regard to other PGTs are as follows:

1. High transmission ratio up to 320 can be achieved in one step; theoretically, even more.
2. Since 15–20% of the teeth are in the mesh all the time, so each single tooth is lowly loaded and thus it is possible to bear the high torque and transmit the high power regarding the size of a drive.
3. Low mass and volume.
4. High torsional stiffness.
5. High efficiency, up to 85%.
6. No backlash in the mesh, thus highly precise operating.
7. Quiet operation and less vibrations.
8. High durability due to low load.

There are also two shortcomings of this drive: (i) due to limited deformations of the flexible rim, it is not possible to achieve low transmission ratios and (ii) a high precision of working and assembly is necessary.

There are also face harmonic drives with a stiff bevel central gear having a cone half angle over 80°, mated with the planet in the form of a crown gear made of a thin, flexible disc axially bent by the wave generator in the form of a thrust ball bearing.

6.2.4 *Differential Planetary Gear Trains*

The PGT 1AI can be observed with two inputs of power (by central gears 1 and 3) and one output (by carrier V; Figure 6.32). If the shaft of central gear 3 is connected with, for example, a hydro motor which can (by a change in oil flow) continually vary in its rotational speed and direction (by changing the suction and compression sides in the sliding valve), then peripheral speed v_3 varies continually from an arbitrary negative value – as shown in Figure 6.32, over zero to the arbitrary positive value. For a given rotational speed v_1, by increasing the rotational speed v_3 (in a negative direction), the rotational speed of carrier v_v is reduced and for a certain value v_3 it changes the direction. A reverse, stepless variator is obtained – with a continual alteration in rotational speed!

The same drive, but with the carrier shaft as the driving one, can be used to keep constant the speed of rotation of the central gear 1 shaft as the output shaft. Such a drive is commonly used on ships where it is placed on the input shaft of the three-phase dynamo driven by the main ship's engine. Its purpose is to prevent fluctuations in the rotational speed caused by a variable speed of the propeller due to rough seas.

When the rotational speed of the propeller (i.e. of the engine) is increased, the rotational speed of the carrier is increased as well, thus the regulatory member 3 changes the direction of rotation. This gives a signal to the hydro motor at the input shaft of member 3 to change

U.S. Well - Exhibit 2012
Liberty v. U.S. Well - IPR2025-00066
Page 35 of 52

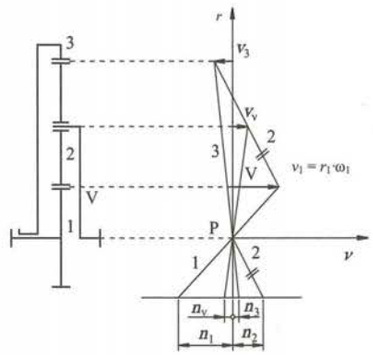

Figure 6.32 Differential PGT

the direction of rotation so that its speed is immediately returned to an earlier level, as well as the rotational speed of the output shaft. The system reacts similarly when the speed of the input member is reduced. By this method of speed control, the rotational speed of the output member remains almost constant, as the deviations total only a few percent.

An extremely important feature of differential trains can be observed from speed diagrams (e.g. Figure 6.32). The speed of any main member can be held constant while the other two vary in accordance with the base equation of simple PGTs, Equation (6.4). Using suitable electronics, this enables the designing of a variety of continuously variable transmissions by a single simple differential train.

6.2.5 *Planetary Gear Train of a Wankel Engine*

The Wankel engine is a rotational prime mover which consists of a housing presenting the stator at the same time, stiffly joined with (so fixed) central gear 1 around which planet 2 rotates with internal toothing. Its diameter d_2 is 50% larger than that (d_1) of central gear 1, that is its number of teeth is $z_2 = 1.5z_1$ (Figures 6.33 and 6.34).

Together with the rotor, the planet rotates by the rotational speed n_v around the main axis, that is around the stator axis. The apexes of the trigonous rotor body trace the epitrochoid, which is identical to the inner contour of the stator, thus they are permanently in contact with it, that is they press against it by means of a sealing batten.

Thus, the rotor and stator create three separate chambers, which, by rotation, change their volume: the largest at the end of the intake, and the smallest at the end of the compression. By combustion and expansion of the fuel mixture, rotation of the rotor and its circular motion around the central axis is achieved, which is converted into an output shaft rotary motion by means of a crank-shaft.

Because $z_2 = 1.5z_1$, according to the Willis rule, the rotational speed is three times greater than the rotational speed of the planet driven by the rotor, that is rotational piston (Figure 6.34).

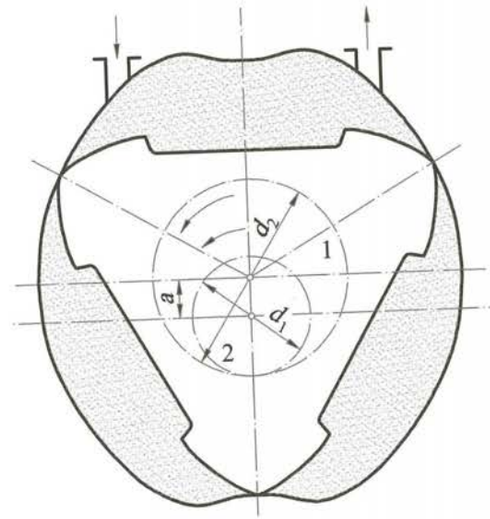

Figure 6.33 Scheme of Wankel engine

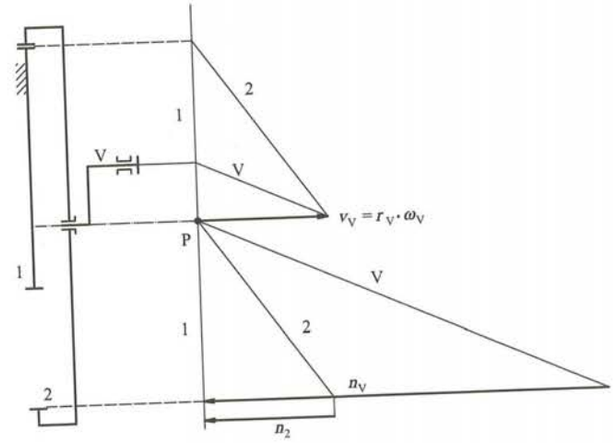

Figure 6.34 Scheme of Wankel engine PGT

6.3 Composed Planetary Gear Trains

Planetary gear trains are composed in order to increase the transmission ratio and the number of output or input members as well as to get more transmission ratios by the same train. They consist of two or more simple PGTs mutually joined in various ways, that is by various members. Also, they can be composed of some (mostly simple) PGT and some ordinary gear train (drive).

6.3.1 Compound Planetary Gear Trains

Compound PGTs consist of two or more simple PGTs mutually joined in series, which means that the output shaft of the first simple PGT (step) is connected with the input shaft of the next. Thus, they are also frequently termed multi-step PGTs. Commonly, their annulus gears are fixed together in the housing, the input member is the sun gear and the output is the carrier's shaft. Their kinematic and structural schemes are presented in Figure 6.35 where the subscripts of member symbols are marked with I for the first step, II for the second, III and so on. The axial section of a two-step planetary reducer is presented in Figure 6.17, that of a three-step reducer in Figure 6.36 and the cut of a four-step multiplier as the drive of a windmill three-phase generator in Figure 6.37.

6.3.2 Parallel Composed Planetary Gear Trains

Simple PGT can be *composed in parallel* – when there is a need to drive more operational machines with one motor (prime mover; Figure 6.38). Thus, the single shaft is the input shaft for a series of simple PGTs which all have one fixed member and one output shaft. This task can be also solved with ordinary drives, but the planetary gearing has a more robust design.

6.3.3 Coupled Planetary Gear Trains

In coupled PGTs two shafts of the two main members of two simple PGTs are connected to shared shafts, Figure 6.39. When two output shafts exist, a *coupled differential train* is obtained, since it has two degrees of freedom. If the output shaft of train II is fixed (joined with the housing), the *real coupled PGT* is obtained, with one output shaft (Figure 6.39b). When one of the simple PGTs is replaced with an ordinary gear drive (train), such a train is

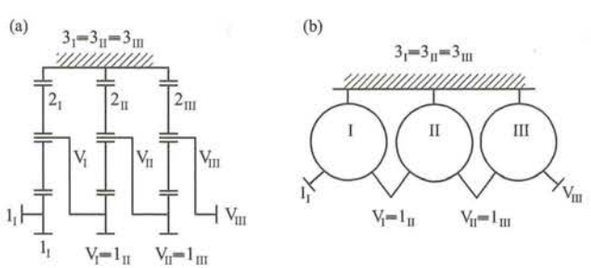

Figure 6.35 Three-step compound PGT: (a) scheme, (b) Wolf structural scheme

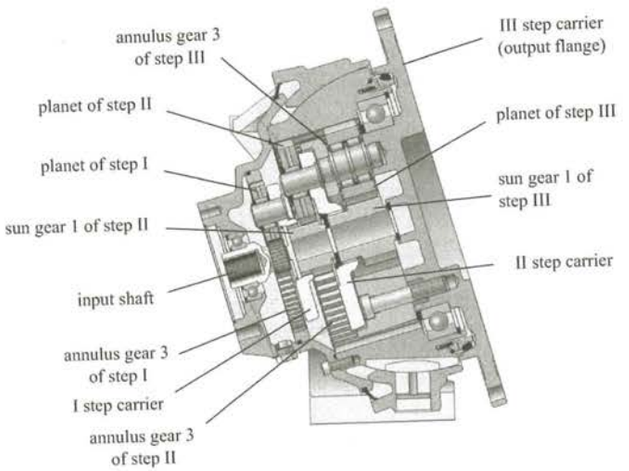

Figure 6.36 Axial section of three-step planetary reducer (See Plate 9)

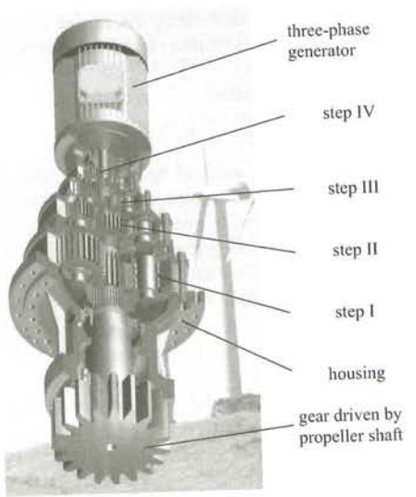

Figure 6.37 Four-step multiplier of wind turbine (See Plate 10)

U.S. Well - Exhibit 2012
Liberty v. U.S. Well - IPR2025-00066
Page 37 of 52

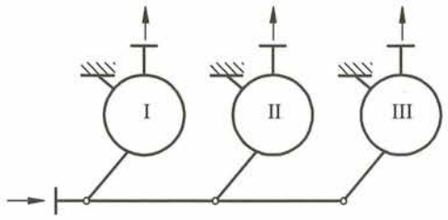

Figure 6.38 Structural schemes of parallel composed PGTs

termed a *closed gear train* (Figure 6.39c). In such trains, the central gear shafts of PGT are somehow connected with the input and output members of the ordinary gear train, whereas the difference in the rotational speeds of central gears is compensated by a carrier being the output member of the entire train (see Section 6.3.4).

6.3.4 Closed Planetary Gear Trains

Connecting the central gears of a planetary differential train with some gears of an ordinary gear train (drive) leads to closed PGTs (Figure 6.39c). Such designed reducers can achieve enormously high transmission ratios, but by low efficiencies. Thus, generally they should not be applied in power transmissions, but only in motion transmissions, usually as regulatory members.

In all closed PGTs the central gears receive the rotary motion by approximately equal rotational speeds whose difference is compensated by the carrier of the differential. The term comes from the fact that gears and shafts form a closed contour of the movable part of the train.

As an example, the schemes and transmission ratios of three characteristic closed PGTs are presented here:

a. A reducer in which the central gears 1 and 3 of the bevel differential are each connected to its own worm wheel made in one piece with the central gear. The input worm z_1 drives its wheel and the cylindrical gear z_3 placed on the same shaft at the same time (Figure 6.40). The gear z_3 is mated with the cylindrical gear z_4 which drives the worm z_5. The difference in the rotational speeds of central bevels 1 and 3 is compensated by the carrier with planets 2 and 2′. The carrier shaft is the output one. The transmission ratio, for single screw

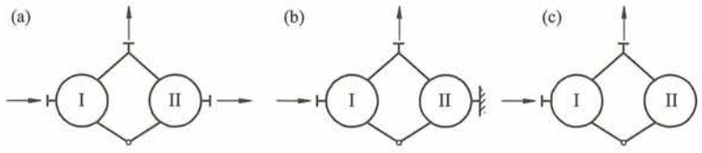

Figure 6.39 Structural schemes of coupled PGTs: (a) coupled differential train, (b) coupled PGT, (c) closed gear train

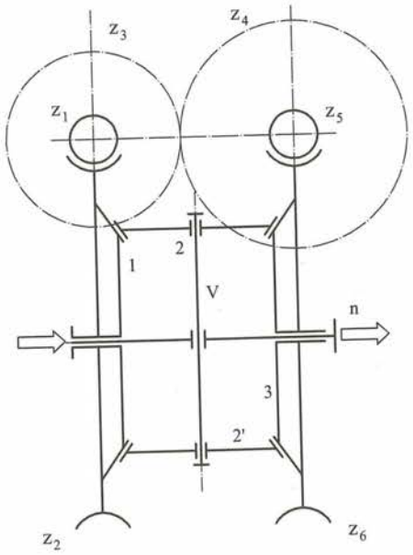

Figure 6.40 Closed PGT with two worm drives and bevel differential

thread worms ($z_1 = z_5 = 1$) is derived to be:

$$i_{1,n} = \frac{n_1}{n_n} = \frac{2z_2z_4z_6}{z_6z_4 - z_2z_3} \tag{6.57}$$

which ranges up to two millions!

The total efficiency is derived to be poor:

$$\eta_{tot} = 2\eta_{1,2}\eta_{3,4}\eta_{5,6}\eta_B\eta_S\eta_{Z0}\frac{\eta_z}{\eta_z - 1}\frac{z_1z_4z_6}{z_1z_4z_6 + z_2z_3z_5}\frac{z_4z_6 + z_2z_3}{\eta_{3,4}\eta_{5,6}z_4z_6 + \eta_{1,2}z_2z_3} \tag{6.58}$$

where η_z is the base efficiency of the bevel differential, $\eta_{1,2}$ and $\eta_{5,6}$ are total efficiencies of the worm drives $z_1 - z_2$ and $z_5 - z_6$ respectively, $\eta_{3,4}$ is the total efficiency of the gear drive $z_3 - z_4$, η_B, η_S and η_{Z0} are bearing, seal and idle motion efficiencies of the bevel differential, respectively. By replacing the worm drives $z_1 - z_2$ and $z_5 - z_6$ with bevel drives this efficiency can be significantly increased.

b. A **Gulyaev reducer** (Figure 6.41a) is the bevel differential with central gears driven by two cylindrical gears of a different number of teeth placed on the same shaft. The transmission ratio of this reducer is:

$$i_{1,n} = \frac{n_1}{n_n} = \frac{2z_2z_5}{z_2z_3 - z_1z_5} \tag{6.59}$$

U.S. Well - Exhibit 2012
Liberty v. U.S. Well - IPR2025-00066
Page 38 of 52

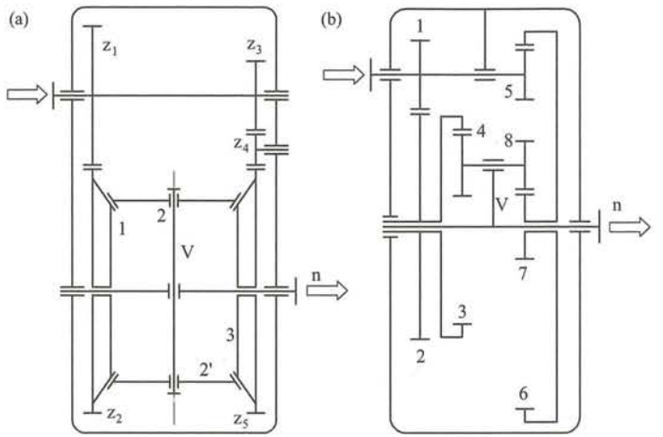

Figure 6.41 Schemes of closed PGTs: (a) Gulyaev's reducer, (b) Homel's reducer

and reaches the value of 10 000 by an efficiency up to 0.94, thus it can be applied in power transmissions. The efficiency equation is the same as in the previous case; just the efficiency $\eta_{3,4} \cdot \eta_{5,6}$ has to be replaced with efficiency $\eta_{4,5}$.

c. A **Homel's reducer** (Figure 6.41b) is a closed PGT where the input cylindrical gears 1 and 5 drive the 2II differential over their central gears 3 and 7 made in one piece with external 2 and internal 6 cylindrical gears. The difference in rotational speeds of the two central gears is compensated by the carrier whose shaft is the output one. The transmission ratio of such a train is obtained as:

$$i_{1,n} = \frac{n_1}{n_n} = \frac{z_2 z_6 (z_3 z_8 + z_4 z_7)}{z_2 z_4 z_5 z_7 - z_1 z_3 z_6 z_8} \tag{6.60}$$

which can reach the value of one million. The efficiency equation is similar to that in Equation (6.58).

6.3.5 *Reduced Coupled Planetary Gear Trains*

In this type of PGTs, not two shafts, but two carriers of simple PGTs are joined in one, or two central (usually annulus) gears which are coupled as one. So, the number of integral parts is reduced and production is made cheaper. It is also possible to apply both reductions at the same time to make the train simpler. By these trains the high transmission ratios can reach good efficiencies, as in Wolfrom or Minuteman Cover PGTs, or a simple reverse can be achieved, as in Ravignaux PGTs applied in automotive automatic transmissions.

Two base schemes of reduced PGTs are illustrated in Figure 6.42 where two simple trains are coupled by joining their carriers in a single one. The Wolfrom train (Figure 6.42a), produced by the Zahnradfabrik Friedrichshafen AG company, consists of two simple trains, 1AI

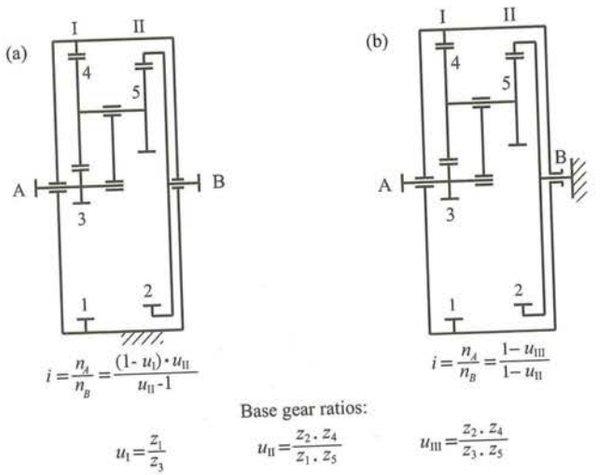

Figure 6.42 Base types of reduced coupled PGTs (a) Wolfrom, (b) Minuteman Cover

and 2II, with fixed central gear 1 of train 1AI and with output shaft B as the shaft of central gear 2 in train 2II. The Minuteman Cover reduced PGT (Figure 6.42b) is structurally the same as that of Wolfrom, but the annulus gear 2 of train 2II is fixed, and the output is by the shaft of annulus gear 1 in train 1A. The transmission ratios of both trains are given together with their schemes (Figure 6.42) depending on the base gear ratios u_I, u_{II} and u_{III} of the coupled trains.

In this way, the transmission ratio of these trains is equal to the product of the ratios of their partial trains, Equations (6.6) and (6.9), but with two gears less than if they were connected in series (see Figure 6.35). Here and hereinafter the partial train 1AI is marked with the Roman numeral I, train 2II with II and train 2AI with III. This is also applied to the subscriptions of the internal partial ratios and efficiencies.

In addition to the described base Wolfram and Minuteman Cover reduced PGTs, any combinations of two of the three partial carriers 1AI, 2II and 2AI, obtained by fixing the various members and changing the ratio of diameters of their central gears 1 and 2, are deemed to be elementary reduced PGT. In total, there are 12 such trains in employment. Their base kinematic schemes (unreduced), base gear ratios, total transmission ratios, base efficiencies and total efficiencies are presented in Table 6.4.

The base gear ratios and base efficiencies of those trains are obtained by multiplying the base gear ratios and base efficiencies of their partial trains (for the fixed main axis, not the carrier). The total transmission ratios and total efficiencies are obtained then from the base gear ratios and the base efficiencies.

The total transmission ratios of such types of PGTs are even easier to calculate from the base Equation (6.3) of simple PGTs. When that equation is applied to each partial train, it is easy to calculate the transmission ratio from the two equations obtained.

U.S. Well - Exhibit 2012
Liberty v. U.S. Well - IPR2025-00066
Page 39 of 52

Table 6.4 Main features of reduced coupled PGTs

Reduced PGTs composed of two partial simple PGTs I (1AI) and II (2II)	Base gear ratio u_p	Total transmission ratio $i = n_A/n_B$	Base efficiency η_{zp}	Total efficiency[a] $\eta_{AB} = -P_B/P_A$
$\frac{d_1}{d_2} > 1$ 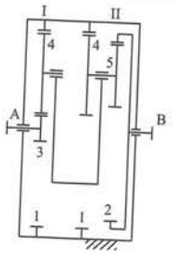	$\frac{(1-u_I)\cdot u_{II}}{u_{II}-1}$	u_p	$\frac{\eta_I u_I - 1}{u_I - 1}\,\frac{u_{II}-1}{u_{II}-\eta_{II}}$	η_{zp}
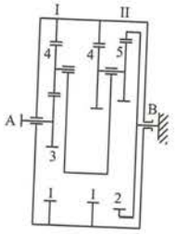	$\frac{1-u_I u_{II}}{u_{II}-1}$			$\frac{u_p\cdot\eta_{zp}-1}{u_p-1}$
$\frac{d_1}{d_2} < 1$ 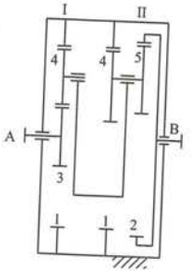	u_p		$\frac{\eta_I\cdot u_I - 1}{u_I - 1}\cdot\frac{\eta_{II}(u_{II}-1)}{\eta_{II}\cdot u_{II}-1}$	η_{zp}
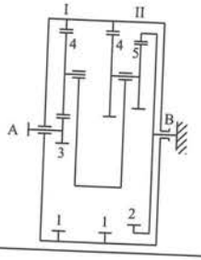	$\frac{1-u_I u_{II}}{u_{II}-1}$			$\frac{u_p\cdot\eta_{zp}-1}{u_p-1}$

(*continued*)

Table 6.4 (*Continued*)

Reduced PGTs composed of two partial simple PGTs I (1AI) and III (2AI)	Base gear ratio u_p	Total transmission ratio $i = n_A/n_B$	Base efficiency η_{zp}	Total efficiency[a] $\eta_{AB} = -P_B/P_A$
$\frac{d_1}{d_2} > 1$ 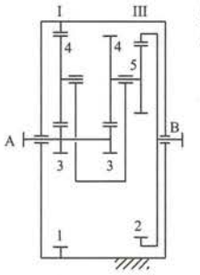	$\frac{u_{III}(u_I-1)}{u_I(u_{III}-1)}$	$\frac{u_{III}-u_I}{u_{III}(1-u_I)}$	$\frac{\eta_I(u_I-1)}{\eta_I\cdot u_I-1}\cdot\frac{u_{III}-\eta_{III}}{u_{III}-1}$	$\frac{u_p-1}{u_p-\eta_{zp}}$
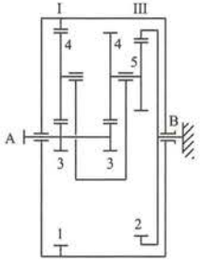		$\frac{u_I-u_{III}}{u_I(1-u_{III})}$		$\frac{\eta_{zp}(u_p-1)}{u_p-\eta_{zp}}$
$\frac{d_1}{d_2} < 1$ 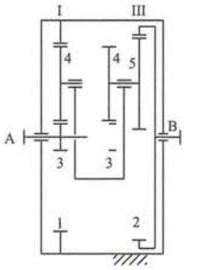		$\frac{u_{III}-u_I}{u_{III}(1-u_I)}$	$\frac{u_I-\eta_I}{u_I-1}\cdot\frac{\eta_{III}(u_{III}-1)}{u_{III}\eta_{III}-1}$	$\frac{\eta_{zp}(u_p-1)}{\eta_{zp}u_p-1}$
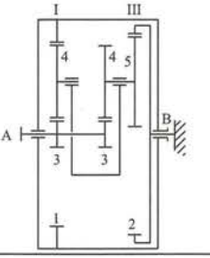		$\frac{u_I-u_{III}}{u_I(1-u_{III})}$		$\frac{u_p-1}{\eta_{zp}u_p-1}$

(*continued*)

U.S. Well - Exhibit 2012
Liberty v. U.S. Well - IPR2025-00066
Page 40 of 52

Table 6.4 (*Continued*)

Reduced PGTs composed of two partial simple PGTs II (2II) and III (2AI)	Base gear ratio u_p	Total transmission ratio $i = n_A/n_B$	Base efficiency η_{zp}	Total efficiency[a] $\eta_{AB} = -P_B/P_A$
$\frac{d_1}{d_2} > 1$ 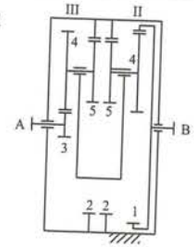	$\frac{1-u_{III}}{1-u_{II}}$	$\frac{u_{II}(u_{III}-1)}{1-u_{II}}$	$\frac{\eta_{II}(u_{II}-1)}{u_{II}-\eta_{II}} \cdot \frac{u_{III}\eta_{III}-1}{u_{III}-1}$	$\frac{u_p\eta_{zp}-1}{u_p-1}$
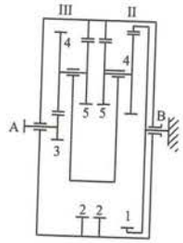		$\frac{1-u_{III}(2-u_{II})}{1-u_{II}}$		η_{zp}
$\frac{d_1}{d_2} < 1$ 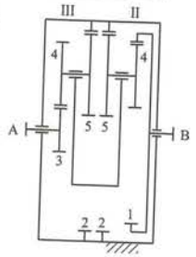		$\frac{u_{II}(u_{III}-1)}{1-u_{II}}$	$\frac{i_{II}-1}{i_{II}\eta_{II}-1} \cdot \frac{i_{III}\eta_{III}-1}{i_{III}-1}$	$\frac{u_p\eta_{zp}-1}{u_p-1}$
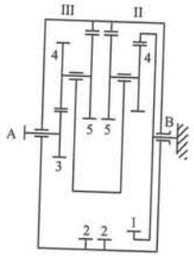		$\frac{1-u_{III}(2-u_{II})}{1-u_{II}}$		η_{zp}

$u_I = \frac{z_1}{z_3}$ $u_{II} = \frac{z_2 \cdot z_4}{z_1 \cdot z_5}$ $u_{III} = \frac{z_2 \cdot z_4}{z_3 \cdot z_5}$

[a]Does not include power losses in bearings, seals and of idle motion.

There are also other reduced PGTs, but they are more complicated and expensive than these described, and they have found no serious application yet. This does not necessarily mean that some new applications will not be patented in the future.

6.3.6 *Reverse Reducers*

One of the features of simple PGTs is the ability to change not only the transmission ratio, but also the direction of rotation of the output shaft by changing the fixed central gear. This feature is utilized for the design of reverse planetary gear reducers (gear boxes).

The kinematic scheme with speed diagrams for drive forward, backward and in idle motion of such a two-step planetary reducer is presented in Figure 6.43a. By activating the brake T_2 the central gears 3a and 1b are braked (fixed), and thus the power is transmitted from central gear 1a over planet 2a, carrier 3b and planet 2b to carrier Vb, whose shaft is the output and rotates in the same direction as the input 1a (Figure 6.43b). When the brake T_1 is activated, the central gear 3b and the carrier Va are fixed, and thus the power is transmitted from central gear 1a over planet 2a, central gears 3a and 1b and planet 2b to the output shaft of the carrier Vb, which rotates in the direction opposite to that of the input (Figure 6.43c). When both brakes are activated, T_1 and T_2, the output shaft of the carrier Vb is at rest, that is the drive is in an idle motion (Figure 6.43d).

In a large ship propulsion of high power the two-step (rarely three-step) planetary reducers with more speeds are built-in, where the number of brakes corresponds to the required number of gear ratios ('speeds'). The structural schemes of such reducers are presented in Figure 6.44. The carrier shaft is the sum one there (see Section 6.1.71) and thus it is marked with a double radial line.

In the scheme in Figure 6.44a (parallel connection of two partial PGTs), by activating the brake T1 or T2, only one partial train operates as a planetary, while the other operates as an ordinary gear drive. In the former case, the rotation of the shared output shaft is in one direction, while in the latter case the direction is opposite. In reducers pursuant to the schemes in Figure 6.44b (two partial PGTs connected serial–parallel), at activated brake T1, the power is transmitted by a single partial train (the right one), while the other operates in idle motion. In

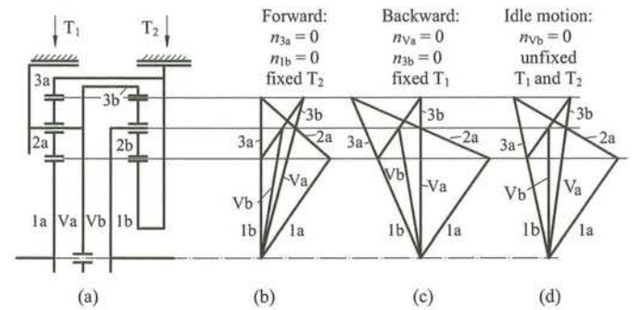

Figure 6.43 Kinematic scheme of two-step reverse planetary reducer: (a) scheme, (b) speed diagram of forward drive, (c) speed diagram of backward drive, (d) speed diagram of idle motion

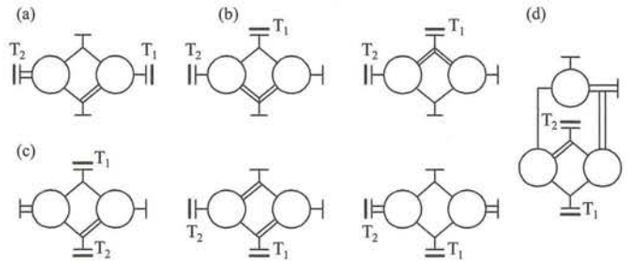

Figure 6.44 Structural schemes of two and three-step planetary reducers of ship drives: (a) parallel connection of two partial trains, (b) serial-parallel connection of two partial trains, (c) serial connection of two partial trains, (d) composite connection of three partial trains

reverse reducers pursuant to the schemes in Figure 6.44c, thanks to the serial connection of two partial trains, both of them are involved in the power transmission when either of brakes is activated, T1 or T2. The possibility of reversing in reducers pursuant to the structural schemes in Figure 6.44b and d is associated with an increasing reactive power which results in reduced efficiency. The most appropriate and therefore recommended are the trains connected in series (diagrams shown in Figure 6.44c), including the reducer in Figure 6.43.

For the ship reversible planetary reducers, the transmission ratios are selected within the limits $i_2/i_1 = -(1.0 \ldots 1.5)$. Their kinematic schemes, together with expressions for the transmission ratios of forward and backward drive which meet this criterion, are presented in Table 6.5. Reducers of the structure pursuant to kinematic scheme 3 are most frequently used. Their field of application is illustrated in Figure 6.45. For base gear ratios $1.0 < u_1 < 7.0$ and $1.0 < u_2 < 3.0$ of the partial trains and for transmission ratios for the forward drive $4 < i_1 < 10$, the lines of constant transmission ratios for backward drive in the form $i_2 = -i_1$ to $i_2 = -2i_1$ are drawn-in, as well as the line of equal base gear ratios $u_1 = u_2$. Choosing the transmission ratio by the latter one enables the maximum unification of elements of partial trains: central gears, planets and their shafts, bearings and clutches.

6.3.7 *Planetary Gear Boxes*

When the closed PGT is formed from two or more simple PGTs and additional brakes and torque converter(s), by forming the various connections, a planetary gearbox is obtained, frequently termed an automatic gearbox, which serves for an automatic change of the transmission ratio of the vehicle drive while moving, freeing the driver from having to shift gears manually.

The driver himself chooses the base way of driving (at least four: slow ride, normal ride, idling, backward ride) and the automatic gearbox uses a torque converter instead of a clutch to manage the connection between the transmission gearing and the engine.

As an example, an automatic (to some extent already obsolete) gearbox will be presented herein, produced by the Zahnradfabrik Friedrichshafen company. Like any PGT, as well as like any demanding mechanical drive, the automatic gearbox is provided with a hydraulic torque converter 1 at its input, Figure 6.46, which by its very high efficiency increases the

Table 6.5 Kinematic schemes of reverse ship planetary reducers

Number	Kinematic scheme	Brake activated	Transmission ratio
1	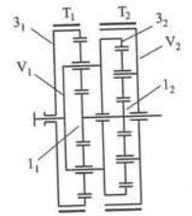	T_1 T_2	$i_1 = 1 + u_1$ $i_2 = -u_2$
2	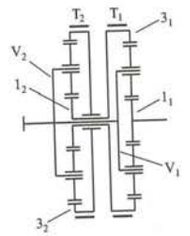	T_1 T_2	$i_1 = 1 + u_1$ $i_2 = 1 - u_1 u_2$
3	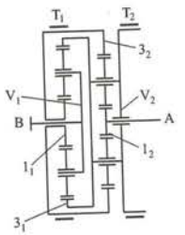	T_1 T_2	$i_1 = \frac{(1+u_1)(1+u_2)}{u_2}$ $i_2 = -u_1(1+u_2)$
4	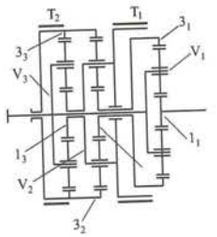	T_1 T_2	$i_1 = 1 + u_1 + \frac{u_1 u_2}{u_3}(1+u_3)$ $i_2 = 1 + u_1 - u_1(1+u_2)(1+u_3)$

Note: u_1, u_2 and u_3 are the base gear ratios of partial trains 1, 2 and 3.

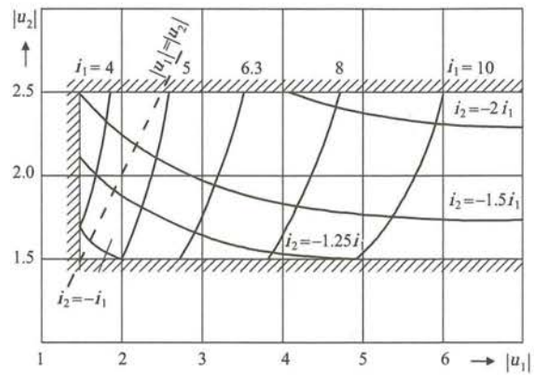

Figure 6.45 Kinematic area of the use of reverse ship planetary reducers by scheme 3 in Table 6.5

torque about 2.5 times. Beside the duties described, the torque converter (same as the hydrodynamic coupling) enables a 'softer' operation, that is damping the impacts, because its shafts are related by fluid flow only – there are no contacts between metal parts rotating at different speeds; thus there is no metal contact between the driving engine and the gearbox.

Different drive models are realized by connecting and separating the different members, that is their shafts, by means of multi-disc brakes and clutches. In a *slow ride*, Figure 6.46, clutch 3 is switched on and the carrier is braked by the one-way coupling 10. When driving downhill, clutch 10 releases the carrier and brake 7 is switched off to enable braking by the motor. The transmission ratio of the planetary carrier is:

$$i_s = 1 + \frac{z_1}{z_3} + \frac{z_1}{z_3}\frac{z_6}{z_4} \tag{6.61}$$

For the original number of teeth of this automatic: $z_1 = z_4 = 28$; $z_2 = z_5 = 14$; $z_3 = z_6 = 56$, yielding $i_s = 2.5$.

In a *normal ride*, clutch 3 and brakes 5 and 6 are switched on, while coupling 10 is free (switched off; Figure 6.46b). The transmission ratio is:

$$i_n = 1 + \frac{z_1}{z_3} = 1 + \frac{28}{56} = 1.5 \tag{6.62}$$

In *idle motion* the transmission ratio $i_p = 1$. Clutch 3 and 4 and brake 6 are switched on, and one-way couplings 10 and 11 are switched off (Figure 6.46c). The entire planetary set rotates as a single block.

In a *ride backward*, clutch 4 and brake 7 are switched on and the carrier is braked (Figure 6.46d). The direction of rotation of the output shaft is opposite to that of the input shaft, that is the motor. The transmission ratio is:

$$i_r = -z_6/z_4 = -2. \tag{6.63}$$

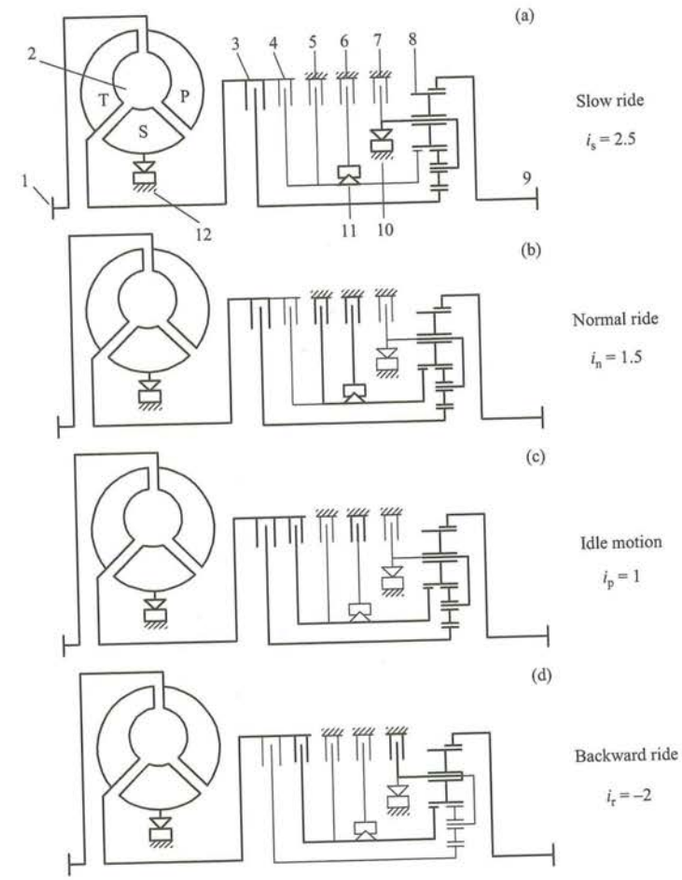

Figure 6.46 Automatic gearbox operation: (a) slow, (b) normal, (c) idle, (d) reverse

6.4 Elements of Planetary Gear Train Design

6.4.1 Issues of Planetary Gear Train Design

The basic duty of designing the PGT is to enable the uniform distribution of a load transmitted from the central gears to the carrier and vice versa. To achieve that, beside the high precision working of all the elements of the train, it is necessary to make flexible all the loaded parts, that is to make them able to compensate the radial shifts which can appear due to imprecise working or assembling, as well as due to impacts in operation, temperature

differences and so on. This flexibility can be achieved in two ways: (i) at least one of the main members has to 'float' with regard to the planets (i.e. must be built-in practically without a support), (ii) all of the elements participating in power transmission are made to be as flexible as possible.

Experience has shown that if the sun gear has less mass and transmits less torque than the other two main members, then it must be designed as a floating member. This does not mean that in other cases it may not be a floating member, or that at the same time another member cannot float. Building-in the sun gear without a bearing is realized by the famous Stoeckicht patent, which allows the sun gear a slight radial shift to adjust the mesh with the planets. If the sun gear due to its weight, centrifugal force, or for any other reason, approaches one of the planets, that is the teeth enter into the mesh deeper, then the radial force acting from the planet increases and returns it back to the correct position. This ensures an even distribution of load from the central gear to the satellites and vice versa.

The flexibility of the central gear is enabled in such a way that its rim is not connected directly to the shaft, but is rather articulated through the gear coupling (Figure 6.47a), which allows small radial and angular misalignments. Increased flexibility can be achieved by a double toothing gear coupling (Figure 6.47b). Increased length of the coupling and its reduced thickness make both the radial and torsional stiffness reduced.

For statically indeterminate PGTs having a number of planets more than three, the non-uniformity of load distribution is high and increases rapidly with the number of planets. Load balancing in such trains can be achieved by increasing the flexibility under the action of the forces in mesh. As a deformable member, the annulus gear is commonly taken, whose rim can be designed to be sufficiently thin also at higher values of bending stresses. An example of a good design of the flexible annulus gear is shown in Figure 6.48. It is also possible to achieve its flexibility by building it in as a floating member, but this is not recommended if it is a single floating member since, under the influence of friction and system inertia, its connection with the shaft loses flexibility.

The flexibility of planets and a more uniform distribution of load can be also achieved by reducing the stiffness of their shafts (Figure 6.49a), or by connecting the planets with shafts by means of elastic bushes made of hard gum or plastic (Figure 6.49b).

A non-floating annulus gear with its shaft can be cantilever supported or supported on both sides. Thus, its cantilever built-in trains with a number of planets more than three does not deteriorate the load distribution over the tooth flank, thanks to a symmetrical arrangement of forces in the toothing. In some trains, for example in the Wolfrom type train in Figure 6.50,

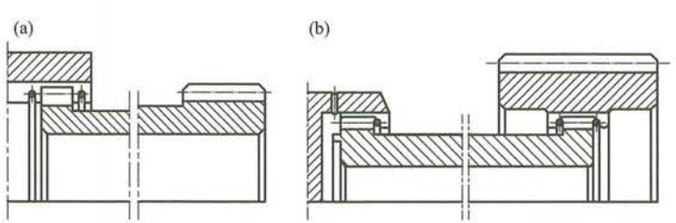

Figure 6.47 Floating central gear: (a) single toothing gear coupling, (b) double toothing gear coupling

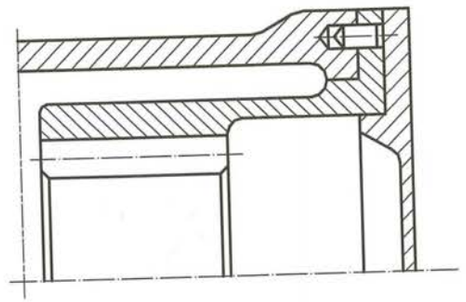

Figure 6.48 Flexible design of annulus gear

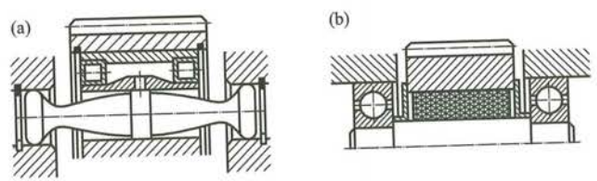

Figure 6.49 Increased flexibility of planets: (a) by elastic shaft, (b) by gum bush

the sun gear shaft is used for placing the carrier bearings (Figure 6.50). Here, as in most other cases, the unfixed annulus gear is set as a cantilever.

The braked annulus gear is ordinarily fixed in the housing by a building-in of its rim into the housing with a bolt joint (Figure 6.36, steps II and III step; Figure 6.37) or is made in one

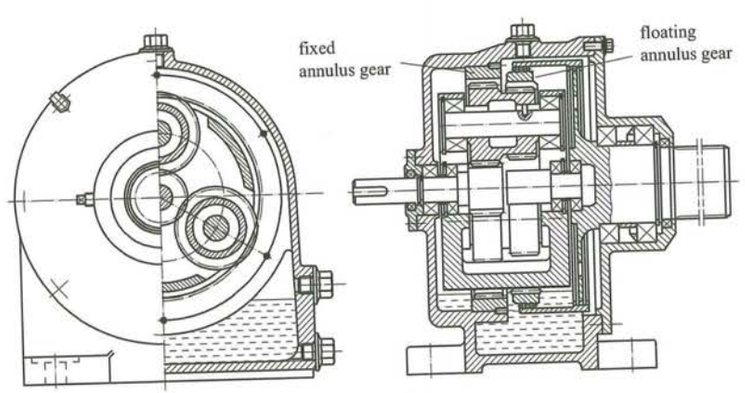

Figure 6.50 Foot-mounted Wolfrom type PGT with floating annulus gear

U.S. Well - Exhibit 2012
Liberty v. U.S. Well - IPR2025-00066
Page 44 of 52

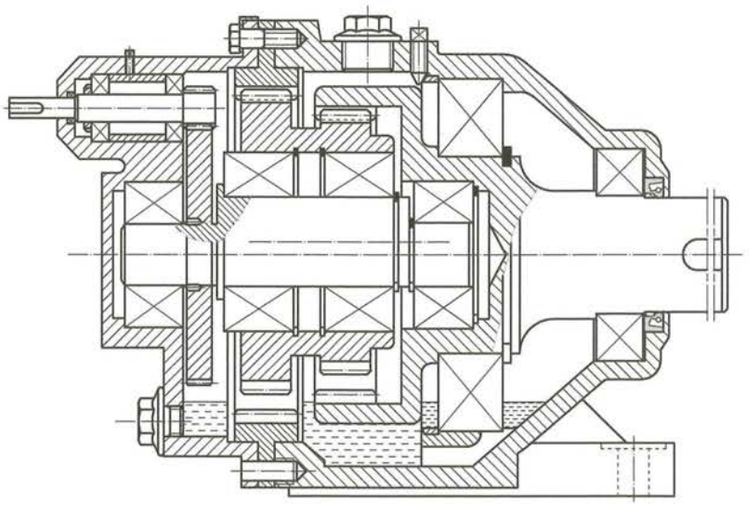

Figure 6.51 Foot-mounted PGT having pre-step of cylindrical gears and annulus gear joined to the housing with flange bolts

piece with the housing (Figure 6.53) and press-fitted (Figures 6.36 and 6.50, step I) or is extended in the form of a flange and joined to the housing with bolts (Figure 6.51). When joined with bolts, like in any flat joint, the annulus gear has to be guarded against any movement of the pins (Figures 6.51 and 6.48).

Much attention should be given to designing the units of planetary pinions and selecting their bearings, since even the slightest misalignment of the pinions significantly impairs the functioning of the PGT.

To be able to operate for a long time, the bearings should be of the correct dimensions. Sometimes it is possible that the dimensions of the bearings determine the design of other elements, that is the layout and size of the entire PGT.

In most PGTs the planets are made in one piece, together with the shaft (Figure 6.52), just like that in Figure 6.51. The shaft is frequently hollow.

Designs with a floating carrier have proved to be efficient only in relative slow speed reducers of lower powers (Figure 6.53).

In certain cases, to reduce size and to save in joining parts, the annulus gear rim is cut directly on the inside of the housing (Figure 6.53).

A robust design of the Wolfrom PGT with helical gears is presented in Figure 6.54, and a 3-D scheme of the base structure of PGT 2AI is presented in Figure 6.55.

The flexibility of the PGT depends also on the shape of the carrier and its support, which can be either a cantilever or supports on both sides. If a cantilever, it is possible to join the body of the carrier with the gear coupling (Figure 6.53). The flexibility can also be increased by reducing the thickness of the carrier walls.

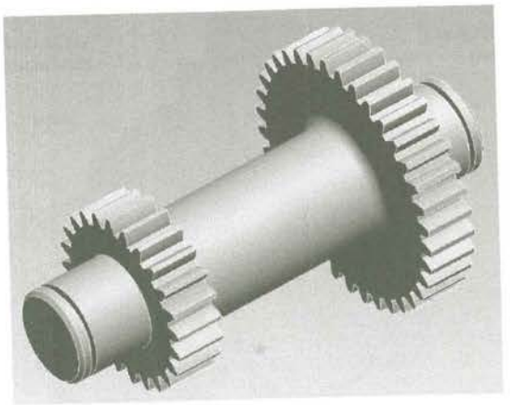

Figure 6.52 Planets in one piece with shaft

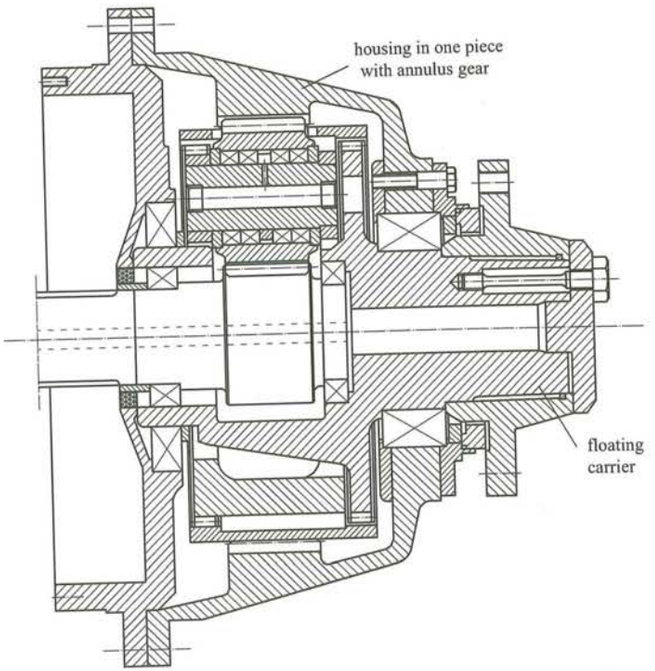

Figure 6.53 Reducer 1AI for heavy vehicle wheel drive, with a floating carrier

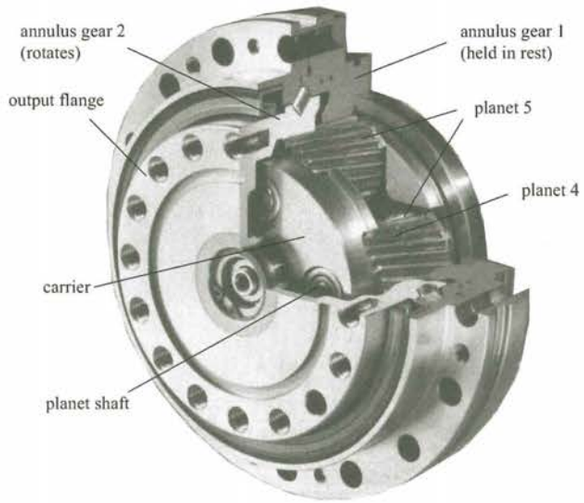

Figure 6.54 Cut-through section of Wolfrom planetary reducer (See Plate 11)

Lubrication of the planet bearings can be challenging, especially at higher carrier speeds. This task can be overcome by experience, better some other engineer's than one's own.

It is established by measurement that the uniformity of load distribution increases with the duration of operation. Therefore, it is desirable to break in the train before delivery, at least for a few hours.

6.4.2 *Calculations for Central Gears and Planets*

Before any other calculation, it is necessary first to check whether the coupling or ruling power of the central gears is higher than the transmitted power. If so, the corresponding members and their shafts and bearings must be calculated for such increased loads.

In determining the forces acting on the shafts and bearings of a PGT, it is commonly taken that forces are concentrated in the middle of a gearing, although the load is distributed evenly throughout the length of the tooth. In this way, expressions for forces in the gearing remain the same as in ordinate gear drives. In that, clearly, the total torque and the corresponding peripheral forces are divided into as many parts as there are planets. However, this division is unequal: it becomes greater as the number of planets increases (above three). In order to obtain an approximate value of the actual peripheral force F_t, it is necessary to multiply its nominal value by the load-sharing factor K_γ (see Section 3.6). Thus:

$$F_t = \frac{2T}{d \cdot N} K_\gamma \tag{6.64}$$

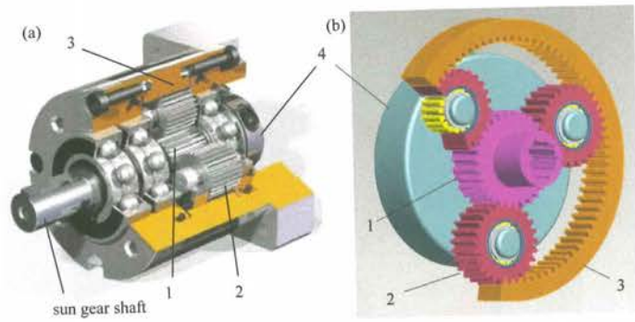

Plate 1 Simple planetary mechanism with three planets joined by carrier: (a) cut of real train, (b) simplified 3-D model

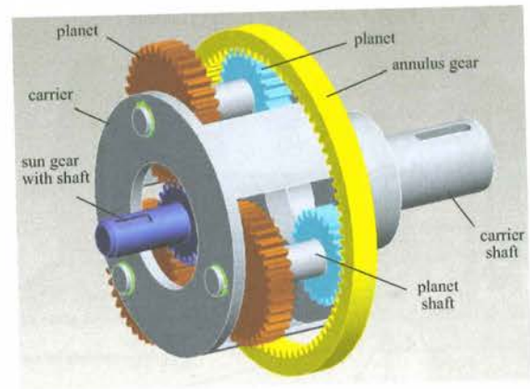

Plate 2 3-D scheme of simple differential gear train

Gears and Gear Drives, First Edition. Damir Jelaska.
© 2012 John Wiley & Sons, Ltd. Published 2012 by John Wiley & Sons, Ltd.

U.S. Well - Exhibit 2012
Liberty v. U.S. Well - IPR2025-00066
Page 46 of 52

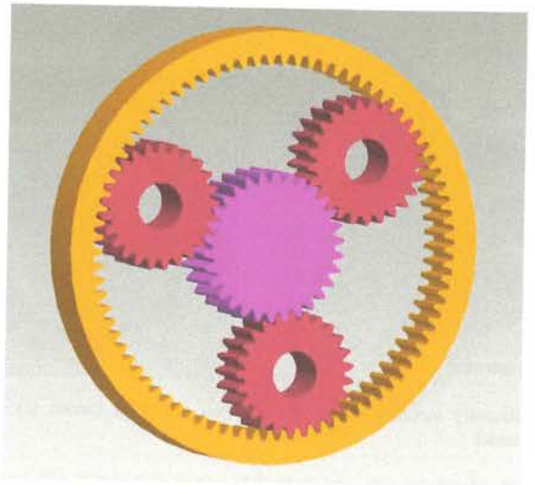

Plate 3 Example of correct assembly

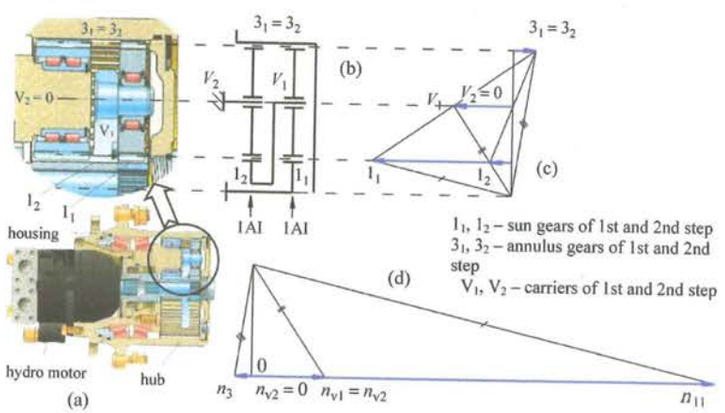

Plate 4 Speed diagrams for PGT of a dredger wheel: (a) axial section, (b) scheme, (c) peripheral speed diagram, (d) rotational speed diagram

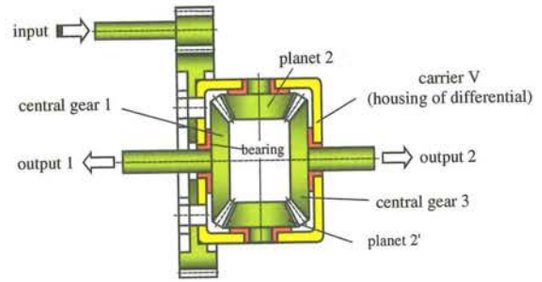

Plate 5 Simplified section of a bevel differential train

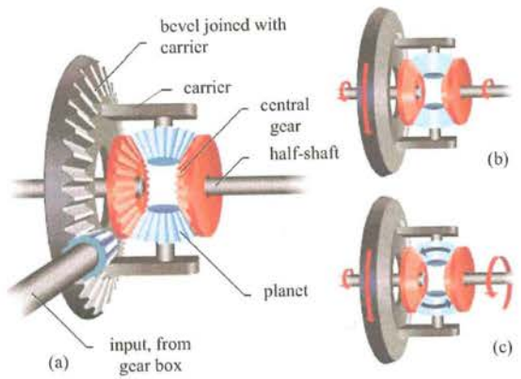

Plate 6 Planetary bevel train: (a) 3-D model, (b) straight ride, (c) ride in turn of road

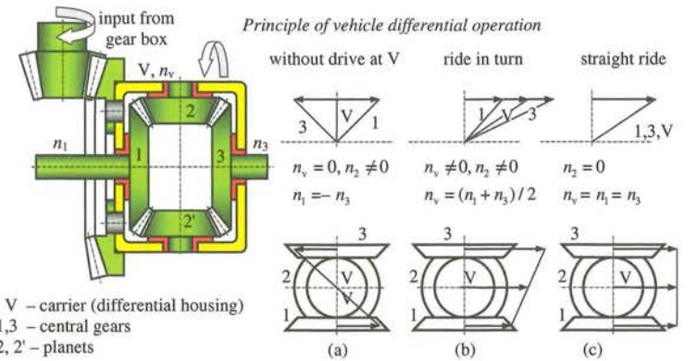

Plate 7 Bevel differential train: (a) with fixed carrier, (b) different rotational speeds of wheels at ride in turn, (c) straight ride – same rotational speed (and power) of both wheels

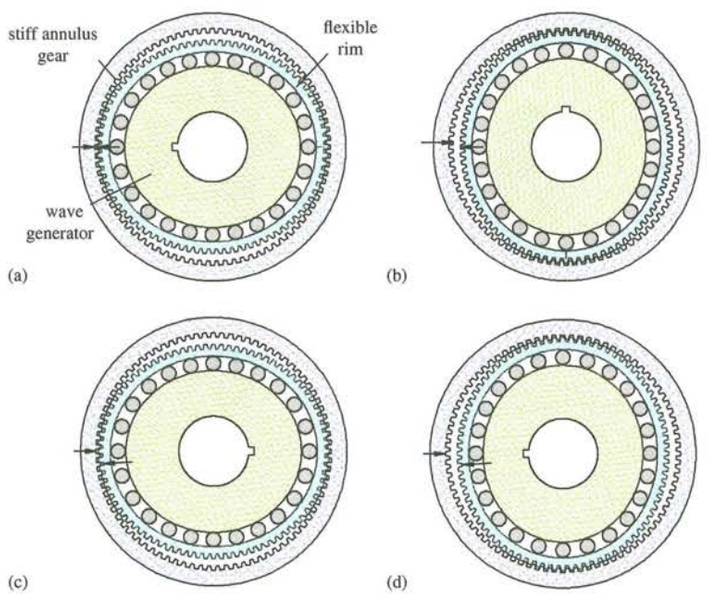

Plate 8 Operating principle of harmonic drive: (a) starting position, (b) generator turned through 90°, (c) generator turned through 180°, (d) full turn (360°) of generator

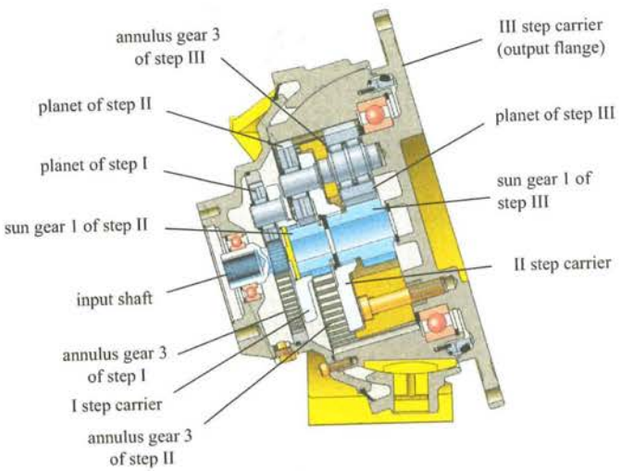

Plate 9 Axial section of three-step planetary reducer

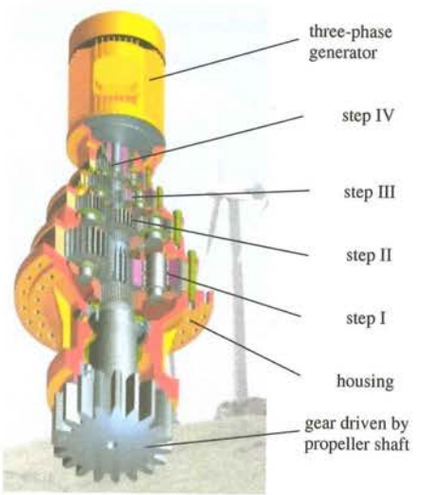

Plate 10 Four-step multiplier of windmill

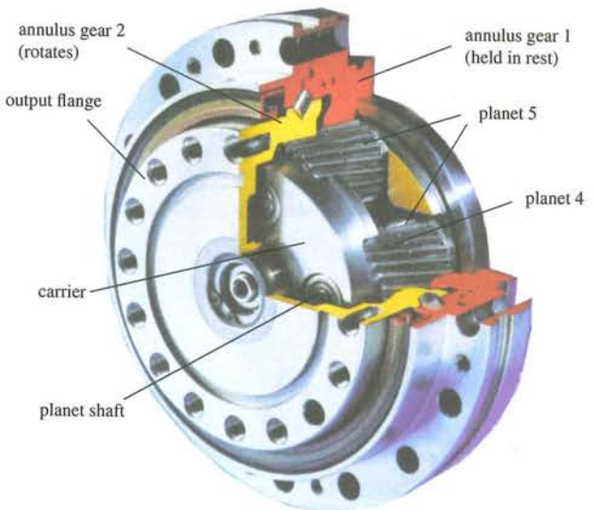

Plate 11 Cut-through section of Wolfrom planetary reducer

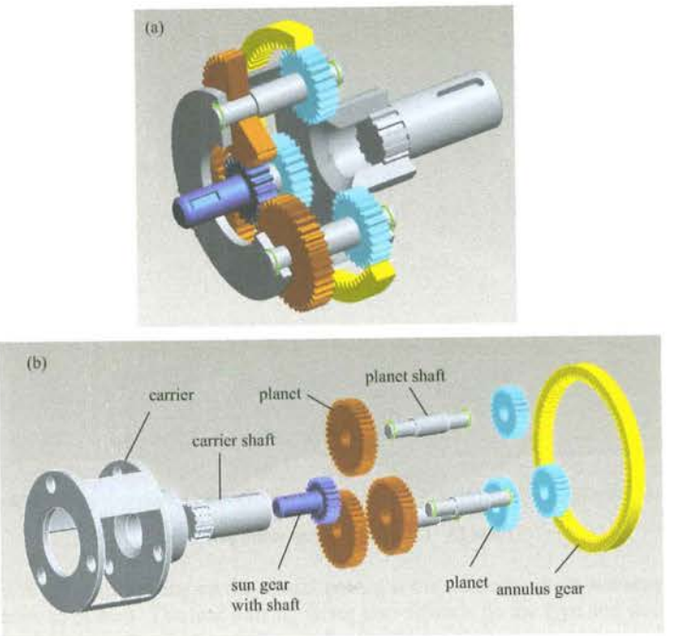

Plate 12 Base structure of 2AI PGT: (a) 3-D scheme of train, (b) main components

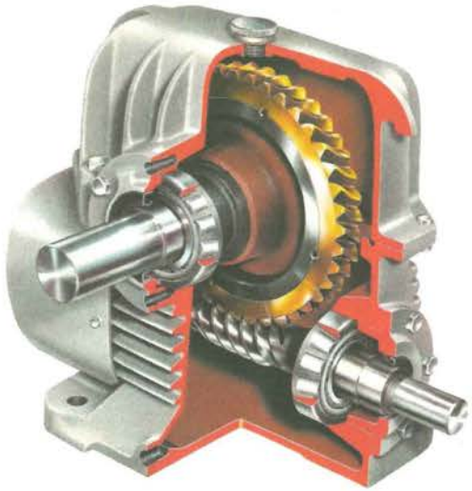

Plate 13 Common one-step worm gear drive

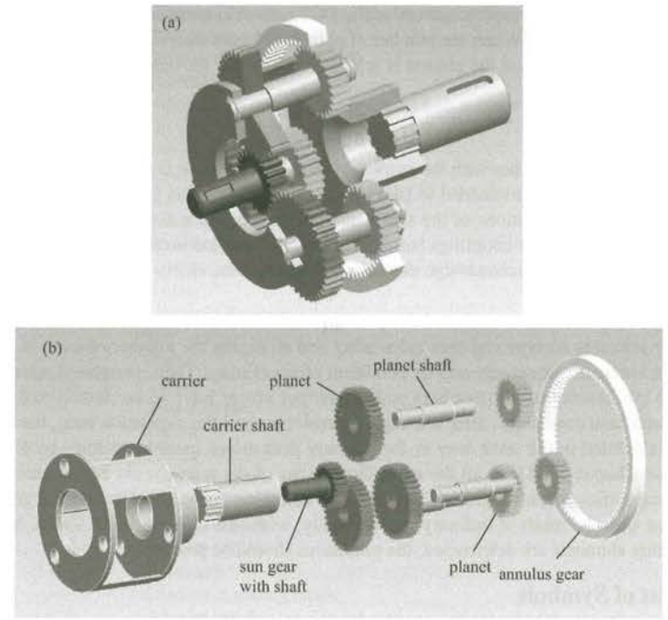

Figure 6.55 Base structure of 2AI PGT: (a) 3-D scheme of train, (b) main components (See Plate 12)

where T is the torque acting on the central gear, d is the reference circle diameter and N is the number of planets. The load-sharing factor also depends on the type and design of the train, on the precision of its working, on the flexibility of the main components and on which member is floating. For a precise calculation of the required train, it should be determined by testing. If this is not possible for any reason, then for trains of types 1AI and 2AI with three planets, a floating sun gear 1 and a floating annulus gear 3 having a flexible rim, in the design phase, it can be taken that $K_\gamma = 1.1$, otherwise:

$$K_\gamma \approx 1 + 0.25\sqrt{N-3}. \tag{6.65}$$

In PGTs, the bearings of the planets are loaded by their own centrifugal forces, which can exceed the value of the force in the gearing at higher speeds. The vector of the planet centrifugal force lies in the same plane as the radial force, and its origin is in the centre of the planet mass. Centrifugal and radial forces are perpendicular to the axis of the planet, but their directions can be the same or different, depending on the carrier design. Thus, the centrifugal force can both increase (in carrier 1AI) and decrease (in most of the other carriers) the load of the bearing.

U.S. Well - Exhibit 2012
Liberty v. U.S. Well - IPR2025-00066
Page 50 of 52

The shafts of the main shaft members of the PGT carrier in most cases carry only a part of the forces in the gearing. When the number of planets is larger than one, because of inaccuracies of working, the load on the planets is uneven. As a result, the bearings of the main member are loaded by force:

$$F_L = \frac{2T}{d \cos\beta \cos\alpha_n} \frac{K_\gamma - 1}{N - 1} \nu \tag{6.66}$$

whose vector rotates together with the carrier. In Equation (6.66), ν is the bearing load-sharing factor, for which it is recommended to take $\nu = 0.8$. At $K_\gamma \leq 1.2$, this force can be neglected.

In more precise calculations of the shafts and bearings of the main members the influence of reactive torques of gear couplings has to be accounted for, and in trains with a single planet it is important to keep in account that the same forces act at the shafts of the main members as well as at the planets.

For a given transmission ratio and the power to be transferred, the process of PGT design begins by selecting its type and then calculating and arranging the number of teeth in accordance with kinematic equations and its condition of co-axiality. Then, peripheral speeds, torques, the efficiencies of all members and the output power have to be determined. Under given operational conditions, after selecting the materials and the dimension ratio, the module is to be calculated in the same way as for ordinary gear drives [peripheral force by Equation (6.65); see Chapter 3]. Then, all the main dimensions of the train should be determined and the load capacities check should be carried out by assessing the mesh of the central gears and planets, as with the mesh of ordinary gears. Finally, when the dimensions of shafts, bearings and all other elements are determined, the tolerances should be prescribed.

6.5 List of Symbols

Symbol	Unit	Description
Principal symbols and abbreviations		
1AI	—	Train with all planets in one plane, with one being both sun and annulus gear
2AI	—	Train with planets in two planes, with one being both sun and annulus gear
2AA	—	Train with planets in two planes, with two sun gears
2II	—	Train with planets in two planes, with two annulus gears
1	—	Central gear 1
2	—	Planet 2
2′	—	Planet 2′
3	—	Central gear 3
1a	—	Central gear 1 of drive a
1b	—	Central gear 1 of drive b
2a	—	Planet 2 of drive a
2b	—	Planet 2 of drive b
3a	—	Central gear 3 of drive a
3b	—	Central gear 3 of drive b
A	m/s	Speed presented by 1 cm
B	cm	Length presented by 1 cm
a	mm	Centre distance
d	mm	Diameter
F	N	Force
f	mm	Distance between planets

H	mm	Distance of rotational speed line from kinematic pole P
i	—	Transmission ratio
j	—	Number of rotating members
K	—	Coefficient
k	—	Number of higher kinematic pairs; whole number
l	mm	Distance between planet axes
	—	Number of lower kinematic pairs
N	—	Number of planets
n	min^{-1}	Rotational speed
P	W	Power
PGT	—	Planetary gear train
p	—	Greatest common divisor of numbers z_2 and $z_{2'}$
r	mm	Radius
S	—	Degree of freedom
s	—	Self-locking factor
T	—	Brake
T	Nm	Torque
u	—	Base gear ratio
V	—	Carrier
Va	—	Carrier of train a
Vb	—	Carrier of train b
v	m/s	Peripheral speed
z	—	Number of teeth
α	°	Pressure angle
η	—	Efficiency
ν	—	Load mesh sharing factor
υ	s^{-1}	Angular speed

6.5.1 *Subscripts to Symbols*

0	Idle motion	L	Rest
1	Central gear 1	n	Normal plane; normal drive; output shaft
1b	From 1 to b	o	Output
1v	From central gear 1 to carrier	p	PGT; reduce composed; idle motion
2	Mating planet of central gear 1	r	Ride backward
2′	Mating planet of central gear 3	roll	Rolling
3	Central gear 3	s	Slow ride
3a	From member 3 to member a	c	Coupling
3b	From member 3 to member b	t	Transverse plane; peripheral; total
3v	From central gear 3 to carrier	Va	From carrier to member a
A	Train input	Vb	From carrier to member b
AB	From A to B	v	Carrier
a	Tip circle	v1	From carrier to central gear 1
B	Train output	v3	From carrier to central gear 3
BA	From B to A	c	Coupling
c	Coupling	w	Pitch circle
fr	Friction	I, II, . . .	First, second step and so on
in	Input		

6.5.2 Combined Symbols

i_T	Nm	Torque ratio	P_S	W	Power losses due to sealing
K_s	—	Load sharing factor between planets	P_{Z0}	W	Power losses in idle motion
M_d	cm	Length scale	u_I, u_{II}, u_{III}	—	Base gear ratios of base types of reduce composed PGTs
M_n	s^{-1}	Rotational speed presented by 1 cm	u_p	—	Base gear ratio of reduce composed gear train
M_v	m/s	Peripheral speed scale	a_n	°	Pressure angle of base tooth profile
m_n	mm	Normal module	η_B	—	Bearing efficiency
η_S	—	Seal efficiency	η_p	—	Mesh efficiency of train
η_z	—	Base efficiency	η_{pt}	—	Total efficiency of PGT
η_{Z0}	—	idle motion efficiency	η_z	—	Base efficiency
η_{zp}	—	Base efficiency of reduce composed gear train	η_{Z0}	—	Idle motion efficiency
P_B	W	Power losses due to friction in bearings	η_{zp}	—	Base efficiency of reduce composed gear train
P_L	W	Rest power losses			