IN THE UNITED STATES PATENT AND TRADEMARK OFFICE
BEFORE THE PATENT TRIAL AND APPEAL BOARD

In re U.S. Patent No. 10,598,258

Filed: December 5, 2018

Issued: March 24, 2020

Inventor(s): Jared Oehring et al.

Assignee: U.S. Well Services, LLC

Title: Multi-plunger Pumps and Associated Drive Systems

In re U.S. Patent No. 11,959,533

Filed: July 24, 2023

Issued: April 16, 2024

Inventor(s): Jared Oehring et al.

Assignee: U.S. Well Services Holdings, LLC

Title: Multi-plunger Pumps and Associated Drive Systems

Mail Stop PATENT BOARD, PTAB
Patent Trial and Appeal Board
U.S.P.T.O.
P.O. Box 1450
Alexandria, VA 22313-1450

I, Michael Nikolaou, make this declaration in connection with patent owner responses submitted by Patent Owner for U.S. Patent Nos. 10,598,258 and 11,959,533. All statements made herein of my own knowledge are true, and all statements made herein based on information and belief are believed to be true, and further that these statements were made with the knowledge that willful false statements and the like so made are punishable by fine or imprisonment, under Section 1001 of Title 18 of the United States Code. Although I am being compensated for my time in preparing this declaration, the opinions expressed herein are my own, and I have no stake in the outcome of this proceeding or any related litigation or administrative proceedings.

Date: February 21, 2025

Michael Nikolaou, Ph.D.

U.S. Well - Exhibit 2024
Liberty v. U.S. Well - IPR2025-00066
Page 2 of 64

TABLE OF CONTENTS

I. INTRODUCTION 5
II. QUALIFICATIONS AND COMPENSATION 19
III. RELEVANT LEGAL STANDARDS 24
A. Obviousness 24
B. Construing the Meaning of Claim Terms 27
IV. BACKGROUND OF THE TECHNOLOGY 28
V. CHALLENGED PATENTS 29
A. Background 29
1. The Prosecution History 31
2. The Challenged Claims 34
VI. CLAIM CONSTRUCTION 35
VII. ASSERTED PRIOR ART 36
A. *Buckley* (EX-1004 and EX-1005) 36
1. *Buckley* (EX-1005) 36
2. Buckley Provisional (EX-1005) 37
B. *Bergan* (EX-1006) 39
C. *Rosman* (EX-1007) 41
D. *Payne* (EX-1008) 42
E. *Yi* (EX-1010) 43
F. *Jelaska* (EX-1012 and EX-2012) 44
G. *Tutterow* (EX-1013) 45
H. Asserted Prior Art Specific to ’258 Patent 45
1. *Nesbitt* (EX-1014) 45
I. Asserted Prior Art Specific to ’533 Patent 46
1. *August* (EX-1014) 46
2. *Morris* (EX-1015) 47
3. *Joyner* (EX-1016) 48

U.S. Well - Exhibit 2024
Liberty v. U.S. Well - IPR2025-00066
Page 3 of 64

4. *Karassik* (EX-1017) 49
VIII. A POSITA WOULD NOT HAVE FOUND THE CLAIMS OBVIOUS FOR THE REASONS DISCUSSED IN THE PETITION.....50
A. Dr. Durham's POSITA Would Not Have the Necessary Qualifications To Make the Modification that He Proposes Because Such a POSITA Would Not Have Had Sufficient Understanding of Gear System Technology.....50
IX. CONCLUSION.....64

U.S. Well - Exhibit 2024
Liberty v. U.S. Well - IPR2025-00066
Page 4 of 64

I. Introduction

1. I am making this declaration at the request of U.S. Well Services, LLC in the matter of the *Inter Partes* Review of U.S. Patent Nos. 10,598,258 (the "'258 patent") and 11,959,533 (the "'533 patent"). Both were invented by Oehring et al. ("Oehring"), assigned to U.S. Well Services, LLC ("Patent Owner" or "USWS"). I understand that Patent Owner has sued Liberty Energy Inc. ("Petitioner") in *U.S. Well Services, LLC, et al. v. Liberty Energy Inc., et al.*, Case No. 4:24-cv-00839 (S.D. Tex.), where it has accused Petitioner of infringing the '258 patent and the '533 patents.

2. In the preparation of this declaration, I have reviewed the following documents for the *Inter Partes* Review proceeding involving the '258 patent:

Exhibit No.	Description
1001	U.S. Patent No. 10,598,258 to Oehring et al., titled "Multi-plunger Pumps and Associated Drive Systems" (the "'258 patent")
1002	File History for U.S. Patent No. 10,598,258
1003	Declaration of Dr. Robert Durham
1004	U.S. Patent Publication No. 2020/0256429 to Buckley, "Electric Drive Pump for Well Stimulation" ("*Buckley*"), filed September 25, 2018, and published August 13, 2020.
1005	U.S. Provisional Application No. 62/562,943 to Buckley et al., "Electric Drive Pump for Well Stimulation" ("*Buckley Provisional*"), filed September 25, 2017.

Exhibit No.	Description
1006	U.S. Patent Publication No. 2015/0361736 to Bergan *et al.*, "Heave Compensation Winches," ("*Bergan*"), filed June 13, 2014, and published December 17, 2015.
1007	United States Patent No. 4,100,822 to Rosman, "Drive System for a Moving Mechanism" ("*Rosman*"), filed April 19, 1976, and granted July 18, 1978.
1008	U.S. Patent Publication No. 2016/0258267 to Payne et al., "Well Fracturing Systems with Electrical Motors and Methods of Use" ("*Payne*"), filed March 3, 2016, and published September 8, 2016.
1009	Chinese Publication No. CN103742382A to Yi, "Fracturing Pump Transmission System and Fracturing Truck" ("*Yi*"), filed December 30, 2013, and published April 23, 2014.
1010	Certified English Translation of *Yi* and Translator's Declaration
1011	Merriam-Webster Online Dictionary, "Pinion," captured by the Internet Archive on August 17, 2017, available at <https://web.archive.org/web/20170817030125/https://www.merriam- webster.com/dictionary/pinion>.
1012	D. T. Jelaska, "*Gears and Gear Drives*," John Wiley & Sons, 2012.
1013	Tutterow, V. and McKane, A. T., "Variable Speed Pumping: A Guide to Successful Applications," Europump and Hydraulic Institute, 2004.
1014	Nesbitt, B., "Handbook of Pumps and Pumping: Pumping Manual International," Elsevier, 2006.
1015	Camara, John A., "Electrical Engineering Reference Manual for the Electrical and Computer PE Exam," 6th ed. (Professional Publications, Inc. 2002), ISBN: 1-888577-56-8.

Exhibit No.	Description
1016	Gardner Denver GD-2500 Quintuplex Well Servicing Pump Operating and Service Manual, captured by the Internet Archive on Sept. 17, 2005, available at <https://web.archive.org/web/20120917102614/http:/www.quincieoilfield.com/pdf/3.0%20Gardner%20Denver/2500/GD2500Q%20Op%20 &%20Service%20Manual.pdf>.
1017	Morton, M., "Unlocking the Earth: A Short History of Hydraulic Fracturing," GEO ExPro, Vol. 10, No. 6, December 2013 (https://geoexpro.com/unlocking-the-earth-a-short-history-of-hydraulic-fracturing/) (last accessed September 16, 2024).
1018	Merriam-Webster Online Dictionary, "Quintuple," captured by the Internet Archive on February 2, 2017, available at <https://web.archive.org/web/20170202121725/https://www.merriam- webster.com/dictionary/quintuple>.
1019	Mark's Standard Handbook for Mechanical Engineers, Eleventh Edition, McGraw-Hill Companies, New York, 2007.
1020	Langewis, Jr., C. and Gleeson, C. W., "Practical Hydraulics of Positive Displacement Pumps for High-Pressure Waterflood Installations," Society of Petroleum Engineers, February 1971.
1021	Lewis, M. J. T., "Gearing in the ancient world," Pergamon Press Ltd. 1993.
1022	Mabie, H. H., Reinholz, C. F., "Mechanics and Dynamics of Machinery" (4th ed. 1987), John Wiley & Sons.
1023	Pawar, P. V. and Kulkarni, P. R., "Design of two stage planetary gear train for high reduction ratio," *International Journal of Research in Engineering and Technology,* vol. 4, no. 6, pp. 150-157, June 2015.
1024	Fink, Donald G., STANDARD HANDBOOK FOR ELECTRICAL ENGINEERS, 13th ed. (McGraw-Hill, New York: 1993), ISBN: 0-07-020984-7.
1025	U.S. Patent Publication No. 2011/0241590 to Horikoshi et al., titled "Motor Driving Apparatus Having Fault Diagnostic Function," filed February 11, 2011, and published October 6, 2011.

Exhibit No.	Description
1026	Roethemeyer, Dale E., Yankaskas, David R., "Evolution of Motor and Variable Frequency Drive Technology," in *ACEEE Summer Study Proceedings on Energy Efficiency in Industry*, 1995, pp. 541-552.
1027	U.S. Patent No. 3,186,222 to Martin, "Well Signaling System," filed July 28, 1960, and issued June 1, 1965.
1028	U.S. Patent No. 3,075,136 to Jones, "Variable Pulse Width Parallel Inverters," filed August 31, 1961, and issued January 22, 1963.
1029	U.S. Patent No. 3,262,036 to Clarke et al, "Means for Smoothly Varying the Speed of a Star-Connected Polyphase Induction Motor," filed September 19, 1962, and issued July 19, 1966.
1030	Shepherd, William and Stanway, Jack, "Unbalanced Voltage Control of 3-Phase Loads by the Triggering of Silicon Controlled Rectifiers," *IEEE Transactions on Industry and General Applications*, no. 3, pp. 206-216, 1965.
1031	Hickok, H. N., "Adjustable Speed—A Tool for Saving Energy Losses in Pumps, Fans, Blowers, and Compressors," *IEEE Transactions on Industry Applications*, no. 1, pp. 124-136, 1985.
1032	DeWinter, Frank A. and Kedrosky, Brian J., "The Application of a 3500-hp Variable Frequency Drive for Pipeline Pump Control," in IEEE Transactions on Industry Applications, Vol. 25, No. 6, 1019-1024, 1989.
1033	Perrin, M., Kohn, G., Mugford, S., Seggewiss, G., "Induction Motors, Reciprocating Compressors and Variable Frequency Drives," *Record of Conference Papers. IEEE Industry Applications Society 44th Annual Petroleum and Chemical Industry Conference*, 15-17 Sept. 1997, pp. 1-9, doi: 10.1109/PCICON.1997.648162.
1034	Lockley, B., Wood, B., Paes, R., DeWinter, F., "IEEE Std 1566 - The Need for a Large Adjustable Speed Drive Standard," in *2006 Record of Conference Papers - IEEE Industry Applications Society 53rd Annual Petroleum and Chemical Industry Conference*, 11-15 Sept. 2006, pp. 1-10, doi: 10.1109/PCICON.2006.359687.

Exhibit No.	Description
1035	Manz, L. B., "The motor designer's viewpoint of an adjustable speed drive specification," *IEEE Industry Applications Magazine*, vol. 1, no. 1, pp. 16-21, 1995.
1036	Baseer, M., "Electric Machines and Adjustable Speed Drives," in University of Bradford Electric and Telecommunications Research Seminar Series, 8th Workshop Proceedings, April 1, 2009, 131-134.
1037	Declaration of Sylvia Hall-Ellis, Ph.D.
1038	Plaintiff's Motion for Leave to File the Second Amended Complaint, *U.S. Well Services, LLC et al. v. Liberty Energy, Inc. et al.*, No. 4:24- cv-00839 (S.D. Tex. September 19, 2024)
1039	Claim Listing for Claims of '258 Patent
1040	*Interim Procedure for Discretionary Denials in AIA Post-Grant Proceedings with Parallel District Court Litigation* (June 21, 2022)
1041	Federal Court Management Statistics (June 30, 2024), *available at* <https://www.uscourts.gov/sites/default/files/data_tables/fcms_na_ap pprofile0630.2024.pdf>
1042	File History for U.S. Patent No. 11,959,533
1043	Wells, B.A., Wells, K.L, "Shooters – A "Fracking" History," American Oil & Gas Historical Society, https://aoghs.org/technology/hydraulic-fracturing, last updated March 7, 2024.
1044	Montgomery, Carl T., Smith, Michael B., "Hydraulic Fracturing, a History of an Enduring Technology," Journal of Petroleum Technology 62 (12), December 2010.
1045	Bourgoyne, Adam T. Jr., et al., "Applied Drilling Engineering," Society of Petroleum Engineering Textbook Series, Volume 2, 1986.
1046	Vasilliou, Marius S., "Historical Dictionary of the Petroleum Industry," Second Edition, Rowman & Littlefield, 2018.

Exhibit No.	Description
1047	U.S. Patent Publication No. 2013/0306322 to Sanborn et al., titled "System and Process for Extracing Oil and Gas by Hydraulic Fracturing," filed December 7, 2012, and published November 21, 2013.
1048	U.S. Patent Publication No. 2012/0255734 to Coli et al., titled "Mobile, Modular, Electrically Powered System for Use in Fracturing Underground Formations," filed April 6, 2012, and published October 11, 2012.
1049	U.S. Patent No. 9,410,410 to Broussard et al., titled "System for Pumping Hydraulic Fracturing Fluid using Electric Pumps," filed November 16, 2012, and issued August 9, 2016.
1050	Johns, Cort MacLean, "Industrial Revolutions: From Ctesibius to Mars," ABC Book Center, 2021.

3. Similarly, and in the preparation of this declaration, I have reviewed the following documents for the *Inter Partes* Review proceeding involving the '533 patent:

Exhibit No.	Description
1001	U.S. Patent No. 11,959,533 to Oehring et al., titled "Multi-plunger Pumps and Associated Drive Systems" (the "'533 patent")
1002	File History for U.S. Patent No. 11,959,533
1003	Declaration of Dr. Robert Durham
1004	U.S. Patent Publication No. 2020/0256429 to Buckley, "Electric Drive Pump for Well Stimulation" ("*Buckley*"), filed September 25, 2018, and published August 13, 2020.
1005	U.S. Provisional Application No. 62/562,943 to Buckley et al., "Electric Drive Pump for Well Stimulation" ("*Buckley Provisional*"), filed September 25, 2017.

Exhibit No.	Description
1006	U.S. Patent Publication No. 2015/0361736 to Bergan et al., "Heave Compensation Winches" ("*Bergan*"), filed June 13, 2014, and published December 17, 2015.
1007	United States Patent No. 4,100,822 to Rosman, "Drive System for a Moving Mechanism," ("*Rosman*") filed April 19, 1976 and granted July 18, 1978.
1008	U.S. Patent Publication No. 2016/0533267 to Payne et al., "Well Fracturing Systems with Electrical Motors and Methods of Use" ("*Payne*"), filed March 3, 2016, and published September 8, 2016.
1009	Chinese Publication No. CN103742382A to Yi, "Fracturing Pump Transmission System and Fracturing Truck," ("*Yi*"), filed December 30, 2013, and published April 23, 2014.
1010	Certified English Translation of *Yi* and Translator's Declaration
1011	Merriam-Webster Online Dictionary, "Pinion," captured by the Internet Archive on August 17, 2017, available at <https://web.archive.org/web/20170817030125/https://www.merriam- webster.com/dictionary/pinion>.
1012	D. T. Jelaska, *Gears and Gear Drives*. John Wiley & Sons, 2012.
1013	V. Tutterow and A. T. McKane, "Variable Speed Pumping: A Guide to Successful Applications," Europump and Hydraulic Institute, 2004.
1014	August, R. et al., "Dynamics of Planetary Gear Trains," NASA Contractor Report 3793, June 1984 ("*August*").
1015	U.S. Patent Publication No. 2016-03690609 to Morris *et al.*, "Mobile Fracturing Pump Transport for Hydraulic Fracturing of Subsurface Geological Formations" ("*Morris*"), filed August 31, 2016, and published December 22, 2016.
1016	United States Patent No. 6,907,667 to Joyner *et al*., "Method for Facilitating the Assembly of a Universal Joint" ("*Joyner*"), filed October 14, 2002, and granted June 21, 2005.

Exhibit No.	Description
1017	Karassik, Igor J., et al., "Pump Handbook," McGraw-Hill, 2008 ("*Karassik*").
1018	Plaintiffs' Amended Complaint, *U.S. Well Services, LLC et al. v. Liberty Energy, Inc. et al.*, No. 4:24-cv-00839 (S.D. Tex. June 3, 2024)
1019	Plaintiff's Motion for Leave to File the Second Amended Complaint, *U.S. Well Services, LLC et al. v. Liberty Energy, Inc. et al.*, No. 4:24- cv-00839 (S.D. Tex. Sept. 19, 2024)
1020	*Interim Procedure for Discretionary Denials in AIA Post-Grant Proceedings with Parallel District Court Litigation* (June 21, 2022)
1021	Federal Court Management Statistics (June 30, 2024), *available at* <https://www.uscourts.gov/sites/default/files/data_tables/fcms_na_ap pprofile0630.2024.pdf>
1022	Declaration of Sylvia Hall-Ellis, Ph.D.
1023	Claim Listing for Claims of '533 Patent
1024	Morton, M., "Unlocking the Earth: A Short History of Hydraulic Fracturing," GEO ExPro, Vol. 10, No. 6, December 2013 (https://geoexpro.com/unlocking-the-earth-a-short-history-of-hydraulic-fracturing/) (last accessed September 16, 2024).
1025	Wells, B.A., Wells, K.L, "Shooters – A "Fracking" History," American Oil & Gas Historical Society, https://aoghs.org/technology/hydraulic-fracturing (last updated March 7, 2024).
1026	Montgomery, Carl T., Smith, Michael B., "Hydraulic Fracturing, a History of an Enduring Technology," Journal of Petroleum Technology 62 (12), December 2010.
1027	Bourgoyne, Adam T. Jr., et al., "Applied Drilling Engineering," Society of Petroleum Engineering Textbook Series, Volume 2, 1986.
1028	Vasilliou, Marius S., "Historical Dictionary of the Petroleum Industry," Second Edition, Rowman & Littlefield, 2018.

Exhibit No.	Description
1029	U.S. Patent Publication No. 2013/0306322 to Sanborn et al., titled "System and Process for Extracting Oil and Gas by Hydraulic Fracturing," filed December 7, 2012, and published November 21, 2013.
1030	U.S. Patent Publication No. 2012/0255734 to Coli et al., titled "Mobile, Modular, Electrically Powered System for Use in Fracturing Underground Formations," filed April 6, 2012, and published October 11, 2012.
1031	Gardner Denver GD-2500 Quintuplex Well Servicing Pump Operating and Service Manual, captured by the Internet Archive on September 17, 2005, available at <https://web.archive.org/web/20120917102614/http:/www.quincieoilfield.com/pdf/3.0%20Gardner%20Denver/2500/GD2500Q%20Op%20 &%20Service%20Manual.pdf>.
1032	Merriam-Webster Online Dictionary, "Quintuple," captured by the Internet Archive on February 2, 2017, available at <https://web.archive.org/web/20170202121725/https://www.merriam-webster.com/dictionary/quintuple>.
1033	Mark's Standard Handbook for Mechanical Engineers, Eleventh Edition, McGraw-Hill Companies, New York, 2007.
1034	Nesbitt, B., "Handbook of Pumps and Pumping: Pumping Manual International," Elsevier, 2006.
1035	Langewis, Jr., C. and Gleeson, C. W., "Practical Hydraulics of Positive Displacement Pumps for High-Pressure Waterflood Installations," Society of Petroleum Engineers, February 1971.
1036	Lewis, M. J. T., "Gearing in the ancient world," Pergamon Press Ltd. 1993.
1037	Mabie, H. H., Reinholz, C. F., "Mechanics and Dynamics of Machinery" (4th ed. 1987), John Wiley & Sons.
1038	Pawar, P. V. and Kulkarni, P. R., "Design of two stage planetary gear train for high reduction ratio," *International Journal of Research in Engineering and Technology*, vol. 4, no. 6, pp. 150-157, June 2015.

Exhibit No.	Description
1039	Camara, John A., "Electrical Engineering Reference Manual for the Electrical and Computer PE Exam," 6th ed. (Professional Publications, Inc. 2002), ISBN: 1-888577-56-8.
1040	Fink, Donald G., STANDARD HANDBOOK FOR ELECTRICAL ENGINEERS, 13th ed. (McGraw-Hill, New York: 1993), ISBN: 0-07-020984-7.
1041	U.S. Patent Publication No. 2011/0241590 to Horikoshi et al., titled "Motor Driving Apparatus Having Fault Diagnostic Function," filed February 11, 2011, and published October 6, 2011.
1042	Roethemeyer, Dale E., Yankaskas, David R., "Evolution of Motor and Variable Frequency Drive Technology," in *ACEEE Summer Study Proceedings on Energy Efficiency in Industry*, 1995, pp. 541-552.
1043	U.S. Patent No. 3,186,222 to Martin, "Well Signaling System," filed July 28, 1960, and issued June 1, 1965.
1044	U.S. Patent No. 3,075,136 to Jones, "Variable Pulse Width Parallel Inverters," filed August 31, 1961, and issued January 22, 1963.
1045	U.S. Patent No. 3,262,036 to Clarke et al, "Means for Smoothly Varying the Speed of a Star-Connected Polyphase Induction Motor," filed September 19, 1962, and issued July 19, 1966.
1046	Shepherd, William and Stanway, Jack, "Unbalanced Voltage Control of 3-Phase Loads by the Triggering of Silicon Controlled Rectifiers," *IEEE Transactions on Industry and General Applications*, no. 3, pp. 206-216, 1965.
1047	Hickok, H. N., "Adjustable Speed—A Tool for Saving Energy Losses in Pumps, Fans, Blowers, and Compressors," *IEEE Transactions on Industry Applications*, no. 1, pp. 124-136, 1985.
1048	DeWinter, Frank A. and Kedrosky, Brian J., "The Application of a 3500-hp Variable Frequency Drive for Pipeline Pump Control," in IEEE Transactions on Industry Applications, Vol. 25, No. 6, 1019-1024 1989.

Exhibit No.	Description
1049	Perrin, M., Kohn, G., Mugford, S., Seggewiss, G., "Induction Motors, Reciprocating Compressors and Variable Frequency Drives," *Record of Conference Papers. IEEE Industry Applications Society 44th Annual Petroleum and Chemical Industry Conference*, 15-17 Sept. 1997, pp. 1-9, doi: 10.1109/PCICON.1997.648162.
1050	Lockley, B., Wood, B., Paes, R., DeWinter, F., "IEEE Std 1566 - The Need for a Large Adjustable Speed Drive Standard," in *2006 Record of Conference Papers - IEEE Industry Applications Society 53rd Annual Petroleum and Chemical Industry Conference*, 11-15 Sept. 2006, pp. 1-10, doi: 10.1109/PCICON.2006.359687.
1051	Manz, L. B., "The motor designer's viewpoint of an adjustable speed drive specification," *IEEE Industry Applications Magazine*, vol. 1, no. 1, pp. 16-21, 1995.
1052	Baseer, M., "Electric Machines and Adjustable Speed Drives," in University of Bradford Electric and Telecommunications Research Seminar Series, 8th Workshop Proceedings, April 1, 2009, 131-134.
1053	U.S. Patent No. 9,410,410 to Broussard et al., titled "System for Pumping Hydraulic Fracturing Fluid using Electric Pumps," filed November 16, 2012, and issued August 9, 2016.
1054	Johns, Cort MacLean, "Industrial Revolutions: From Ctesibius to Mars," ABC Book Center, 2021.

4. In addition, I considered the following exhibits:

Exhibit No.	Description
2001	Dudley, Darle W., "*Gear Handbook,"* McGraw-Hill Book Co. ("Gear Handbook")
2002	Lynwander, Peter, "*Gear Drive Systems,"* Macrel Dekker, Inc., New York, 1983.

Exhibit No.	Description
2003	About AGMA – American Gear Manufacturers Association, available at https://www.agma.org/membership/about-agma/. ("About AGMA PDF")
2004	Member List – American Gear Manufacturers Association, available at https://www.agma.org/membership/member-list/. ("Member List -AGMA PDF")
2005	Gear Engineering 50+ Years Of Experience, United Gear, Inc., available at https://www.ugaco.com/gear-engineering/. ("United Gears PDF")
2006	Patent Case Scheduling Order, *U.S. Well Services, LLC, et al. v. Liberty Energy, Inc., et al.*, Dkt. 30, Case No. 4:24-cv-00839-KPE (S.D.Tex.).
2007	ZipRecruiter, "*What is a Gear Design Engineer and How to Become One,*" available at ziprecruter.com/career/Gear-Design-Engineer/What-Is-How-to-Become.
2008	proconpump (New Smyrna Beach): Gear Design Engineer, available at https://join.com/companies/proconpump/13469702-gear-design-engineer. ("Proconpump job")
2009	Weiss, Shannon, Mechanical Engineer-Gear Design & Automation, August 3, 2017, available at https://www.cgimotion.com/mechanical-engineer-gear-design-automation/. ("CGI job")
2010	Gear Design Engineer @ American Axle & Manufacturing-AAM | JobzMall, available at https://www.jobzmall.com/american-axle-manufacturing-aam/job/gear-design-engineer. ("American Axle job")
2011	PTO Classification Definitions Class 475, "Planetary Gear Transmission Systems or Components," February 2007.

Exhibit No.	Description
2012	Excerpts from D. T. Jelaska, "*Gears and Gear Drives*," John Wiley & Sons, 2012.
2013	Bachelor of Science in Electrical Engineering, Cullen College of Engineering, University of Houston. ("EE course requirements")
2014	Bachelor of Science in Petroleum Engineering, Cullen College of Engineering, University of Houston. ("Pet. Eng. course requirements")
2015	Bachelor of Science in Mechanical Engineering, Cullen College of Engineering, University of Houston. ("ME course requirements")
2016	Course Syllabus, MECE 4331 - Design of Machine Elements, Cullen College of Engineering, University of Houston.
2017	"*Welcome to PEM*," Power Engineering and Mfg. ("PEM").
2018	"*ITAMCO's Next Generation Gear Manufacturing Revolutionizes Fracking Efficiency in the Oil Industry*," Indiana Technology and Manufacturing Companies, January 29, 2024. ("website")
2019	Petitioner's invalidity contentions
2020	"Best-Practice Gearbox Lubrication," Gear Solutions Magazine, Jan. 1, 2010
2021	RESERVED
2022	"Fatigue Failure of a Helical Gear in a Gearbox," Engineering Failure Analysis, available at https://www.sciencedirect.com/science/article/abs/pii/S1350630705001780
2023	*Curriculum Vitae* of Michael Nikolaou

5. In forming my opinions expressed below, I have considered the documents listed immediately above and my knowledge and experience based on my work in this area as described below.

6. The earliest application that resulted in the issuance of the ’258 and ’533 patents was filed on December 5, 2017. EX-1001,[1] Cover; EX-1001 (’533 Patent, Cover). I understand Dr. Durham also assumed that the priority date for both the ’258 and the ’533 patents was December 5, 2017. EX-1003 (258 patent), ¶ 48; EX-1003 (533 patent), ¶ 49. I am familiar with the technology at issue and am aware of the state of the art around this time. It is my understanding that Petitioner’s expert––Dr. Robert Durham—has proposed the following qualifications for a person of ordinary skill in the art (“POSITA”) pertinent to the subject matter of the ’258 and ’533 patents: either (1) a Bachelor of Science in Mechanical Engineering, Electrical Engineering, Petroleum Engineering or an equivalent field as well as at least 2 years of academic or industry experience in the oil and gas industry, including well drilling, completion, or production, or (2) at least four years of industry experience in the oil and gas industry including well drilling, completion, or production. EX-

[1] All cites to EX-1001 used in my declaration refer to the ’258 patent unless I state otherwise. The ’533 patent is a continuation of the ’258 patent and contains the same cited disclosures.

1003 (258 patent), ¶ 48; EX-1003 (533 patent), ¶ 49. As of December 5, 2017, I would have qualified as a POSITA under these qualifications. My analysis and opinions below are given from the perspective of a POSITA in this technological field in the relevant time frame, unless stated otherwise.

II. Qualifications and Compensation

7. I am a Professor and Associate Chair of Chemical and Biomolecular Engineering in the Cullen College of Engineering at the University of Houston.

8. I graduated with a diploma in chemical engineering from the National Technical University in Athens, Greece, in 1984. I then earned a Ph.D. in chemical engineering at the University of California, Los Angeles, in 1989. Prior to coming to the University of Houston, I was an Assistant (and then Associate) Professor at Texas A&M University for eight years. After my promotion to Associate Professor and tenure at Texas A&M, I took a sabbatical leave as a Visiting Scientist at MIT. I have taught at the University of Houston for over 20 years.

9. In my role as a professor at the University of Houston I teach both undergraduate and graduate courses every year. At the undergraduate level, these courses include Analytical Methods for Chemical Engineers, Numerical Methods for Chemical Engineers, Plant Economics, Plant Design, Thermodynamics, Statistical Methods in Chemical Engineering, Statistical Quality Control Methods, and Chemical Process Control. At the graduate level, I teach Mathematical Methods in

U.S. Well - Exhibit 2024
Liberty v. U.S. Well - IPR2025-00066
Page 19 of 64

Chemical Engineering, Advanced Process Control, and Natural Gas Engineering. I also routinely advise both undergraduate and graduate (master and Ph.D.) students.

10. I have extensive experience in process systems engineering and mathematical modeling. My research interests are in computer-aided systems engineering, i.e., development and use of computer-based methods for the design, optimization, monitoring, and automatic control of various kinds of systems, in a diverse array of industries, including the oil and gas industry.

11. In my 30 years of academic and industrial consulting experience I have worked on problems in several industries, including the oil and gas industry and oil refining and petrochemicals. Much of my work tackles fundamental research issues and is described in numerous publications, as discussed below. A substantial portion of my work is directed to concrete solutions to problems faced by industrial partners and has resulted in specific commercial products (e.g., for Lam Research, https://www.lamresearch.com/), patents, and the formation (by the corresponding project's managers) of a small company that was eventually bought by Schlumberger, a major global oilfield services company (http://www.slb.com/services/drilling/drilling_services_systems/ directional_drilling/slider.aspx).

12. In addition to teaching, I have also served as a consultant for various oil and gas companies over the past 27 years, working with both major companies

U.S. Well - Exhibit 2024
Liberty v. U.S. Well - IPR2025-00066
Page 20 of 64

and smaller, independent companies, both "upstream" (i.e., oil and gas exploration and production) and "downstream" (oil and gas transportation, oil refining, and chemicals). I have consulted on a variety of matters for ENI, Schlumberger, WildHorse / RotoSlide, Synergy Fluid Services, XGas/EPT, IQPC Oil & Gas, Intelligent Agents Corporation, Landmark, ECOPETROL, Lam Research, Shell Global Solutions, Noble Drilling, AspenTech, General Electric, Simulation Sciences, Bryan Research & Engineering, Frito-Lay, Shell Development, and Union Pacific Resources.

13. I have published over 150 peer-reviewed publications in journals and conference proceedings in the area of computer-aided systems engineering. My publications focus on applications to the design, optimization, monitoring, and automatic control of various kinds of systems, in oil and gas, oil refining and petrochemicals, snack food production, semiconductor manufacturing, and development and administration of antibiotics against resistant infections. Three of my refereed journal publications have been featured on the cover of high-impact journals (*AIChE Journal*, 2011; *IEEE Control Systems Magazine*, 2006; *PLoS Computational Biology*, 2011).

14. I have also presented my work as a speaker at numerous academic conferences, whether in regular sessions, invited sessions, or as a keynote speaker. As an example, I have been invited twice (in 1996 and 2011) to give presentations

U.S. Well - Exhibit 2024
Liberty v. U.S. Well - IPR2025-00066
Page 21 of 64

in the flagship conference on Chemical Process Control, held every five years (CPC-V and CPC-VIII), and was a keynote speaker at the 2017 International Petroleum & Petrochemical Technology Conference (IPPTC) in Beijing, China. I have also published five book chapters on various aspects of computer-aided systems engineering. Finally, I serve regularly as a peer reviewer at several major engineering and scientific journals (including *Automatica, PLoS, AIChE Journal, SPE Journal, Journal of Process Control, Computers & Chemical Engineering*) as well as at federal and international funding agencies, including National Science Foundation (NSF), Petroleum Research Fund (PRF), National Institutes of Health (NIH), and the Qatar National Research Fund (QNRF).

15. I am a member of the American Institute of Chemical Engineers, the Society of Petroleum Engineers, and Omega Chi Epsilon. I serve as a co-organizer or co-chair of several major international conferences, including the AIChE Annual Meeting and the AIChE Spring Meeting.

16. I have received numerous teaching awards from both Texas A&M and University of Houston, including the Dow Excellence in Teaching Award, and the Cullen College of Engineering Teaching Award. I have also been named a Top Reviewer by *Automatica*, and, in 2007, I received the Computing & Systems Technology (CAST) Directors Award from the American Institute of Chemical Engineering. In 2017, I received the Abraham E. Dukler Distinguished Engineering

Faculty Award at the University of Houston, which is given to a faculty that has made significant contributions to society and whose accomplishments and careers have brought credit to the University of Houston Cullen College of Engineering. In 2019, I received the Fluor Corp. Faculty Excellence Award at the Cullen College of Engineering. This award is the highest distinction bestowed to faculty of this college.

17. My *Curriculum Vitae*, which includes a complete list of my publications, is included as EX-2023.

18. I have previously given testimony in the following cases:

a) *Eurecat United States, Inc. v. Soren Marklund, Douglas Wene, and Chem 32 LLC*, Trial Ct. Cause No. 2012-5700, Harris Cty. Ct. (Tex.).

b) *TDE Petroleum Data Solutions, Inc. v. AKM Enterprise, Inc. DBA Moblize, Inc.*, Case No. 4:15-cv-01821 (S.D. TEX-2015).

c) *Arrona et al. v. Bluestone Natural Resources, LLC*, Case No. 4:15-cv-02680 (S.D. TEX-2017).

d) *Sunoco Partners Marketing & Terminals L.P. v. Powder Springs Logistics, LLC, et al.*, Case No. 1:17-cv-01390 (D. Del. 2017).

e) *Magellan Midstream Partners L.P. v. Sunoco Partners Marketing & Terminals*, Case No. IPR2019-00024 (U.S. Patent No. 9,494,948).

f) *Magellan Midstream Partners L.P. v. Sunoco Partners Marketing & Terminals*, Case No. IPR2019-00025 (U.S. Patent No. 9,606,548).

g) *ProFrac Holdings Corp. et al. v. Halliburton Energy Services, Inc.,* Case No. IPR2023-01318 (U.S. Patent no. 7,931,082)

h) *ProFrac Holdings Corp. et al. v. Halliburton Energy Services, Inc.,* Case No. IPR2023-01319 (U.S. Patent no. 7,841,394)

i) *ProFrac Holdings Corp. et al. v. Halliburton Energy Services, Inc.,* Case No. PGR2023-000023 (U.S. Patent no. 11,373,058)

j) *Halliburton Energy Services, Inc. v. ProFrac Holdings Corp. et al.,* Case No. IPR2023-00558 (U.S. Patent no. 11,136,870).

19. I am being compensated in this matter at my standard consulting hourly rate of $700 per hour. My compensation is not dependent on the substance of my statements in this declaration.

20. I am over the age of 18 and am competent to write this declaration. I have personal knowledge, or have developed knowledge, of the technologies discussed in this declaration based upon my education, training, or experience with the matters discussed herein. It is my opinion that, in accordance with the above, I am qualified to provide opinions from the perspective of a POSITA.

III. Relevant Legal Standards

A. Obviousness

21. I understand that obviousness is analyzed from the perspective of a POSITA at the time of the alleged invention. I also understand that a POSITA is

presumed to have been aware of all pertinent prior art at the time of the alleged invention.

22. I understand that an obviousness analysis involves comparing a claim to the prior art to determine whether the claimed invention as a whole would have been obvious to a POSITA in view of the prior art and in light of the general knowledge of the art at the time the invention was made. I also understand that the invention may be deemed obvious when a POSITA would have reached the claimed invention through routine experimentation.

23. I understand that obviousness can be established by combining or modifying the disclosures of the prior art to achieve the claimed invention. It is also my understanding that where there is a reason to modify or combine the prior art to achieve the claimed invention, there must also be a reasonable expectation of success in so doing to render the claimed invention obvious. I understand that the reason to combine prior art references can come from a variety of sources, not just the prior art itself or the specific problem the patentee was trying to solve. I also understand that the references themselves need not provide a specific hint or suggestion of the alteration needed to arrive at the claimed invention; the analysis may include recourse to logic, judgment, and common sense available to a POSITA.

24. I understand that when there is some recognized reason to solve a problem, and there are a finite number of identified, predictable solutions, a POSITA

has good reason to pursue the known options within his or her technical grasp. If such an approach leads to the anticipated success, it is likely the product not of innovation but of ordinary skill and common sense. In such a circumstance, when a patent simply arranges old elements with each performing the same function it had been known to perform and yields no more than one would expect from such an arrangement, the combination is obvious.

25. I understand that when considering the obviousness of an invention, one should also consider whether there are any objective indicia that support the non-obviousness of the invention. I further understand that objective indicia of non-obviousness, also known as "secondary considerations," include failure of others, copying, unexpected results, information that "teaches away" from the claimed subject matter, perception in the industry, commercial success, and long-felt but unmet need. I also understand that for objective indicia of non-obviousness to be applicable, the indicia must have some sort of nexus to the subject matter in the claim that was not known in the art. I understand that this nexus includes a factual connection between the patentable subject matter of the claim and the objective indicia alleged. I also understand that an independently made invention that is made within a comparatively short period is evidence that the claimed invention was the product of ordinary skill.

26. Finally, I understand that patent examiners at the U.S. Patent and Trademark Office ("PTO") rely upon certain exemplary rationales in reviewing patent applications to understand whether the subject matter of the claims is obvious. I understand that the following is the list of exemplary rationales relied upon by patent examiners at the PTO: (i) combining prior art elements according to known methods to yield predictable results; (ii) simple substitution of one known element for another to obtain predictable results; (iii) use of a known technique to improve similar devices (methods, or products) in the same way; (iv) applying a known technique to a known device (method, or product) ready for improvement to yield predictable results; (v) "obvious to try"—choosing from a finite number of identified, predictable solutions, with a reasonable expectation of success; and (vi) known work in one field of endeavor may prompt variations of it for use in either the same field or a different one based on design incentives or other market forces if the variations are predictable to one of ordinary skill in the art.

B. Construing the Meaning of Claim Terms

27. I understand that an *inter partes* review ("IPR") is a proceeding before the PTO for evaluating the validity of issued patent claims. I understand that in an IPR, a claim term is interpreted in a manner consistent with the standard used in patent litigation, as set forth in a case known as *Phillips v. AWH Corp.*, 415 F.3d 1303 (Fed. Cir. 2005) (en banc). That standard generally construes the claims

according to their "ordinary and customary" meaning in view of the claim language, specification, file history, and, where applicable, relevant other evidence.

28. I understand that a patent's "specification" includes all the figures, written descriptions, and claims within the patent. I understand that the PTO will look to the specification and prosecution history to see whether there is a definition for a given claim term and, if not, will apply the ordinary and customary meaning from the perspective of a POSITA at the time in which the alleged invention was made.

29. As discussed above and detailed in my curriculum vitae, I was very familiar with hydraulic fracturing processes at both the individual well and oil-field level, as well as control systems for such processes and well treatment methods, technologies and was aware of the state of the art as of the earliest claimed priority date of the 258 and 533 patents. I believe that I would qualify as understanding the knowledge and skill of a POSITA as of November 16, 2012, and I have a sufficient level of knowledge, experience, and expertise to provide an expert opinion in the field of the 258 and 533 patents.

IV. Background of the Technology

30. The following paragraphs regarding hydraulic fracturing are based on the '258 patent. They apply equally to the '533 patent. For purposes of this

declaration, I have been asked to assume that the earliest priority date of the ’258 patent is December 5, 2017.

V. Challenged Patents

31. In this Section, I consider the disclosure of both the ’258 patent and the ’533 patent along with relevant information from the prosecution history of both patents.

A. Background

32. Both the ’258 and ’533 Patents are directed to hydraulic fracturing (fracking) in oil and gas wells, which entails pumping fluid into underground formations at high pressure using a multi-plunger pump configured to pressurize a fracturing fluid and injecting it into a wellhead for fracturing the subterranean formation. EX-1001, Abstract. Pumping operations typically involve diesel-powered pumps containing transmissions that have multiple speeds, and these pumps work together for pressurizing fluid for delivery down a wellbore. *Id.*, 1:37–40. When a pump goes offline because of failure or maintenance, the speed of the remaining operational pumps must be increased to compensate. *Id.*, 1:40–43. But many top gears in these diesel transmissions provide speeds above the critical speed for associated plunger pumps, often resulting in damage to the pumps caused by cavitation and/or damage accumulation to the fluid end of the pump. *Id.*, 1:46–49, 1:62–65.

U.S. Well - Exhibit 2024
Liberty v. U.S. Well - IPR2025-00066
Page 29 of 64

33. To overcome this, the ’258 and ’533 patents both teach a novel system and method of pumping fluid into a wellbore using a multi-plunger pump powered by multiple electric or hydraulic motors (230) coupled to a “planetary gear train [200]” with “input pinion gears [235] in rotational contact” with the motors, as shown in Figure 2 and reproduced below. *Id.*, 2:46–57, Fig. 2. They further teach using a gear ratio of the planetary gear train to select the operational speed of each motor using a “variable frequency drive (VFD)” to limit the maximum pump speed of the multi-plunger pump, preventing pump damage and increasing pump reliability. *Id.*, 2:57–60, 3:16–27. To achieve this capability, each of the ’258 and ’533 Patents teach that its planetary gear train includes speed reduction gearboxes (245) positioned between the input pinion gears and the motors to achieve a desired pump rate. *Id.*, 2:61–64.

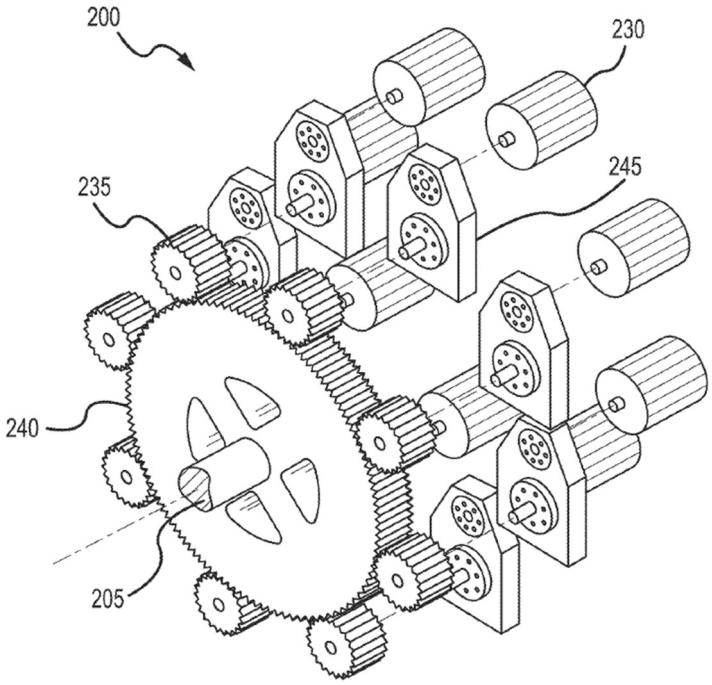

<u>’258 Patent, Fig. 2 (EX-1001)</u>

1. The Prosecution History

34. For the 258 Patent, the Examiner allowed the challenged claims over the prior art of record because the prior art of record did not disclose or suggest the claims as modified in the Applicant’s October 3, 2019 office action response. *See* EX-1002 (’258 Patent), 98–107. Specifically, the claims were distinguished from the prior art because the prior art failed to disclose “a plurality of motors positioned to

simultaneously power the multi-plunger pump."[2] EX-1002, 99–103 (emphasis added).

35. The '533 Patent is a continuation of the 258 patent and thus shares its prosecution history above. In prosecuting the '533 patent, the Examiner initially rejected the claims over Buckley and Bergan, EX-1002, 157, among other references including Norris (EX-1002, 162), Rosman (EX-1002, 165), and Mail, (EX-1002, 170). The Examiner also issued a nonstatutory double patenting rejection with the 258 patent. EX-1002, 174. The Examiner, however, noted that claim 30 "would be allowable if rewritten in independent form." EX-1002, 174. Claim 30 depended on claim 29 and recited limitations further narrowing the claimed planetary gear system:

[2] The Examiner allowed Claims 1–20 (EX-1002, 62) after Applicant added a "simultaneously" limitation to independent claims 1, 11, and 15 to overcome previous Examiner rejections under 35 U.S.C. § 103 as being "unpatentable over Hemandez et al. (US 2017/0051732) in view of Rosman (US 4,100,822)." EX-1002, 115–127.

U.S. Well - Exhibit 2024
Liberty v. U.S. Well - IPR2025-00066
Page 32 of 64

29. (New) The hydraulic fracturing system of claim 28, wherein the planetary gear train comprises:

a sun gear connected to the main gear by a shaft extending from the main gear; and

a plurality of planetary gears that each contact the sun gear and the final drive gear, wherein each of the plurality of planetary gears comprises external gear teeth that mate with external gear teeth of the sun gear and with internal gear teeth of the final drive gear.

30. (New) The hydraulic fracturing system of claim 29, wherein a final drive gear is connected to the pump crankshaft by a plurality of arms extending from the final drive gear.

<u>'533 Prosecution History, 470 (EX-1002)</u>

36. In response, the applicant incorporated the limitations from claim 30 into the independent claims. For example, claim 21 was amended to include the limitation from claim 30, shown below:

21. (Currently Amended) A hydraulic fracturing system for fracturing a subterranean formation, the hydraulic fracturing system comprising:

a multi-plunger hydraulic fracturing pump configured to pump fluid to a wellbore associated with the subterranean formation, the multi-plunger hydraulic fracturing pump comprising a pump crankshaft;

a plurality of motors positioned to power the multi-plunger hydraulic fracturing pump; and

a planetary gear train positioned to translate power from the plurality of motors to the pump crankshaft of the multi-plunger hydraulic fracturing pump, the planetary gear train comprising:

a plurality of input pinion gears connected to the plurality of motors; and

a final drive gear connected to the pump crankshaft of the multi-plunger hydraulic fracturing pump <u>by a plurality of arms extending from the final drive gear</u>.

<u>'533 Prosecution History, 140 (EX-1002)</u>

37. The Examiner, in response, issued a notice of allowance. EX-1002 ('533 Patent), 105–107.

2. The Challenged Claims

38. I understand that for purposes of this proceedings, Petitioner is challenging the validity of claims 1–20 of the '258 patent.

39. Claim 1 of the '258 patent is representative of the challenged claims and shown below:

> 1. A hydraulic fracturing system for fracturing a subterranean formation comprising:
>
> a multi-plunger hydraulic fracturing pump fluidly connected to a well associated with the subterranean formation, the multi-plunger pump configured to pump fluid into a wellbore associated with the well at a high pressure so that the fluid passes from the wellbore into the subterranean formation and fractures the subterranean formation;
>
> a plurality of motors positioned to simultaneously power the multi-plunger pump; and
>
> a planetary gear train having a plurality of input pinion gears in rotational contact with each of the plurality of motors,
>
> wherein a gear ratio of the planetary gear train and a speed at which the plurality of motors operates are selected so as to limit a maximum pump speed associated with the multi-plunger pump.

EX-1001 ('258 Patent), claim 1.

40. I understand that for purposes of this proceedings, Petitioner is challenging the validity of claims 1–25 of the ’533 patent.

41. Claim 1 of the ’533 patent is representative and shown below:

> 1. A hydraulic fracturing system for fracturing a subterranean formation, the hydraulic fracturing system comprising:
>
> a multi-plunger hydraulic fracturing pump configured to pump fluid to a wellbore associated with the subterranean formation, the multi-plunger hydraulic fracturing pump comprising a pump crankshaft;
>
> a plurality of motors positioned to power the multi-plunger hydraulic fracturing pump; and
>
> a planetary gear train positioned to translate power from the plurality of motors to the pump crankshaft of the multi-plunger hydraulic fracturing pump, the planetary gear train comprising:
>
> a plurality of input pinion gears connected to the plurality of motors; and
>
> a final drive gear connected to the pump crankshaft of the multi-plunger hydraulic fracturing pump by a plurality of arms extending from the final drive gear.

EX-1001 (’533 Patent), claim 1.

VI. Claim Construction

42. For purposes of this declaration, I will apply the plain and ordinary meaning for every term to all terms. However, I reserve the right to supplement my opinions if Dr. Durham or Petitioner offers a construction of any term in the ’258 or

’533 patents, or if the Board decides to apply a construction of any term in the ’258 or ’533 patents.

VII. Asserted Prior Art

A. *Buckley* (EX-1004 and EX-1005)

43. I understand that Dr. Durham relies on cited passages from both Buckley’s non-provisional (EX-1004) and his provisional application (EX-1005). I summarize each below.

1. *Buckley* (EX-1005)

44. Buckley is directed to an “electric drive pump system” that includes a “power end” and a “detachable transmission assembly.” EX-1004, Abstract. Buckley’s transmission assembly is mounted to the power end (103) as shown in Figure 2 and reproduced below.

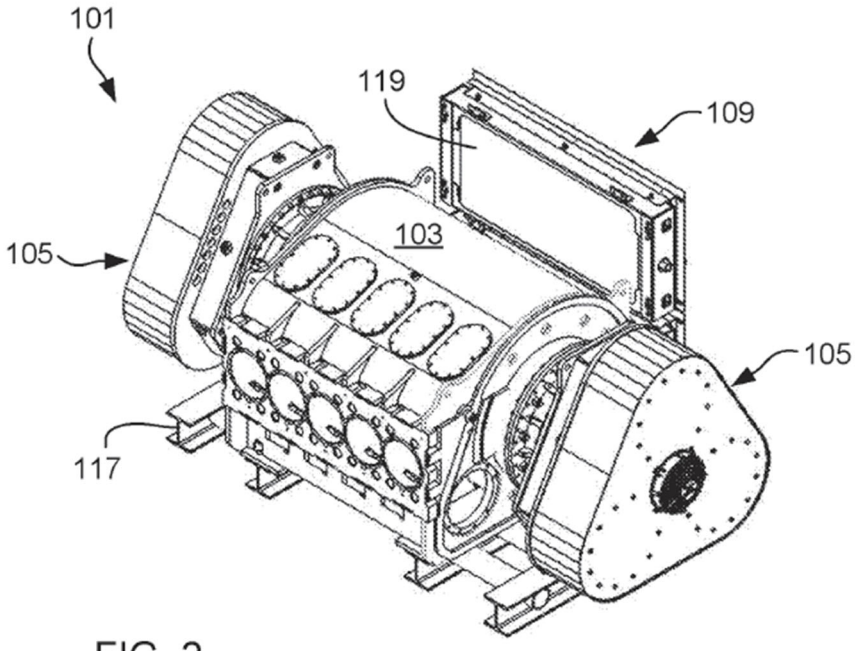

FIG. 2

Buckley, Fig. 2 (EX-1004)

45. Buckley's transmission assembly is mounted to the power end, and it provides "rotational power" to the power end using multiple electric motors. *Id.* The electric motors use a gearbox to drive an "output spline" that connects to the power end. *Id.* Buckley explains that the motors (111) within transmission assembly (105) are "arranged in a radial manner about output spline" as shown in Figure 9 and reproduced below. *Id.*, [0052], Fig. 9.

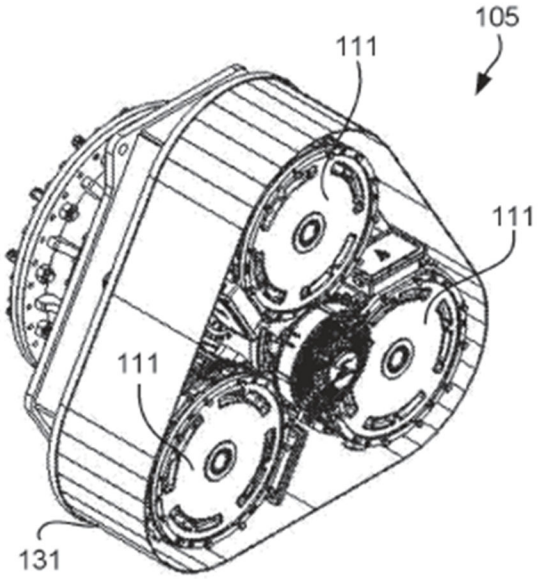

FIG. 9

Buckley, Fig. 9 (EX-1004)

2. Buckley Provisional (EX-1005)

46. The Buckley Provisional is directed to an electric pump "configured to incorporate a plurality of electric motors to the power end or pump portion of a pump system" as shown in Figure 2 and reproduced below. EX-1005, 4, Fig. 2. The

Buckley Provisional explains that its motors are "configured to operate independently to vary the power supplied" to the pump, without specifying any certain motor arrangement. *Id.* The Buckley Provisional also explains that "[s]elected gearing may be used to assist in mating the electric motors to the power end" and that the gears "can be mounted at both ends of the pump," though no specific gearing configuration is illustrated or specified so long as the chosen configuration permits the motors "to convey energy so as to operate the power end." *Id.*, 5. The Buckley Provisional's motors are "independently operable" such that, during operation, "some motors may be on while other[s] are off," depending on power output requirements. *Id.*, 5–6.

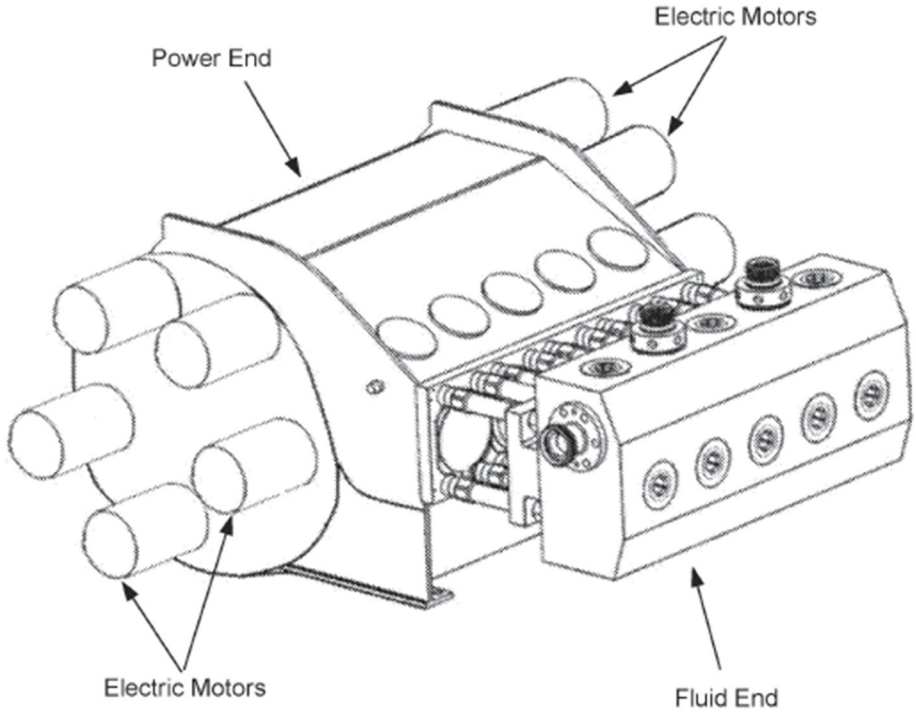

FIG. 2

Buckley Provisional, Fig. 2 (EX-1005)

B. *Bergan* (EX-1006)

47. U.S. Patent Application Publication No. 2015/0361736 to Bergan et al. ("Bergan") is titled "Heave compensation winches" and was filed June 13, 2014. Bergan is directed to a hoisting system with drawworks or winches that include compensation functions for use in floating drilling platforms such as offshore drilling operations. EX-1006, [0003], [0007]. Bergan aims to solve disruptions created when offshore platforms "vertically rise and fall (i.e., heave) with waves in the water" by using active compensation functions to "compensate for [the] heaving motion of the floating vessel [] from wave action at the surface of the water." *Id.*, [0003], [0024]. Bergan's active compensation function "detect[s] the heave of the vessel" and "uses the measured heave to actively compensate for heaving through control of the drawworks." *Id.*, [0026]. Drawworks control is implemented using a controller that that "send[s] command signals to motors of the drawworks [] that control rotation of [a] drum." *Id.* A passive heave-compensation system is also implemented that does not require external power and includes "one or more hydraulic devices (e.g., hydraulic cylinders or hydraulic motors) that passively store and release energy from the heaving motion of the vessel [] to move the load [] with respect to the drill floor to reduce the deviation of the load [] from its position with respect to the seadbed." *Id.*, [0027]. Figure 2, reproduced below, illustrates Bergan's winch system in which

"[m]otors 78 can be operated to drive rotation of the drum 74 to reel in or reel out the hoisting lines 20 to raise and lower an attached load," and that "the motors are [also] actively controlled to compensate for heave." *Id.*, [0030]. Bergan further explains that a "planetary gear system of the winch 72" connects the electric motors to the load and allows the electric motors to drive rotation of the drum to raise or lower the load. *Id.*, [0031]–[0032].

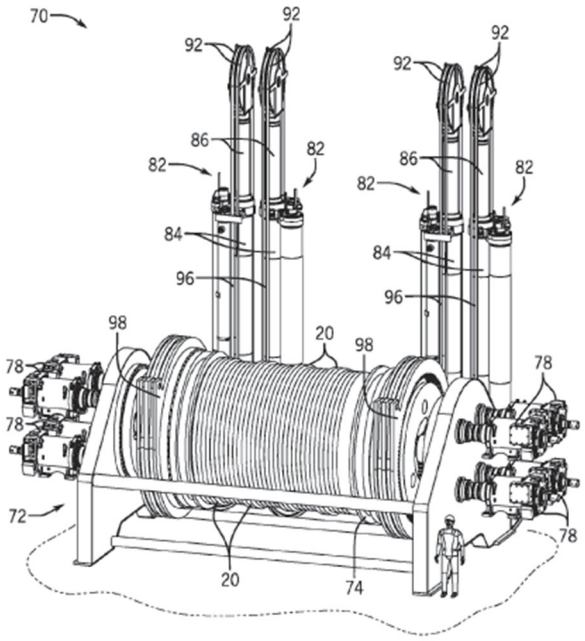

FIG. 3

Bergan, Fig. 3 (EX-1006)

C. *Rosman* (EX-1007)

48. U.S. Patent No. 4,100,822 to Allan Rosman ("Rosman") is titled "Drive System for a moving mechanism" and was filed April 19, 1976. Rosman is directed to a drive system for a chair lift or gondola to go up a mountain. *See* EX-1007, Figs. 11, 14, 17. Rosman's drive system (10), as shown in Figure 1 and reproduced below, consists of an "inner annular or ring member 11" equipped with gear teeth. EX-1007, 3:62–66. Rosman explains that ring member 11 is "rotatably disposed within the outer fixed annular member 13." *Id.*, 3:68–4:2. Rosman's drive system further includes multiple "drive motors 12" that include a pinion with gear teeth that "mesh with the gear teeth of annular member 11." *Id.*, 3:66–68. Drive motors 12 operate simultaneously to "rotate the annular member [11] about an axis of rotation." *Id.*, Abstract.

U.S. Well - Exhibit 2024
Liberty v. U.S. Well - IPR2025-00066
Page 41 of 64

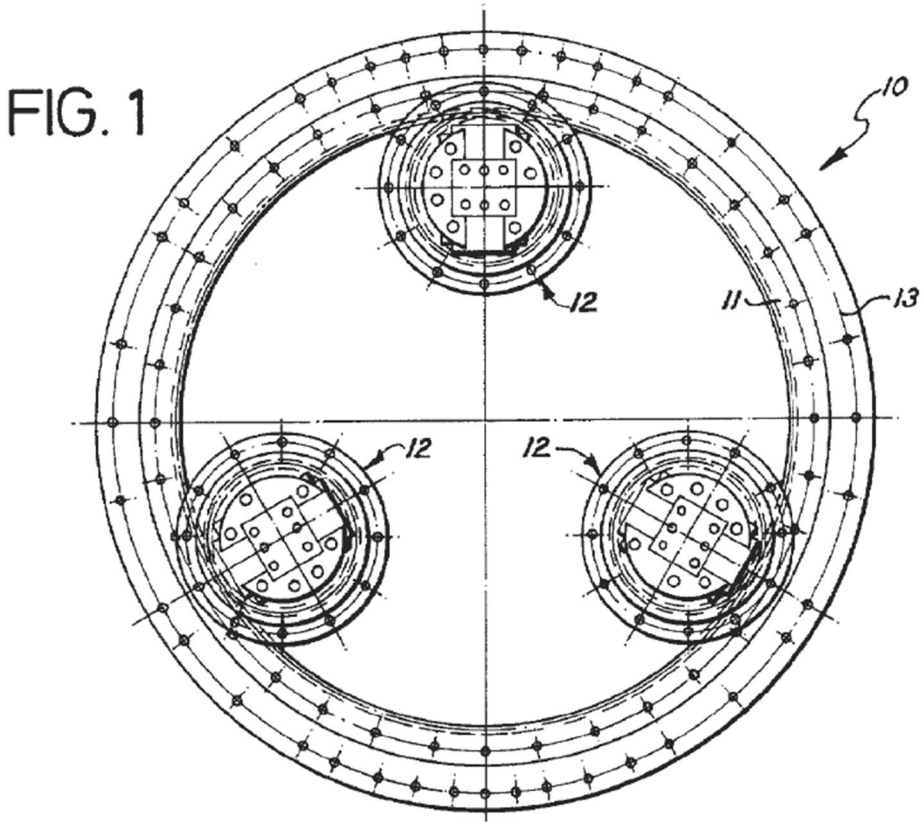

Rosman, Fig. 7 (EX-1007)

D. *Payne* (EX-1008)

49. U.S. Patent Application Publication No. 2016/0258267 to Payne et al. ("Payne") is titled "Well fracturing systems with electrical motors and methods of use" and was filed on March 3, 2016. Payne is directed to a "system for stimulating oil or gas production from a wellbore." EX-1008, [0014]. Payne's system includes a "hydraulic fracturing pump unit" that includes multiple fluid pumps "driven by an alternating current (AC) electrical pump motor" controlled by a "variable frequency drive (VFD)." *Id.*, [0014]. Payne's system further includes a "hydraulic fracturing

pump unit controller" that is configured to control the hydraulic-fracturing pump. *Id.*, [0016].

E. *Yi* (EX-1010)

50. Chinese Patent Application Publication No. 103742382 to Xiaogang Yi ("Yi") is titled "Fracturing pump transmission system and fracturing truck" and was filed December 30, 2013. Yi is directed to a "fracturing pump transmission system" that includes "one or more engines, multiple oil pumps, and multiple motors." EX-1010, [0007], [0008]. Yi's system includes a "crankshaft-type plunger pump [5]" in which both ends of the pump are "equipped with power input gears [51]," as illustrated in Figure 2 and reproduced below. *Id.*, [0010], Fig. 2. Yi explains that each motor (4) "engages with the power input gears through a power output gear [41]." *Id.*

51. Yi is directed to a "fracturing pump transmission system" that includes "one or more engines, multiple oil pumps, and multiple motors." EX-1010, [0007], [0008]. Yi's system includes a "crankshaft-type plunger pump [5]" in which both ends of the pump are "equipped with power input gears [51]," as illustrated in Figure 2 and reproduced below. *Id.*, [0010], Fig. 2. Yi explains that each motor (4) "engages with the power input gears through a power output gear [41]." *Id.*

U.S. Well - Exhibit 2024
Liberty v. U.S. Well - IPR2025-00066
Page 43 of 64

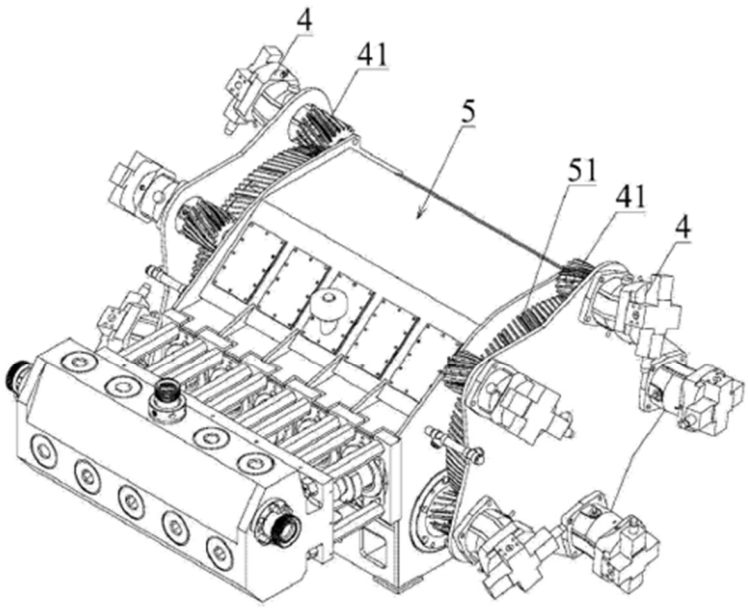

Figure 2

Yi, Fig. 2 (EX-1010)

F. *Jelaska* (EX-1012 and EX-2012)

52. Jelaska is a textbook titled *Gears and Gear Drives*. Jelaska describes multiple gear systems, the mathematical systems underlying their operation, their applications, and the pros and cons of each gear system depending on the application. *See generally* EX-1012. For example, Jelaska describes planetary gear systems and their relative shortcomings. These shortcomings include (1) increased complexity when compared to ordinary gear drives (EX-2012, 341); (2) more frequent lubrication requirements due to smaller gear dimensions that accept less lubrication

U.S. Well - Exhibit 2024
Liberty v. U.S. Well - IPR2025-00066
Page 44 of 64

per application (*Id.*, 341); and (3) more challenging lubrication tasks, especially at high speeds (*Id.*, 382).

G. *Tutterow* (EX-1013)

53. Tutterow is a textbook titled "Variable Speed Pumping, A Guide to Successful Applications." Tutterow describes considerations for designing and operating variable-speed pumping systems. *See generally* EX-1013. Tutterow further includes implementation strategies for improving reliability, diagnostics, and system control while lowering energy consumption, maintenance costs, and life cycle costs. *Id.* Tutterow explains that there are multiple ways to control pump performance, and that "the most appropriate approach" should be chosen according to "cost benefits of different control methods" to meet design needs while "minimiz[ing] life cycle costs." *Id.*, 34.

H. Asserted Prior Art Specific to '258 Patent

1. *Nesbitt* (EX-1014)

54. Nesbitt is a textbook titled "Handbook of Pumps and Pumping." Nesbitt is a textbook that describes various types of pumps and pumping systems, including design considerations to evaluate when selecting a pump for a given usage. *See generally* EX-1014. Nesbitt also describes the various properties and flow characteristics of liquids that should be considered during pump selection. *Id.*, 55–125. Finally, Nesbitt describes plunger-pump technology, common failure points, and the latest developments in plunger-pump technology. *Id.*, 73.

U.S. Well - Exhibit 2024
Liberty v. U.S. Well - IPR2025-00066
Page 45 of 64

I. Asserted Prior Art Specific to ’533 Patent

1. *August* (EX-1014)

55. August discusses a “star drive” configuration as shown in Fig. B-1 and reproduced below, which has a “fixed carrier” to prevent relative motion from being introduced in the gear train. EX-1014, 154, Fig. B-1. August explains that in this arrangement, “pitch line velocities” are equal to “velocities of engagement” such that “absolute angular velocity of the input gear is equal to the actual given input angular velocity.” *Id.*, 154. August further explains that calculation of equivalent input velocities is unnecessary since its star drive is a “conventional” gear train configuration. *Id*.

U.S. Well - Exhibit 2024
Liberty v. U.S. Well - IPR2025-00066
Page 46 of 64

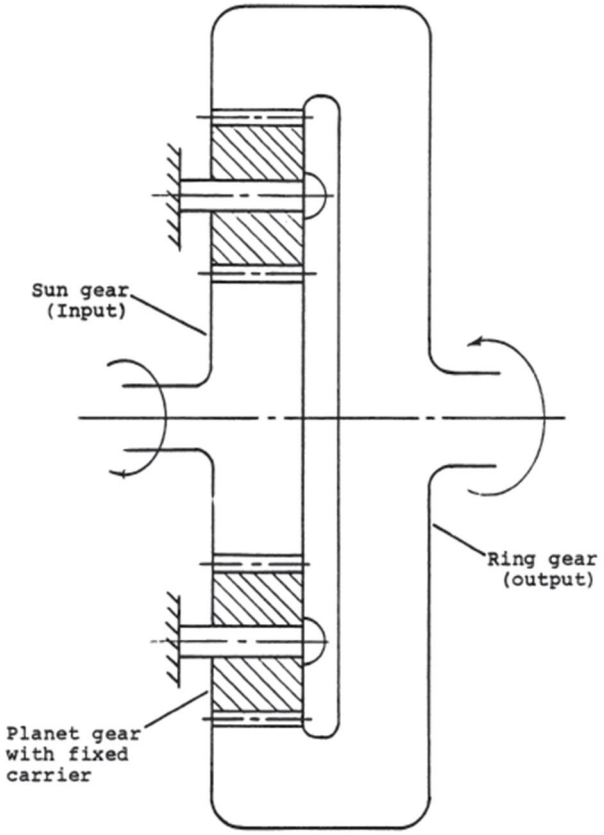

Figure B-1 - Star Arrangement

August, Fig. B-1 (EX-1014).

2. *Morris* (EX-1015)

56. Morris is directed to a "fracturing pump transport" comprising two fracturing pumps coupled on opposite sides of a "dual shaft electric motor." EX-1015, Abstract. Morris explains that each pump may be engaged or disengaged from a "prime mover" (i.e., electric motor) using a "drive line assembly" (1400) as shown in Figure 14B and reproduced below. *Id*., [0092], Fig. 14B. Morris further explains

that manual or remote instructions may be sent to switch "engagement coupling" (1410) to an engaged position or disengaged position (shown in Fig. 14B) to control pump operation. *Id*.

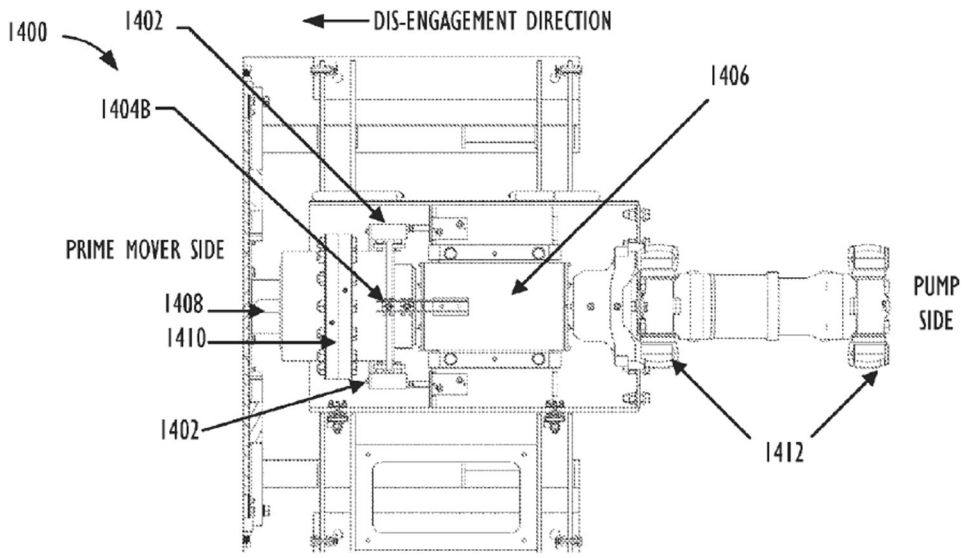

FIG. 14B

Morris, Fig. 14B (EX-1015).

3. *Joyner* (EX-1016)

57. Joyner is directed to a method of assembling components of a universal joint (10) that includes a "cross" (15) with a central body portion that has four "cylindrical trunnions (15a) that extend outwardly as shown in Figure 1 and reproduced below. EX-1016, 3:19–22, Fig. 1. Joyner explains that two of the trunnions are adapted to be received in openings 13a and 14a of arms 13 and 14 of the "yoke" (11). *Id.*, 3:25–27. Joyner further explains that the assembly also includes hollow and cylindrical "Bearing cups" (16) that fit within openings 13a and 14a

formed through arms 13 and 14 of the yoke and are retained by retainer clips 17. *Id.*, 3:27–31.

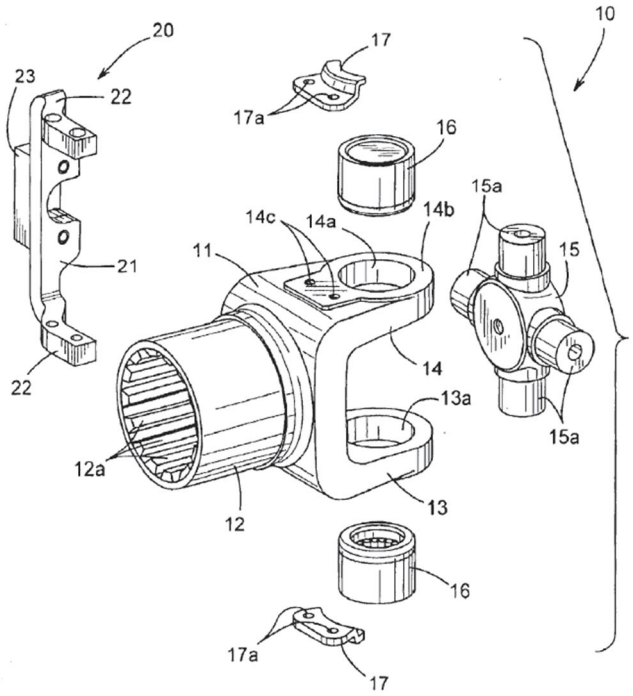

FIG. 1

Joyner, Fig. 1 (EX-1016).

4. *Karassik* (EX-1017)

58. Karrassik describes power pump theory and operations to aid in the implementation of multi-plunger pumps, including selection criteria such as power, capacity, and mechanical efficiency that one should consider when selecting a power pump configuration.

VIII. A POSITA WOULD NOT HAVE FOUND THE CLAIMS OBVIOUS FOR THE REASONS DISCUSSED IN THE PETITION

A. Dr. Durham's POSITA Would Not Have the Necessary Qualifications To Make the Modification that He Proposes Because Such a POSITA Would Not Have Had Sufficient Understanding of Gear System Technology

59. I understand that Dr. Durham defines a POSITA as one having "either (1) a Bachelor of Science in Mechanical Engineering, Electrical Engineering, Petroleum Engineering or an equivalent field as well as at least 2 years of academic or industry experience in the oil and gas industry, including well drilling, completion, or production, or (2) at least four years of industry experience in the oil and gas industry including well drilling, completion, or production." EX-1003 ('258 Patent), ¶ 48; EX-1003 ('533 Patent), ¶ 49. A POSITA with these qualifications, however, would not have the necessary training to design and implement any gearing system without using either the '258 or '533 patents as a guide for the reasons specified below. Dr. Durham has not shown that a POSITA as defined, without such experience and guidance, would have the required knowledge and experience to understand gear system design to combine the prior art in the way he proposes, much less to be able to select gear ratios and motor speeds in the way specified in the claims.

60. Both the '258 and '533 patents, along with their respective claims, are directed to using a "planetary gear train." For example, the Abstract of the '258 patent explains that the driving motors are used to power a multi-plunger pump, and

they require selecting "a gear ratio of the planetary gear train and a speed at which the plurality of motors operates" so as to "limit a maximum pump speed associated with the multi-plunger pump." EX-1001 ('258 Patent), Abstract; claim 1.

61. I agree with Dr. Durham that gears and gear systems have been used for many decades. That said, the design of gear systems for specified applications, like those in Buckley and Yi, is a complex field that requires specialized knowledge that is beyond the expertise of Petitioner's POSITA to implement without knowledge of the 258 or 533 patents. This is supported by Jelaska—that is, a reference in the Grounds presented by Dr. Durham—which is a textbook solely directed toward and titled *Gears and Gear Drives*. EX-1012, 1; EX-2012, 1. Jelaska explains that experience is necessary for, among other things, addressing the lubrication problems with planetary gears:

> Lubrication of the planet bearings [in a planetary gear system] can be challenging, especially for higher carrier speeds. This task can be overcome by experience, better some other engineer's than one's own.

See EX-2012, 382. From this passage from Jelaska, a POSITA would have understood that experience in gear design is necessary to solve the shortcomings of planetary gear systems for lubrication in order to implement Dr. Durham's proposed combination of prior art. EX-2012.

62. Another textbook from McGraw-Hill (*Gear Handbook*) (EX-2001) also supports that a POSITA needs additional gear design experience to implement

U.S. Well - Exhibit 2024
Liberty v. U.S. Well - IPR2025-00066
Page 51 of 64

Dr. Durham's proposed combination. That textbook by the Executive Director of the American Gear Manufacturers Association ("AGMA") explained that the "design and manufacture of a gear that is no better than the requirement for its successful application is an art rather than a science," and that "[v]olumes have been written and said in attempts to gain good gears." EX-2001, xi. The *Gear Handbook* itself is "approximately one thousand pages of moderately fine print" that attempts to cover "all aspects of the gear art." *Id.*, xiii This textbook provides another example showing that experience in gear design is necessary to implement Dr. Durham's proposed combination of prior art.

63. As of December 5, 2017, gear system design was a complex challenge. It continues to be a complex design. The book *Gear Drive Systems* (EX-2002) provides an explanation why:

> It has become apparent that gear units, when incorporated into a system of rotating machinery, ***are susceptible to a variety of problems***. All characteristics of the drive system from the driver to the driven equipment, including the lubrication system and accessories, can influence gearbox operation and must be considered in the specification, installation, operation, and maintenance of the unit.

Id., iv (emphasis added). Failing to meticulously design, test, and manufacture a gear system for a specific application can be catastrophic. "In many applications, the cost of one day's lost production due to a gearbox malfunction far exceeds the initial cost

of the unit ….” *Id.*, iii. This includes understanding the environment in which the gear system will be used, as “detrimental environments … can have an adverse effect on lubricant, bearings, gears, or seals” and therefore such environments “require special consideration in the design of the gearbox lubrication system and seals.” *Id.*, 18. Such environments include those commonly associated with oil and gas extraction—“dusty atmosphere,” “high ambient temperature,” “wide temperature variation,” and “high humidity.” *Id.*: *see* O. Asi, *Fatigue Failure of a Helical Gear in a Gearbox*, Engineering Failure Analysis 13, 1116–25 (2006) (EX-2022) (“Gears can fail in many different ways …. Several causes of [] failure have been identified. These include poor design of the gears set, incorrect assembly or mis-alignment of the gears, overloads, inadvertent stress raisers or subsurface defects in critical areas, and the use of incorrect materials and heat treatments.”). From these disclosures, a POSITA would have recognized that there are many complexities in gear design for prior art systems, such as Buckley and Yi, that would require experience to overcome, especially in locations with harsh operating environments.

64. This is especially critical in places where fracturing occurs, such as locations identified by Dr. Durham, including Texas. *See also* EX-1003 (258 patent), ¶¶ 53–54; EX-1003 (533 patent), ¶¶ 54-55. Fracturing operations occur in remote areas in these states that have harsh operating conditions including extreme heat and/or high humidity. Yi confirms that fracturing operations often occur in remote

areas, which makes maintenance difficult. EX-1010, [0005] ("Since fracturing sites are often located in remote areas and these components are expensive and difficult to stock adequately, resuming fracturing operations can take a long time even in countries where fracturing technology is relatively advanced.").

65. Given the complexity and criticality of gear system design, companies typically rely on gear system experts in the industry. For example, the AGMA is an "association of companies, consultants, and academicians with a direct interest in the design, manufacture, and application of gears, couplings, and related power transmission components and equipment." *See* EX-2003 (About AGMA PDF). AGMA lists over 495 member companies. *Id.*, 2; *see* EX-2004 (Member List – AGMA PDF). The list includes hundreds of companies that design and manufacture gear systems. As just one example, United Gear, Inc. offers engineering services wherein its teams "work closely with customers from the initial request for quote stage, providing creative solutions and incorporating their feedback to optimize both cost-effectiveness and manufacturability." EX-2005, 6 (United Gears PDF).

66. Most engineers in the oil and gas industry do not typically work on gear system design, and instead rely on those with expertise to do so. Gear system design requires a person with specialized engineering experience. *See* EX-2007, 1 ("What is a Gear Design Engineer and How to Become One") ("A Gear Design Engineer is responsible for developing and designing geared assemblies for various industrial

U.S. Well - Exhibit 2024
Liberty v. U.S. Well - IPR2025-00066
Page 54 of 64

purposes, sometimes including military applications …. Gear Design Engineers work to design, develop, and manufacture new and existing gear systems to help power vehicles and machines. They often meet customer specifications to create products designed precisely for clients' needs."); *see id.* ("The responsibilities of a gear design engineer involve designing gearing systems. In this career, you work to analyze existing systems or create a new configuration that meets the needs of the project. Your duties include performing mechanical analysis on designs and creating plans that engineers can use during assembly of the gearing system. After you implement your ideas, you test it for function, form, and efficiency. In many cases, your designs include a gearmotor or similar driving device."). Given the complexity of the field, engineers do not have the requisite expertise or experience to be able to implement Dr. Durham's proposed combination of prior art. Instead, they rely on those who do.

67. There are numerous examples of the specialized expertise of gear design engineers. *See* EX-2008, 1 (Proconpump job) ("We are currently seeking an ***experienced*** Gear Design Engineer to become part of our dedicated team. In this crucial role, you will be responsible for designing and developing new gear systems, optimizing existing ones, and ensuring all our products meet industry standards for

safety and functionality.”)[3]; EX-2009, 1 (CGI job) (“The Mechanical Engineer-Gear Design and Automation Engineer designs various types of gears, gearing arrangements and complete Planetary Gearboxes to meet customer requirements and new CGI product requirements. Designs and supports electro-mechanical test equipment for testing and improving new and existing gear and gearbox designs. Creates design specifications for (use of CGI products in) customer applications ….”)[4]; EX-2010, 1 (American Axle job) (“AAM is seeking an ***experienced*** and creative Gear Design Engineer to join our team … . The successful

---

[3] The expected tasks the gear design engineer performs include “design and develop gears for commercial and service industry machinery;” “perform detailed analysis and calculations to ensure gear functionality and durability;” “collaborate with cross-functional teams to create innovative gear designs that meet customer requirements.” *Id*., 1.

[4] The expected functions the Gear Design & Automation Engineer will perform include “Design (and review designs for) gears, gear arrangements and gearboxes (utilizing the following gear types and arrangements: spur, helical, worm, bevel, planetary face gearing, etc.);” and “Perform analysis and calculations to support the required performance and specifications of gear design projects and follow through with appropriate documentation.” *Id*., 2.

U.S. Well - Exhibit 2024
Liberty v. U.S. Well - IPR2025-00066
Page 56 of 64

candidate will have a solid background in gear design and manufacturing, as well as experience in CAD and other design software.") (emphasis added).

68. Dr. Durham's analysis and proposed combination of prior art does not account for the complexity and challenges of implementing a specific gear system, like Bergan's planetary gear system, into an oil/gas extraction system. Notably, the Jelaska textbook (EX-1012) provides four shortcomings or challenges of using planetary gear systems in any system—none of which was addressed by him:

- More complex design in regard to ordinary gear drives;
- Considerable centrifugal forces appear on planets and their bearings;
- Due to robust design, the control and maintenance are more difficult;
- Due to small dimensions, the quantity of lubricant is less and consequently its replacement has to be more frequent.

EX-2012, 341. The above challenges or shortcomings from Jelaska would discourage a POSITA from using Bergan's planetary gear system over other gear systems, such as the gearing system already used by Yi, *see* EX-1010, [0044].

69. Dr. Durham also did not acknowledge the fact that gear system design is a specialized field requiring expertise that is well beyond Petitioner's defined level of skill in the art in order to combine the prior art in the way that he proposes. Jelaska says that such experience is necessary. *See, e.g.*, EX-2012, 382 ("[l]ubrication of the planet bearings [in a planetary gear system] can be challenging, especially for higher

carrier speeds. This task can be overcome by experience, better some other engineer's than one's own."). One requirement of the invention claimed in both the '258 and the '533 patent is the "planetary gear system" that includes selecting a "gear ratio of the planetary gear train and a speed at which the plurality of motors operates." EX-1001, claim 1. Dr. Durham's level of skill, however, makes no mention of the necessary gear system expertise that would be needed to modify the prior art to arrive at this claimed invention. EX-1003 (258 patent), ¶ 48; EX-1003 (533 patent), ¶ 49.

70. I disagree that a POSITA with the qualifications defined by Dr. Durham would have the necessary gear system knowledge to combine the prior art in the manner proposed by Dr. Durham without using either the '258 or '533 patents as a guide. It cannot be reasonably inferred that a POSITA, as defined by Dr. Durham, would have the requisite gear system knowledge. He effectively proposes two possible skill levels: (1) a person with a B.S. in M.E., E.E., or petroleum engineering with at least two years of experience in the oil and gas industry, including well drilling, completion, or production; or (2) at least four years of industry experience in the oil and gas industry including well drilling, completion, or production. *Id.* Neither would have the requisite gear system knowledge to implement Bergan's planetary gear system in the systems of Buckley or Yi.

71. For the first skill level, Dr. Durham does not explain how such a person would have gained the requisite knowledge of gear system design, nor could he. Typical people with a B.S. in electrical engineering or a B.S. in petroleum engineering would have received minimal (if any) mechanical-engineering education, much less enough to understand and design gear systems for industrial applications.

72. The lack of requisite gear system knowledge of Dr. Durham's POSITA to combine Bergan with either Buckley or Yi is confirmed by my experience as a Professor and Associate Chair for the University of Houston. The University of Houston offers bachelor's degrees in Electrical Engineering (E.E.), Mechanical Engineering (M.E.), and Petroleum Engineering (Pet. Eng.). The course requirements for the E.E. and petroleum-engineering majors confirm that gear systems are not part of any courses that such students must take to earn their degrees. EX-2013 (E.E. course requirements); EX-2014 (Pet. Eng. course requirements). Similarly, for a student seeking to attain a B.S.M.E., the University of Houston program requires that a student take only one course where gear systems are taught, but for that course the discussion of gears is less than 15% of the total course. EX-2015 (M.E. course requirements); EX-2016 (Course syllabus for MECE 4331 - Design of Machine Elements).

73. For Dr. Durham's second proposed level of skill, his POSITA does not even have an undergraduate degree in engineering design. Given the complexity of gear system design, Dr. Durham fails to show that four years of work in "well drilling, completion, or production" would provide a POSITA with knowledge sufficient to understand the intricacies of gear system design necessary for his proposed combination. This is confirmed across many dozens of paragraphs describing the background of the technology and the state of the art, and Dr. Durham never once identifies planetary gear systems as being regularly employed in fracturing pumps. *See* EX-1003 ('258 patent), ¶¶ 50–77, 87–119; EX-1003 ('533 patent), ¶¶ 51–78, 88–120. Rather, when discussing gear systems, he relies on textbooks and papers specific to the specialized field of gear design. EX-1003 ('258 patent), ¶¶ 78–86; EX-1003 ('533 patent), ¶¶ 79–87.

74. Dr. Durham's proposed work experience for a POSITA—that is, either two years or four years of experience with "well drilling, completion, or production"—does not make up for the lack of formalized education in gear systems. As I explained above in ¶ 67, industrial-applications gear system design is regularly farmed out to engineering companies that specialize in gear design. Stated otherwise, a company in the fracturing industry would not entrust gear system design to a person with merely a B.S. engineering degree and two years of generalized oilfield experience.

75. Instead, companies in the fracturing industry would entrust gear system design to persons having years of specialized knowledge in gear system design. For example, the company Power Engineering & Mfg. ("PEM") specializes in "custom design and manufacturing of heavy-duty gearboxes." EX-2017, 1. In 2024, PEM publicized that it "recently shipped serial number 1 of our new design pump drive gearbox for the Oil & Gas industry. This pump drive gearbox will be used on the new electric hydraulic fracturing pump trailers. The PEM Engineering and Sales Teams worked with our customers' engineering team and four other vendors on this project to ensure the design met all required e-frac pump trailer specifications." *Id.*, 6. This is directly on point with both the '258 patent and the '533 patent claimed inventions and proves that the gearbox design for a hydraulic-fracturing application required specialized gear design knowledge.

76. In another example, in 2024, ITAMCO (Indiana Technology and Manufacturing Companies) publicized that it was "leveraging cutting-edge technologies to optimize gear manufacturing for fracking applications." EX-2018 (website). This example shows that the industry relies on companies and people with specialized knowledge to design gear systems.

77. Given the detailed disclosure in their specifications, a POSITA having the '258 or '533 patents would have understood the terms used in the claims and would have been able to make and use the claimed invention without difficulty. For

U.S. Well - Exhibit 2024
Liberty v. U.S. Well - IPR2025-00066
Page 61 of 64

example, both patents both include a detailed drawing and corresponding description of the planetary gear system, shown in Figure 1 below:

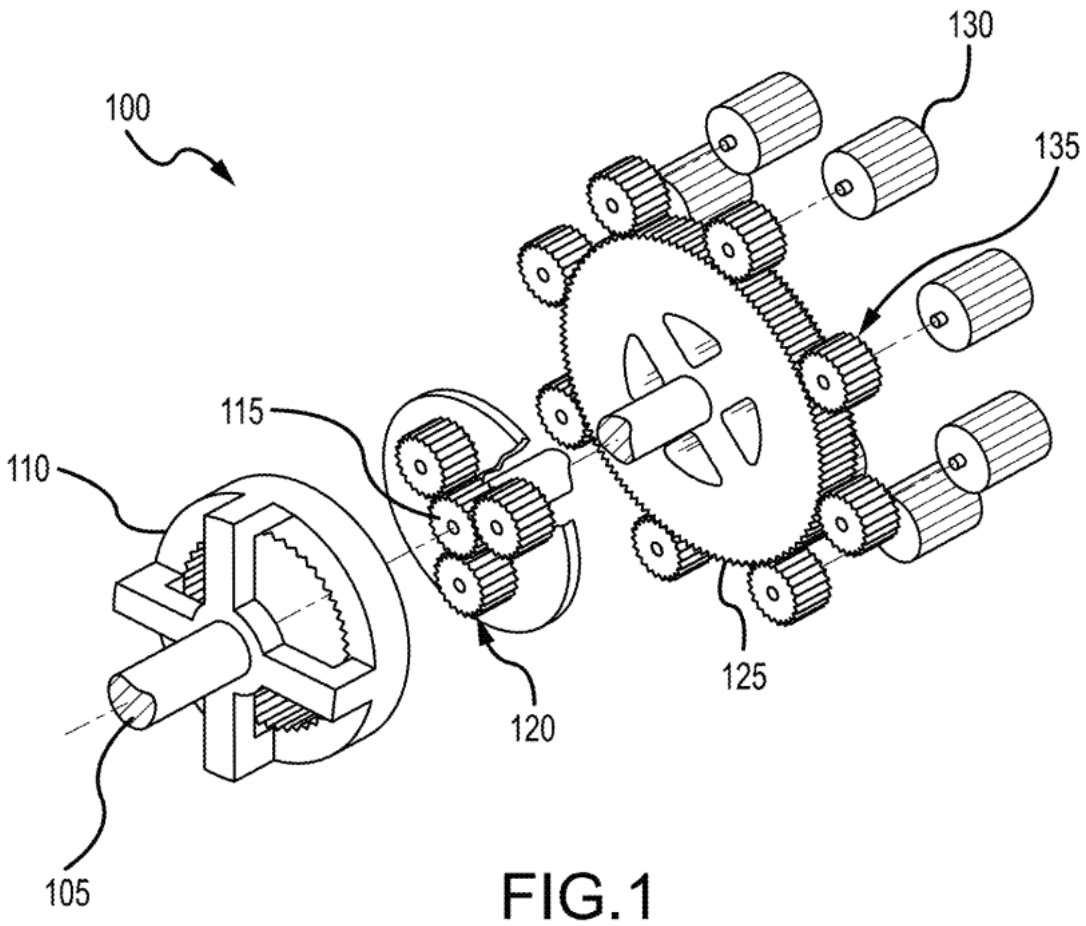

258 Patent, Fig. 1 (EX-1001); *see id.*, 7:4–33

Both patents similarly provide a detailed disclosure addressing how to implement this planetary gear system in a multi-plunger pump, shown below:

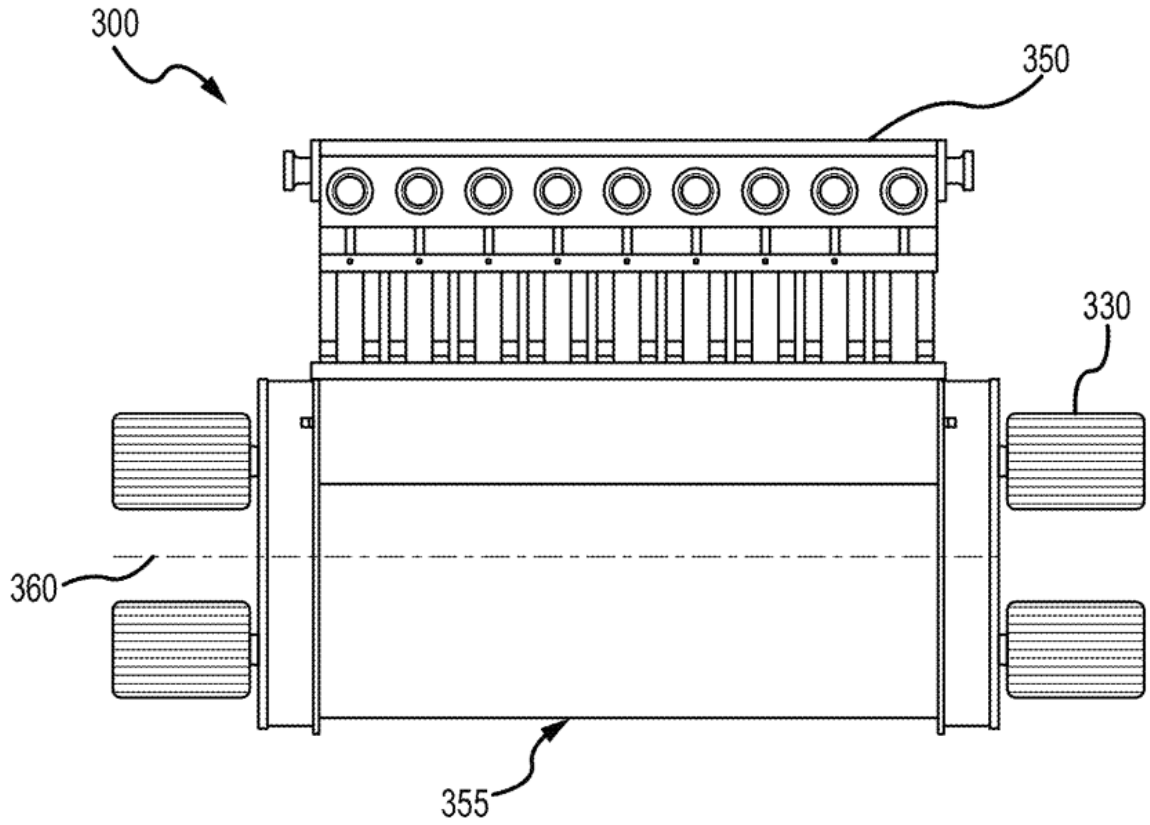

FIG.3

258 Patent, Fig. 3 (EX-1001); *see id.*, 8:33–56.

Based on the above disclosures, a POSITA having the ’258 or ’533 patents would have understood and would have been able to make and use the claimed invention without difficulty as well as understand the claim terms.

78. Dr. Durham’s argument that such a POSITA would have been motivated to use the gear system disclosed in Bergan (EX-1006) in either Buckley’s (EX-1004)

or Yi's (EX-1010) fracturing-pump system is incorrect. As defined by Dr. Durham, a POSITA would have understood that the gear systems in place in Buckley and Yi were acceptable for their purpose and would not have looked to modify or change them with Bergan's gear system. His POSITA qualifications lack the necessary experience, without using either the '258 or '533 patents as a guide, to appreciate how to implement his proposed combination of prior art and what, if any, advantages Bergan's gear system would bring to the Buckley and Yi pump systems.

79. For the reasons that I explained above, Dr. Durham has failed to show that, without using either the '258 or '533 patents as a guide, a POSITA as defined would have had the knowledge and experience with gear systems before the '258 or '533 patents necessary to have been motivated to make the § 103 combinations proposed by Dr. Durham.

IX. CONCLUSION

80. For the reasons above, it is my opinion that each of Patent Owner's claims are not obvious. I reserve the right to offer additional opinions should these matters proceed to trial.