Trials@uspto.gov
571-272-7822

Paper 18
Entered: November 9, 2023

UNITED STATES PATENT AND TRADEMARK OFFICE

BEFORE THE PATENT TRIAL AND APPEAL BOARD

MICROSOFT CORPORATION,
Petitioner,

v.

THROUGHPUTER, INC.,
Patent Owner.

IPR2023-00852
Patent 11,150,948 B1

Before MICHAEL R. ZECHER, JOHN A. HUDALLA, and MATTHEW S. MEYERS, *Administrative Patent Judges*.

HUDALLA, *Administrative Patent Judge*.

DECISION
Denying Institution of *Inter Partes* Review
35 U.S.C. § 314

Microsoft Corporation ("Petitioner") filed a Petition (Paper 2, "Pet.") requesting an *inter partes* review of claims 1–15 ("the challenged claims") of U.S. Patent No. 11,150,948 B1 (Ex. 1001, "the '948 patent"). Petitioner filed a declaration of Dr. Henry H. Houh (Ex. 1003) and two declarations of

GoSecure, Inc.
Exhibit 2005
CrowdStrike v. GoSecure
IPR2025-00067

June Ann Munford (Exs. 1012, 1015) with its Petition. ThroughPuter, Inc. ("Patent Owner") filed a Preliminary Response (Paper 11, "Prelim. Resp.").

We have authority to determine whether to institute an *inter partes* review. *See* 35 U.S.C. § 314 (2018); 37 C.F.R. § 42.4(a) (2023). Under 35 U.S.C. § 314(a), we may not authorize an *inter partes* review unless the information in the petition and the preliminary response "shows that there is a reasonable likelihood that the petitioner would prevail with respect to at least 1 of the claims challenged in the petition." For the reasons that follow, we do not institute an *inter partes* review.

I. BACKGROUND

A. Real Parties-in-Interest

Petitioner identifies Microsoft Corporation as the real party-in-interest. Pet. 69. Patent Owner identifies ThroughPuter, Inc., as the real party-in-interest. Paper 4, 2; Paper 14, 2.

B. Related Matters

As required by 37 C.F.R. § 42.8(b)(2), the parties identify the following related matters (Pet. 69; Paper 4, 2; Prelim. Resp. 1; Paper 14, 2):

ThroughPuter, Inc. v. Microsoft Corp., No. 2:22-cv-00344-BJR (W.D. Wash.);

ThroughPuter, Inc. v. Microsoft Corp., No. 2:22-cv-00492-BJR (W.D. Wash.);

IPR2022-00527;

IPR2022-00528;

IPR2022-00574;

IPR2022-00757;

IPR2022-00758; and

IPR2022-01566 ("the '1566 IPR").

C. The '948 patent

The '948 patent is titled "Managing Programmable Logic-Based Processing Unit Allocation on a Parallel Data Processing Platform." Ex. 1001, code (54). The '948 patent relates to providing "an extensible, multi-stage, application program load adaptive, parallel data processing architecture shared dynamically among a set of application software programs according to processing load variations of said programs." *Id.* at 3:26–30.

Figure 1 of the '948 patent, reproduced below, shows "a multi-stage manycore processor system architecture, comprising a set of application processing load adaptive manycore processing stages interconnected by a packet destination app-task-inst controlled cross connect." Ex. 1001, 8:44–48.

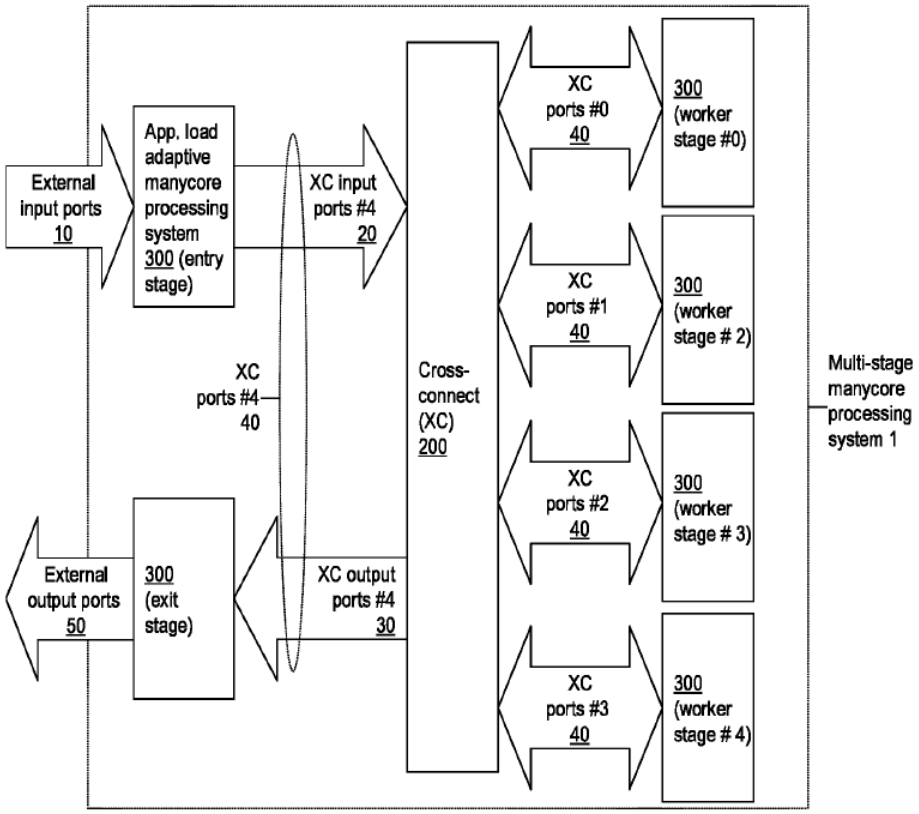

FIG. 1

As shown in Figure 1, system 1 "may have any practical number of" processing stages 300 and cross connect ports 40 connecting stages 300 to cross connect 200. *Id.* at 8:50–54. Each stage 300 includes a manycore processor system 500 (*id.* at 12:30–32), an example of which is illustrated in Figure 5.

Figure 5 of the '948 patent, reproduced below, shows "a functional block diagram for the manycore processor system 500 dynamically shared among instances of the locally hosted application program tasks, with capabilities for application processing load adaptive allocation of the cores among the applications." Ex. 1001, 14:61–66.

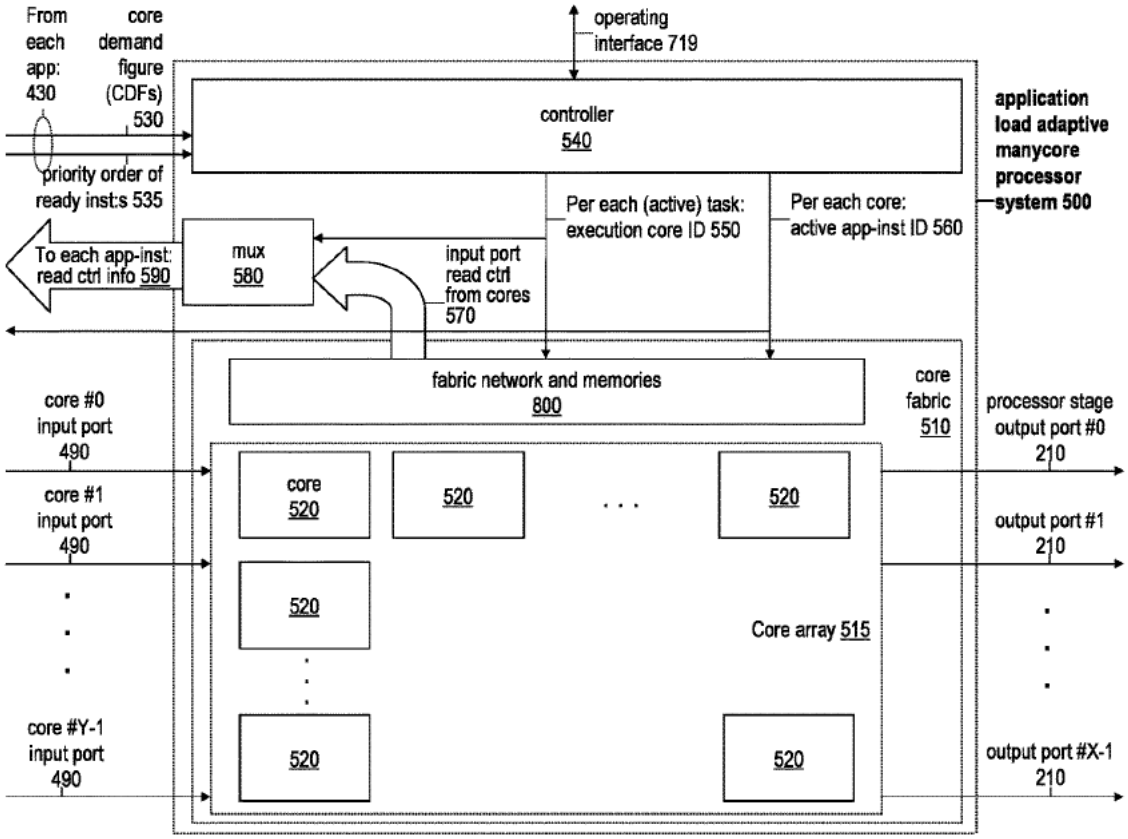

FIG. 5

As shown in Figure 5, "the processor system 500 comprises an array 515 of processing cores 520, which are dynamically shared among . . . the locally hosted tasks of a set of application programs." *Id.* at 15:12–15. Each of cores 520 may be any kind of software program processing hardware resource, including "central processing units (CPUs), graphics processing units (GPUs), digital signal processors (DSPs) or application specific processors (ASPs) etc." *Id.* at 15:4–8. In addition, "in programmable logic (FPGA) implementation, the core type . . . is furthermore reconfigurable." *Id.* at 15:8–10. "A hardware logic based controller module 540 within the

processor system 500, through a periodic process, allocates and assigns the cores 520 of the processor 500 among the set of applications 610 (FIG. 6) and their instances," based on core-demand figures (CDFs), which express how many cores 520 an application's "associated app-task is presently able [to] utilize for its ready to execute instances." *Id.* at 15:19–22, 15:33–37.

Figure 6 of the '948 patent, reproduced below, shows the process "performed by the controller logic 540 of the system 500, repeatedly selecting and placing the to-be-executing instances 640 of the set of locally hosted app-tasks 610 to their assigned target cores 520 within the array 515." Ex. 1001, 16:5–10.

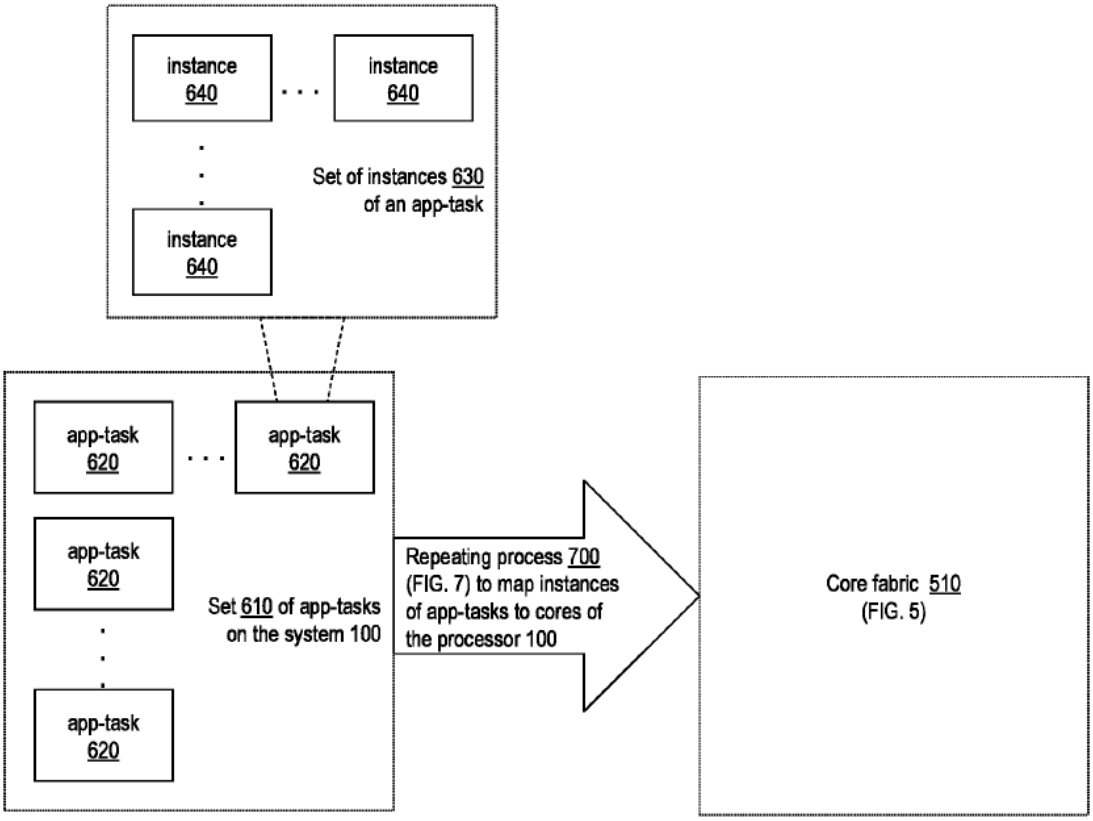

FIG. 6

As shown in Figure 6, for a given set of app-tasks 610, "each individual app-task 620 configured for a system 500 has its collection 630 of its instances 640." *Id.* at 16:14–18. For isolation among the app-tasks 620, hardware controller 540 in each processor system 500 inserts an application ID for data packets passed to cross connect 200. *Id.* at 9:26–33. This way, "the tasks of any given application running on the processing stages 300 in a system 1 can trust that the packets they received from the XC 200 are from its own application." *Id.* at 9:33–36.

The application that led to the '948 patent claims priority to, *inter alia*, a provisional application that was filed on November 4, 2011 (i.e., the critical date). Ex. 1001, code (60). Petitioner applies this date for qualifying the asserted references as prior art. *See* Pet. 2–3.

D. Illustrative Claim

Of the challenged claims, claims 1, 6, and 11 are independent. Claims 2–5 depend directly from claim 1; claims 7–10 depend directly from claim 6; and claims 12–15 depend directly from claim 11. Claim 1 is illustrative of the challenged claims and recites:

> 1. A method on a parallel data processing platform comprising a plurality of programmable logic-based processing units for accelerating a service comprising at least a first program and a second program, different than the first program, the method comprising:
>
> forming a first set of inter-task communication paths connecting a first set of programmable logic-based processing units of the plurality of programmable logic-based processing units into a first multi-stage program instance, wherein the first multi-stage program instance is configured to accelerate the first program, and wherein the first set of programmable logic-based processing units are interconnected using reconfigurable cross-connects;
>
> forming a second set of inter-task communication paths connecting a second set of programmable logic-based processing units of the plurality of programmable logic-based processing units to a second multi-stage program instance, wherein the second multi-stage program instance is configured to accelerate the second program, and wherein the second set of programmable logic-based processing units are interconnected using reconfigurable cross-connects;
>
> in response to a first increased demand for the first multi-stage program instance determined by monitoring a first

> characteristic corresponding to the first set of programmable logic-based processing units, based on an adaptive optimized resource allocation policy, adding at least one more programmable logic-based processing unit to the first set of programmable logic-based processing units from the plurality of programmable logic-based processing units; and
>
> in response to a second increased demand for the second multi-stage program instance determined by monitoring a second characteristic different from the first characteristic, corresponding to the second set of programmable logic-based processing units, based on the adaptive optimized resource allocation policy, adding at least one more programmable logic-based processing unit to the second set of programmable logic-based processing units from the plurality of programmable logic-based processing units.

Ex. 1001, 28:63–29:37.

E. Prior Art

Petitioner relies on the following prior art:

U.S. Patent Application Publication No. 2009/0187756 A1, filed Dec. 10, 2008, published July 23, 2009 (Ex. 1004, "Nollet");

Vu Manh Tuan, "A Study on a Multitasking Environment for Dynamically Reconfigurable Processors," Doctoral Dissertation, School of Science for Open and Environmental Systems Graduate School of Science and Technology, Keio University (2009) (Ex. 1005, "Tuan"); and

Euiseong Seo et al., "Energy Efficient Scheduling of Real-Time Tasks on Multicore Processors," 19 *IEEE Transactions on Parallel and Distributed Systems* 1540 (Nov. 2008) (Ex. 1006, "Seo").

F. The Asserted Ground

Petitioner challenges claims 1–15 of the '948 patent based on the following ground (Pet. 1):

Claim(s) Challenged	35 U.S.C. §	Reference(s)/Basis
1–15	103(a)[1]	Nollet, Tuan, Seo

II. ANALYSIS

A. Legal Standards

A claim is unpatentable under 35 U.S.C. § 103(a) if the differences between the claimed subject matter and the prior art are such that the subject matter, as a whole, would have been obvious at the time the invention was made to a person having ordinary skill in the art to which said subject matter pertains. *See KSR Int'l Co. v. Teleflex Inc.*, 550 U.S. 398, 406 (2007). The question of obviousness is resolved on the basis of underlying factual determinations, including (1) the scope and content of the prior art; (2) any differences between the claimed subject matter and the prior art; (3) the level of skill in the art; and (4) where in evidence, so-called secondary considerations.[2] *See Graham v. John Deere Co.*, 383 U.S. 1, 17–18 (1966). We also recognize that prior art references must be "considered together with the knowledge of one of ordinary skill in the pertinent art." *In re*

[1] The Leahy-Smith America Invents Act ("AIA"), Pub. L. No. 112-29, 125 Stat. 284, 287–88 (2011), amended 35 U.S.C. §§ 102 and 103. Because the '948 patent claims priority to an application filed before March 16, 2013 (the effective date of the relevant amendments), the pre-AIA versions of §§ 102 and 103 apply.

[2] The present record does not include any evidence of secondary considerations of nonobviousness.

Paulsen, 30 F.3d 1475, 1480 (Fed. Cir. 1994) (citing *In re Samour*, 571 F.2d 559, 562 (CCPA 1978)).

B. Level of Ordinary Skill in the Art

Citing testimony from Dr. Houh, Petitioner contends a person of ordinary skill in the art "would have had at least a combination of a Bachelor's Degree (or a similar Master's Degree, or higher degree) in an academic area emphasizing computer science, or a related field, and two or more years of work experience with parallel processing technologies." Pet. 15 (citing Ex. 1003 ¶¶ 20–22). Patent Owner does not address the level of ordinary skill in the art in the Preliminary Response.

On the present record, we are satisfied that Petitioner's proposed definition generally comports with the level of skill necessary to understand and implement the teachings of the '948 patent (*see* Ex. 1003 ¶ 21), and for purposes of this Decision, we adopt Petitioner's proposed level of skill.

C. Claim Interpretation

In an *inter partes* review, we construe each claim

> using the same claim construction standard that would be used to construe the claim in a civil action under 35 U.S.C. [§] 282(b), including construing the claim in accordance with the ordinary and customary meaning of such claim as understood by one of ordinary skill in the art and the prosecution history pertaining to the patent.

37 C.F.R. § 42.100(b) (2023). Accordingly, our claim construction standard is the same as that of a district court. *See id.* Under the standard applied by district courts, claim terms are generally given their plain and ordinary meaning, as would have been understood by a person of ordinary skill in the

art at the time of the invention and in the context of the entire patent disclosure. *Phillips v. AWH Corp.*, 415 F.3d 1303, 1313 (Fed. Cir. 2005) (en banc). "There are only two exceptions to this general rule: 1) when a patentee sets out a definition and acts as his own lexicographer, or 2) when the patentee disavows the full scope of a claim term either in the specification or during prosecution." *Thorner v. Sony Comput. Entm't Am. LLC*, 669 F.3d 1362, 1365 (Fed. Cir. 2012).

Petitioner does not put forth any terms of the challenged claims for construction. *See* Pet. 15. Patent Owner does not address claim construction in the Preliminary Response. For purposes of this Decision, we determine that no aspects of the challenged claims require explicit construction. *See, e.g.*, *Realtime Data, LLC v. Iancu*, 912 F.3d 1368, 1375 (Fed. Cir. 2019) ("The Board is required to construe 'only those terms . . . that are in controversy, and only to the extent necessary to resolve the controversy.'" (quoting *Vivid Techs., Inc. v. Am. Sci. & Eng'g, Inc.*, 200 F.3d 795, 803 (Fed. Cir. 1999))).

D. Obviousness Ground Based on Nollet, Tuan, and Seo

Petitioner contends the subject matter of claims 1–15 would have been obvious over the combination of Nollet, Tuan, and Seo. Pet. 1–3, 16–68. As part of its obviousness contentions, Petitioner asserts a public availability date of October 2009 for Tuan, which is a doctoral dissertation. *Id.* at 2; Ex. 1005, 1. Petitioner does not explain its basis for asserting this date, and instead relies only on the following citations in a footnote, which is reproduced here in its entirety: "EX1012, ¶8 (authenticating public availability date); EX1015, ¶¶7-9." Pet. 2 n.1. Patent Owner argues that

Petitioner does not establish sufficiently for purposes of institution that Tuan qualifies as a prior art printed publication. Prelim. Resp. 2–15. For the reasons explained below, we agree with Patent Owner.

1. Legal Standards for Qualifying a Printed Publication as Prior Art

For a reference to qualify as a printed publication, it "must have been sufficiently accessible to the public interested in the art." *In re Lister*, 583 F.3d 1307, 1311 (Fed. Cir. 2009) (quoting *In re Cronyn*, 890 F.2d 1158, 1160 (Fed. Cir. 1989)). The touchstone is "public accessibility," and this "is determined on a case-by-case basis based on the 'facts and circumstances surrounding the reference's disclosure to members of the public.'" *Id.* (quoting *In re Klopfenstein*, 380 F.3d 1345, 1350 (Fed. Cir. 2004); *In re Hall*, 781 F.2d 897, 898–99 (Fed. Cir. 1986)). "A given reference is 'publicly accessible' upon a satisfactory showing that such document has been disseminated or otherwise made available to the extent that persons interested and ordinarily skilled in the subject matter or art[,] exercising reasonable diligence, can locate it." *SRI Int'l, Inc. v. Internet Sec. Sys., Inc.*, 511 F.3d 1186, 1194 (Fed. Cir. 2008) (quoting *Bruckelmyer v. Ground Heaters, Inc.*, 445 F.3d 1374, 1378 (Fed. Cir. 2006)).

"When a reference is uploaded to a website or deposited in a library, the fact that the reference is indexed or cataloged in some way can indicate that it is publicly accessible." *Samsung Elecs. Co. v. Infobridge Pte. Ltd.*, 929 F.3d 1363, 1369 (Fed. Cir. 2019). "In certain situations, particularly for manuscripts or dissertations stored in libraries, courts may inquire whether a reference was sufficiently indexed, catalogued, and shelved." *Hulu v. Sound View Innovations, LLC*, IPR2018-01039, Paper 29 at 9 (PTAB Dec. 20,

2019) (precedential). There is no strict requirement for indexing, searchability, cataloging, or shelving. *See, e.g.*, *Samsung*, 929 F.3d at 1369; *Jazz Pharms., Inc. v. Amneal Pharms., LLC*, 895 F.3d 1347, 1359 (Fed. Cir. 2018). But it is "critical" that there be "some evidence that a person of ordinary skill could have reasonably found" the reference. *Samsung*, 929 F.3d at 1369. A reference "is not publicly accessible if the only people who know how to find it are the ones who created it." *Id.* at 1372.

"[A]t the institution stage, the petition must identify, with particularity, evidence sufficient to establish a reasonable likelihood that the reference was publicly accessible before the critical date of the challenged patent and therefore that there is a reasonable likelihood that it qualifies as a printed publication." *Hulu*, Paper 29 at 13. "[T]here is no presumption in favor of institution or in favor of finding a reference to be a printed publication." *Id.* at 16.

2. The Parties' Positions

As noted above, Petitioner only provides citations in a footnote in support of its assertion that Tuan was published in October 2009. Pet. 2 & n.1. These citations reference the two declarations of Ms. Munford, who is a librarian with "over ten years of experience in the library/information science field." Ex. 1012 ¶ 2. Ms. Munford testifies in a declaration dated March 30, 2022, that she secured the MARC[3] record for Tuan as held by the Keio University library, and she includes the MARC record and a certified translation of it as an appendix to her declaration. Ex. 1012 ¶ 10 (citing *id.*

[3] "MARC" is an acronym for Machine Readable Catalog. Ex. 1012 ¶ 5.

at 22–30). Ms. Munford also testifies that the "008 field" of this MARC record "indicates the Keio University library first acquired this dissertation as of October 1, 2009," and from this, Ms. Munford testifies that Tuan "was made available to the public shortly after its initial acquisition in Fall 2009." *Id.* ¶ 11. A second declaration from Ms. Munford dated April 14, 2023,[4] references her earlier testimony regarding Tuan in the March 30, 2022, declaration and states the following:

> The MARC record for [Tuan] included a number of fields with relevant dates, including a 502 field that provides a date related to the institution where that dissertation was presented. Yet, considering that MARC record as a whole, I believe that the 008 field best describes the date when the library created a record for that dissertation and would have been close in time with when the library received that dissertation and made it available to the public through the libraries catalog. This is what I testified to in that declaration, and I continue to stand by that testimony.

Ex. 1015 ¶ 9. Ms. Munford's second declaration does not include any other testimony specific to Tuan.

Patent Owner contends that Petitioner fails to establish that Tuan qualifies as a printed publication for two independent reasons. Prelim. Resp. 10–15. First, Patent Owner argues that Ms. Munford's cited MARC record references a document dated November 5, 2008, whereas the version of Tuan filed in this proceeding (i.e., Exhibit 1005) is dated 2009. *Id.* at 10–11 (citing, *inter alia*, Ex. 1005, 1; Ex. 1012, 23 (field 502), 26 (field 32), 28

[4] The declaration actually lists a date of "4/14/2022," but the context makes clear that it should have been dated 2023 given that it includes web printouts dated March 18, 2023. *See* Ex. 1015, 11–12; *see also* Prelim. Resp. 9 n.5 (noting date discrepancy).

(field 32)). As such, Patent Owner argues that "[t]he November 5, 2008, document identified by Ms. Munford appears to be a different reference that is not Ex. 1005." *Id.* at 11. Second, Patent Owner argues that, even if Petitioner shows technical availability, it fails to show public accessibility. *Id.* at 12–15; *see id.* at 13 (arguing that this "is a classic example of an attempt to show technical accessibility, which is insufficient to meet *Hulu*'s public accessibility requirement") (citing *Hulu*, Paper 29 at 10). According to Patent Owner, Petitioner fails to provide any explanation of how an ordinary artisan could have found Tuan with the exercise of reasonable diligence (*id.* at 13), and Petitioner fails to provide evidence to support such a finding (*id.* at 13–15).

Patent Owner also notes that the same issues regarding Tuan's alleged public accessibility were considered by the panel in the '1566 IPR, which was a proceeding involving a related patent and the same two parties here. Prelim. Resp. 1. Patent Owner urges us to follow the reasoning from the '1566 IPR and deny institution based on Petitioner's failure to establish Tuan's public accessibility.[5] *Id.* at 1, 5–8. Patent Owner notes that "the Petition here includes even less discussion of Tuan and its alleged public availability than the Petition in the 1566 proceeding"[6] insofar as Petitioner merely cites, but does not explain, Ms. Munford's testimony. *Id.* at 5–6

---

[5] Patent Owner filed a copy of the Decision Denying Institution (the "'1566 IPR DDI") from the '1566 IPR as Exhibit 2002. The '1566 IPR involved the same parties as here and also addressed whether the Tuan reference qualifies as prior art and was publicly accessible before the critical date of the involved patent. *See* Ex. 2002, 7–16.

[6] Patent Owner filed a copy of the Petition from the '1566 IPR as Exhibit 2005.

(citing Pet. 2 n.1; Ex. 2005, 10–11). Patent Owner argues that, just as in the '1566 IPR, Petitioner relies on a screenshot of a library catalog referencing Tuan from December 2021, but Petitioner does not put forth any evidence to show that this catalog (or a similar one) existed before the critical date.[7] *Id.* at 7 (citing Ex. 1012, 15–19). Patent Owner also notes that Ms. Munford's first declaration (Exhibit 1012) is identical to the testimony considered in the '1566 IPR, which the panel found deficient because it "d[id] not indicate that an ordinary artisan could have located Tuan with reasonable diligence." *Id.* at 6 (quoting Ex. 2002, 11). Patent Owner highlights the panel's finding that this testimony did not establish that an ordinarily skilled artisan could have located Tuan with reasonable diligence. *Id.* (citing Ex. 2002, 12). Furthermore, Patent Owner acknowledges that Petitioner puts forth additional testimony from Ms. Munford in this case (i.e., her second declaration in Exhibit 1015) that was not before the panel in the '1566 IPR, but Patent Owner argues that the additional testimony does not remedy any deficiencies related to public accessibility. *Id.* at 8.

3. Analysis

At the outset, we observe that Tuan includes no conventional markers of publication. *See* Ex. 1005, 1. In addition, the Petition is devoid of any substantive explanation as to how Tuan qualifies as a prior art printed publication under 35 U.S.C. § 102. Instead, Petitioner includes only a date

[7] In the '1566 IPR, the critical date was August 23, 2013. Ex. 2005, 2. As noted above, the critical date for the '948 patent is November 4, 2011. The different critical dates for the two challenged patents do not materially impact the analysis for public accessibility given that Petitioner has not put forth evidence about public accessibility at *any* earlier point in time.

and a footnote with two citations to Ms. Munford's testimony. *See* Pet. 2 & n.1 (citing Ex. 1012 ¶ 8; Ex. 1015 ¶¶ 7–9). This showing is facially insufficient to satisfy Petitioner's requirement that the Petition must "identif[y], in writing and with particularity, each claim challenged, the grounds on which the challenge to each claim is based, and the evidence that supports the grounds for the challenge to each claim." 35 U.S.C. § 312(a)(3); *see also* 37 C.F.R. § 42.104(b) (stating that the petition must "[p]rovide a statement of the precise relief requested for each claim challenged" by identifying "[h]ow the construed claim is unpatentable under the statutory grounds identified"). And, to the extent Petitioner purports to make its arguments based on the cited testimony from Ms. Munford, this amounts to improper incorporation by reference in contravention of 37 C.F.R. § 42.6(a)(3).[8] Thus, Petitioner's failure to develop any argument regarding the prior art status of Tuan represents a fatal flaw in the Petition.

And, for the reasons discussed below, even if we were to assume that Petitioner adopts Ms. Munford's testimony as its own contentions, we would still find Petitioner's evidence insufficient to show that Tuan was publicly accessible before the critical date of the '948 patent (i.e., November 4, 2011). Thus, even in this scenario, Petitioner fails to show a reasonable likelihood that Tuan qualifies as a prior art printed publication for reasons

---

[8] Rule 42.6(a)(3) is meant to "eliminate abuses that arise from incorporation" so that we need not "play archaeologist with the record." *Cisco Sys., Inc. v. C-Cation Technologies, LLC*, IPR2014-00454, Paper 12 at 10 (PTAB Aug. 29, 2014) (informative) (quoting *DeSilva v. DiLeonardi*, 181 F.3d 865, 866–67 (7th Cir. 1999)) (citing Rules of Practice for Trials Before the Patent Trial and Appeal Board and Judicial Review of Patent Trial and Appeal Board Decisions, 77 Fed. Reg. 48,612, 48,617 (Aug. 14, 2012)).

similar to those discussed in the '1566 IPR DDI. *See Hulu*, Paper 29 at 13. We will now analyze Ms. Munford's testimony and supporting evidence regarding the public accessibility of Tuan. For purposes of our analysis, we have assumed (without deciding) that all of her supporting evidence relates to the same version of Tuan (i.e., Exhibit 1005), and we assume that Tuan was received by the Keio University library on October 1, 2009, as indicated by the MARC record located by Ms. Munford (*see* Ex. 1012, pp. 23–24).

In her first declaration, Ms. Munford testifies regarding her credentials (Ex. 1012 ¶¶ 2–5), provides background information on MARC records (*id.* ¶¶ 5–8), and states that she located the MARC record for Tuan from the Keio University library's public catalog (*id.* ¶¶ 9–10). She also addresses Tuan's date, stating:

> The 008 field of the MARC record in Appendix TUAN01 indicates the date of record creation. The 008 field of Appendix TUAN01 indicates the Keio University library first acquired this dissertation as of October 1, 2009. Considering this information, it is my determination that Exhibit 1005 *A Study on a Multitasking Environment for Dynamically Reconfigurable Processors* was made available to the public shortly after its initial acquisition in Fall 2009.

Id. ¶ 11; *see id.* at pp. 22–30 (Appendix TUAN01). Appendix TUAN01 includes the MARC record itself (*id.* at p. 23) and its translation (*id.* at p. 24), as well as a December 2021 screenshot of the library catalog used by Ms. Munford to obtain that record (*id.* at p. 25) and a translation of this screenshot (*id.* at pp. 26–29). *See also id.* at pp. 25 ("screenshot-search.lib.keio.ac.jp-***2021.12.10***-07_29_47" (emphasis added)), 30 (translator's certification attesting to translation of two documents).

Ms. Munford's second declaration affirms her earlier testimony on Tuan and her belief that "the 008 field best describes the date when the

library created a record for [Tuan] and would have been close in time with when the library received that dissertation and made it available to the public through the libraries [sic] catalog." Ex. 1015 ¶ 9. Ms. Munford does not further address Tuan.

Importantly, Ms. Munford's testimony does not indicate that an ordinary artisan could have located Tuan with reasonable diligence. We additionally find that Ms. Munford's conclusory assertion that Tuan "was made available to the public" in October 2009 (Ex. 1012 ¶ 11; *see also* Ex. 1015 ¶ 9) is insufficient to establish public accessibility. As our reviewing court has explained, it is "critical" that there be "some evidence that a person of ordinary skill could have reasonably found" the reference. *Samsung*, 929 F.3d at 1369; *see also id.* at 1372 (stating that a reference "is not publicly accessible if the only people who know how to find it are the ones who created it"). In other words, even assuming that Ms. Munford establishes Tuan was technically available to the public in October 2009, her testimony fails to support a finding that an ordinary artisan could have located Tuan with reasonable diligence.

We further note that the screenshot of the Keio University library catalog provided by Ms. Munford is dated December 2021 (Ex. 1012, p. 25), which is over ten years after the November 2011 critical date of the '948 patent (*see* Pet. 2–3). Ms. Munford does not provide details about the library catalog itself or the screenshot provided, and instead she states only that she "secured this MARC record [her]self from the library's public catalog." Ex. 1012 ¶ 10. Moreover, the present record includes no evidence that the library's catalog (or a substantially similar one) existed on or before the critical date (e.g., via archived versions of the catalog). Accordingly, we

determine that the December 2021 screenshot (Ex. 1012, pp. 25–29) is not probative of whether Tuan was publicly accessible before the critical date.

We additionally note that the preliminary record does not include any evidence of a hypothetical keyword search that an ordinarily skilled artisan would have used to locate Tuan, which is a common way of proving public accessibility. *See Lister*, 583 F.3d at 1315–16 (finding public accessibility based on particular keyword search that would have yielded reference). We acknowledge that the screenshot of the Keio University library catalog appears to have allowed a "search" in December 2021 (*see* Ex. 1012, pp. 25–26 ("New search")), but there is no evidence or testimony regarding *any* search functionality before the critical date, over ten years prior.

For these reasons, we determine that Petitioner fails to "identify, *with particularity*, evidence sufficient to establish a reasonable likelihood that the reference was publicly accessible before the critical date" of the '948 patent (i.e., November 4, 2011). *Hulu*, Paper 29 at 13 (emphasis added). As a result, we determine that Petitioner fails to show a reasonable likelihood that Tuan qualifies as a prior art printed publication. *See id.* Accordingly, we determine that Petitioner has not established a reasonable likelihood that it would prevail in showing that the subject matter of claims 1–15 would have been obvious over the combination of Nollet, Tuan, and Seo.

III. CONCLUSION

After considering the evidence and arguments presented in the current record, we determine that Petitioner has not demonstrated a reasonable likelihood that it would prevail with respect to at least one of the claims

challenged in the Petition. Therefore, we do not institute an *inter partes* review on the asserted ground as to any of the challenged claims.

IV. ORDER

Accordingly, it is

ORDERED that the Petition is denied as to all challenged claims, and no *inter partes* review is instituted.

PETITIONER:

W. Karl Renner
David L. Holt
Jennifer Huang
Nicholas Stephens
FISH & RICHARDSON P.C.
axf-ptab@fr.com
holt2@fr.com
jjh@fr.com
nstephens@fr.co

PATENT OWNER:

James L. Davis, Jr.
ROPES & GRAY LLP
james.l.davis@ropesgray.com

W. Cook Alciati
Michael A. Dorfman
GARDELLA GRACE P.A.
calciati@gardellagrace.com
mdorfman@gardellagrace.com