US006262724B1

(12) **United States Patent**
Crow et al.

(10) **Patent No.: US 6,262,724 B1**
(45) **Date of Patent: Jul. 17, 2001**

(54) **USER INTERFACE FOR PRESENTING MEDIA INFORMATION**

(75) Inventors: **Daniel N. Crow**, San Francisco; **Cary Dean**, Sunnyvale; **Elizabeth Dykstra-Erickson**, San Francisco; **J. Peter Hoddie**, Mountain View; **Steven P. Jobs**, Palo Alto, all of CA (US); **Timothy E. Wasko**, High River (CA)

(73) Assignee: **Apple Computer, Inc.**, Cupertino, CA (US)

(*) Notice: Subject to any disclaimer, the term of this patent is extended or adjusted under 35 U.S.C. 154(b) by 0 days.

(21) Appl. No.: **09/293,508**

(22) Filed: **Apr. 15, 1999**

Related U.S. Application Data

(62) Division of application No. 09/293,507, filed on Apr. 15, 1999.

(51) **Int. Cl.**[7] **G06F 3/00**
(52) **U.S. Cl.** **345/328**; 345/340; 345/343
(58) **Field of Search** 345/328, 326, 345/339, 340, 348, 343, 346

(56) **References Cited**

U.S. PATENT DOCUMENTS

5,404,316		4/1995	Klingler et al.	345/328
5,519,828	*	5/1996	Rayner	345/326
5,664,128		9/1997	Bauer	345/334
5,682,326		10/1997	Klingler et al.	345/302
5,732,184		3/1998	Chao et al.	386/55
5,745,096	*	4/1998	Ludolph et al.	345/340
5,760,767		6/1998	Shore et al.	345/328
5,874,958	*	2/1999	Ludolph	345/339
5,999,173	*	12/1999	Ubillos	345/328
6,026,389		2/2000	Nakajima et al.	707/1
6,031,529	*	2/2000	Migos et al.	345/340

OTHER PUBLICATIONS

PCT International Search Report, mailed Jul. 11, 2000, PCT/US00/10441, 5 pages.

* cited by examiner

Primary Examiner—Raymond J. Bayerl
Assistant Examiner—Sy D. Luu
(74) *Attorney, Agent, or Firm*—Blakely, Sokoloff, Taylor & Zafman

(57) **ABSTRACT**

A user interface and methods for using a user interface for controlling processing of time-based media files. In one exemplary method, a graphical representation of a time line for a time-based media is displayed along with a graphical representation of a current time along the graphical representation of the time line. A start graphical indicator and a stop graphical indicator is also displayed along the graphical representation of the time line. A portion of the time-based media may be selected for presentation by dragging or positioning at least one of the start graphical indicator and the stop graphical indicator along the graphical representation of the time line. In another aspect of the invention, an exemplary method allows for the adaptive control of a portion of the interface which indicates time relating to a time-based media. An input speed is determined where this input is to change the portion and the rate at which the change to this portion occurs is dependent upon the input speed. Other aspects of the present invention relating to the interface for controlling the processing of time-based media files are also described.

77 Claims, 25 Drawing Sheets

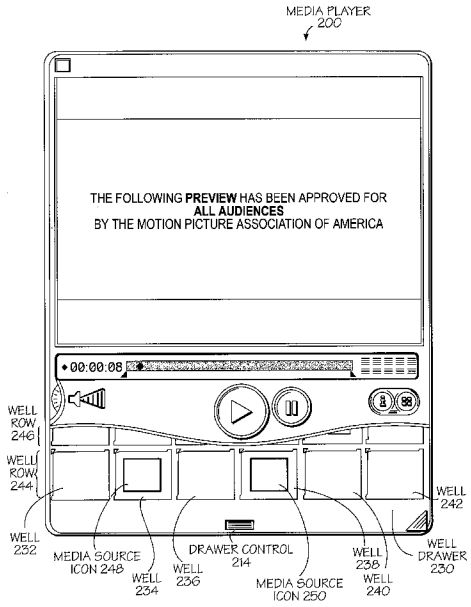

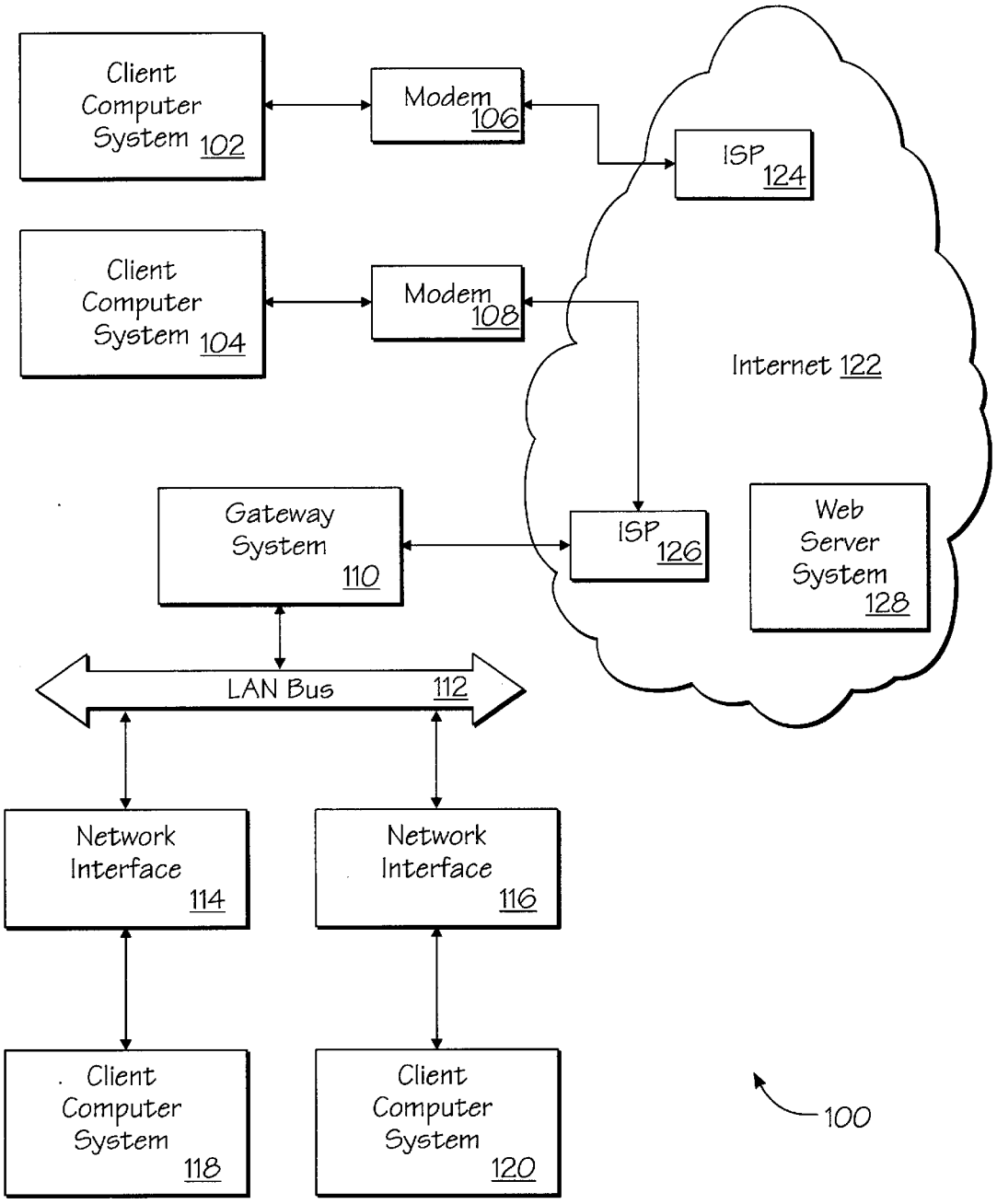
Client Computer System 102
Modem 106
ISP 124
Client Computer System 104
Modem 108
Internet 122
Gateway System 110
ISP 126
Web Server System 128
LAN Bus 112
Network Interface 114
Network Interface 116
Client Computer System 118
Client Computer System 120
100

Fig. 1

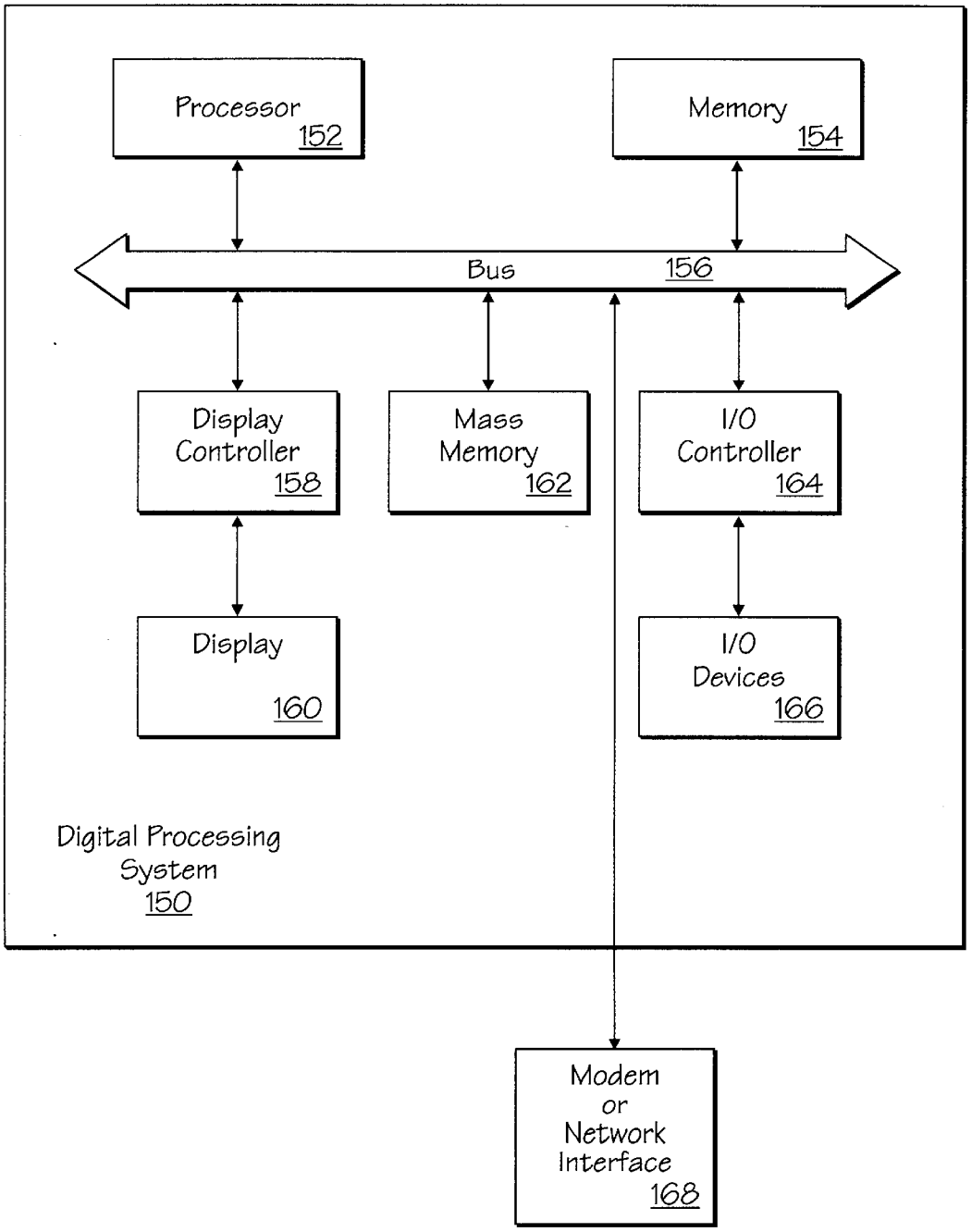
Processor
152
Memory
154
Bus
156
Display
Controller
158
Mass
Memory
162
I/O
Controller
164
Display
160
I/O
Devices
166
Digital Processing
System
150
Modem
or
Network
Interface
168

Fig. 2

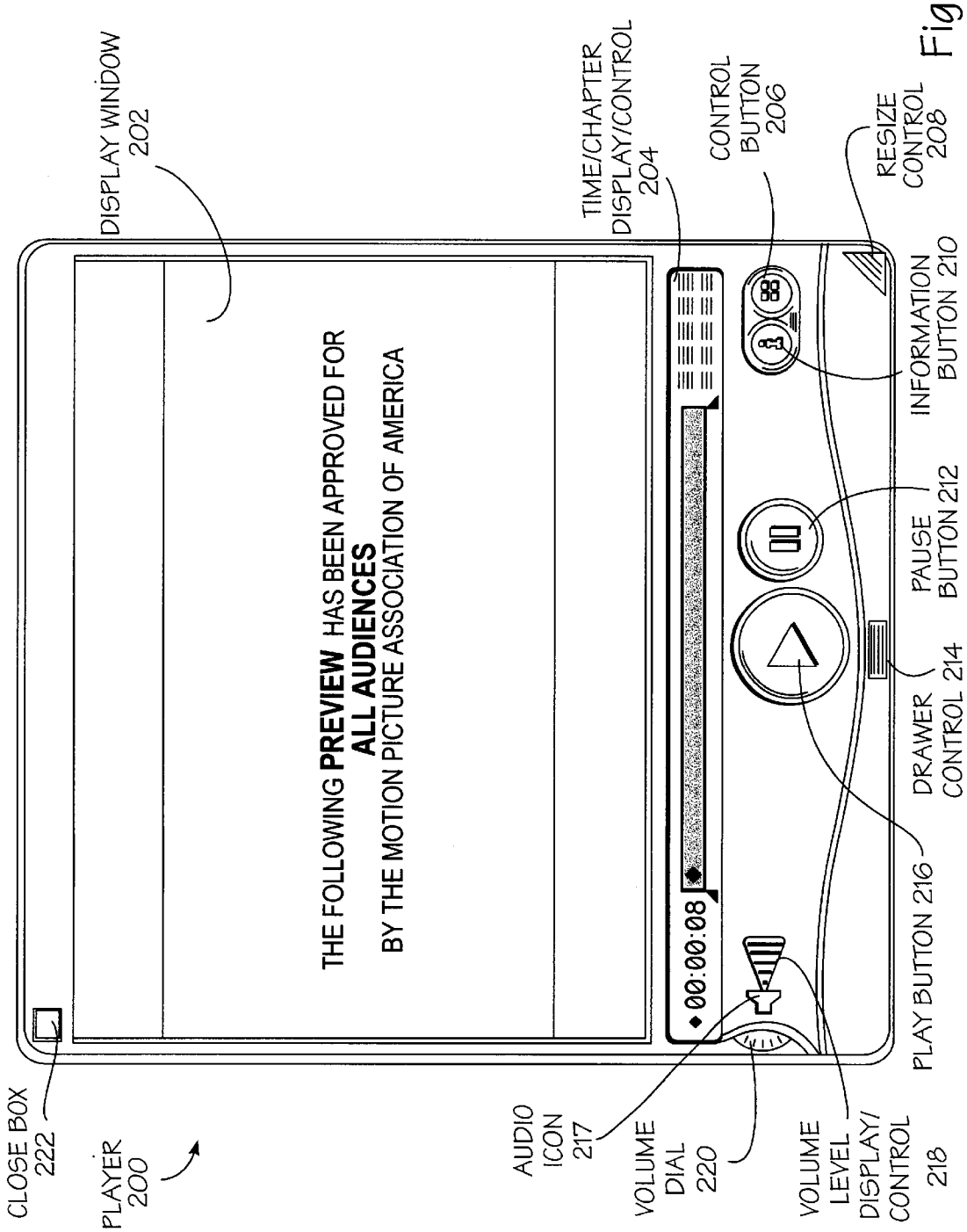
DISPLAY WINDOW 202
THE FOLLOWING PREVIEW HAS BEEN APPROVED FOR ALL AUDIENCES
BY THE MOTION PICTURE ASSOCIATION OF AMERICA
TIME/CHAPTER DISPLAY/CONTROL 204
00:00:08
CONTROL BUTTON 206
RESIZE CONTROL 208
INFORMATION BUTTON 210
PAUSE BUTTON 212
DRAWER CONTROL 214
PLAY BUTTON 216
CLOSE BOX 222
PLAYER 200
AUDIO ICON 217
VOLUME DIAL 220
VOLUME LEVEL DISPLAY/ CONTROL 218

Fig. 3A

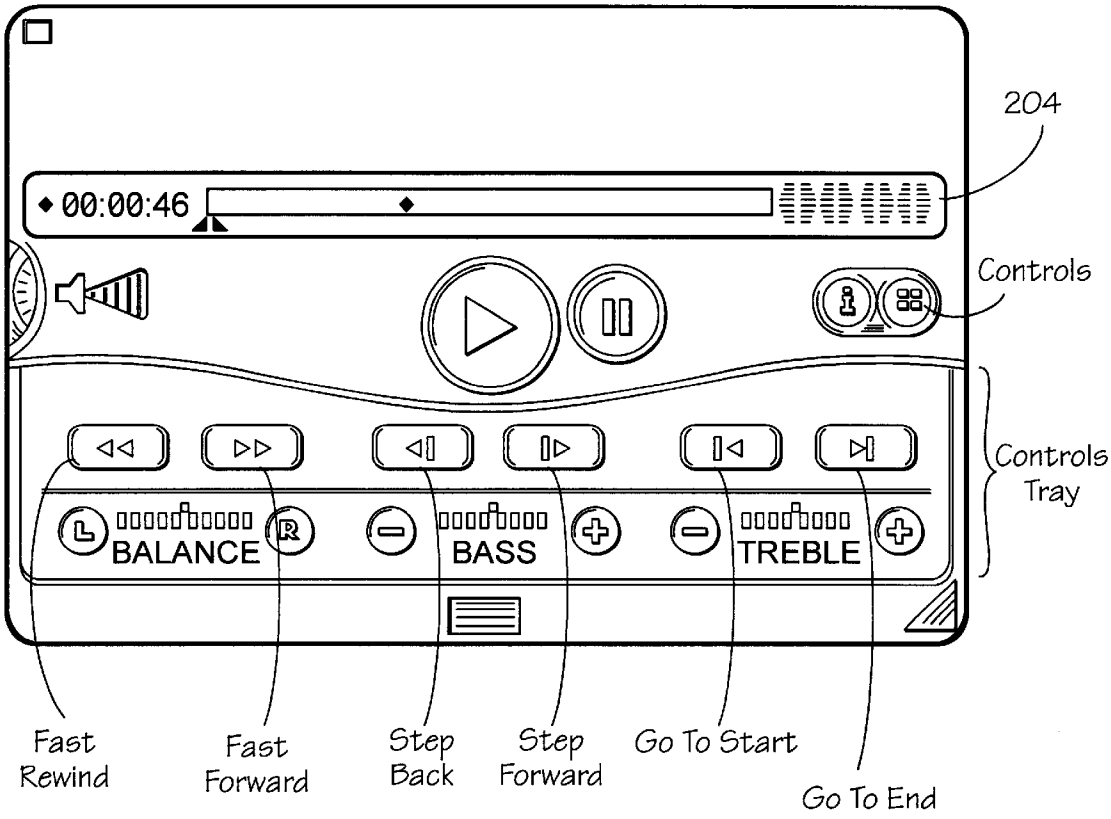
204
00:00:46
Controls
Controls Tray
BALANCE
BASS
TREBLE
Fast Rewind
Fast Forward
Step Back
Step Forward
Go To Start
Go To End

Fig. 3B

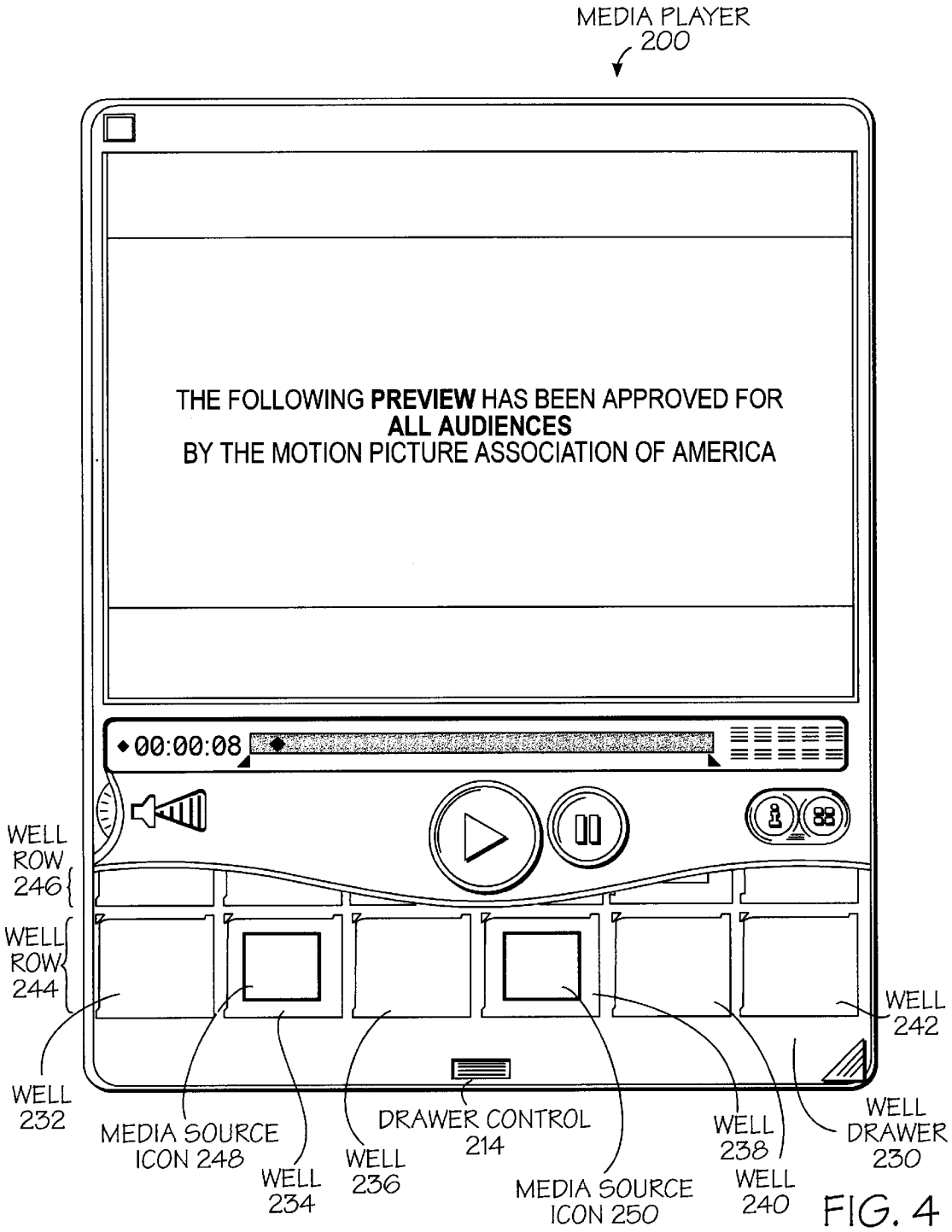
MEDIA PLAYER
200
THE FOLLOWING PREVIEW HAS BEEN APPROVED FOR
ALL AUDIENCES
BY THE MOTION PICTURE ASSOCIATION OF AMERICA
00:00:08
WELL ROW 246
WELL ROW 244
WELL 232
MEDIA SOURCE ICON 248
WELL 234
WELL 236
DRAWER CONTROL 214
MEDIA SOURCE ICON 250
WELL 238
WELL 240
WELL 242
WELL DRAWER 230

FIG. 4

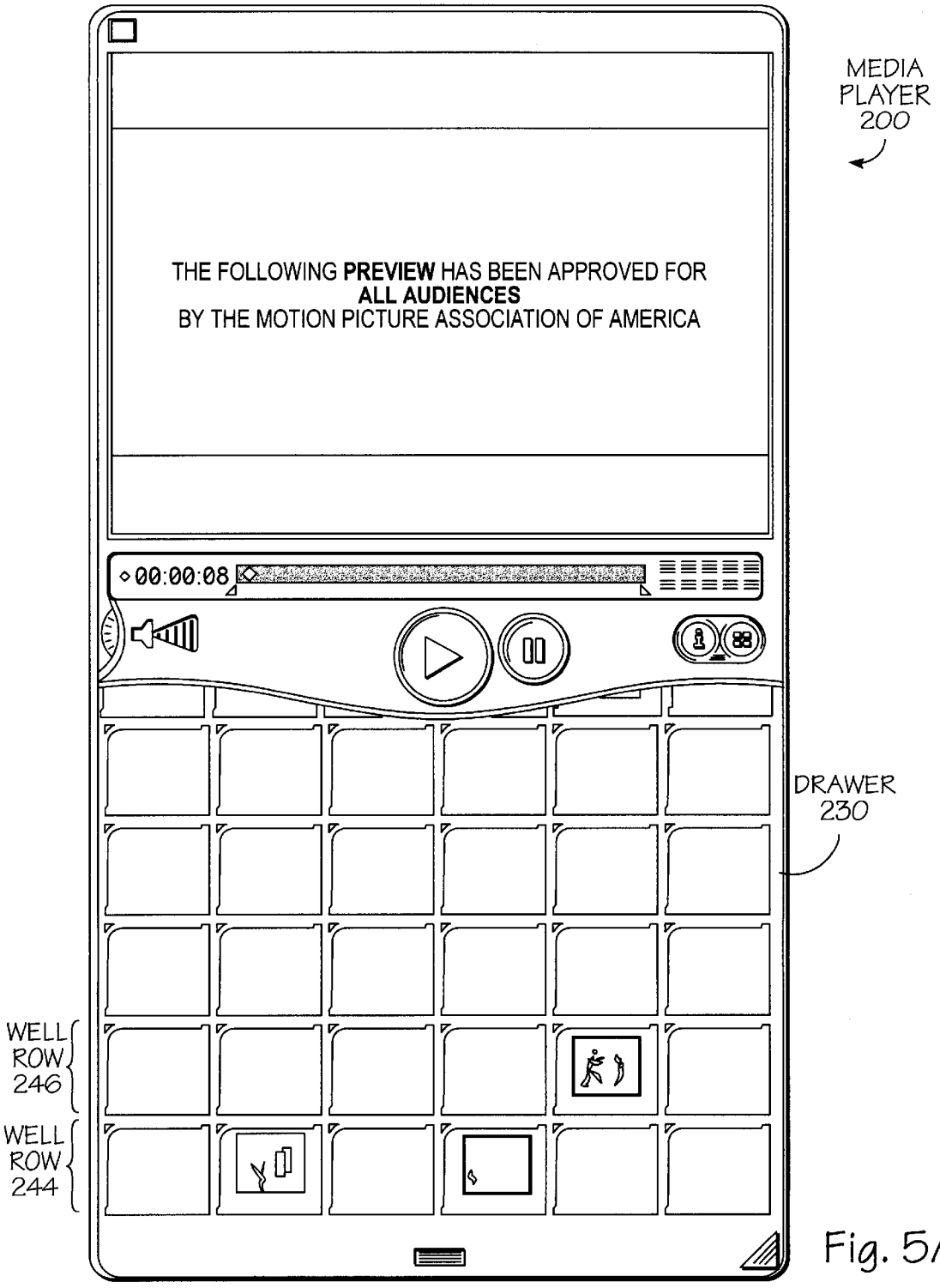
MEDIA PLAYER 200
THE FOLLOWING PREVIEW HAS BEEN APPROVED FOR
ALL AUDIENCES
BY THE MOTION PICTURE ASSOCIATION OF AMERICA
00:00:08
DRAWER 230
WELL ROW 246
WELL ROW 244

Fig. 5A

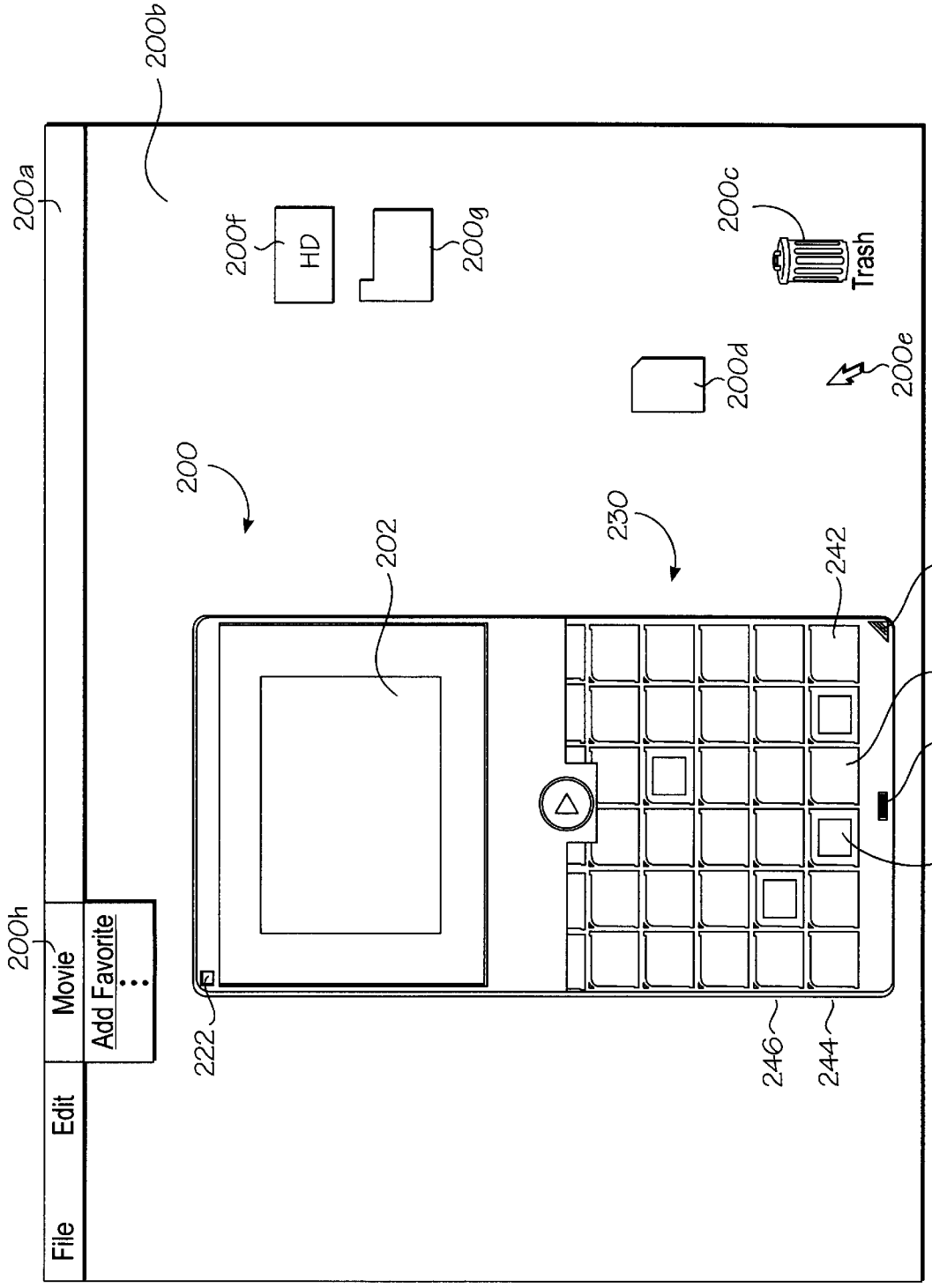
200a
200b
File
Edit
Movie
Add Favorite
200h
200f
HD
200g
200c
Trash
200d
200e
200
202
230
242
208
236
214
248
222
246
244

Fig. 5B

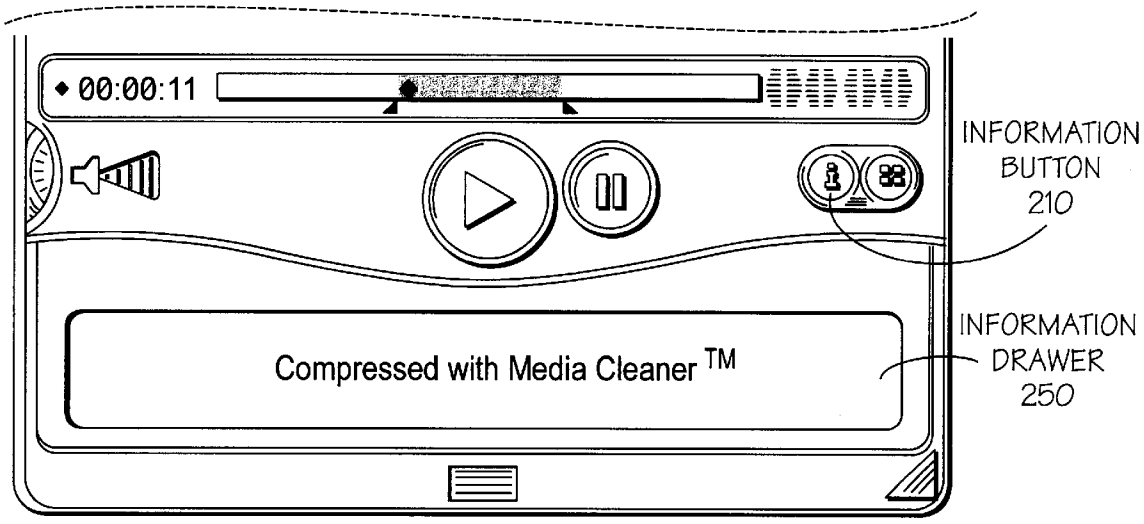
00:00:11
INFORMATION BUTTON 210
Compressed with Media Cleaner TM
INFORMATION DRAWER 250

Fig. 6A

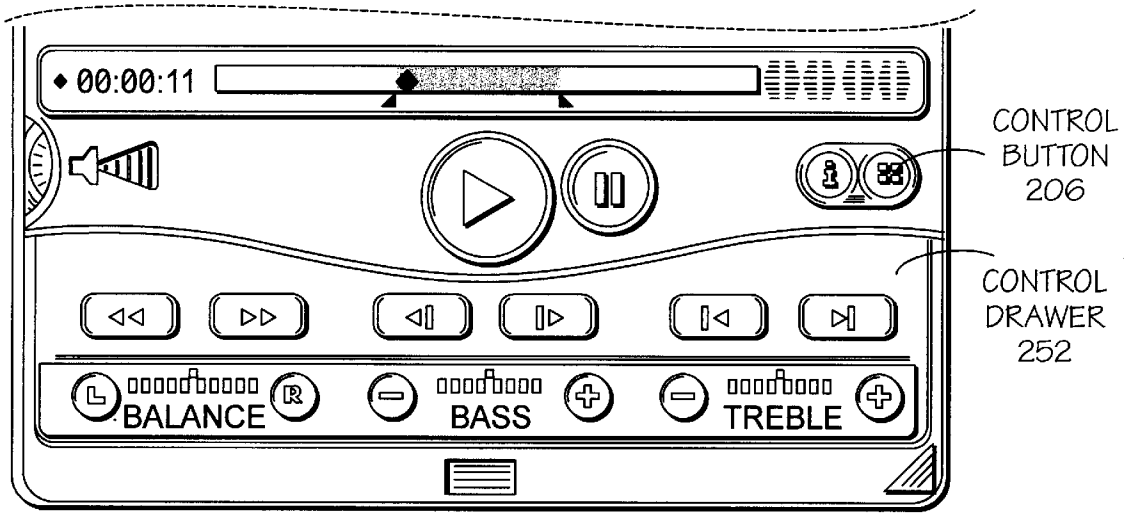
00:00:11
CONTROL BUTTON 206
CONTROL DRAWER 252
BALANCE
BASS
TREBLE

Fig. 6B

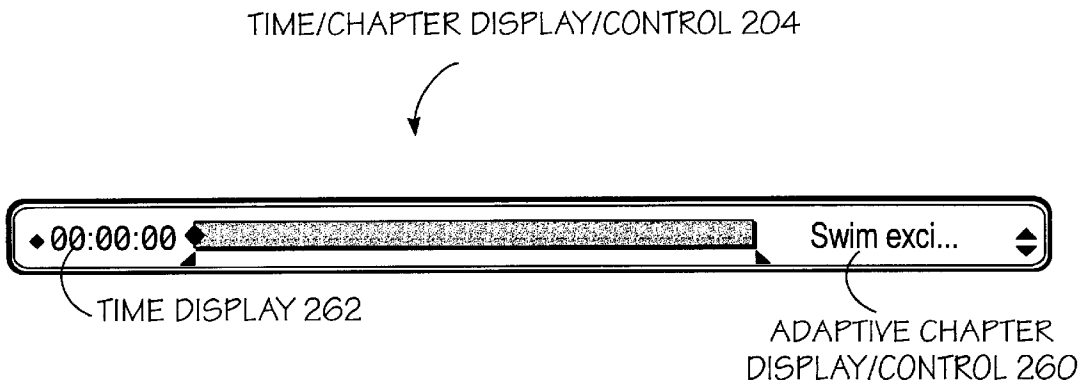
TIME/CHAPTER DISPLAY/CONTROL 204
00:00:00
Swim exci...
TIME DISPLAY 262
ADAPTIVE CHAPTER DISPLAY/CONTROL 260

Fig. 7A

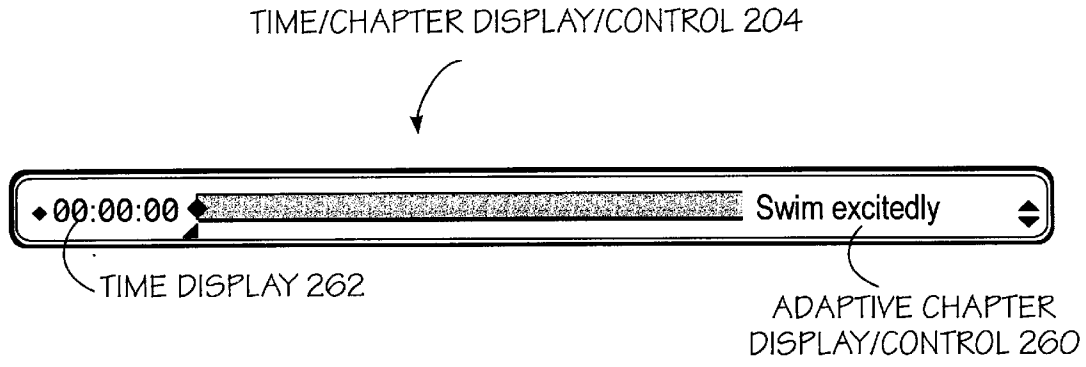
TIME/CHAPTER DISPLAY/CONTROL 204
00:00:00
Swim excitedly
TIME DISPLAY 262
ADAPTIVE CHAPTER DISPLAY/CONTROL 260

Fig. 7B

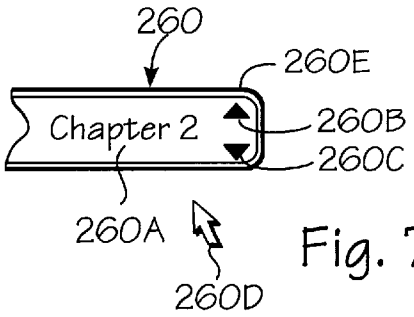

Fig. 7C

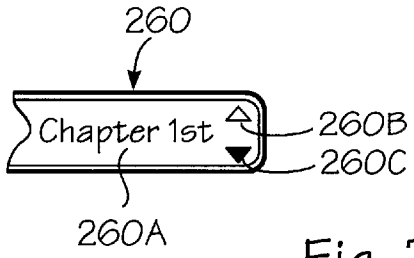

Fig. 7D

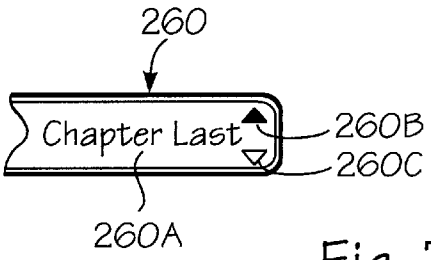

Fig. 7E

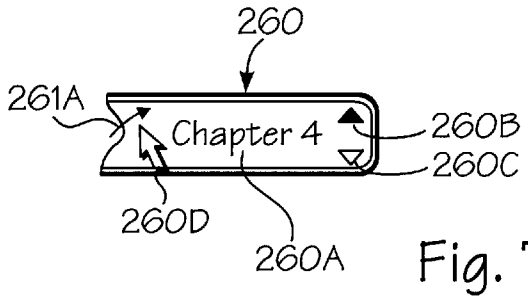

Fig. 7F

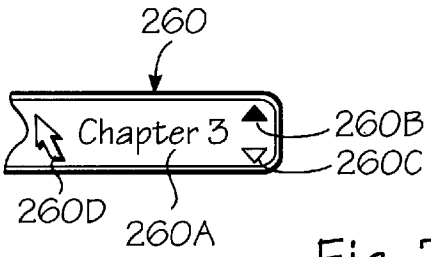

Fig. 7G

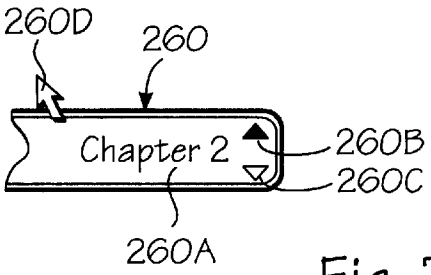

Fig. 7H

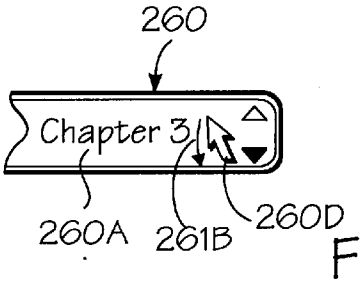

Fig. 7I

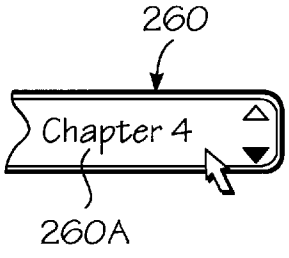

Fig. 7J

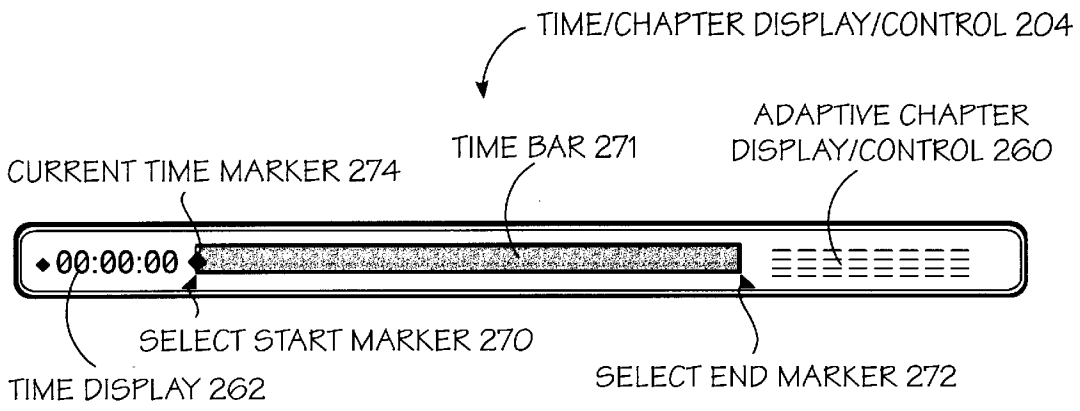
TIME/CHAPTER DISPLAY/CONTROL 204
TIME BAR 271
ADAPTIVE CHAPTER DISPLAY/CONTROL 260
CURRENT TIME MARKER 274
00:00:00
SELECT START MARKER 270
TIME DISPLAY 262
SELECT END MARKER 272

Fig. 8A

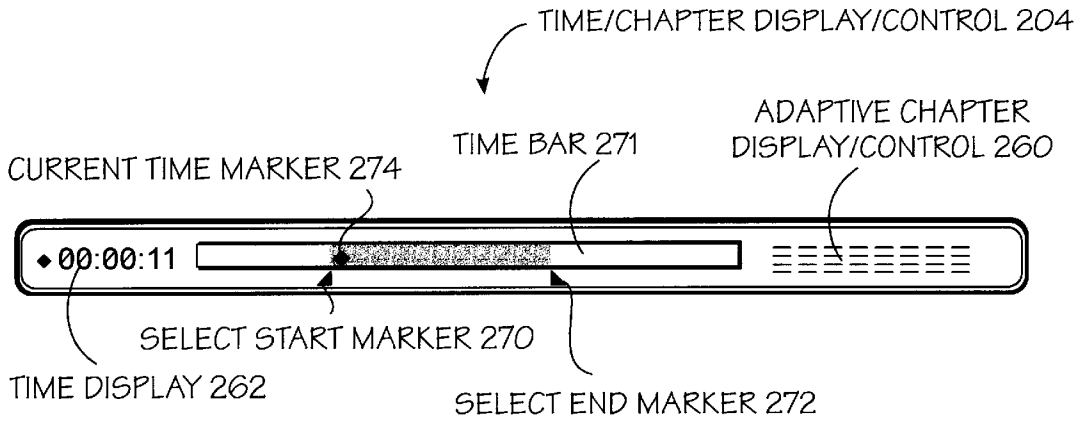
TIME/CHAPTER DISPLAY/CONTROL 204
TIME BAR 271
ADAPTIVE CHAPTER DISPLAY/CONTROL 260
CURRENT TIME MARKER 274
00:00:11
SELECT START MARKER 270
TIME DISPLAY 262
SELECT END MARKER 272

Fig. 8B

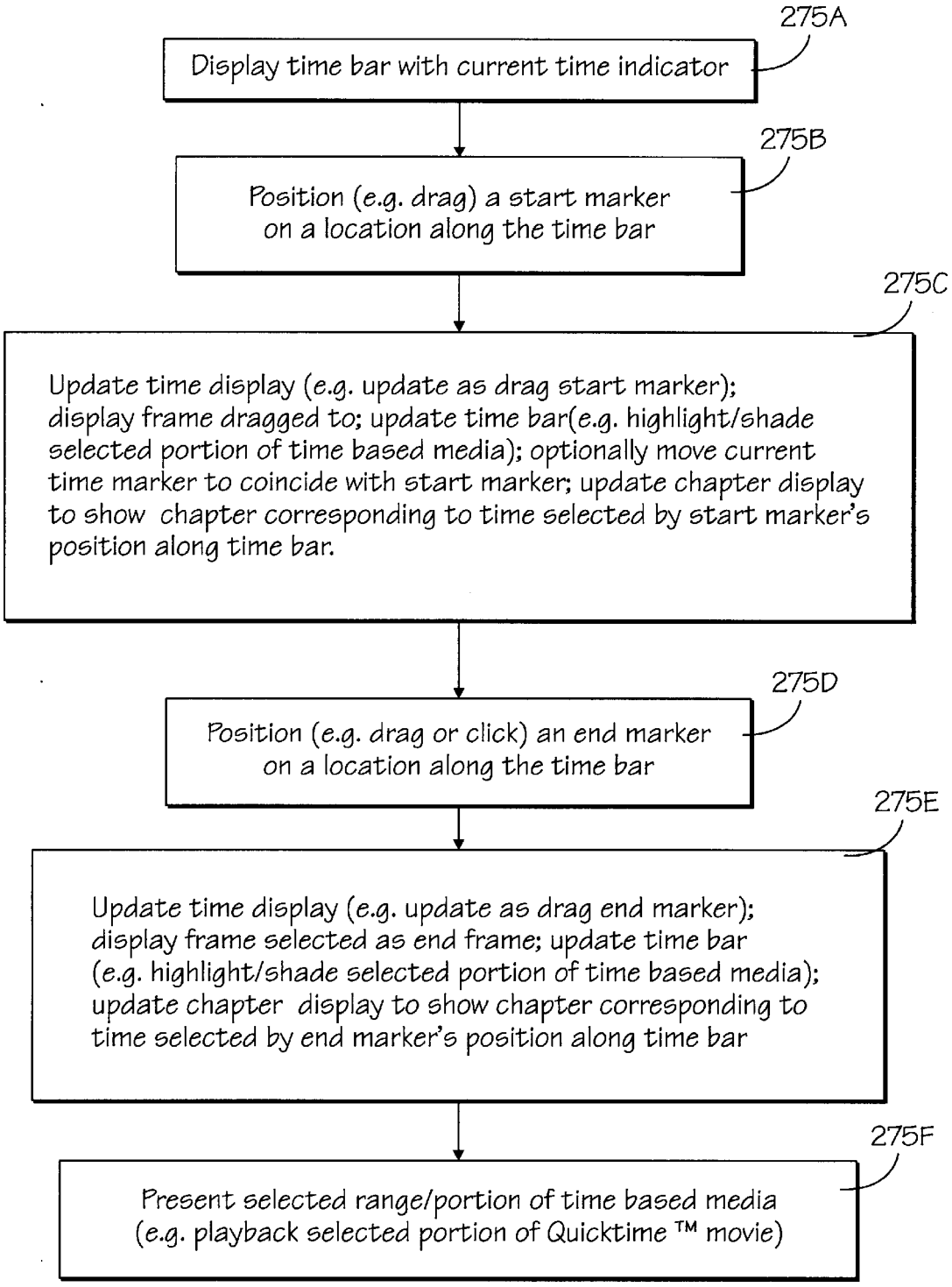
275A
Display time bar with current time indicator
275B
Position (e.g. drag) a start marker on a location along the time bar
275C
Update time display (e.g. update as drag start marker); display frame dragged to; update time bar(e.g. highlight/shade selected portion of time based media); optionally move current time marker to coincide with start marker; update chapter display to show chapter corresponding to time selected by start marker's position along time bar.
275D
Position (e.g. drag or click) an end marker on a location along the time bar
275E
Update time display (e.g. update as drag end marker); display frame selected as end frame; update time bar (e.g. highlight/shade selected portion of time based media); update chapter display to show chapter corresponding to time selected by end marker's position along time bar
275F
Present selected range/portion of time based media (e.g. playback selected portion of Quicktime ™ movie)

Fig. 8C

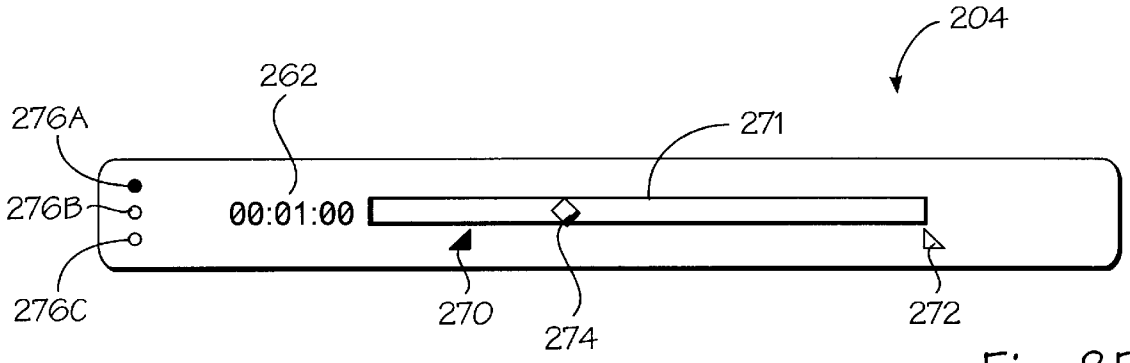

Fig. 8D

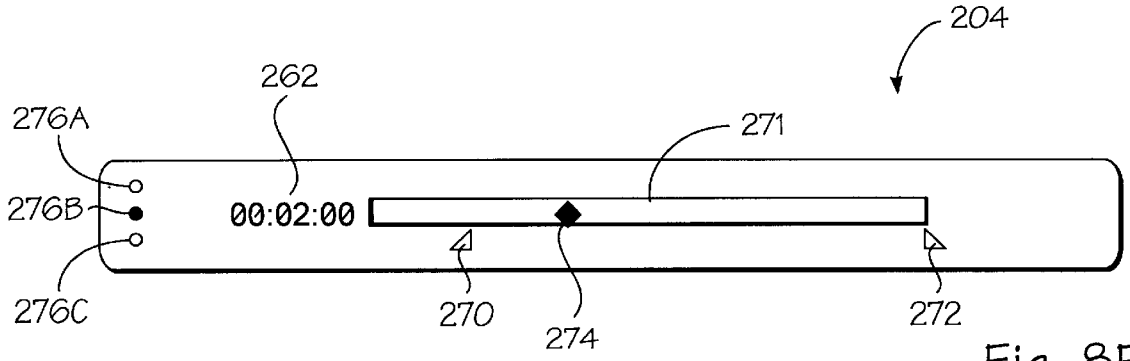

Fig. 8E

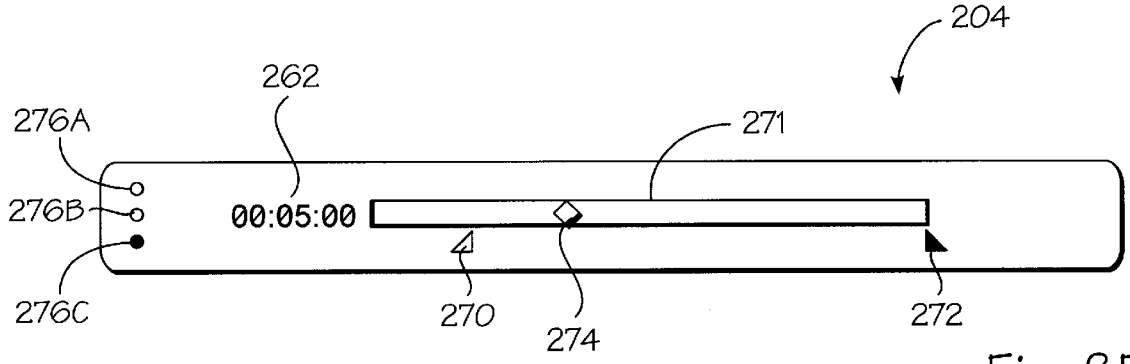

Fig. 8F

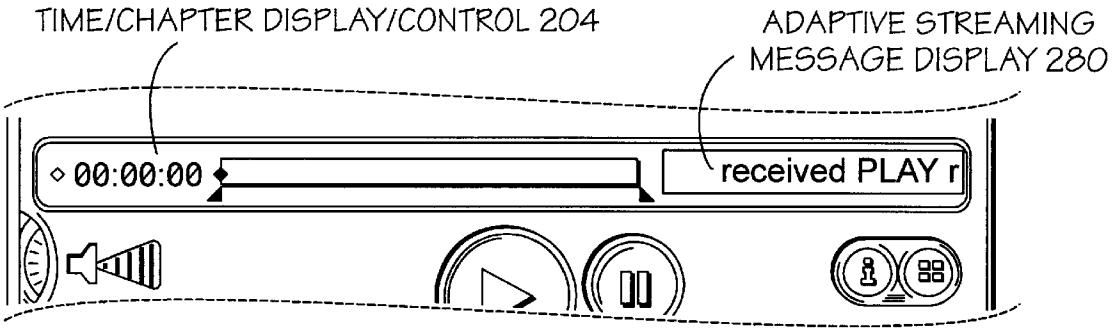
TIME/CHAPTER DISPLAY/CONTROL 204
ADAPTIVE STREAMING MESSAGE DISPLAY 280
00:00:00
received PLAY r

Fig. 9A

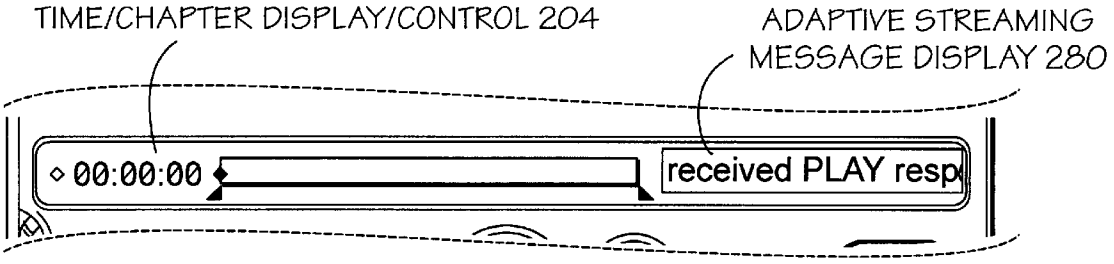
TIME/CHAPTER DISPLAY/CONTROL 204
ADAPTIVE STREAMING MESSAGE DISPLAY 280
00:00:00
received PLAY resp

Fig. 9B

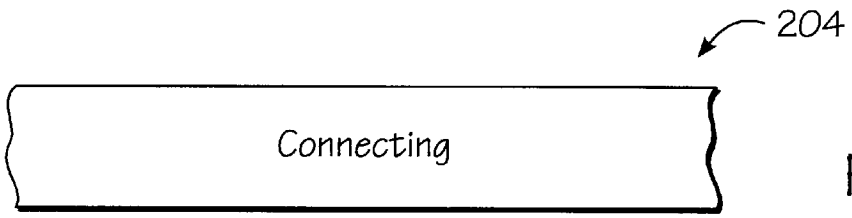

Fig. 9C

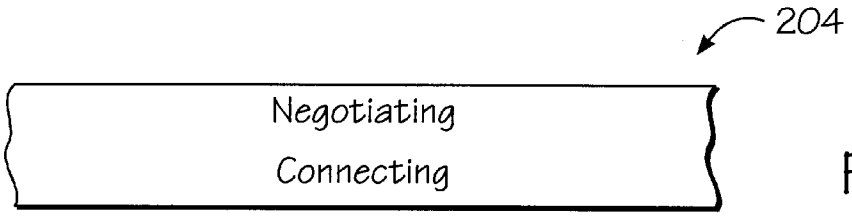

Fig. 9D

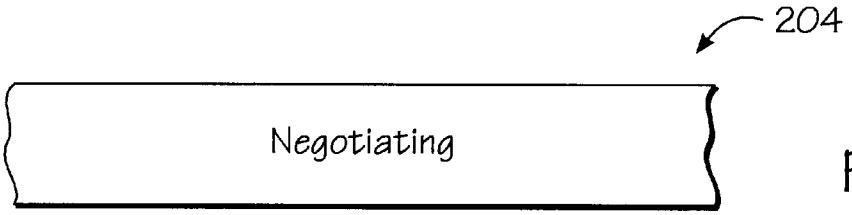

Fig. 9E

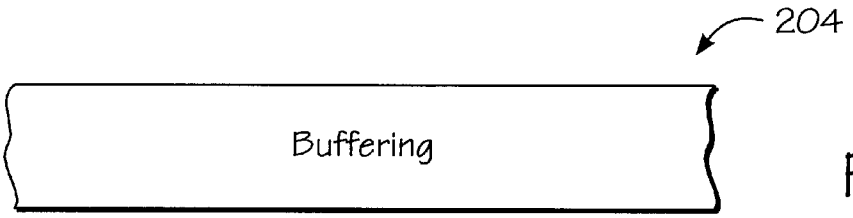

Fig. 9F

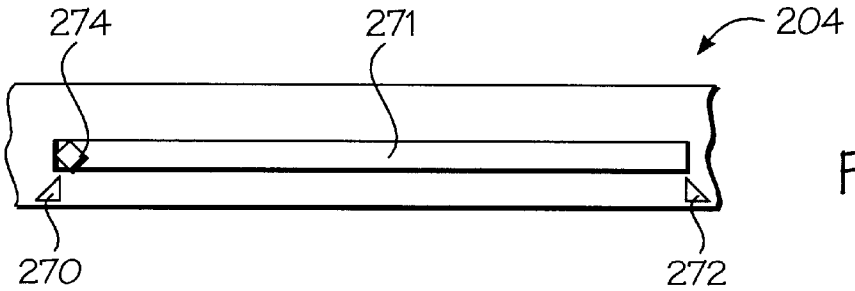

Fig. 9G

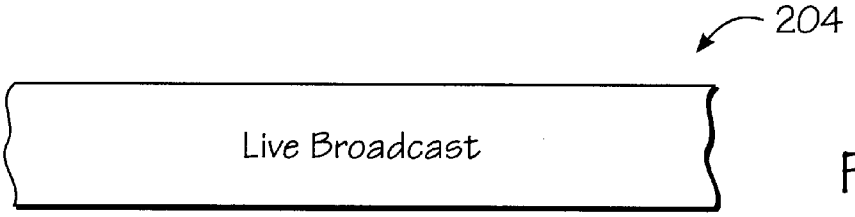

Fig. 9H

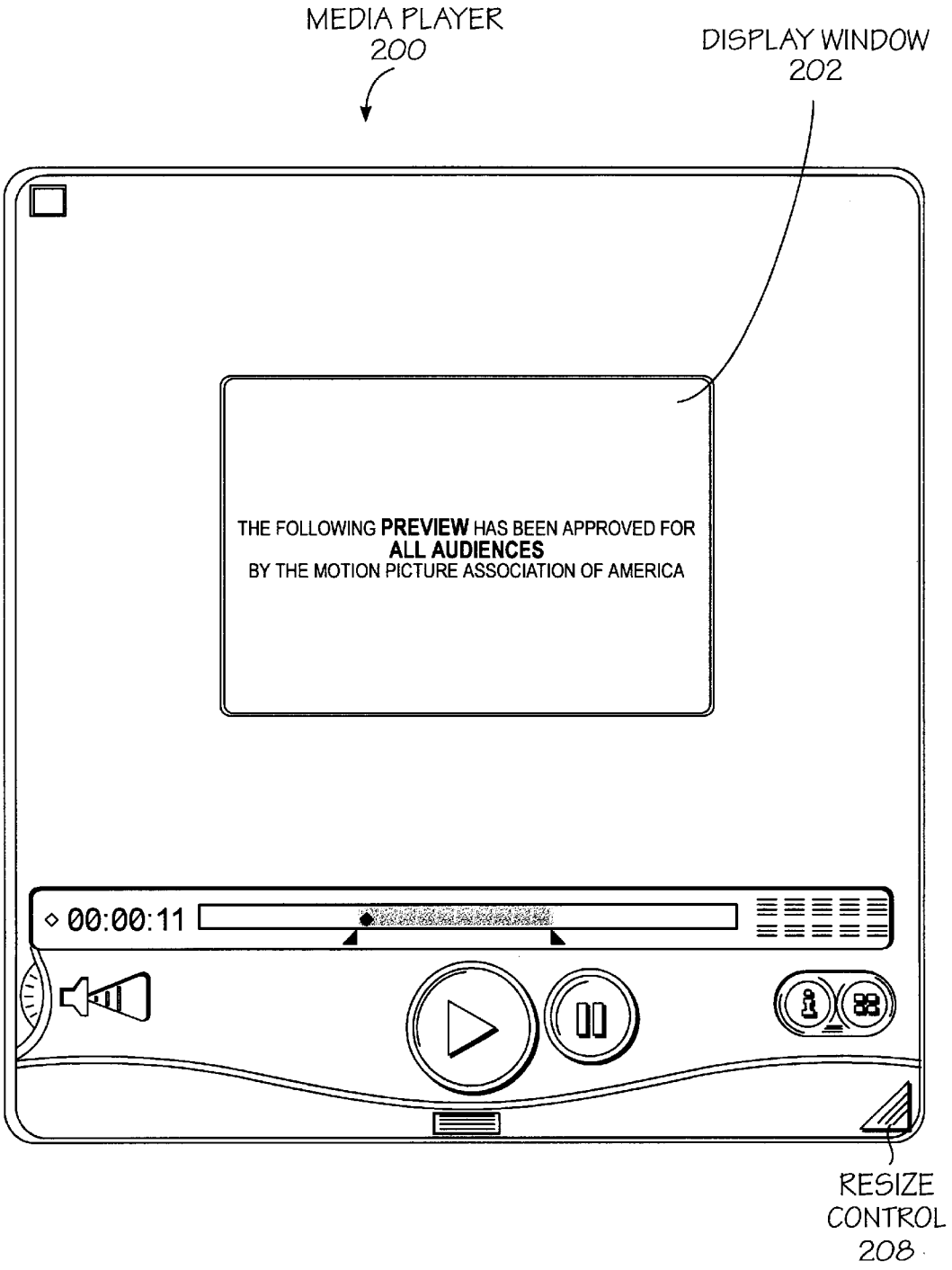
MEDIA PLAYER
200
DISPLAY WINDOW
202
THE FOLLOWING PREVIEW HAS BEEN APPROVED FOR
ALL AUDIENCES
BY THE MOTION PICTURE ASSOCIATION OF AMERICA
00:00:11
RESIZE
CONTROL
208

Fig. 10A

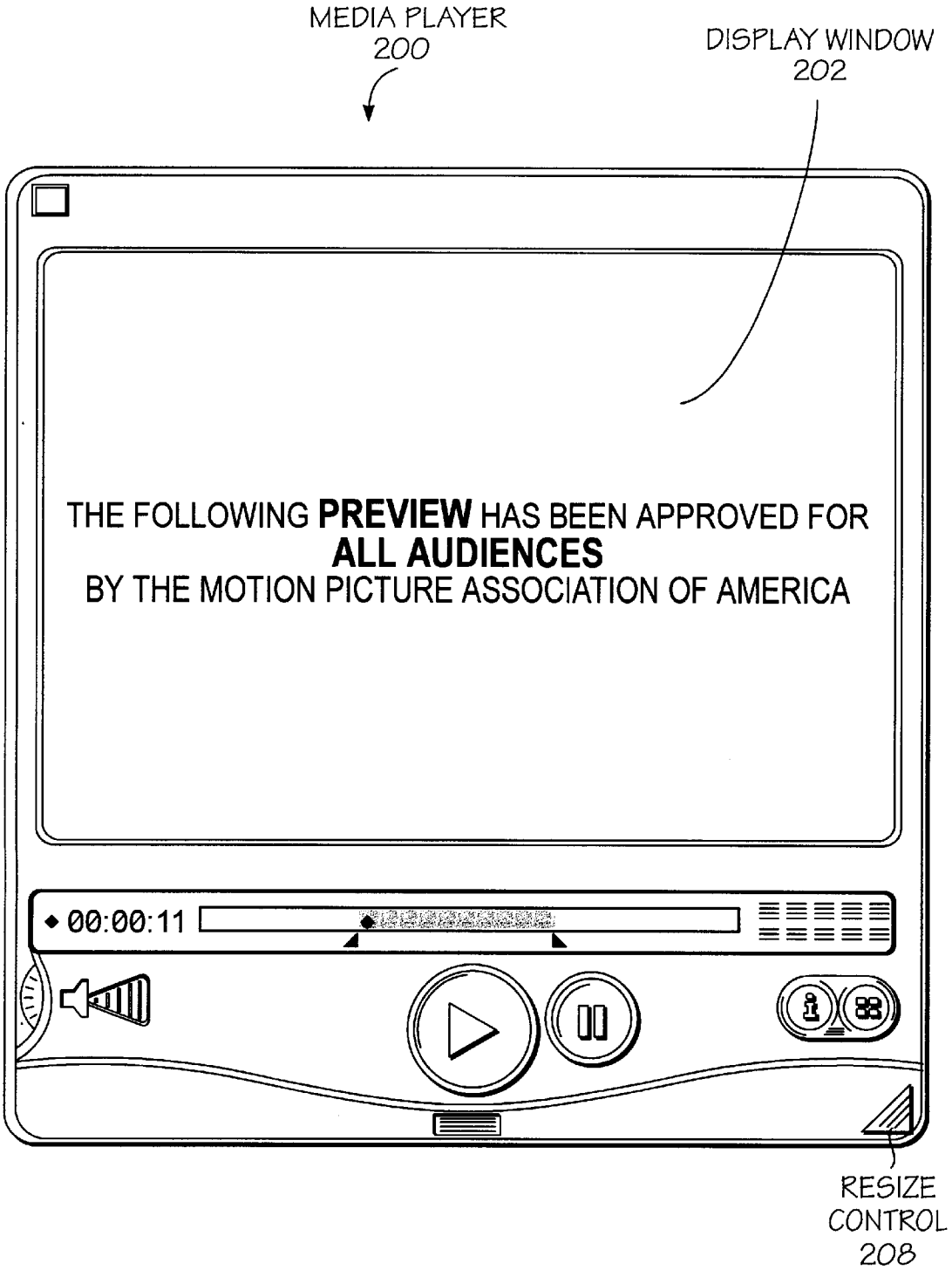
MEDIA PLAYER
200
DISPLAY WINDOW
202
THE FOLLOWING PREVIEW HAS BEEN APPROVED FOR
ALL AUDIENCES
BY THE MOTION PICTURE ASSOCIATION OF AMERICA
00:00:11
RESIZE
CONTROL
208

Fig. 10B

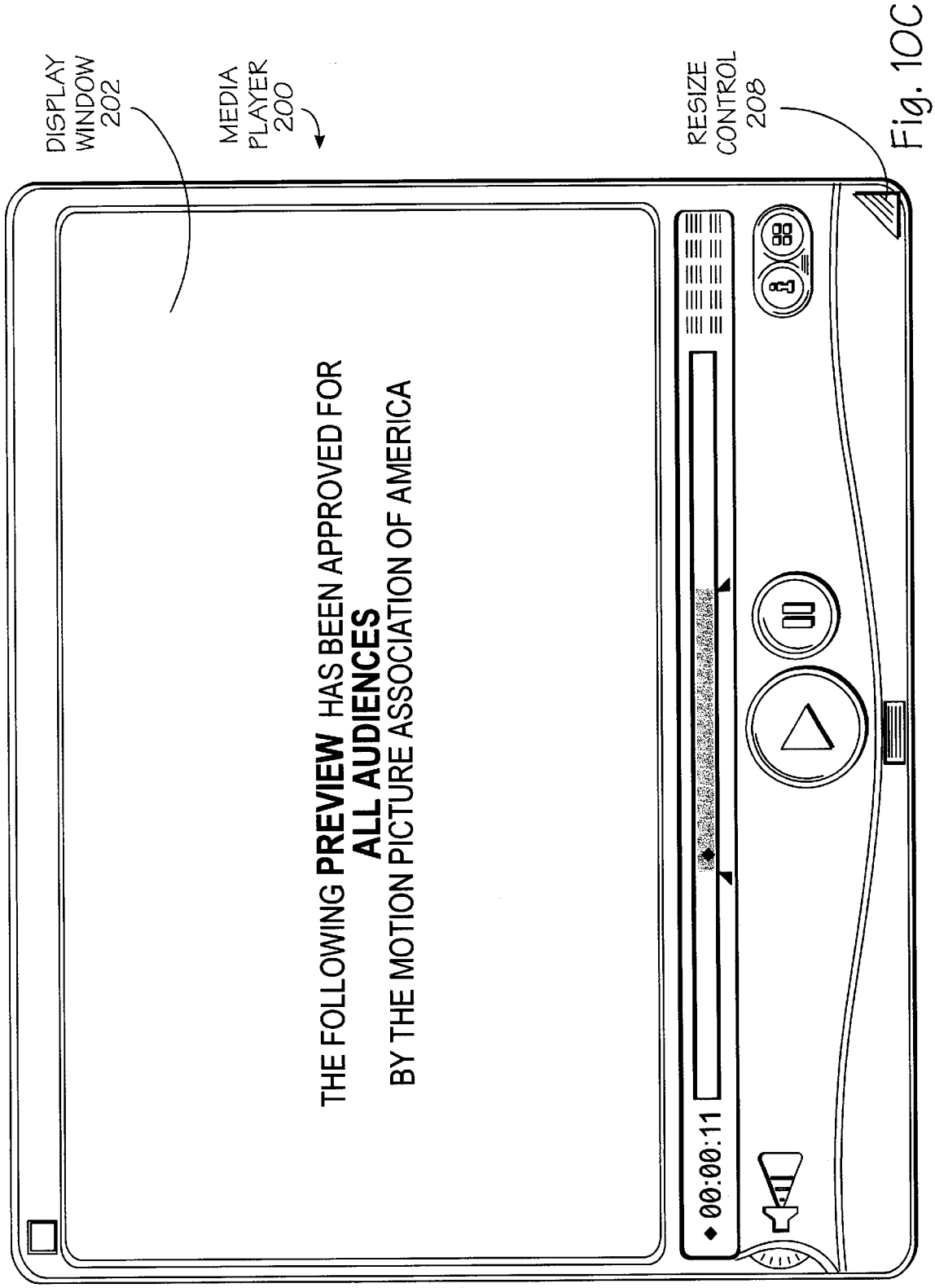
DISPLAY WINDOW 202
MEDIA PLAYER 200
RESIZE CONTROL 208
THE FOLLOWING PREVIEW HAS BEEN APPROVED FOR
ALL AUDIENCES
BY THE MOTION PICTURE ASSOCIATION OF AMERICA
00:00:11

Fig. 10C

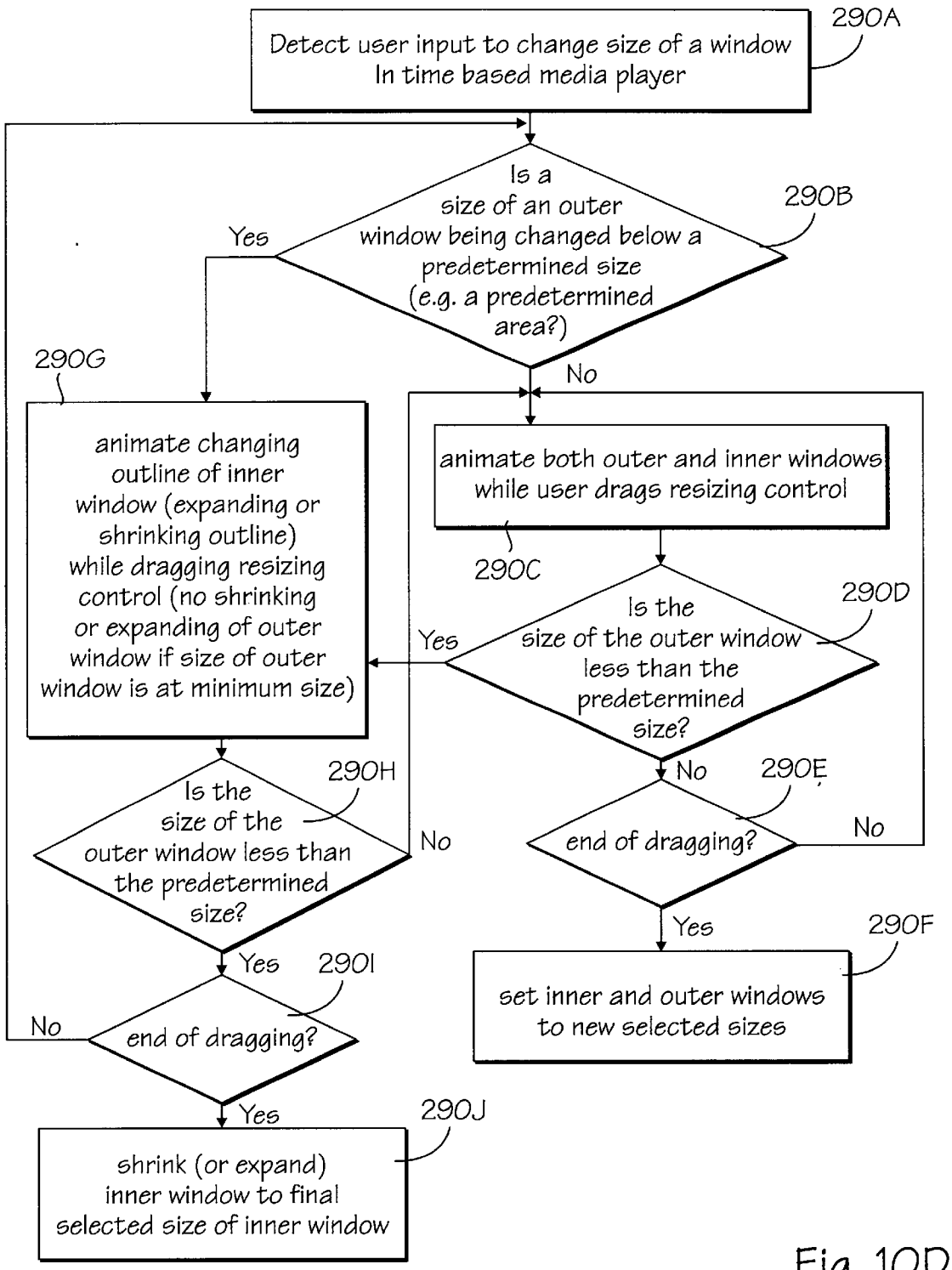
Detect user input to change size of a window In time based media player
290A
Is a size of an outer window being changed below a predetermined size (e.g. a predetermined area?)
290B
Yes
No
290G
animate changing outline of inner window (expanding or shrinking outline) while dragging resizing control (no shrinking or expanding of outer window if size of outer window is at minimum size)
animate both outer and inner windows while user drags resizing control
290C
Is the size of the outer window less than the predetermined size?
290D
Yes
No
290E
end of dragging?
No
Yes
290F
set inner and outer windows to new selected sizes
Is the size of the outer window less than the predetermined size?
290H
No
Yes
290I
end of dragging?
No
Yes
290J
shrink (or expand) inner window to final selected size of inner window

Fig. 10D

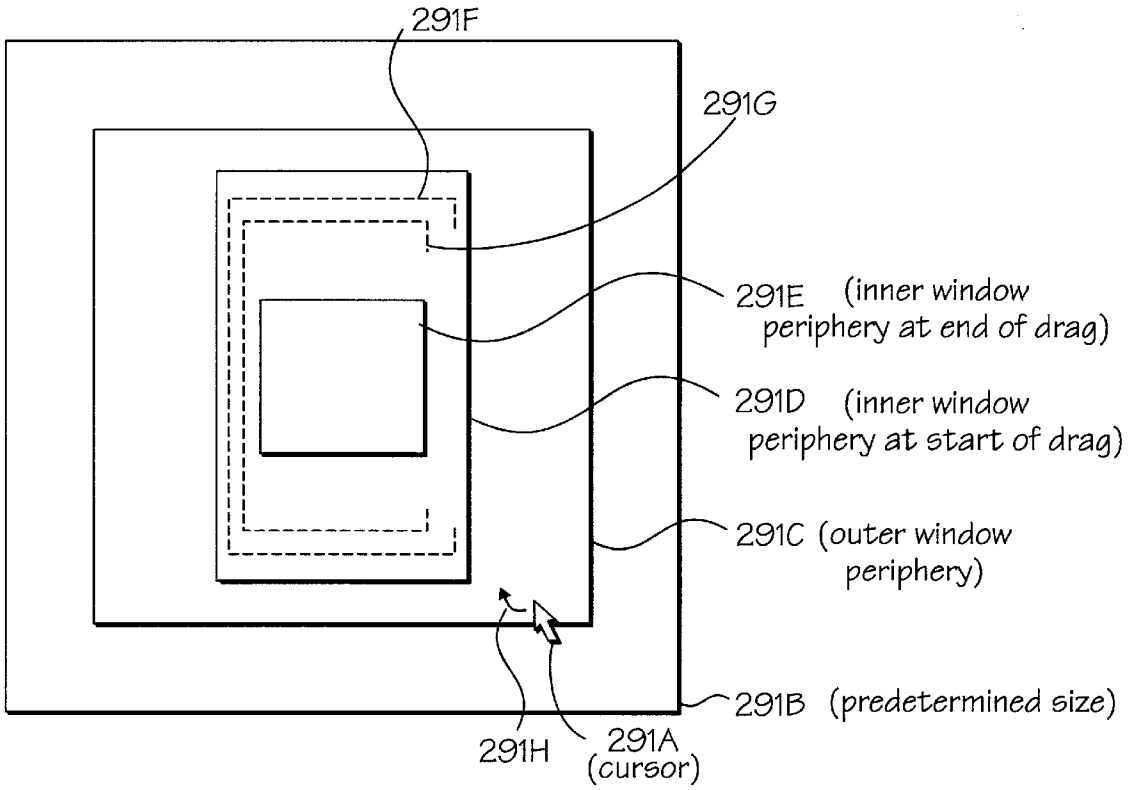

Fig. 10E

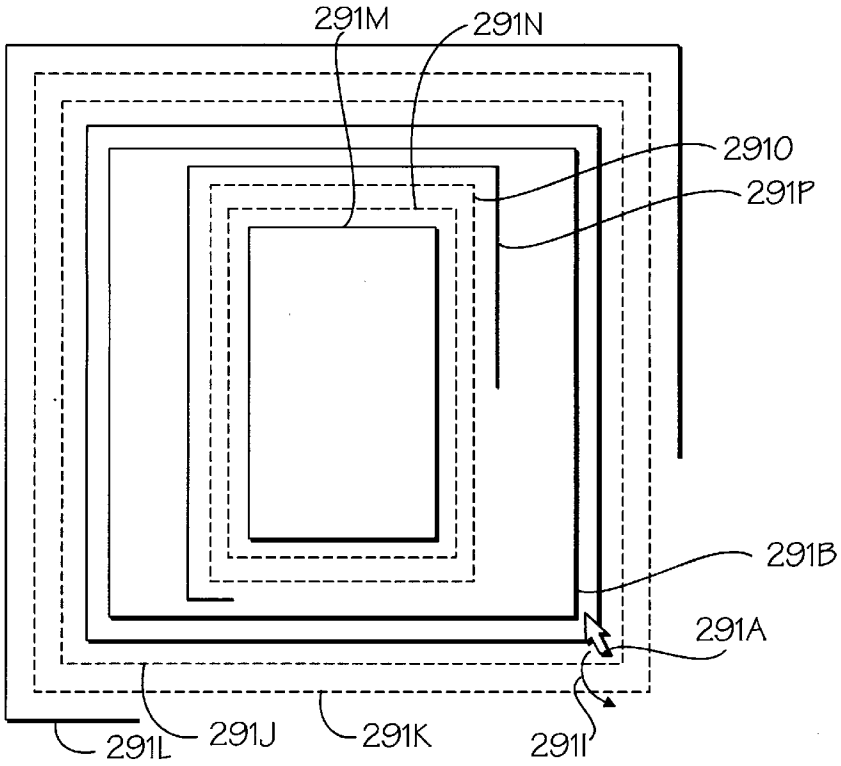

Fig. 10F

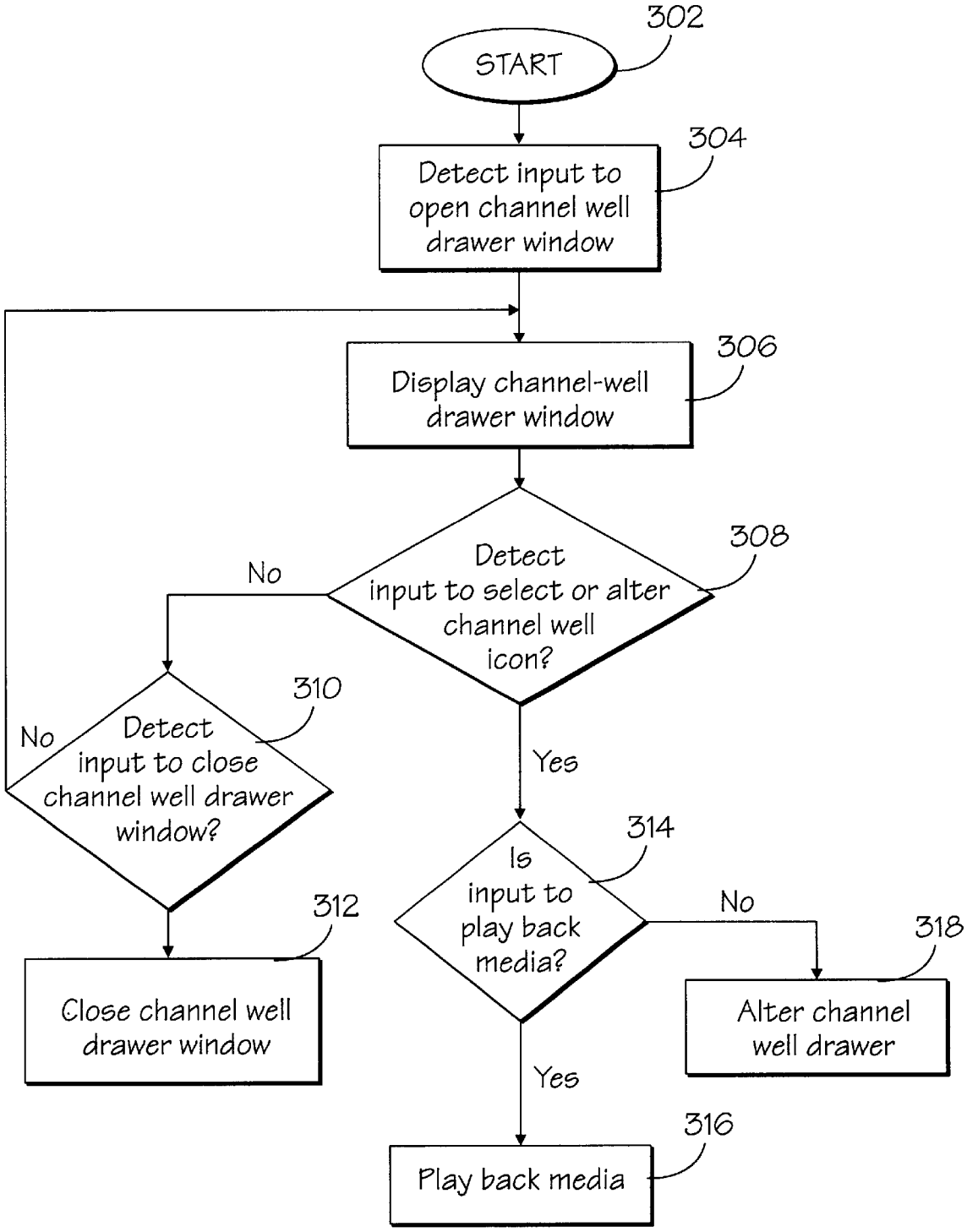
302
START
304
Detect input to open channel well drawer window
306
Display channel-well drawer window
308
Detect input to select or alter channel well icon?
No
310
Detect input to close channel well drawer window?
No
Yes
314
Is input to play back media?
No
318
Alter channel well drawer
312
Close channel well drawer window
Yes
316
Play back media

Fig. 11

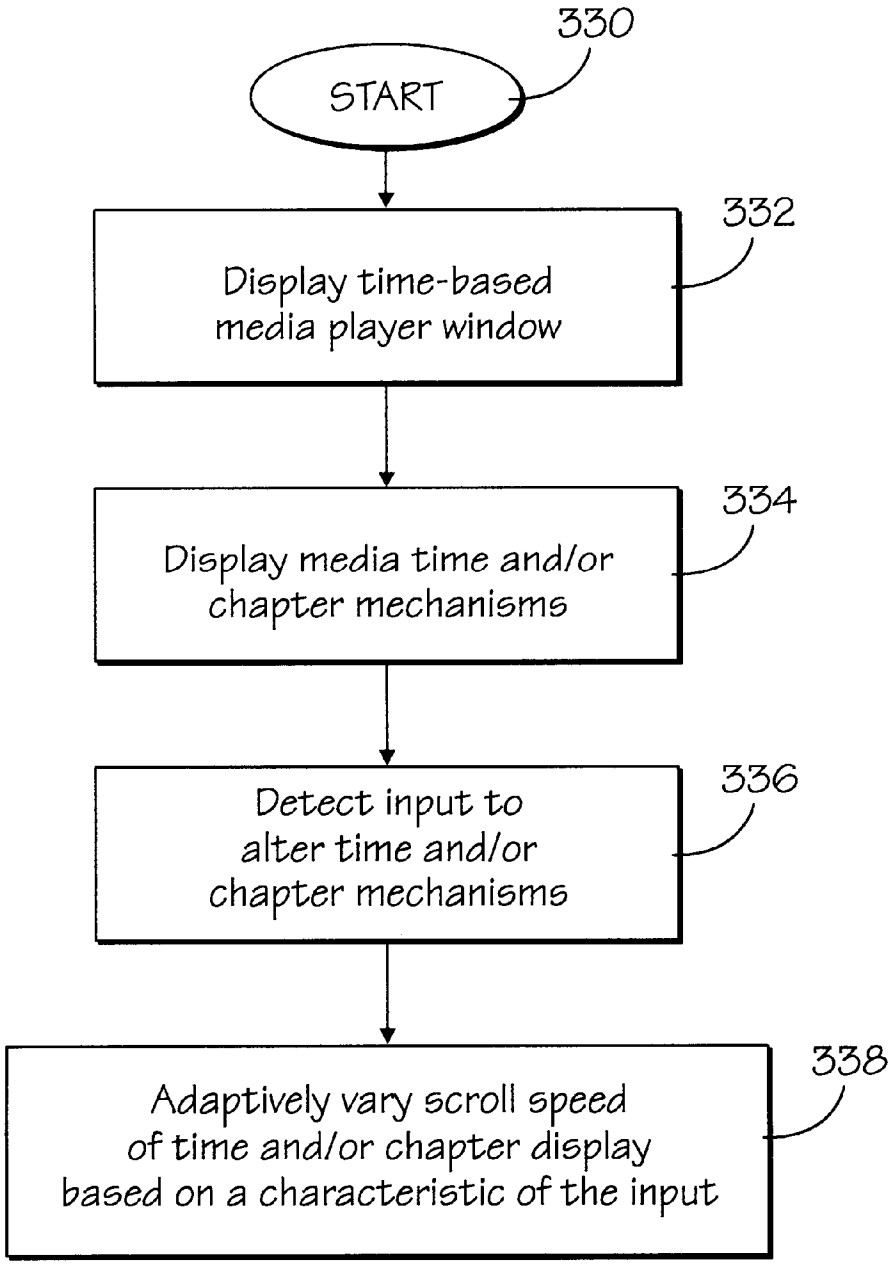
330
START
332
Display time-based media player window
334
Display media time and/or chapter mechanisms
336
Detect input to alter time and/or chapter mechanisms
338
Adaptively vary scroll speed of time and/or chapter display based on a characteristic of the input

Fig. 12A

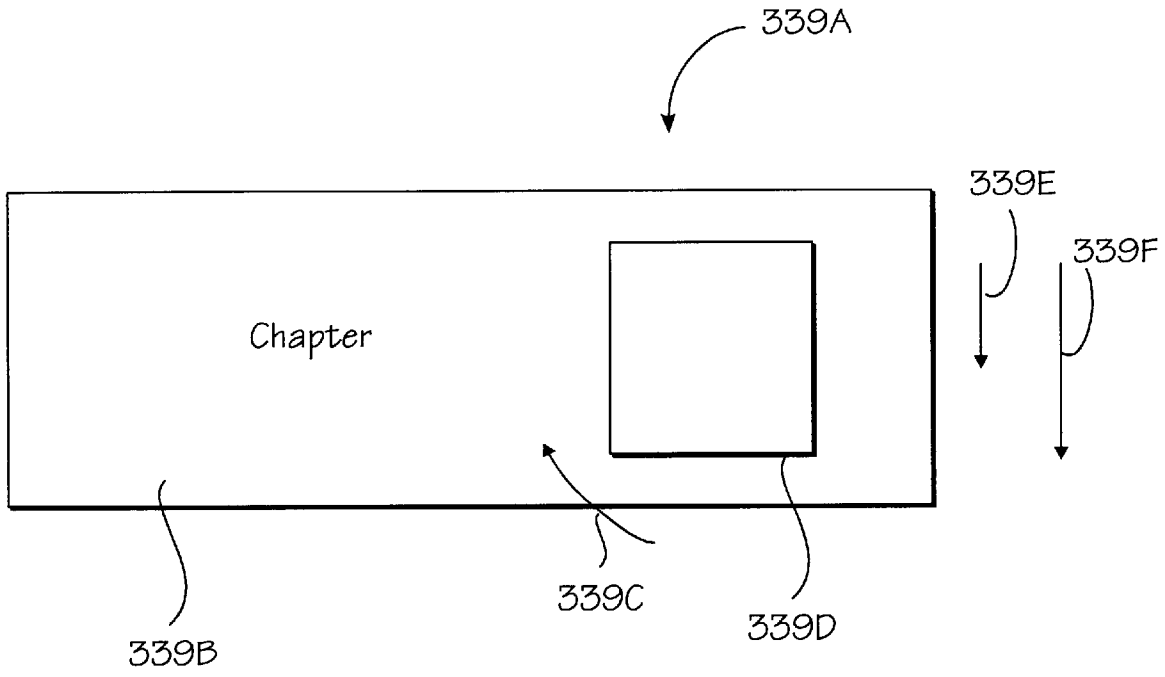

Fig. 12B

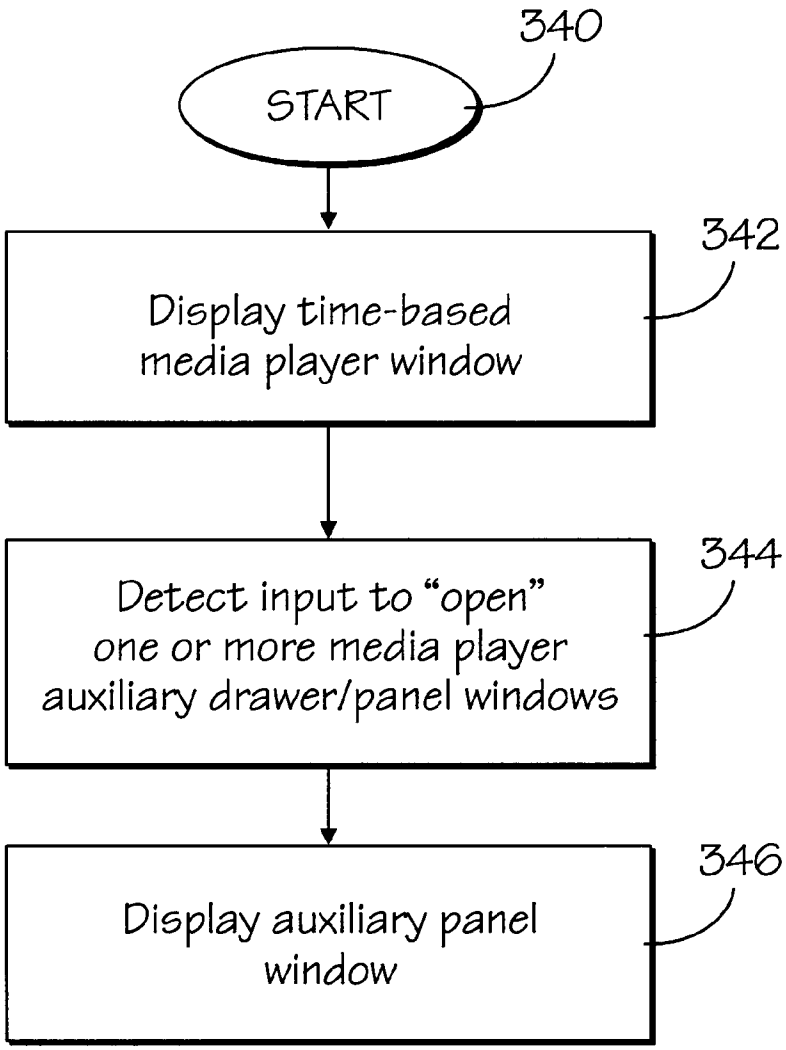
340
START
342
Display time-based media player window
344
Detect input to "open" one or more media player auxiliary drawer/panel windows
346
Display auxiliary panel window

Fig. 13

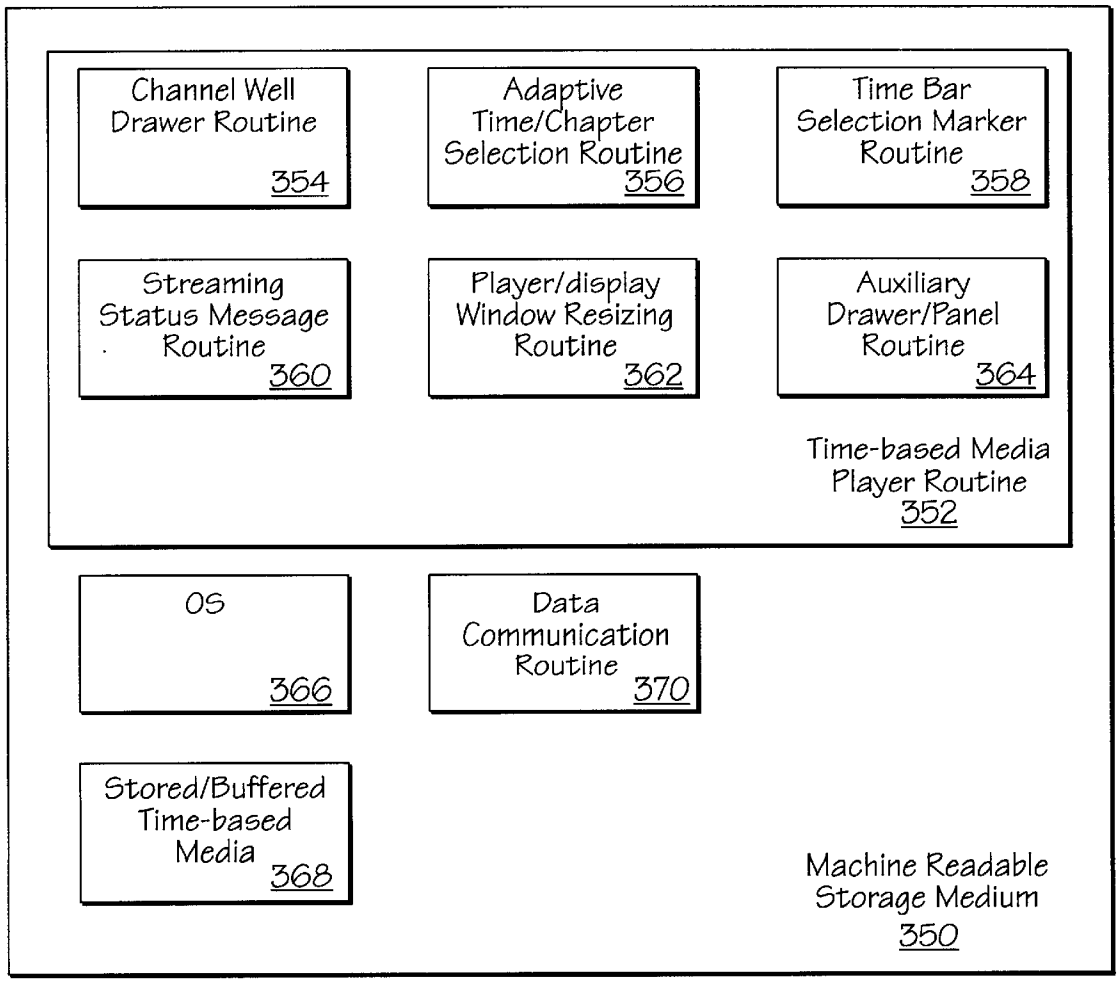
Channel Well Drawer Routine 354
Adaptive Time/Chapter Selection Routine 356
Time Bar Selection Marker Routine 358
Streaming Status Message Routine 360
Player/display Window Resizing Routine 362
Auxiliary Drawer/Panel Routine 364
Time-based Media Player Routine 352
OS 366
Data Communication Routine 370
Stored/Buffered Time-based Media 368
Machine Readable Storage Medium 350

Fig. 14

USER INTERFACE FOR PRESENTING MEDIA INFORMATION

CROSS REFERENCE TO RELATED APPLICATION

This application is a divisional continuation of co-pending non-provisional parent application Ser. No. 09/293,507 filed Apr. 15, 1999.

FIELD OF THE INVENTION

The present invention relates to user interfaces for processing (e.g., generating, storing, transmitting and/or receiving, playing back/displaying, editing, referencing, etc.) media information, such as time-based media data representing video and/or audio. In particular, the present invention provides an interactive digital processing system-controlled graphical user interface that provides functionality for play back or other processing of time-based and still media data.

INTRODUCTION AND BACKGROUND

There are a number of file structures used today to store time-based media: audio formats such as AIFF, video formats such as AVI, and streaming formats such as RealMedia. They are different at least in part because of their different focus and applicability. Some of these formats are sufficiently widely accepted, broad in their application, and relatively easy to implement, that they are used not only for content delivery but also as interchange formats such as the QuickTime™ file format. The QuickTime format is used today by many web sites serving time-based data; in many authoring environments, including professional ones; and on many multimedia CD ROM (e.g., DVD or CD-I) titles.

The QuickTime media layer supports the relatively efficient display and management of general multimedia data, with an emphasis on time-based material (video, audio, video and audio, motion graphics/animation, etc.). The media layer uses the QuickTime file format as the storage and interchange format for media information. The architectural capabilities of the layer are generally broader than the existing implementations, and the file format is capable of representing more information than is currently demanded by the existing QuickTime implementations. Furthermore, the QuickTime file format has structures to represent the temporal behavior of general time-based streams, a concept which covers the time-based emission of network packets, as well as the time-based local presentation of multimedia data.

Given the capabilities and flexibility provided by time-based media formats, it is desirable to provide a user interface that provides suitable functionality and flexibility for playback and/or other processing of time-based media in such formats.

Prior user interfaces for controlling the presentation of time-based media include user interfaces for the RealPlayers from RealNetworks of Seattle, Washington, user interfaces for the QuickTime MoviePlayers from Apple Computer, Inc. of Cupertino, Calif., and user interfaces for the Windows Media Players from Microsoft Corporation of Redmond, Wash. Also, there are a number of time-based media authoring systems which allow the media to be created and edited, such as Premiere from Adobe Systems of San Jose, Calif.

These prior user interfaces typically use "pop-up" or pull-down menus to display controls (e.g. controls for controlling playback) or to display a list of "favorites" or

"channels" which are typically predetermined, selected media (e.g. CNN or another broadcast source which is remotely located or a locally stored media source). While these lists or menus may be an acceptable way of presenting this information, the lists or menus may not be easily alterable and the alteration operations are not intuitive. Further, these lists or menus are separate from any window presenting the media and thus do not appear to be part of such window.

In some prior user interfaces, the various controls are displayed on a border of the same window which presents the media. For example, a time bar may be displayed on a window with controls for playback on the same window. While these controls are readily visible and available to a user, a large number of controls on a window causes the window to appear complex and tends to intimidate a novice user.

Some prior user interfaces include the ability to select, for presentation, certain chapters or sections of a media. LaserDisc players typically include this capability which may be used when the media is segmented into chapters or sections. A user may be presented with a list of chapters or sections and may select a chapter or section from the list. When this list contains a large number of chapters or sections, the user may scroll through the list but the speed of scrolling is fixed at a single, predetermined rate. Thus, the user's ability to scroll through a list of chapters is limited in these prior user interfaces.

Certain prior user interfaces which allow for editing of time-based media may include the ability of selecting a range of time of the media for editing in that selected range. However, these interfaces do not allow for the playback, through a single playback button, of a selected range of a media which has been selected by at least one dragging action of an indicator.

SUMMARY OF THE INVENTION

The present invention relates to various aspects for controlling and/or presenting information concerning time-based media, such as a movie.

In one aspect of the invention, an exemplary method of the invention allows for the selection of a presentation of time-based media. In this method, a graphical representation of a time line for the time-based media is displayed, and a graphical representation of a current time is also displayed along the graphical representation of the time line. A start graphical indicator and a stop graphical indicator is also displayed along the graphical representation of the time line. The start graphical indicator or the stop graphical indicator may be positioned, for example, by dragging, either of the indicator along the graphical representation of the time line to select a portion of the time-based media for presentation. In one typical example of this method, both the start graphical indicator and the stop graphical indicator may be dragged along the time line to select a portion of a movie for presentation.

According to another aspect of the present invention, a method is provided for generating an interface for display for controlling the processing of time-based media data. A first set of data representing a graphical user interface as a primary window is generated and displayed. A second set of data representing a drawer window is generated and contains objects such as representations (e.g. icons) of "favorites" or "channels" media. In a first display state, the drawer window is at least partially overlapped by the primary window, and in a second display state is at least partially viewable. In one

embodiment, the drawer window appears to be part of the primary window and slides under the primary window when the drawer window is closed. In one embodiment, when the primary window is moved, the drawer window moves with the primary window as part of the primary window. The drawer window, in one embodiment, provides a plurality of locations which are fixed and predetermined, each for displaying a time-based media icon (e.g. a thumbnail image) associated with a time-based media file. In one embodiment, the thumbnail image represents a favorite or channel time-based media, and the user may drag an icon into the drawer window or out of the drawer window in order to alter the contents of the drawer window.

According to another aspect of the present invention, a method is provided for generating a graphical user interface for control of processing of time-based media data. In an exemplary method according to this aspect, a first set of data representing the graphical user interface is generated and displayed as a primary window. A second set of data representing an auxiliary drawer window is generated for display. In a first display state, the auxiliary drawer window is at least partially overlapped by the primary window and in a second display state it is at least partially viewable. In one embodiment, the auxiliary drawer window appears to be part of the primary window and slides under the primary window when the auxiliary drawer is closed. When the primary window is moved in one embodiment, the auxiliary drawer window moves with the primary window as part of the primary window. In one embodiment, the auxiliary drawer window provides information relating to a time-based media file or controls for the control of a time-based media file.

According to another aspect of the present invention, a method is provided for controlling a graphical user interface which processes time-based media information. In one exemplary method of this aspect, input to change a portion of the graphical user interface is detected. This portion indicates tine relating to the time-based media. An input speed of the input is determined and a rate at which to change the portion is also determined, where the rate is dependent on the input speed. The information displayed in the portion is changed according to the rate which is dependent upon the input speed. In one particular example according to this aspect of the invention, a chapter selection mechanism allows the user to select different chapters within a movie by causing a chapter display area to have chapters scroll within the area. The speed of scrolling is controlled by the movement of a cursor or other input.

BRIEF DESCRIPTION OF THE DRAWINGS

FIG. **1** is a diagram of a network of computer systems in which media data may be processed, according to one embodiment of the present invention.

FIG. **2** is a block diagram of a digital processing system which may be used to process time-based media data, in accordance with one embodiment of the present invention.

FIG. **3**A shows a GUI (graphical user interface), and in particular, a time-based media player display window for displaying, controlling, and/or otherwise processing time-based media data, according to one embodiment of the invention.

FIG. **3**B shows an example of an audio-only window for a time-based media player.

FIG. **4** illustrate the time-based media player of FIG. **3**A depicting a favorite/channel drawer that is partially open (i.e., partially displayed), according to one embodiment of the invention.

FIG. **5**A is a diagram of a time-based media player providing a favorite/channel drawer generated as a GUI, according to one embodiment of the invention.

FIG. **5**B shows an example of a user interface for altering the icons in a drawer of a player window according to one embodiment of the invention.

FIG. **6**A is a diagram of time-based media player providing an information panel (or drawer) window generated as GUI, according to one embodiment of the invention.

FIG. **6**B is a diagram of a time-based media player providing a control panel (or drawer) window generated as a GUI, according to one embodiment of the invention.

FIG. **7**A illustrates a time/chapter display control of a time-based media player generated as a GUI, and in particular, FIG. **7**A illustrates an adaptive chapter display/control, according to one embodiment of the invention.

FIG. **7**B illustrates a time/chapter display control of a time-based media player generated as a GUI, and in particular, FIG. **7**B illustrates an adaptive chapter display/control, according to one embodiment of the invention.

FIGS. **7**C–**7**J show the scrolling capabilities of the chapter display area **260** according to one embodiment of the invention.

FIG. **8**A illustrates a GUI mechanism of a time-based media player for selecting a range of time within a time-based media file, according to one embodiment of the invention.

FIG. **8**B illustrates a GUI mechanism of a time-based media player for selecting a range of time within a time-based media file, according to one embodiment of the invention.

FIG. **8**C illustrates a flowchart which shows a method for selecting a range of time for playback of a time-based media file.

FIGS. **8**D–**8**F show an example of a timecode mode selector interface which may be used with the current time, start and end markers.

FIG. **9**A illustrates an adaptive streaming status message display of a time-based media player generated as a GUI, according to one embodiment of the invention.

FIG. **9**B illustrates an adaptive streaming status message display of a time-based media player generated as a GUI, according to one embodiment of the invention.

FIGS. **9**C–**9**H show another example of a status message display for a media player according to the present invention.

FIGS. **10**A–**10**C illustrate resizing a time-based media player generated as a GUI and/or a display window for displaying time-based images, according to one embodiment of the invention.

FIG. **10**D is a flowchart which shows one method for controlling the display of a time-based media player during a resizing operation.

FIGS. **10**E and **10**F show examples of resizing operations.

FIG. **11** is a flow diagram illustrating a method for providing a favorite/channel drawer window for a time-based media player generated as a GUI, according to one embodiment of the invention.

FIG. **12**A is a flow diagram illustrating a method for providing adaptive chapter/time selection for play back or other processing of time-based media in a GUI, according to one embodiment of the invention.

FIG. **12**B shows an example of a chapter selection interface which adaptively scrolls a chapter indicator (e.g. a

chapter number or name) in response to user input (e.g. speed of cursor movement).

FIG. **13** is a flow diagram illustrating a method for providing auxiliary drawers/panels for a time-based media player generated as a GUI, according to one embodiment of the invention.

FIG. **14** is a block diagram of a machine-readable medium storing executable code and/or other data to provide one or a combination of mechanisms for play back or other processing of time-based media in a GUI, according to one embodiment of the invention.

DETAILED DESCRIPTION

The present invention provides methods and apparatuses for processing media information. In one embodiment of the present invention, a graphical user interface (GUI) is provided that includes a number of features for referencing, playing back, and/or otherwise processing time-based media information (e.g., video, animated graphics, and/or audio, etc.). In one embodiment, the GUI, also sometimes referred to as a media player, provides functionality for processing time-based media in the QuickTime format, such as QuickTime "movies," which typically include audio and motion video information. Although the present invention is described with reference to the QuickTime media data format, it will be appreciated that the invention may also be used in a variety of environments, in conjunction with other media data formats, and with various types of data processing systems having a number of different types of architectures. Thus, the invention should not be limited to the systems, media data formats, or architectures disclosed herein, which are meant only to provide an understanding of the invention, whose scope is defined by the claims which follow.

HARDWARE OVERVIEW

FIG. **1** is a diagram of a network of computer systems in which media data may be processed, according to one embodiment of the present invention. As shown in FIG. **1**, a network **100** includes a number of client computer systems that are coupled together through an Internet **122**. It will be appreciated that the term "Internet" refers to a network of networks. Such networks may use a variety of protocols for exchange of information, such as TCP/IP, ATM, SNA, SDI, etc. The physical connections of the Internet and the protocols and communication procedures of the Internet are well known to those in the art.

Access to the Internet **122** is typically provided by Internet service providers (ISPs), such as the ISP **124** and the ISP **126**. Users on client systems, such as the client computer systems **102**, **104**, **118**, and **120**, generally obtain access to the Internet through Internet service providers, such as ISPs **124** and **126**. Access to the Internet may facilitate transfer of information (e.g., email, text files, media files, etc.) between two or more digital processing systems, such as the client computer systems **102**, **104**, **118**, and **120** and/or a Web server system **128**. For example, one or more of the client computer systems **102**, **104**, **118**, and **120** and/or the Web server **128** may provide media data (e.g., video and audio, or video, or audio) to another one or more of the client computer systems **102**, **104**, **118**, and **120** and/or the Web server **128**. For example, in one embodiment of the invention, one or more of the client computer systems **102**, **104**, **118** and **120** may request play-back of time-based media data that may be stored at a remote location, such as the Web server **128**. In the case of remote storage, the data may be transferred as a file (e.g. downloaded) and then played back after transferring the file or, if a streaming media system is available, the data may be played back at the client while the transfer occurs. In another embodiment, the requested time-based media data may be stored locally at the client computer system **102**, **104**, **118**, and/or **120**. In the case of local storage, the client system may play back time-based media using a playback system (e.g. a QuickTime Player) without requiring a network connection.

The Web server **128** typically includes at least one computer system to operate with one or more data communication protocols, such as the protocols of the World Wide Web, and as such, is typically coupled to the Internet **122**. Optionally, the Web server **128** may be part of an ISP which may provide access to the Internet and/or other network(s) for client computer systems. The client computer systems **102**, **104**, **118**, and **120** may each, with appropriate web browsing software, access data, such as HTML documents (e.g., Web pages), which may be provided by the Web server **128**. Such data may provide media, such as QuickTime movies, which may be played back/presented by the client computer systems **102**, **104**, **118**, and **120**.

The ISP **124** provides Internet connectivity to the client computer system **102** via a modem interface **106**, which may be considered as part of the client computer system **102**. The client computer systems **102**, **104**, **118**, and **620** may be a conventional data processing system, such as a Macintosh computer, a "network" computer, a handheld/portable computer, a Web TV system, or other types of digital processing systems (e.g., a cellular telephone having digital processing capabilities).

Similarly, the ISP **126** provides Internet connectivity for the client computer systems **104**, **118** and **120**. However, as depicted in FIG. **1**, such connectivity may vary between various client computer systems, such as the client computer systems **102**, **104**, **118**, and **120**. For example, as shown in FIG. **1**, the client computer system **104** is coupled to the ISP **126** through a modem interface **108**, while the client computer systems **118** and **120** are part of a Local Area Network (LAN). The interfaces **106** and **108**, shown as modems **106** and **108**, respectively, may represent an analog modem, an ISDN modem, a cable modem, a satellite transmission interface (e.g., "Direct PC"), a wireless interface, or other interface for coupling a digital processing system, such as a client computer system, to another digital processing system. The client computer systems **118** and **120** are coupled to a LAN bus **112** through network interfaces **114** and **116**, respectively. The network interfaces **114** and **116** may be an Ethernet-type, Asynchronous Transfer Mode (ATM), or other type of network interface. The LAN bus is also coupled to a gateway digital processing system **110**, which may provide firewall and other Internet-related services for a LAN. The gateway digital processing system **110**, in turn, is coupled to the ISP **126** to provide Internet connectivity to the client computer systems **118** and **120**. The gateway digital processing system **110** may, for example, include a conventional server computer system. Similarly, the Web server **128** may, for example, include a conventional server computer system.

The system **100** may allow one or more of the client computer systems **102**, **104**, **118**, and **120** and/or the Web server **628** to provide time-based media data (e.g., video and audio, or video, or audio) to another one or more of the client computer systems **102**, **104**, **118**, and **120** and/or the Web server **128**. As described below, the present invention facilitates playing back and other functionality for processing the media data.

FIG. **2** is a block diagram of a digital processing system which may be used to process time-based media data, in accordance with one embodiment of the present invention. For example, the digital processing system **150** shown in FIG. **2** may be used as a client computer system (e.g., the client computer system **102**, **104**, **118**, and/or **120**), a Web server system (e.g., the Web server system **128**), a conventional server system, etc. Furthermore, the digital processing system **150** may be used to perform one or more functions of an Internet service provider, such as the ISP **124** or **126**. The digital processing system **150** may be interfaced to external systems through a modem or network interface **168**. It will be appreciated that the modem or network interface **168** may be considered as part of the digital processing system **150**. The modem or network interface **168** may be an analog modem, an ISDN modem, a cable modem, a token ring interface, a satellite transmission interface, a wireless interface, or other interface(s) for providing a data communication link between two or more digital processing systems.

The digital processing system **150** includes a processor **152**, which may represent one or more processors and may include one or more conventional types of such processors, such as a Motorola PowerPC processor, an Intel Pentium (or x86) processor, etc. A memory **154** is coupled to the processor **152** by a bus **156**. The memory **154** may be a dynamic random access memory (DRAM) and/or may include static RAM (SRAM). The processor may also be coupled to other types of storage areas/memories (e.g., cache, Flash memory, disk, etc.), which could be considered as part of the memory **154** or separate from the memory **154**.

The bus **156** further couples the processor **152** to a display controller **158**, a mass memory **162**, the modem or network interface **168**, and an input/output (I/O) controller **164**. The mass memory **162** may represent a magnetic, optical, magneto-optical, tape, and/or other type of machine-readable medium/device for storing information. For example, the mass memory **162** may represent a hard disk, a read-only or writeable optical CD (e.g., CD ROM, DVD), etc. The display controller **158** controls in a conventional manner a display **160**, which may represent a cathode ray tube (CRT) display, a liquid crystal display (LCD), a plasma display, or other type of display device. The I/O controller **164** controls I/O device(s) **166**, which may include one or more keyboards, mouse/trackball or other pointing devices, microphones (for speech recognition capabilities), magnetic and/or optical disk drives, printers, scanners, digital cameras, microphones, etc.

It will be appreciated that the digital processing system **150** represents only one example of a system, which may have many different configurations and architectures, and which may be employed with the present invention. For example, Macintosh and other systems often have multiple busses, such as a peripheral bus, a dedicated cache bus, etc. On the other hand, a network computer, which may be used as a digital processing device of the present invention, may not include, for example, a hard disk or other mass storage device, but may receive routines and/or data from a network connection, such as the modem or interface **168**, to be processed by the processor **152**. Similarly, a Web TV system, which is known in the art, may be considered to be a digital processing system of the present invention, but such a system may not include one or more I/O devices, such as those described above with reference to I/O device(s) **166**. Additionally, a portable communication and data processing system, which may employ a cellular telephone and/or paging capabilities, may be considered a digital processing system which may be used with the present invention.

In the system **150** shown in FIG. **2**, the mass memory **162** (and/or the memory **154**) may store time-based media (e.g., video, audio, movies, etc.) which may be processed according to the present invention. Alternatively, media data may be received by the digital processing system **150**, for example, via the modem or network interface **168**, and stored and/or presented by the digital processing system **150**, for example, via the display **160** and/or I/O device(s) **166**, which may include audio speakers, headphones, and/or other media playback output devices. In one embodiment, packetized media data may be transmitted across a data communication network, such as a LAN and/or the Internet, in accordance with the QuickTime format to be processed by the system **150** in accordance with the present invention. On the other hand, the digital processing system **150** may locally store time-based media data in the mass memory **162**, the memory **164**, and/or another machine-readable medium accessible by the digital processing system **150**, as well as executable code that provides functionality for processing time-based media data in accordance with the present invention.

OVERVIEW OF ONE EMBODIMENT OF THE INVENTION

FIG. **3**A shows a GUI, and in particular, a time-based media player display window for displaying, controlling, and/or otherwise processing time-based media data, according to one embodiment of the invention.

As shown, a time-based media player (media player) **200**, which is typically displayed as a window on a display of a computer or other digital processing system, includes a number of display and control functions for processing time-based media data, such as a QuickTime movie. The player window **200** may be "closed" using a close box **222** (e.g. the user may "click" on this box to close the window by positioning a cursor on the box and depressing and releasing a button, such as a mouse's button while the cursor remains positioned on the close box).

The media player **200** includes a movie display window **202** for displaying a movie or other images associated with time-based media. In addition, a time/chapter display and control region **204** of the media player **200** provides functionality for displaying and/or controlling time associated with a particular time-based media file (e.g., a particular movie processed by the player **200**). As described below, a time-based media file may be sub-indexed into "chapters" or sections which correspond to time segments of the time-based media file, and which chapters may also be titled. As such, a user may view or select a time from which, or time segment in which, to play back a time-based media file. Such selection, as described below, may be based on a particular chapter name and/or a particular time relative to the time-length of the time-based media file.

The media player **200** includes a number of other mechanisms for controlling playback, display, and/or other processing of time-based media. For example, a volume dial **220** controls the audio output level (e.g., through speakers, headphones, or other audio output device). In one embodiment, a cursor controlled through a pointing device (e.g., a mouse, trackball, touchpad, arrow keys of a keyboard, etc.) or speech recognition enables a user to control the dial **220**, as well as other features of the media player **200**. For example, in one embodiment, a user may place the cursor upon the volume dial **200** using a pointing device, and control the audio output level/volume by holding down the "click" button of the pointing device (to select

or "activate" the volume dial icon **220**) and then moving the cursor up or down to change the level/volume up or down, respectively. In one embodiment, a volume level display/control **218** displays the current volume level by highlighting on the display one or more graphical "level lines," wherein when more lines are highlighted, the higher the volume. Thus, as the dial **220** is "turned up" to increase the audio output level, more lines will become highlighted, and conversely, when the dial **220** is "turned down" to decrease the volume, less lines become highlighted in the volume level display control **218**. In the embodiment depicted in FIG. **3**A, the user may also vary the audio output level/volume by placing the cursor on the volume level/display control **218**, activating the icon (e.g., by pressing and holding a mouse or other pointing device selection/click button), and moving the cursor to the right (to increase the volume) or to the left (to decrease the volume), in which case the dial **220** will turn up or down, respectively, while the level lines of the volume level/display control **218** will be highlighted accordingly. Also, in one embodiment, the user may select (e.g. "click" on) the audio icon **217** to turn off the audio portion of a presentation. As shown, the media player **200** also includes a play button **216** and a pause button **212**, which allow play back and pausing of a (currently selected) time-based media file.

As described below, the present invention provides secondary or "drawer" or "panel" or tray windows to be "opened" from the primary or media player **200** window. As such, the drawer or panel or tray windows, when opened or closed in response to user input, for example, will resemble drawers that open or close from the media player **200** window, as shown in FIGS. **4**, **5**A, **6**A and **6**B. These drawer windows (e.g. the favorite/channel drawer window **230**), in one embodiment, are part of the primary window and are moved with the primary window and are opened or closed with the primary window. That is, when the primary window is moved around the desktop (on the display screen), the drawer window is moved with the primary window and appears attached to the primary window. When the primary window is first opened, the handle portion of the drawer window is opened and is displayed and appears attached to the primary window. When the primary window is closed (e.g. removed from the display screen), the drawer window is closed. The drawer window, in one embodiment, typically includes a handle portion which includes a drawer control (e.g. drawer control **214**) which may be used to slide the drawer window open (e.g. display favorite/channel icons) or, if the drawer window is opened, to close the drawer window so that only the handle portion, typically attached to the primary window on an edge of the primary window, is displayed. The handle portion of the drawer window may also include other controls, such as a resize control **208**. In one embodiment, objects, such as icons representing media (e.g. "favorites" or "channels"), may be selected from regions outside of the drawer window (e.g. icons on the desktop may be selected) and may be then dragged to a predetermined (e.g. "tiled") region inside of the drawer window. This causes the selected object, in one exemplary embodiment, to become a "favorite" or "channel." Similarly, an object (e.g. an icon representing a favorite or channel media) may be selected within the drawer window and dragged outside of the window (e.g. dragged to the desktop or to a folder on the desktop or dragged to an icon representing a trash or waste receptacle or function). This has the effect of either creating an alias or short cut for the selected object (when dragged to a folder) or deleting the object from the drawer window. Thus, the drawer window, in one embodiment, acts as a desktop window into which, and from which, objects (e.g. an icon of a favorite or a channel) may be dragged and it appears as part of a primary window which presents media data (e.g. displays still images or movies or plays back audio only, etc.).

The drawers or trays of the media player **200** provide additional functionality or information in association with play back or other processing of a time-based media file. For example, the tray associated with a controls button **206**, as described below, includes a number of other mechanisms to control play back and other processing of a time-based media file, which mechanisms may include, for instance, audio balance, bass, and treble controls, forward/reverse scan controls, step back/forward controls, etc. As such, a user may activate the controls button **206** (e.g., by clicking/double clicking with a pointing device while the cursor is on the controls button **206**), and the control panel will, in one embodiment, "slide" from the media player **200** window appearing as if it was a drawer hidden/closed under the media player **200**. Similarly, a favorite/channel drawer control **214**, when activated by the user (e.g., using a pointing device), opens a favorite/channel drawer which is described in further detail below. Finally, an information button **210** opens an information tray **250** when activated and this tray will, in one embodiment, slide from the media player **200**, appearing as if it was a drawer hidden/closed under the media player **200**.

The size of the media player **200** and/or the motion video display window **202** may also be varied by activating a resize control **208**. In one embodiment, the media player **200** is displayed at a default minimum size. In this embodiment, when the resize control **208** is activated, two animated rectangles are displayed: one animated rectangle represents the size of the motion display window **202** (with any image displayed therein) and the other animated rectangle represents the media player **200** window. Each animated rectangle represents the currently selected size of one of these two windows, and thus each animated rectangle indicates the size of the window if the currently selected size is ultimately selected by the user. As such, the resize control **208** may be "dragged" by the cursor to resize the motion video display window **202** (and any image displayed thereby) without changing the size of the window **200** until the size of window **202** increases to a threshold size, which in one embodiment, corresponds to substantially the edges of the media player **200** or a window **202** of dimensions 320×240 pixels. When this occurs, an attempt to further enlarge the motion video display window **202** will enlarge the media player **200** window and the window **202** together. In other words, if the outer window rectangle is larger than the minimum (default size), the two rectangles grow and shrink proportionally together. However, if the user attempts to shrink the media player **200** window's animated rectangle below the minimum size, only the motion video display window **202** (and its animated rectangle) will shrink, and the size of the media player **200** window will remain unchanged from the minimum size.

FIG. **3**B shows an example of an audio-only player window. The player window of FIG. **3**B may include the same controls and drawers as the player of FIG. **3**A except that only audio media is played back through the player window of FIG. **3**B.

It will be appreciated that the media presented through the various interfaces of the invention is not limited to movies with audio, or movies without audio, or audio-only time-based media (e.g. speeches or music), or still images or combinations of these media. It also will be appreciated that

the drawers may contain any number of different types of controls or, generally, objects associated with media or control of the presentation of media. These controls in the drawers allow a user to manipulate and design a presentation of media or otherwise control it. A drawer may contain a combination of controls (e.g. control buttons) and favorites or channels of media, although in the embodiment shown in FIGS. **4**, **6**A and **6**B, the controls are displayed in one drawer separately from a drawer containing favorites and/or channels. It will also be appreciated that, in one instance, the favorites are merely preselected media (either locally stored or received from a remote site) which the user (or the system at the user's request or the system on its own) has decided to save for future use by designating the media as a favorite (which is similar to the manner in which a web site is selected as a favorite or is selected as a bookmark in a Web browser such as Microsoft's Internet Explorer or Netscape's Navigator). It will also be appreciated that a player window (e.g. window **200**) may have multiple drawers for favorites or channels; for example, there may be two separate drawers for favorites and two separate drawers for channels. The controls may also be placed in separate drawers.

FAVORITE/CHANNEL DRAWER

Now referring to FIG. **4**, the time-based media player of FIG. **3**A is shown depicting a favorite/channel drawer that is partially open, according to one embodiment of the invention. In particular, the media player **200** is shown along with a favorite/channel drawer **230**. In one embodiment, in response to a user input with respect to the favorite/channel drawer control **214**, which may involve activation of the favorite/channel drawer control **214** by placing a cursor thereon and clicking and holding a pointing device (e.g., a mouse button), the favorite/channel drawer **230** may be "opened" as a secondary drawer window with respect to the media player window **200**, such that it appears to be at least partially overlapped by and attached to the media player **200**. Prior to being opened as a secondary window, a handle of the secondary window is displayed next to the primary window, and this handle remains attached to the secondary window after the secondary window is opened. By moving the cursor up and down while the favorite/channel drawer control **214** is activated (e.g. the cursor is placed over the control **214** and the mouse's button is held depressed), a user may close and open the favorite/channel drawer (window) **230** to be displayed in various proportions relative to the media player **200** window. Examples of mechanisms and terminology for display interfaces, cursor control, and drawer user interfaces are described in U.S. Pat. No. 5,745,096, issued on Apr. 28, 1998, and entitled, "Desk Drawer User Interface," which is hereby incorporated by reference herein. The favorite/channel drawer **230** may also be referred to as a media drawer.

Typically, the media player window **200** is displayed as a primary window, for example, on a desktop window which may be moved around the desktop (e.g. moved by dragging the window around the desktop). The media player window may include a trigger region, such as the drawer control **214**, for controlling display of a secondary window, the drawer **230**. It will be appreciated that while the drawer **230** is referred to as a secondary window it is effectively, in one embodiment, part of the primary window in that it is attached to the primary window and moves with the primary window as it is moved around the desktop. A cursor control device (sometimes also referred to as a pointing device) may be used to control a cursor position on a display. Alternatively, speech recognition may be used to open and close the favorite/channel drawer. When the cursor is placed on a screen/display region of the trigger region and the region is selected (e.g., by depressing a mouse or other cursor select/activation input device) in a first state of the favorite/channel drawer window, in which state the contents of the drawer window are not displayed (e.g., as shown in FIG. **3**A), a user may drag the cursor (e.g., in a downward direction) to "open" or reveal for display the contents of the drawer or a portion thereof, in which case the drawer is in a second (or displayed/open) state. This second state of the drawer window is shown in FIGS. **4** and **5**A. The drawer may slide open with a sliding (e.g. nearly continuous) animation or may "pop" open from a closed state. Similarly, the drawer may slide closed with a sliding animation or may pop closed without any sliding animation. The cursor can further be controlled to place time-based media source icons into the drawer (e.g. by dragging an icon from a desktop or folder on the desktop to the drawer), remove time-based media source icons from the drawer, rearrange time-based media source icons between locations in the drawer or other windows, and/or select for playback a media file associated with an icon displayed in the drawer (e.g., by placing the cursor over that icon and activating the icon). As described below, the media player may also include auxiliary drawer windows which may be operated similarly to provide functionality and/or information relating time-based media data that may be processed by the GUI media player of the present invention.

In FIG. **4**, the drawer **230** is shown partially opened to reveal a favorite/channel row **244** and a portion of a row **246**. The favorite/channel row **244** comprises favorite/channel wells **232**, **234**, **236**, **238**, and **240**. Each favorite/channel well represents, in one embodiment, a fixed, predetermined, tiled display location within the drawer **230** that may contain a reference (e.g., a display/cursor activated icon) to particular time-based media source, which in one embodiment may be a particular time-based media file or a particular time-based media channel. For example, as shown in FIG. **4**, the well **234** contains a media source icon **248** and the well **238** contains a media source icon **250**, each of which may reference a particular time-based media file or channel or may reference a non-time-based media file. Each row of the drawer includes tiled compartments, each of which is designed to hold one media source icon. The filed compartments have a fixed, predetermined location, thereby preventing placement (in one embodiment) of a media source icon in an arbitrary location. Any attempt to drop an icon in an arbitrary location will result in the icon being placed into an available well (not already occupied by an icon). That is, the placement is restricted to the tiled (e.g. non-overlapping) locations. In one embodiment, the media player **200** may be generated and displayed on a client computer system, such as one shown in FIG. **1**, and the media source icon **248** may reference a particular time-based media file, such as a QuickTime movie, that is stored locally by the client computer system or at a remote location (e.g., a Web server system) that provides the media file for play back (or other forms of presentation) by the media player **200** in response to a request. In one embodiment, such a play back request is performed by activating the media source icon **248** (e.g., by pointing the cursor thereon and clicking on it). For example, if the time-based media file comprises motion video, such will be displayed in the display window **202** after activating the associated media source icon. In one embodiment, when a source icon (e.g. icon **248**) is activated, a highlighting is displayed around the edges of the well which contains the activated icon.

In addition, a media source icon, such as the media source icon **248**, may reference a particular media channel, such as a news provider (e.g., CNN, Fox News, etc.), a major network (e.g., ABC, NBC, CBS, etc.), a shopping network, or another channel. Such channels correspond to sources that typically provide continuous time-based media information/programming via a media source, such as a Web server coupled to the Internet. Such a media source may stream media information into data packets that may transferred across a data processing network, such as the one shown in FIG. **1**, according to the QuickTime or other media format and such data may not be stored locally (except perhaps for any ephemeral storage required for local playback). The address of such media is associated with the media source icon and is stored for quick access by the user.

Thus, wells may be filled with icons associated with files from the user's digital processing system (e.g., a file may be dragged from the desktop or other window/directory to a well in the drawer or a file menu associated with the drawer may be used to add an icon to a well in the drawer) or may be filled with icons (which may sometimes also be referred to as "bookmarks") associated with streamed time-based media provided by a remote (e.g., Web) system. In one embodiment, a user may subscribe to certain channels, media (Web) servers, etc., which will then provide the icons associated with the subscribed media source(s) into wells in the drawer and/or any other directory associated therewith. Thus, in one embodiment, the drawer may be altered by the user or automatically altered/updated by a remote server or other digital processing system by transferring, rearranging, adding, or deleting time-based media icons therein. In one embodiment, the favorite/channel drawer may contain icons associated with "favorite" media of the user.

In one embodiment, media source icons provide a graphical reference to the media source associated therewith. For example, a particular frame of a motion video may be used as a "thumbnail" to represent the media source (e.g., file, channel, etc.) associated therewith. As such, data (e.g., a frame) from a particular media file or other media source may be used to generate a media source icon in the drawer **230** to reference that particular media file. On the other hand, a media source icon may include text or symbols or other graphics or images to identify a media file or channel associated therewith. For instance, the logo/symbol associated with a particular news or network channel may be used as a media source icon that references that channel to play back time-based media provided thereby when that icon is activated.

In one embodiment, a particular time-based media icon may be highlighted graphically when selected (e.g., by placement of the cursor thereon and/or single clicking a pointing device thereon). Such highlighting, in one embodiment, includes providing a border around a selected time-based media icon. It will be appreciated that selection may, but does not always include, activation of the icon, the latter of which runs/loads the media (e.g. file or channel) associated with the icon. For example, in one embodiment, activating a particular time-based media icon is performed by selecting and then clicking that icon, which in turn causes the time-based media player **200** to play the time-based media file associated with that icon. In one embodiment, the drawer **230** may slide closed after a source icon in a channel has been selected for presentation (e.g. displaying video and reproducing the associated audio).

FIG. **5**A is a diagram of a time-based media player providing a favorite/channel drawer generated as a GUI, according to one embodiment of the invention. In particular, FIG. **5**A shows the drawer **230** opened to a greater extent than shown in FIG. **4**, for example, to reveal several well rows, including the well rows **244** and **246**, the latter of which was partially hidden in the view of the media player **200** shown in FIG. **4**. In one embodiment, the amount of the drawer **230** which is visible is controlled by the user. In one embodiment of the invention, selected wells or well rows, such as the well rows **244** and/or **246**, may be reserved for certain media sources, such as certain favorites or channels of media provided by a media server. On the other hand, other wells may be freely utilized to store media icons. In one embodiment, time-based media icons may be transferred as icons and/or file names associated with time-based media sources from other locations/directories (e.g., a desktop or other window) of a digital processing system to a well of the drawer; transferred from one well to another well within a drawer; and/or transferred from a drawer to another location/directory of the digital processing system. In one embodiment, known cursor dragging methods may be employed to facilitate such transfers.

FIG. **5**B shows an example of a graphical user interface according to the present invention which may be displayed on a display screen of a computer system. This interface includes a desktop **200***b* and a menu bar **200***a* having pull down menus, such as pull down menu **200***h*. The desktop **200***b* includes an icon **200***f* for a hard disk and an icon **200***g* for a folder as well as an icon for a media document **200***d* and an icon for a trash can **200***c*. A cursor **200***e* is also displayed on the desktop in the vicinity of the media player **200**. The media player **200** includes a close box **222** and a display window **202** for showing images. Below the window **202** is the drawer **230** which has been opened to show four rows of wells, including rows **246** and **244**. Four source media icons are shown in the drawer **230**. A handle below the rows includes the drawer control **214** and the resize control **208**. FIG. **5**B will now be used to describe various processes for altering the contents of the drawer **230**. A media source icon may be added to the drawer **230** by dragging the icon from the desktop or from a folder or from the hard disk icon into a well in the drawer **230**. For example, the cursor **200***e* may be used to select and drag the icon **200***d* into the well **242** to thereby relocate the icon **200***d* into the well **242** of the drawer **230**. In this manner, if the icon **200***d* represents a movie, this icon will be added to the drawer so the user may select for playback the movie represented by this icon by merely opening the drawer and then selecting this icon in well **242**. This foregoing process may be reversed to thereby delete an icon from the well **230**. For example, the cursor **200***e* may be used to select an icon, such as media source icon **248**, and then to drag this icon from its well out of the drawer **230** and into the trash can **200***c*. This will cause the icon **248** to be removed from the drawer **230** and this icon and its associated media will no longer be a favorite which can be selected by selecting an icon within the drawer **230**.

Another way to add a favorite into the drawer **230** is to open a media, such as a movie, so that it is displayed within the window **202** (or in the case of an audio fie, the audio file is ready to be played). Then, the user can use the pull down menu **200***h* to select the option "add favorite" which adds the media to the first available well in the drawer **230**.

The icons within the drawer **230** may also be used to create a short cut or alias to the media by dragging an icon from the drawer **230** to the desktop (except for the trash can).

AUXILIARY DRAWERS/PANELS

FIG. **6**A is a diagram of time-based media player providing an information panel (or drawer) window generated as

GUI, according to one embodiment of the invention. In particular, FIG. **6**A shows the bottom portion of the media player **200** shown in FIG. **3**A having "opened" an information drawer **250**. The information drawer **250** also represents a "drawer" or secondary window that may be revealed (or opened) or hidden relative to the media player **200** window. In one embodiment, the drawer **250** behaves relative to window **200** in the same manner as drawer **230** behaves relative to window **200**. For example, the drawer **250** appears attached to and moves with the window **200** when the window **200** is moved around the desktop. The information drawer **250**, in one embodiment, is primarily utilized to display any one or combination of various types of information associated with a currently selected media Such information may include, but is not limited to, copyright/trademark information, encryption information, data compression information, other credits, warnings, etc. For example, as shown in FIG. **6**A, the information drawer **250** displays the message "Compressed with Media Cleaner™."

To view the information displayed by the information drawer **250** when the media player **200** window appears as shown in FIG. **3**A (i.e., with the information drawer **250** closed), the information button **210** may be selected (e.g., by placing the cursor over the button **210** and depressing and releasing a select button, such as a mouse button). In response to selection of the information button **210**, the information drawer **250** will open (e.g. by appearing to slide out from under the window **200**) and reveal information about the current media, for example, as shown in FIG. **6**A.

FIG. **6**B is a diagram of a time-based media player providing a control drawer window generated as a GUI, according to one embodiment of the invention. In particular, FIG. **6**B shows the bottom portion of the media player **200** shown in FIG. **3** having "opened" a control drawer **252**. The control drawer **252** also represents a "drawer" or secondary window that may be revealed (or opened) or hidden relative to the media player **200** window. In one embodiment, the drawer **252** behaves relative to window **200** in the same manner as drawer **230** behaves relative to window **200**. For example, the drawer **252** appears attached to and moves with the window **200** when the window **200** is moved around the desktop. In one embodiment of the invention, the control drawer **252** is provided to display additional controls/functionality for play back or other processing of a time-based media by the media player **200**. As shown in FIG. **6**B and the control drawer **252**, such information may include, but is not limited to, audio bass, treble, and balance controls, forward/backward scan, skip, etc.

To utilize or view the controls/functions provided by the control drawer **252** when the media player **200** window appears as shown in FIG. **3**A (i.e., with the control drawer **252** closed), the control button **206** may be selected (e.g., by placing the cursor over the button **206** and depressing and releasing a select button, such as a mouse button). In response to selection of the control button **206**, the control drawer **252** will open (e.g. by appearing to slide out from under the window **200**) and reveal controls, such as those shown in FIG. **6**A and described above, to control play back and/or other processing of time-based media.

TIME/CHAPTER SELECTION AND DISPLAY

FIGS. **7**A–**7**B illustrate a time/chapter display control of a time-based media player generated as a GUI, and in particular, illustrate an adaptive chapter display/control, according to one embodiment of the invention. In one embodiment of the invention, a time-based media file may be indexed into chapters, wherein each chapter marks the beginning (and ending) of a particular time segment in the time-based media file. Such chapters may be predefined for a media file and/or may be determined by a user. Each chapter may be entitled by its index number (e.g., "Chapter **2**" for the second chapter, and so forth) and/or have a descriptive title (e.g., "Wedding scene"). Therefore, it will be appreciated that chapters are typically descriptions (e.g. text) that indicate or correspond to a time or time range in a time-based media file. Also, a sequential list of chapters may represent the entire contiguous time of a time-based media file.

In FIG. **7**A, the time/chapter display/control **204** of the media player **200** is shown, which includes an adaptive chapter display/control **260** and a time display **262**, which display the corresponding chapter and current time, respectively, of a time-based media file/channel. The adaptive chapter display/control **260**, as shown in FIG. **7**A, is in an idle or unselected state, in which the current chapter (entitled "Swim excitedly") is truncated to a predetermined idle state display size, as depicted by "Swim excit . . . ."

On the other hand, when the adaptive chapter display/control **260** is in an active state, as shown in FIG. **7**B, its size adapts, in one embodiment, to display the entire title of the current chapter. In one embodiment, the adaptive chapter display/control **260** becomes active in response to a user input to change or browse/scroll through chapters. The user input may include, for example, clicking and holding a pointing device (e.g., mouse, trackball, etc.) button while the cursor is over the area **260**. Alternatively, the user input may include speech commands which are recognized by a digital processing system. The user may then cause the chapter displayed by the adaptive chapter display/control **260** to change by moving the cursor (via a pointing device such as a mouse, for example) up and down to display the previous or next chapter(s), respectively.

In one embodiment, the time it takes for the cursor to be moved up or down a specified distance above or below the midlevel or other predefined location of the adaptive chapter display/control **260** (e.g. the speed of the cursor movement) is used to determine the scrolling speed of the chapter(s) being displayed in the adaptive chapter/display control **260**. As such, in one embodiment, the faster the cursor movement, the faster the chapters scroll up or down in the display **260**, and conversely, the slower the cursor movement, the slower the chapters scroll in the area of the adaptive chapter/display control **260**.

In one embodiment, as a user scrolls up or down through chapters by moving the cursor over the adaptive chapter display/control **260**, the times corresponding to the chapters are also scrolled up or down in the time display **262**. In one embodiment, the time may be directly changed up or down by placing the cursor on the time display **262**, clicking and holding the pointing device select button, and moving the cursor up or down with the pointing device. In response, the chapter display **260** will also change to correspond to the time. Thus, the time display **262** and chapter display **260** are linked such that selecting a particular time will cause the chapter display **260** to show the corresponding chapter and visa versa. Furthermore, in one embodiment of the invention, the speed with which the cursor is moved up or down by the user (e.g., using a pointing device, such as a mouse) will determine the scroll speed of the indicators in time and/or chapter display areas **262** and **260**. This will be further described below in conjunction with FIGS. **12**A and **12**B.

FIG. **7**C shows an example of the chapter display/control area **260** which includes the chapter designator **260***a* and an

up arrow **260***b* and a down arrow **260***c*. the cursor **260***d* is also shown in the vicinity of the control area **260** although it is outside, in one embodiment, of the area **260**. Typically, the area **260** may be defined by the border **260***e* as shown in FIG. 7C. When the cursor **260***d* is within the border **260***e*, then by starting a drag within this border, the scrolling of the chapters may be initiated as described herein. This will be further described in conjunction with FIGS. 7F–7J.

FIG. 7D illustrates the appearance of the chapter area **260** when the very first chapter or section is selected and displayed within the area **260**. The chapter designator **260***a* indicates this is the first chapter and the up arrow **260***b* is not highlighted while the down arrow **260***c* is highlighted. This difference in highlighting indicates that a user can only go down into the media rather than also being able to go up in the media. Note that with chapter **2** selected in FIG. 2C, the user can go in either direction. As shown in FIG. 7E, when the last chapter is indicated by the chapter designator **260***a* in the chapter area **260**, only the up arrow **260***b* is highlighted while the down arrow **260***c* is not.

FIGS. 7F, 7G, and 7H illustrate a scrolling up operation while FIGS. 7I and 7J illustrate a scrolling down process. The scroll begins in FIG. 7F by positioning the cursor **260***d* within the chapter area **260** and by moving the cursor in an upwardly direction as shown by the arrow **261***a*. Typically, the cursor is positioned within the area and then the user indicates the dragging of the cursor by pressing a mouse button or other button and holding the button down while moving the cursor. After the beginning of the drag, the up arrow **260***b* becomes highlighted and the down arrow **260***c* is no longer highlighted, indicating the direction of the scroll, which in this case is up from chapter **4** to chapter **2** as shown in FIG. 7H. FIG. 7G shows an intermediate stage where the cursor **260***d* has moved from approximately a midline point within the chapter display control area **260** to a point approximately two-thirds of the way up, resulting in chapter **3** being displayed as the chapter designator **260***a* while the up arrow continues to be highlighted during the scroll operation which ends in FIG. 7H as the cursor **260***d* is now positioned above the area **260**. The scroll can continue as long as the mouse button or other button remains depressed, indicating an active drag of the cursor which began in the chapter display area **260**.

FIGS. 7I and 7J illustrate scrolling in the opposite direction by positioning the cursor **260***d* within the area **260** and then dragging it down as shown by the arrow **261***b*. As the cursor **260***d* is dragged downwardly, the chapter designator changes from chapter **3** to chapter **4** as shown in FIG. 7J, and the cursor **260***d* is now closer to the lower portion of the area **260** as shown in FIG. 7J.

FIGS. 8A–8B illustrate a GUI mechanism of a time-based media player for selecting for playback (or other presentations) a range of time within a time-based media file, according to one embodiment of the invention. As shown in FIGS. 8A and 8B, in addition to the time display **262** and the adaptive chapter display/control **260**, the time/chapter display/control **204** includes a time bar **271**. The time bar **271** represents a time line of the current time-based media file. The position of a current time marker **274** on the time bar **271** indicates the current time (e.g., time currently being played back, such as an approximation of the time of the currently displayed frame in window **202**) of the currently selected media file. A user may drag the position of the current time marker **274** along the time bar **271** to change the time-based media file's current time to a currently selected time. In one embodiment, the time display **262** and the adaptive chapter display/control **260** are updated (to show the current time and current chapter, respectively) as the current time marker **274** is moved and a frame at the currently selected time is also displayed in window **202** to update that window. In one embodiment, when a time-based media file is being played back, the current time marker **274** moves from the left to the right to indicate how much of the time-based media file (depicted by the entire length of the time bar **271**) has elapsed or remains.

In addition, a select start marker **270** and a select end marker **272** allow selection of a time range within a time-based media file. This time range, once selected, allows playback (or other presentation) of only a portion of the time-based media file. In FIG. 8A, the select start marker **270** is positioned at the left-most end of the time bar **271**, which coincides with time zero and the beginning of the current time-based media file. Also in FIG. 8A, the select end marker **272** is positioned at the right-most end of the time bar **271**, which corresponds to the end of the time-based media file. Thus, if the time-based media file is played back with the markers positioned as shown in FIG. 8A, the entire time-based media file will be played back in window **202** from beginning to end, unless stopped.

On the other hand, as shown in FIG. 8B, the select start marker **270** is moved to the right relative to its position shown in FIG. 8A. Similarly, the select end marker **272** is shown moved to the left relative to its position shown in FIG. 8A. As such, only the time range corresponding to that portion of the time bar between the select start marker **270** and the select end marker **272** shown in FIG. 8B is selected in FIG. 8B. Therefore, a user may select substantially any start or end time to determine a particular range of time for playback in a time-based media file. The selected range may be played back, used for editing (e.g., it may be cut from, added to, etc., to a time-based media file), used for creating a new time-based media file with the selected range and placing a corresponding icon in the favorite/channel drawer, or other purposes.

In one embodiment, when a user changes or scrolls through the time or chapters of a time-based media file using any of the three mechanisms described with reference to the time/chapter display/control **204**, the display window **202** of the media player **200** also displays the image frame at the corresponding time/chapter "dragged" by the user.

FIG. 8C shows a flowchart which represents one particular method for implementing the interface shown in FIGS. 8A and 8B. In operation **275***a* a time bar, such as time bar **271**, is displayed with a current time indicator, such as the time display **262**. In operation **275***b*, a start marker, such as the select start marker **270** is positioned on a location along the time bar **271**. This may be achieved by positioning a cursor over the select start marker **270** and by dragging the select start marker **270** along the time bar **271**. The operation of dragging an icon is well known in the art and may be achieved by positioning a cursor in association with the icon, selecting the icon by depressing a mouse button, and while keeping the mouse button depressed, moving the cursor and thereby also moving the icon in a drag operation. In operation **275***c*, a number of different operations may occur concurrently with the drag operation in **275***b* or at the end of a drag operation. In the preferred embodiment, these operations may be performed during the drag operation rather than at the end. In this manner, feedback is given to the user as to the particular start frame which has been selected as the start select marker **270** is moved along the time bar **271**. Some or all of the operations in operation **275***c* may be performed as these drag operations occur. The time display, such as time display **262**, may be updated (e.g. updated from

00:00:00 to 00:05:05) as the start marker is dragged along the time bar. The time display will be updated to indicate the start time selected at the current location of the start marker **270** along the time bar **271**. Also, the display frame which has been selected as the start frame may be displayed within the window **202**. Further, the time bar itself may be updated to indicate the selected portion of the time-based media. This is shown in FIGS. **8**A and **8**B by the highlighting which occurs in the middle of the time bar **271** while the ends of the time bar are not highlighted. Dragging the start selector **270** from left to right will change the amount of highlighting along the time bar, thereby indicating the amount of the movie which has been selected for playback. Also, the current time marker may optionally be moved to coincide with the start time marker. Further, the chapter display may be updated to show the chapter corresponding to the time selected by the start marker's position along the time bar. Of course, if a particular time-based media file has no chapters, there is no need to update the chapter display in the control area **260**.

The user may perform a positioning operation on the select end marker **272** as indicated in operation **275***d* of FIG. **8**C. In particular, the user may drag the end marker to a location along the time bar **271** or may position the cursor without a drag operation over a particular location and then click to indicate that location after having previously selected the end marker for a positioning operation. The same type of positioning operation may be performed with the start marker **270**. As the end marker is dragged along the time bar **271**, the time display **262** indicating the end of the movie may be updated and a display area **202** may also show the currently selected end frame in order to let the user know when the selected portion of the movie will end. Also, the time bar may be highlighted or shaded to indicate the end of the selected portion as shown in FIG. **8**B and this highlighting or shading may be updated as the select end marker is dragged along the time bar **271**. Further, the chapter display may be updated during the drag operation or positioning operation of the end marker to show the chapter corresponding to the time selected by the end marker's position along the time bar.

After positioning one or both of the start and/or end markers, the user may cause the presentation of the selected range/portion of the time-based media by, for example, "clicking" on the play button **216**.

FIGS. **8**D, **8**E, and **8**F illustrate the display, in one embodiment, of a time display/control area **204**. This area **204** includes a time bar **271** as well as a current time marker **274** and select start marker **270** and select end marker **272**. The display and control area **204** also includes time display **262**. As with the embodiment shown in FIGS. **8**A and **8**B, the current time marker shows the current time for the current frame relative to the time bar **271**. The select start marker **270** shows the selected start time and the select end marker **272** shows the selected end time. The markers **270**, **272**, and **274** may be dragged along the time bar **271** as with the embodiment shown in FIGS. **8**A and **8**B in order to modify the current time or the start time or the end time as described above. Three buttons on the left portion of the control and display area **204** relate and correspond to the three markers **270**, **272**, and **274**. In particular, the button **276***a* corresponds to the select start marker **270**, and the marker **276***b* corresponds to the current time marker **274**, and the select end marker **272** corresponds to the button **276***c*. Each of these three buttons **276***a*, **276***b*, and **276***c* may be selected (e.g. by positioning a cursor over the button and depressing and releasing a mouse button or another key on the system), and when the particular button is depressed, the time of the corresponding marker is shown in the display time area **262** and the corresponding marker is also highlighted with its corresponding button. For example, as shown in FIG. **8**D, the selection of the button **276***a* causes the start marker **270** to be highlighted and causes the time display **262** to show the time of the select start marker **270**. Similarly, FIG. **8**E shows that when the button **276***b* is selected, it becomes highlighted and the current time marker **274** becomes highlighted and the time of the current time marker is displayed within the time display **262**. Similarly, FIG. **8**F shows that when the button **276***c* is selected, it becomes highlighted and the select end marker **272** becomes highlighted and the ending time selected by the marker **272** is shown in the time display **262**.

These buttons **276***a*, **276***b*, and **276***c* also provide feedback to a user, indicating which of the three markers is being selected and manipulated by the user. For example, when the select start marker **270** is selected and is being dragged along the time bar **271**, the button **276***a* becomes highlighted while the buttons **276***b* and **276***c* are not highlighted. This indicates to the user that the start marker is being manipulated and the time display **262** is updated to follow the movement of the marker **270** to show the currently selected start time. Similarly, when the current time marker **274** is selected for direct manipulation (e.g. a dragging of the marker **274**) then the button **276***b* is highlighted while the other buttons **276***a* and **276***c* are not highlighted. Similarly, when the marker **272** is being dragged along the time bar **271**, the button **276***c* is highlighted while buttons **276***a* and **276***b* are not highlighted as shown in FIG. **8**F.

STREAMING STATUS MESSAGE DISPLAY

FIGS. **9**A–**9**B illustrate an adaptive streaming status message display of a time-based media player generated as a GUI, according to one embodiment of the invention. This status message display may also be used for non-streaming media.

In one embodiment, the media player **200** may play back or otherwise process time-based media received over a network. For example, a QuickTime movie may be streamed by a remote digital processing system, typically a server, to the user's local system, where the user has requested the movie (e.g., by clicking on an icon in the favorite/channel drawer of the media player being executed on the local system, wherein the icon references the movie and/or the server that provides the movie).

As shown in FIGS. **9**A and **9**B, the time/chapter display/control **204** provides a mechanism for displaying status information related to streaming of time-based media over a network. In particular, as shown in FIGS. **9**A and **9**B, an adaptive streaming message display **280** appears in the time/chapter display/control **204**. The adaptive streaming message display **280** scrolls in from the right-most portion of the time/chapter display/control **204** to display status messages such as "Connecting . . . ", "Negotiating . . . ", "Receiving . . . ", "Buffering . . . ", and/or other status messages. The status messages in the message display **280** scroll from the right and cover as much of the time/chapter display/control **204** as needed to display the message.

In one embodiment, when a currently displayed status message is to change to the next status message (e.g., from "Connecting" to "Negotiating"), the current message will scroll "out" to the right. For example, FIG. **9**A shows a portion of the message "received PLAY response . . . " scrolling in from the right to the left in the adaptive

streaming message display **280**, while FIG. **9**B shows a larger portion of the same message having been scrolled in from the right to the left. However, if another status message were to follow, the message "received PLAY response . . . " would scroll out from the left the right (i.e., in the opposite direction). Thus, in one embodiment of the invention, each status message appears and disappears in a streaming/scrolling fashion.

FIGS. **9**C–**9**H illustrate an alternative embodiment for a status message display for a media player according to one embodiment of the invention. Each of these figures shows a portion of the display control area **204**. This portion shown may be the middle of the area, for example, the middle of the area shown in FIG. **7**A. In this instance, the time bar may not be displayed while these messages scroll through this area. FIG. **9**C shows the beginning of a sequence of messages which may occur when the media player is receiving a streaming media. It will be appreciated that this embodiment of the present invention may be utilized with live or stored streaming and may be used with non-streaming media; the content of the messages would, of course, be tailored to provide the appropriate information depending on the type of media and the type of connection and whether it is streaming or non-streaming media As shown in FIG. **9**C, the first message is "Connecting" and this message begins to scroll down in the area shown in FIG. **9**C and the next message scrolls in from the top as the previous message "Connecting" is scrolling down. FIG. **9**D shows a particular stage in which the first message "Connecting" has scrolled down to near the bottom while the second message "Negotiating" has scrolled into the area and is scrolling down. FIG. **9**E shows the second message "Negotiating" has scrolled further down and the first message "Connecting" has scrolled out of view. This scrolling in a vertical direction from top to bottom continues as the third message "Buffering" scrolls into view as shown in FIG. **9**F. The next message may be either that shown in FIG. **9**H ("Live Broadcast" in the case of a streaming live media) or the time bar **271** with its associated markers as shown in FIG. **9**G in the case of a stored streaming media or other media.

Thus the interface provided by the embodiment shown in FIGS. **9**C–**9**H provides a vertical scrolling of messages through the area **204** by removing the time bar for a portion of the time.

MEDIA PLAYER AND DISPLAY WINDOW RESIZING

FIGS. **10**A–**10**C illustrate resizing a time-based media player generated as a GUI and/or a display window for displaying time-based images, according to one embodiment of the invention. In one embodiment, the size of the media player **200** again depicted in FIGS. **10**A–**10**C and/or the motion video display window **202** may be varied by dragging the resize control **208** (e.g., by depressing and holding a mouse button or other pointing select button on the resize control **208**, and then moving the cursor using the mouse).

In one embodiment, the media player **200** is displayed at a default minimum window size, which is shown in FIGS. **10**A and **10**B while the window **202** within the player **200** may have different sizes as shown in FIGS. **10**A and **10**B. The video display window **202** may also have a minimum size, which in one embodiment is equal to 320×240. It will be appreciated that alternative embodiments may incorporate various other minimum or default sizes or may not incorporate a minimum size.

In one embodiment, when the resize control **208** is dragged, two animated rectangles are displayed: one animated rectangle represents the size of the display window **202** (any image displayed therein) and the other animated rectangle represents the size of the media player **200** window (which contains the window **202**). The resize control **208** may be "dragged" by the cursor to resize the motion video display window **202** (and any image displayed thereby) without resizing the window **200** until the size of window **202** increases to a threshold size, which in one embodiment, corresponds to substantially the edges of the media player **200**, which is shown in FIG. **10**B. When this occurs, an attempt to further enlarge the motion video display window **202** will enlarge the media player **200** window as well, which is shown in FIG. **10**C. However, if the user attempts to shrink the media player **200** window below the default minimum size, only the display window **202** (and its animated rectangle) will shrink, and the size of the media player **200** window will remain unchanged from the minimum size.

FIG. **10**D is a flowchart which illustrates one method of performing a resizing operation with the two windows included in media player **200**. FIGS. **10**E and **10**F illustrate examples of these two windows during a shrinking operation (FIG. **10**E) or an enlarging operation (FIG. **10**F).

Operation **290***a* of FIG. **10**D detects a user input to change the size of a window in the time-based media player **200**. Typically, this will involve a user positioning the cursor over the resize control **208** and while selecting that control, moving the cursor while the control remains selected. As long as the control is selected (e.g. keeping the mouse's button depressed down) the user is indicating to the system that the window is to be resized. The system will monitor the user's position of the cursor and control the size of the window in a corresponding manner. Typically, two animated windows are displayed, one corresponding to the currently selected size of the inner window and the other corresponding to the currently selected size of the outer window. The animated windows are animated because they change in size as the resizing operation occurs. In the case of the preferred embodiment, the outer window does not change size unless it is currently selected at a size larger than the predetermined size. This is shown in FIG. **10**E in which the rectangle **291***b* represents the predetermined size of the outer window, which in this case is the outer perimeter of the player **200** shown in FIG. **3**A. The rectangle **291** e represents the inner window's periphery at the end of a drag of the cursor **291***a* while the rectangle **291***d* represents the inner window's periphery at the start of the drag. The arrow **291***h* represents the direction of the drag starting from one location and inwardly towards the rectangle **291***e*. The rectangle **291***c* is shown within the rectangle **291***b* only for purposes of illustration to separately show the two rectangles. It will be appreciated that the rectangle **291***c* represents the outer window's periphery and that this periphery does not shrink below the predetermined size represented by the rectangle **291***b*. The animated rectangles **291***f* and **291***g* appear during the process of dragging from the beginning position of the cursor to the ending position of the cursor as the inner window is reduced in size. It will be appreciated that there are a number of ways to animate the changing size of a window. In one embodiment, a zooming series of shrinking rectangles may be displayed as the user moves the cursor from one location near the outer window's periphery towards the inner window's periphery. These zooming animated rectangles are well known in the art.

FIG. **10**F represents an expansion of both the inner and outer windows as the user drags the cursor **291***a* along the path **291***i*. In this case, the outer window is dragged beyond

the predetermined size shown by rectangle **291***b* to its final size shown by rectangle **291**L. Similarly, the drag operation enlarges the inner window from its beginning size shown by rectangle **291***m* to its final size shown by rectangle **291***p*. During the dragging operation, several animated rectangles may be displayed for both the inner and outer windows showing the user the size of both windows. This feedback allows the user to be able to determine the size of the outer window and also to determine the size of the inner window while a dragging operation is occurring. Thus, for example, the user can enlarge the inner window to see a bigger picture while at the same time assuring that the outer window is not enlarged too much such that it may obscure background features on a desktop or that it may extend beyond displayable area such that controls on the outer window may not be available.

Referring back to FIG. **10**D, the operation, once user input is detected, proceeds to operation **290***b* in which the size of the outer window being changed is compared to a predetermined size such as a predetermined area. If this outer window is being changed below a predetermined size, then processing proceeds to operation **290***g*. This is shown in FIG. **10**E in which there is a changing outline of the inner window which is animated to indicate the changing size of the inner window but the dragging operation does not affect the size of the outer window as long as the size of the outer window's size remains below the predetermined size. In operation **290***h*, it is determined while dragging whether the size of the outer window is less than the predetermined size. If it is not, processing proceeds to step **290***i* in which it is determined whether dragging has been completed. If, in operation **290**, it has been determined that the size of the outer window is larger than the predetermined size, then processing proceeds to operation **290***c*. If, in operation **290***i*, it has been determined that dragging has ended, then processing returns back to operation **290***b*, otherwise, if dragging has ended in operation **290***j*, the size of the inner window is changed to the final selected size of the inner window. Typically, this will mean that the periphery of the inner window will be the same size as the periphery of the animated window which was displayed when the drag was ended.

Operation **290***c* is illustrated in FIG. **10**F in which both the inner and outer windows have animated zooming rectangles associated with the windows while the user drags the resizing control. Animated rectangles **291***n* and **291***o* are examples of zooming animated rectangles for the inner window, and animated zooming rectangles **291***j* and **291***k* are examples of animated windows for the outer window. In operation **290***d*, it is determined whether the size of the outer window is less than the predetermined size. If it is not, processing proceeds to step **290***e*. If, in fact, the size of the outer window is less than the predetermined size, then processing proceeds to operation **290***g*. In operation **290***e*, if the drag has ended, then processing proceeds to operation **290***f* in which the inner and outer windows are set to the new selected sizes. If the drag has not ended as determined in operation **290***e*, then processing returns back to operation **290***c*.

In this manner, the size of both the inner and outer window may be determined by looking at the current size of the animating rectangles.

In alternative embodiments, two separate resize mechanisms may be provided, each to control resizing of one of the media player **200** and the display window **202**.

METHOD FOR PROVIDING A FAVORITE/ CHANNEL DRAWER WINDOW

FIG. **11** is a flow diagram illustrating a method for providing a favorite/channel drawer window for a time-based media player generated as a GUI, according to one embodiment of the invention. Flow begins at block **302**.

At block **304**, input is detected to open a favorite/channel drawer window relative to a media player window. For example, such input may include dragging a drawer control icon, such as the favorite/channel drawer control **214** of FIG. **3**A, in the same direction in which the favorite/channel drawer is to be opened, and doing so until a desired portion of the favorite/channel drawer is displayed. As such, in one embodiment, the size of the drawer window (and how many wells are displayed) is incrementally selectable to the extent that a user drags open or closed the favorite/channel drawer. On the other hand, in an alternative embodiment, the drawer window may be opened (e.g. displayed) at only a predetermined size, such that a user may open the drawer to such size by selecting an icon (e.g. "clicking" or double-clicking on the icon by positioning a cursor on the icon and depressing a button or by speaking the icon's name in a system with speech recognition capabilities) and may close the drawer window by "clicking" or double-clicking on the same icon. Alternatively, keyboard commands (e.g. "command]") may be used to open and close the drawer window or the selection of a command from a pull down menu may open or close the drawer window.

At block **306**, the drawer window is displayed. As mentioned above, the extent to which the drawer window is displayed may be selectable, for example, as determined by the extent the drawer window is "dragged open" by a user, or may be displayed at a default/non-selectable size or proportion.

At block **308**, if input is detected to select an icon in the drawer or to alter the drawer (e.g., to add, delete, rearrange, etc., an icon), flow passes to block **314**. Otherwise, flow passes to block **310**. The input may include clicking on an icon in a well of the drawer, dragging an icon to or from a well, etc.

At block **310**, if input is detected to close the drawer (e.g., a user dragging the drawer control **214** up to hide to the drawer or a portion thereof), flow passes to block **312** where the drawer window is (at least partially) closed. Otherwise flow passes back to block **306**.

At block **314**, if the input detected at block **308** is directed to playback of time-based media data (e.g., the user clicks an icon in the drawer), flow passes to block **316**, where the time-based media file is played back by the time-based media player. For example, the user may click on a time-based media icon in the drawer that references a time-based media file, such as a QuickTime movie, that is stored locally or at a remote server. The movie would then be retrieved and played back from local storage or streamed to the user's local system where the media player would display the movie (e.g., in the display window **202**) and/or playback audio tracks of the movie.

Otherwise, flow passes to block **318**, where the drawer window is altered. Such alteration may include dragging an icon or file name from another location in the user's computer system (e.g., the desktop or other directory/location) to a well of the drawer or visa versa; dragging a time-based media icon from one well location to another well location; deleting a time-based media icon from the drawer; etc.

ADAPTIVE CHAPTER/TIME SELECTION

FIG. **12**A is a flow diagram illustrating a method for providing adaptive chapter/time selection for play back or other processing of time-based media in a GUI, according to one embodiment of the invention. Flow begins at block **330**.

At block **332**, a time-based media player window, such as the media player **200** window shown in FIG. **3**A, is displayed.

At block **334**, media time and/or chapter control and/or display mechanisms are displayed. For example, in one embodiment, such mechanisms may include a time display (e.g., the time display **262** shown in FIGS. **8**A and **8**B), a time bar with selection markers and/or a current time indicator (such as shown in FIGS. **8**A and **8**B), and/or a chapter display/control (e.g., the adaptive chapter display/control **260** shown in FIGS. **8**A and **8**B).

At block **336**, input is detected to alter a time or chapter (which two are typically, but not necessarily linked). For example, such input may include a user placing the cursor in the chapter display/control or the time display and then dragging the cursor up or down to scroll up or down through chapters (or time).

At block **338**, based on a characteristic of the input, the time and/or chapter is adaptively changed. In one embodiment, the characteristic includes the speed in which a cursor is dragged over the chapter display/control (or time display). Based on measuring the time in which the cursor covers a specified distance, the cursor dragging speed is determined. Once the drag speed is determined, the speed in which the displayed chapters in the chapter display/control are scrolled is varied in direct proportion to the cursor drag speed. As such, a user can control the speed he/she wishes to scroll through and view chapters or time by using various cursor dragging speeds to obtain directly proportional scrolling speeds.

FIG. **12**B shows a representation of a graphical user interface which may be used with a method shown in FIG. **12**A. The interface shown in FIG. **12**B is similar to the adaptive chapter portion of the interface shown in FIGS. **7**A and **7**B. It will be appreciated that the chapter display area **339***a* of FIG. **12**B may display the names of the chapters (e.g. swim excitedly) rather than the designator "chapter" with a numeral as shown in FIG. **12**B. The designator chapter **339***b* may alternatively say sections or other designators to indicate portions of the time-based media. A numeral region **339***d* may display a numeral indicating the chapter number and this area **339***d* may provide for scrolling of numerals within the area in response to selecting the chapter region **339***a*. This selection may be performed by positioning the cursor **339***c* in the chapter area and then dragging the cursor in an up or down direction. The arrows **339***e* and **339***f* represent different velocities of the drag which will in turn cause different scrolling speeds within the numeral area **339***d*. In this manner, the user may control the scrolling speed of the chapter designators (e.g. chapter numerals or titles) by controlling the speed of the cursor during a drag of the cursor over the chapter area **339***a*.

AUXILIARY DRAWER/TRAY WINDOWS

FIG. **13** is a flow diagram illustrating a method for providing auxiliary drawers/trays for a time-based media player generated as a GUI, according to one embodiment of the invention. Flow begins at block **340**.

At block **342**, a time-based media player window, such as the media player **200** window shown in FIG. **3**A, is displayed.

At block **344**, input is detected to open one or more auxiliary drawer windows, such as the information drawer **250** or control drawer **252**, described above with reference to FIGS. **6**A–**6**B. The input may include the selection of a button displayed on the window (e.g. clicking of a pointing device select button (e.g., a mouse button) with the cursor over an icon that controls the auxiliary drawer window to be opened).

At block **346**, the auxiliary drawer window is "opened" for display. In one embodiment, the auxiliary drawer is of a predetermined size. In alternative embodiments, one or more auxiliary drawers may be selectively displayed at various sizes (e.g., under user control), for example, as depicted by the drawer window shown in FIGS. **4**–**5**A. The auxiliary drawer may provide information about time-based media and/or provide mechanisms for play back or other processing of time-based media. Such mechanisms may include display and/or control of bass, treble, balance; a graphic equalizer; forward/backward rewind, scan, skip, etc., or other controls for play back or processing of time-based media information such as audio, video, or a combination thereof. Once the auxiliary drawer is displayed, various controls may be modified or selected by the user.

SOFTWARE OVERVIEW

FIG. **14** is a block diagram of a machine-readable medium storing executable code and/or other data to provide one or a combination of mechanisms for play back or other processing of time-based media in a GUI, according to one embodiment of the invention. The machine-readable storage medium **350** represents one or a combination of various types of media/devices for storing machine-readable data, which may include machine-executable code or routines. As such, the machine-readable storage medium **350** could include, but is not limited to one or a combination of a magnetic storage space (e.g., a hard or floppy disk), magneto-optical storage, tape, optical storage (e.g., CD ROM, DVD, etc.), dynamic random access memory (DRAM), static RAM (SRAM), flash memory, etc.

The medium **350** is shown storing a time-based media player routine **352** which, when executed, provides a time-based media player as a GUI such as the player **200**. The time-based media player routine **352** includes a number of mechanisms for playing back or otherwise processing time-based media processed by the time-based media player. For example, a drawer routine **354** generates a drawer window, such as drawer **230**, for display. The drawer may contain wells for displaying one or more references (icons) to media, such as files/channels, which may be stored locally by a digital processing coupled to the medium **350**, or by a remote system, such as a time-based media Web server. The drawer routine **354** may also facilitate altering of the drawer to add, delete, rearrange, select for play back, etc., icons displayed therein. An adaptive time/chapter selection routine **356** allows adaptively varying the display of time or chapter information (e.g., the speed at which such information is displayed as being scrolled, as described in conjunction with FIGS. **12**A and **12**B) in response to detection of an input characteristic (e.g., cursor drag speed when user input causes such information to be varied). A time bar selection marker routine **358** provides a time bar for display, as well as select start/end and current time marker functionality, as described, for example, with reference to FIGS. **8**A–**8**C or **8**D–**8**F. A streaming status message routine **360** provide streaming of status messages, for example, as described above with reference to FIGS. **9**A–**9**B or **9**C–**9**H. A player/display window resizing routine allows resizing of a time-based media player window and/or a motion video display window according to one or more of the methods described above, for example, with reference to FIGS. **10**A–**10**F. Finally, an auxiliary drawer routine provides display areas in the form of drawers in addition to or in lieu of the favorite/channel

drawer, which auxiliary drawers may provide information or additional mechanisms for display and play back or other processing of media.

The machine readable storage medium may also store an operating system (OS) **366**, which may provide a graphical window/icon oriented environment; a data communication routine **370** that facilitates transfer of media and/or other information over a digital processing network; and/or stored/buffered time-based media **368**.

It will be appreciated that alternative embodiments of the GUI for processing time-based information may include fewer or more of the functions described herein. Furthermore, the invention may be implemented in any combination of hardware and/or software.

ALTERNATIVE EMBODIMENTS

While the invention has been described in terms of several embodiments and illustrative figures, those skilled in the art will recognize that the invention is not limited to the embodiments or figures described. In particular, the invention can be practiced in several alternative embodiments that provide one or a combination of mechanisms for playing back or otherwise processing time-based media information (e.g., QuickTime movies) in a graphical user interface. Furthermore, the icons in a drawer may represent media other than time-based media, such as still images or interactive content or Web page links, etc.

Therefore, it should be understood that the method and apparatus of the invention can be practiced with modification and alteration within the spirit and scope of the appended claims. The description is thus to be regarded as illustrative instead of limiting on the invention.

What is claimed is:

1. A method for generating a graphical user interface for presentation to a user, said graphical user interface to provide functionality for processing time-based media data, said method comprising:

generating a first set of data representing said graphical user interface as a primary window for display;

generating a second set of data representing a media drawer window which in a first display state is at least partially overlapped by said primary window and in a second display state is at least partially viewable; and

said media window providing a plurality of locations each for displaying a time-based media icon associated with a time-based media file.

2. The method of claim **1**, further comprising:

storing said time-based media file as a QuickTime movie.

3. The method of claim **2**, further comprising:

storing said time-based media file at a remote location accessible through a data processing network.

4. The method of claim **2**, further comprising:

storing said time-based media file on a machine-readable medium at a local location.

5. The method of claim **1**, further comprising:

receiving said time-based media file from a remote data processing system in response to selection of said time-based media icon associated with said time-based media file.

6. The method of claim **1**, further comprising:

storing said time-based media file for playback in response to selection of said time-based media icon associated with said time-based media file.

7. The method of claim **1**, wherein said time-based media file comprises one of video data, audio data, visual data, and a combination of audio and video data.

8. The method of claim **1**, further comprising:

transferring a set of one or more time-based media icons to a set of one or more of said plurality of locations, such that said set of time-based media icons appear in said media drawer when said media drawer is sufficiently non-overlapped by said primary window, and each of said set of time-based media icons is associated with a particular media file, which particular media file is played back in response to selection of a particular one of said set of time-based media icons associated therewith.

9. The method of claim **1**, further comprising:

generating a secondary window within said primary window, said secondary window for displaying motion image media associated with a time-based media icon of said media drawer window.

10. The method of claim **1**, further comprising:

transferring said time-based media icon from a first of said plurality of locations in said media drawer window to a second of said plurality of locations in said media drawer window.

11. A method as in claim **1** wherein said media drawer window is attached to said primary window which is moveable on a desktop of said graphical user interface and wherein said media drawer window moves with said primary window as said primary window is moved.

12. A method as in claim **11** wherein objects may be moved into or out of said media drawer window.

13. A method as in claim **12** wherein said objects may be moved by dragging said objects into or out of said media drawer window.

14. A method as in claim **13** wherein said dragging further comprises:

selecting at least one of said objects with a cursor;

moving said cursor with said at least one of said objects to move said at least one of said objects.

15. A method as in claim **13** wherein said media drawer window comprises a plurality of predetermined, tiled regions for receiving said objects.

16. A method as in claim **15** wherein when an object is dragged near one of said tiled regions, said object is automatically aligned within said tiled region when dropped near said one of said tiled regions.

17. A method as in claim **11** wherein said media drawer window appears to slide under said primary window when said media drawer is being closed and appears to slide out from under said primary window when said media drawer is being opened.

18. A method as in claim **11** wherein said media drawer window comprises a handle region which is displayed attached to an edge of said primary window when said media drawer window is in said first display state.

19. A method as in claim **18** wherein said handle region comprises at least one of an open control button and a resize button.

20. A method as in claim **19** wherein said open control button, when dragged in a first direction, opens said media drawer window from said first display state to said second display state and, when dragged in a second direction, closes said media drawer window from said second display state to said first display state.

21. A machine readable medium having stored thereon executable code which causes a machine to perform a method for generating a graphical user interface for display, said graphical user interface to provide functionality for processing time-based media data, said method comprising:

generating a first set of data representing said graphical user interface as a primary window for display;

generating a second set of data representing a media drawer window which in a first display state is at least partially overlapped by said primary window and in a second display state is at least partially viewable in selectable proportions; and

said media window providing a plurality of locations each for displaying a time-based media icon associated with a time-based media file.

22. The machine-readable medium of claim **21**, wherein said method further comprises:

storing said time-based media file as a QuickTime movie.

23. The machine-readable medium of claim **22**, wherein said method further comprises:

accessing said time-based media file from a remote location.

24. The machine-readable medium of claim **22**, wherein said method further comprises:

accessing said time-based media file from a local location.

25. The machine-readable medium of claim **21**, wherein said method further comprises:

receiving said time-based media file from a remote data processing system in response to selection of said time-based media icon associated with said time-based media file.

26. The machine-readable medium of claim **21**, wherein said method further comprises:

storing said time-based media file for playback in response to selection of said time-based media icon associated with said time-based media file.

27. The machine-readable medium of claim **21**, wherein said time-based media file comprises one of video data, audio data, visual data, and a combination of audio and video data.

28. The machine-readable medium claim **21**, wherein said method further comprises:

transferring a set of one or more time-based media icons to a set of one or more of said plurality of locations, such that said set of time-based media icons appear in said media drawer when said media drawer is sufficiently non-overlapped by said primary window, and each of said set of time-based media icons is associated with a particular media file, which particular media file is played back in response to selection of a particular one of said set of time-based media icons associated therewith.

29. The machine-readable medium of claim **21**, wherein said method further comprises:

generating a secondary window within said primary window, said secondary window for displaying motion image media associated with a time-based media icon of said media drawer window.

30. The machine-readable medium of claim **21**, wherein said method further comprises:

transferring said time-based media icon from a first of said plurality of locations in said media drawer window to a second of said plurality of locations in said media drawer window.

31. A data processing system for generating a graphical user interface for display, said graphical user interface to provide functionality for processing time-based media data, said data processing system comprising:

a first means for generating a first set of data representing said graphical user interface as a primary window for display on a display means;

a second means for generating second set of data representing a media drawer window which, in response to a user input, controllably slides said media drawer window relative to said primary window on said display means such that said media window appears to be at least partially overlapped by said primary window, wherein said user input controls a proportion of said media window that appears to be overlapped by said primary window relative to a proportion of said media window that is viewable on said display means; and

a third means for providing in said media drawer a plurality of channel windows, wherein each of said plurality of channel windows provides a location for displaying a time-based media icon associated with a time-based media file, wherein selection of said time-based media icon by a user causes said data processing system to playback said time-based media file.

32. The data processing system of claim **31**, wherein said time-based media file comprises a QuickTime movie.

33. The data processing system of claim **31**, further comprising a network interface means for receiving said time-based media file from a remote data processing system in response to selection of said time-based media icon associated with said time-based media file.

34. The data processing system of claim **31**, further comprising a storage means for storing said time-based media file for playback in response to selection of said time-based media icon associated with said time-based media file.

35. The data processing system of claim **31**, wherein said time-based media file comprises one of video data, audio data, visual data, and a combination of audio and video data.

36. The data processing system of claim **31**, further comprising:

a fourth means for transferring a set of one or more time-based media icons to a set of one or more of said plurality of channel windows, such that said set of time-based media icons appear in said media drawer when said media drawer is sufficiently non-overlapped by said primary window, and each of said set of time-based media icons is associated with a particular media file, which particular media file is played back by said data processing system in response to selection of a particular one of said set of time-based media icons associated therewith.

37. The data processing system of claim **31**, further comprising:

a fourth means for generating a secondary window within said primary window, said secondary window for displaying motion image media associated with said time-based media file.

38. The data processing system of claim **31**, further comprising:

a fourth means for transferring said time-based media icon from said location in said plurality of channel windows to another location in said plurality of channel windows.

39. The data processing system of claim **31**, further comprising:

a fourth means for transferring said time-based media icon from said location in said plurality of channel windows to another location of said display means.

40. A method for generating a graphical user interface for display, said graphical user interface to provide functionality for processing time-based media data, said method comprising:

generating a first set of data representing said graphical user interface as a primary window for display;

generating a second set of data representing an auxiliary drawer window which in a first display state is at least partially overlapped by said primary window and in a second display state is at least partially viewable; and

said auxiliary drawer window providing one of information relating to, and functionality for presentation of, a time-based media file.

41. The method of claim **40**, further comprising:

storing said time-based media file as a QuickTime movie.

42. The method of claim **41**, further comprising:

storing said time-based media file at a remote location accessible through a data processing network.

43. The method of claim **41**, further comprising:

storing said time-based media file on a machine-readable medium at a local location.

44. The method of claim **40**, further comprising:

receiving said time-based media file from a remote data processing system in response to selection of a time-based media icon associated with said time-based media file, said time-based media icon being displayed by a channel well drawer window.

45. The method of claim **40**, further comprising:

said functionality including a set of audio control mechanisms each for controlling a characteristic of audio information included in said media file.

46. The method of claim **40**, wherein said time-based media file comprises one of video data, audio data, visual data, and a combination of audio and video data.

47. The method of claim **45**, wherein said set of audio control mechanisms comprises at least one of bass control, treble control, and balance control.

48. The method of claim **40**, further comprising:

said functionality including providing a set of time-based media play back control mechanisms, including at least one of a forward step control, a reverse step control, a forward scan control, a reverse scan control, a go to beginning control, and a go to end control.

49. The method of claim **40**, further comprising:

detecting user input; and

in response to detecting said user input, displaying said auxiliary window as a drawer that previous to said user input appears overlapped by said primary window.

50. A method as in claim **40** wherein said auxiliary drawer window is attached to said primary window which is moveable on a desktop of said graphical user interface and wherein said auxiliary drawer window moves with said primary window as said primary window is moved.

51. A method as in claim **50** wherein objects may be moved into or out of said auxiliary drawer window.

52. A method as in claim **51** wherein said objects may be moved by dragging said objects into or out of said auxiliary drawer window.

53. A method as in claim **52** wherein said dragging further comprises:

selecting at least one of said objects with a cursor;

moving said cursor with said at least one of said objects to move said at least one of said objects.

54. A method as in claim **52** wherein said auxiliary drawer window comprises a plurality of predetermined, tiled regions for receiving said objects.

55. A method as in claim **54** wherein when an object is dragged near one of said tiled regions, said object is automatically aligned within said tiled region when dropped near said one of said tiled regions.

56. A method as in claim **50** wherein said auxiliary drawer window appears to slide under said primary window when said auxiliary drawer is being closed and appears to slide out from under said primary window when said auxiliary drawer is being opened.

57. A method as in claim **50** wherein said auxiliary drawer window comprises a handle region which is displayed attached to an edge of said primary window when said auxiliary drawer window is in said first display state.

58. A method as in claim **57** wherein said handle region comprises at least one of an open control button and a resize button.

59. A method as in claim **58** wherein said open control button, when dragged in a first direction, opens said auxiliary drawer window from said first display state to said second display state and, when dragged in a second direction, closes said auxiliary drawer window from said second display state to said first display state.

60. A machine readable medium having stored thereon executable code which causes a machine to perform a method for generating a graphical user interface for display, said graphical user interface to provide functionality for processing time-based media data, said method comprising:

generating a first set of data representing said graphical user interface as a primary window for display;

generating a second set of data representing an auxiliary drawer window which in a first display state is at least partially overlapped by said primary window and in a second display state is at least partially viewable; and

said auxiliary drawer window providing one of information relating to, and functionality for presentation of, a time-based media file.

61. The machine-readable medium of claim **60**, wherein said method further comprises:

storing said time-based media file as a QuickTime movie.

62. The machine-readable medium of claim **61**, wherein said method further comprises:

accessing said time-based media file from a remote location.

63. The machine-readable medium of claim **61**, wherein said method further comprises:

accessing said time-based media file from a local location.

64. The machine-readable medium of claim **60**, wherein said method further comprises:

receiving said time-based media file from a remote data processing system in response to selection of a time-based media icon associated with said time-based media file.

65. The machine-readable medium of claim **60**, wherein said method further comprises:

said functionality including a set of audio control mechanisms each for controlling a characteristic of audio information included in said media file.

66. The machine-readable medium of claim **60**, wherein said time-based media file comprises one of video data, audio data, visual data, and a combination of audio and video data.

67. The machine-readable medium claim **60**, wherein said set of audio control mechanisms comprises at least one of bass control, treble control, and balance control.

68. The machine-readable medium of claim **60**, wherein said method further comprises:

said functionality including providing a set of time-based media play back control mechanisms, including at least one of a forward step control, a reverse step control, a forward scan control, a reverse scan control, a go to beginning control, and a go to end control.

69. The machine-readable medium of claim **60**, wherein said method further comprises:

detecting user input; and

in response to detecting said user input, displaying said auxiliary window as a drawer that previous to said user input appears overlapped by said primary window.

70. A data processing system for generating a graphical user interface for display, said graphical user interface to provide functionality for processing time-based media data, said data processing system comprising:

a first means for generating a first set of data representing said graphical user interface as a primary window for display on a display means;

a second means for generating a second set of data representing an auxiliary window which, in response to a user input, is displayed on said display means as a drawer window relative to said primary window; and

a third means for providing in said auxiliary drawer one of information about a time-based media file and a set of function means for controlling presentation of said time-based media file.

71. The data processing system of claim **70**, wherein said time-based media file comprises a QuickTime movie.

72. The data processing system of claim **70**, further comprising a network interface means for receiving said time-based media file from a remote data processing system.

73. The data processing system of claim **70**, further comprising a storage means for storing said time-based media file.

74. The data processing system of claim **70**, wherein said time-based media file comprises one of video data, audio data, visual data, and a combination of audio and video data.

75. The data processing system of claim **70**, wherein said set of function means comprises:

at least one of a means for controlling audio bass output level, a means for controlling audio treble output level, and a means for controlling audio balance output level.

76. The data processing system of claim **70**, further comprising:

a fourth means for generating a secondary window within said primary window, said secondary window for displaying motion image media associated with said time-based media file.

77. The data processing system of claim **70**, wherein said set of function means comprises:

at least one of a means for controlling forward or reverse scanning of said time-based media file, a means for controlling forward and reverse stepping of said time-based media file.

* * * * *