US 20030044162A1

(19) United States

(12) Patent Application Publication (10) Pub. No.: US 2003/0044162 A1

Angel (43) Pub. Date: Mar. 6, 2003

(54) IMPLEMENTATION OF MANDATORY SEGMENTS IN MULTIMEDIA CONTENT

(75) Inventor: **Janevski Angel**, New York, NY (US)

Correspondence Address:
Corporate Patent Counsel;
U.S. Philips Corporation;
580 White Plains Road
Tarrytown, NY 10591 (US)

(73) Assignee: **KONINKLIJKE PHILIPS ELECTRONICS N.V.**

(21) Appl. No.: **09/945,953**

(22) Filed: **Sep. 4, 2001**

Publication Classification

(51) **Int. Cl.**[7] **H04N 5/93**

(52) **U.S. Cl.** **386/55**; 386/52

(57) **ABSTRACT**

Techniques are provided for enforcing mandatory segments in multimedia content. Generally, a command is received and it is determined if a duration of the command affects a mandatory segment of the multimedia content. If so, the command and the duration are used to determine if the mandatory segment should be enforced and, therefore, played to a user. Additionally, a segment lifetime and mandatory level add flexibility by providing additional options to enforce mandatory segments if certain predetermined conditions are met. Finally, mandatory segments that meet predetermined criteria may be replaced by additional mandatory segments.

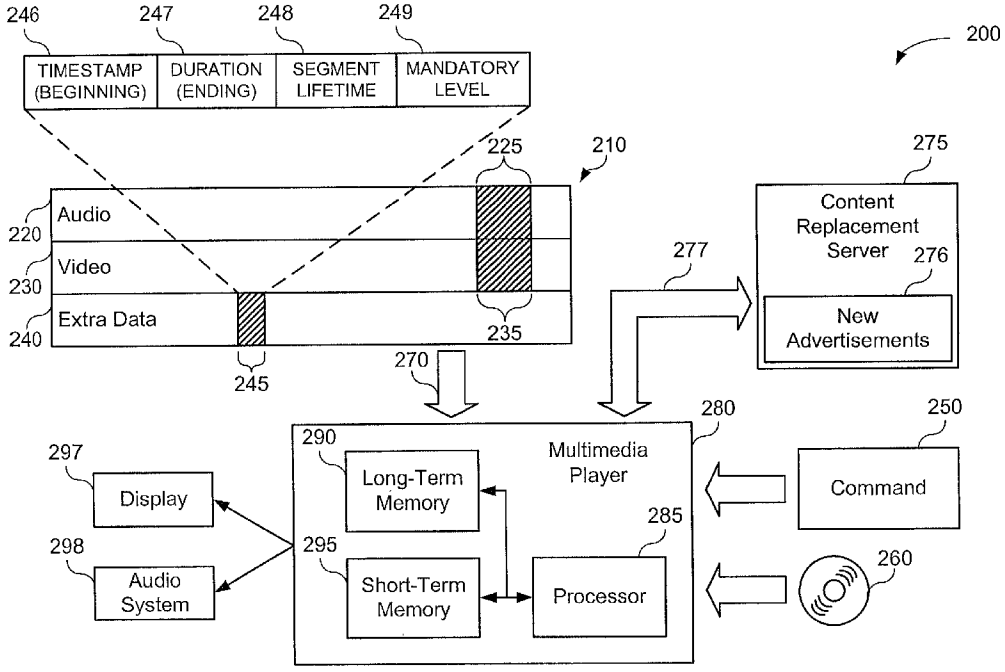

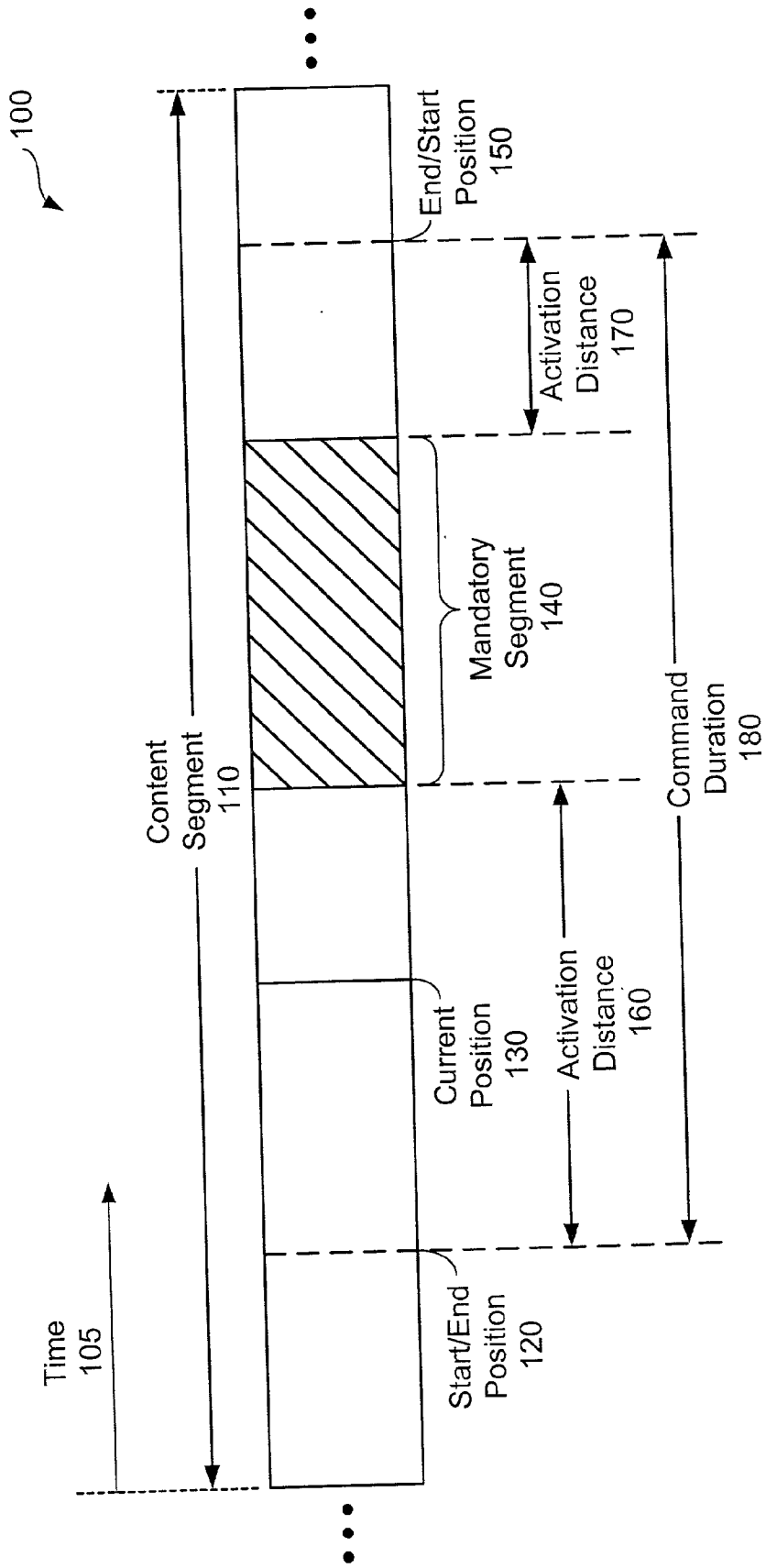
100
Time
105
Content
Segment
110
Start/End
Position
120
Current
Position
130
Mandatory
Segment
140
End/Start
Position
150
Activation
Distance
160
Activation
Distance
170
Command
Duration
180

FIG. 1

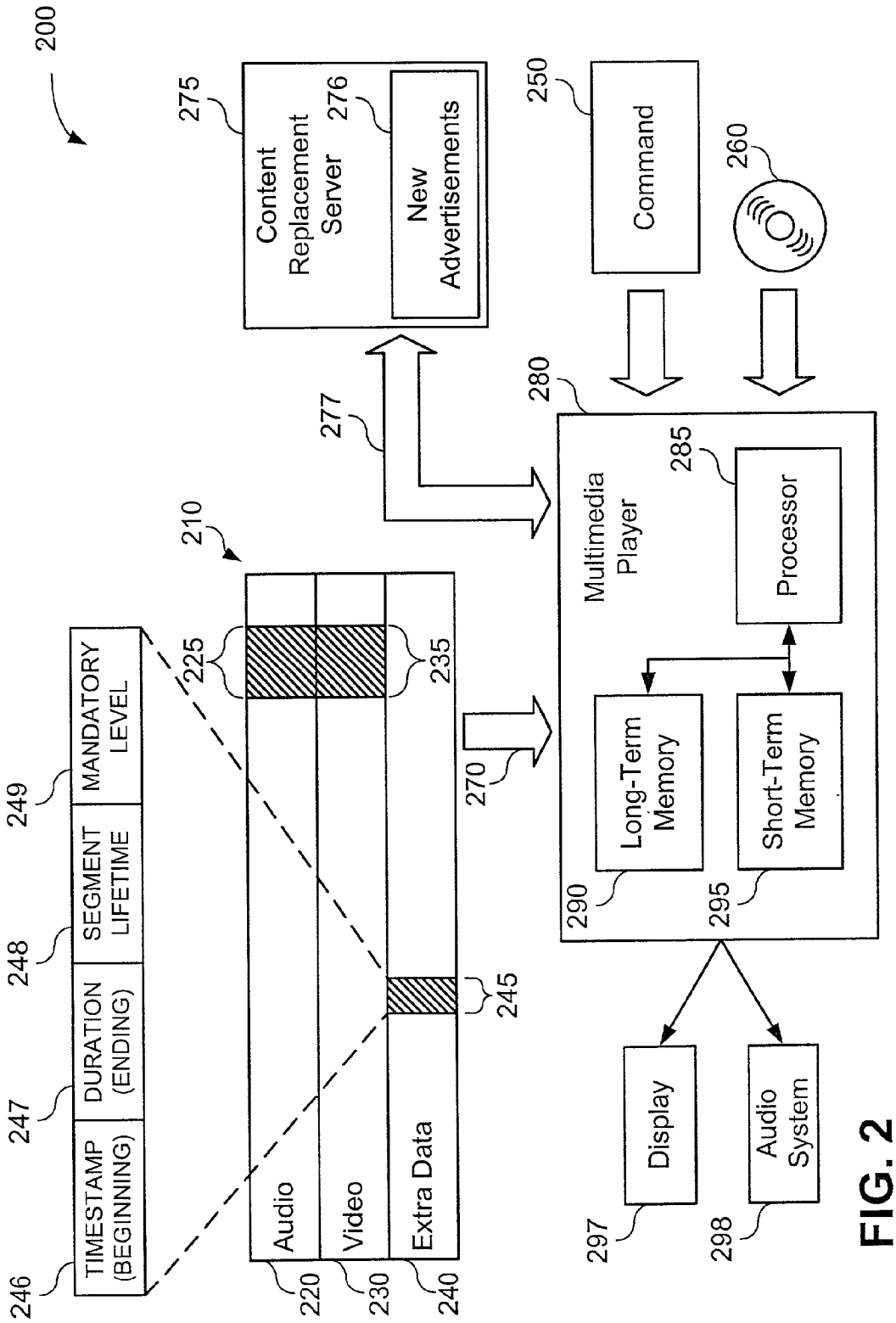
200
275
Content Replacement Server
276
New Advertisements
250
Command
260
277
280
Multimedia Player
285
Processor
210
225
235
270
Long-Term Memory
Short-Term Memory
290
295
249
MANDATORY LEVEL
248
SEGMENT LIFETIME
247
DURATION (ENDING)
246
TIMESTAMP (BEGINNING)
Audio
Video
Extra Data
245
220
230
240
Display
Audio System
297
298

FIG. 2

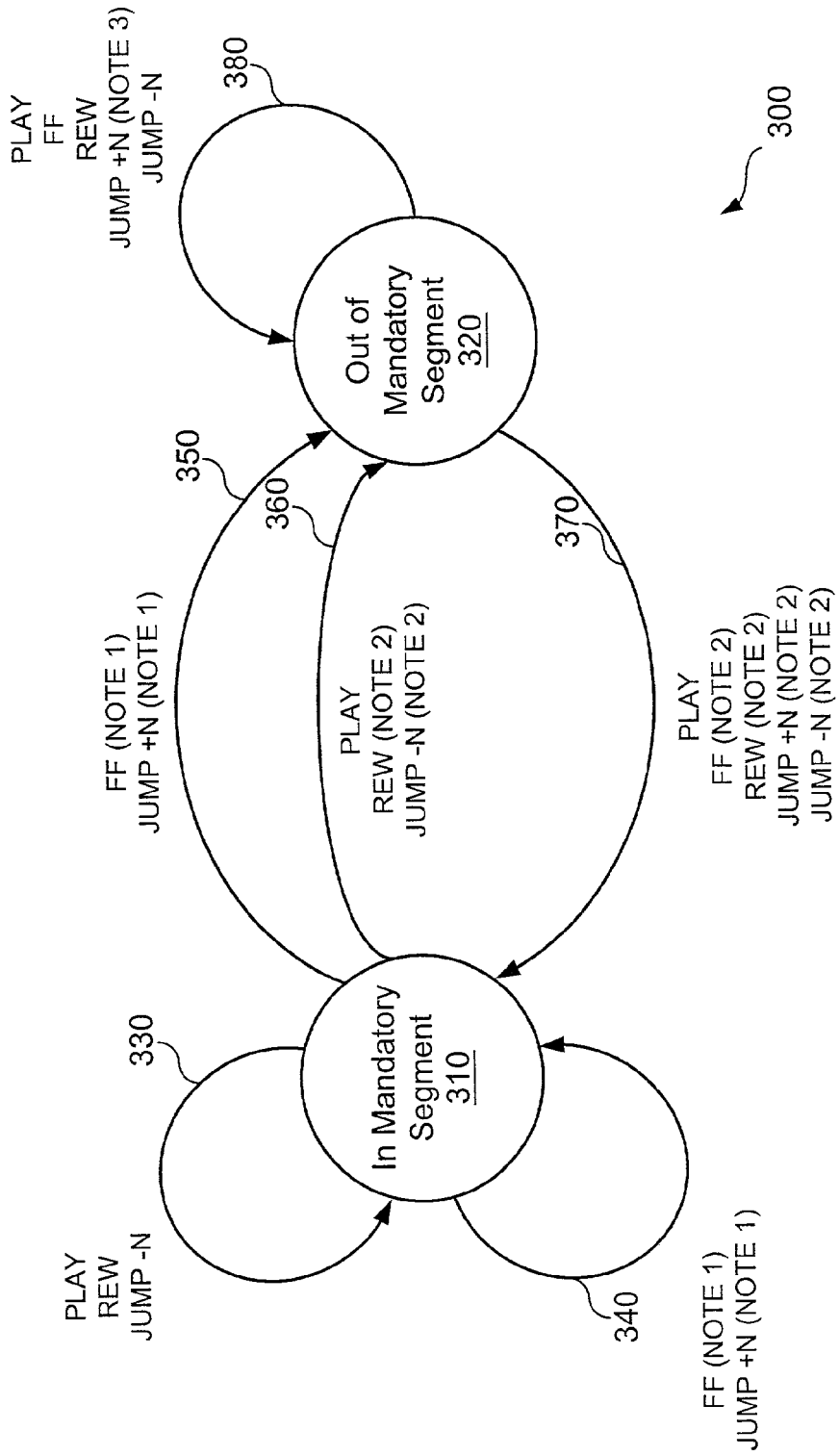
300
In Mandatory Segment 310
Out of Mandatory Segment 320
330
PLAY
REW
JUMP -N
340
FF (NOTE 1)
JUMP +N (NOTE 1)
350
FF (NOTE 1)
JUMP +N (NOTE 1)
360
PLAY
REW (NOTE 2)
JUMP -N (NOTE 2)
370
PLAY
FF (NOTE 2)
REW (NOTE 2)
JUMP +N (NOTE 2)
JUMP -N (NOTE 2)
380
PLAY
FF
REW
JUMP +N (NOTE 3)
JUMP -N

FIG. 3

IMPLEMENTATION OF MANDATORY SEGMENTS IN MULTIMEDIA CONTENT

FIELD OF THE INVENTION

[0001] The present invention relates to multimedia, and more particularly, to an implementation of mandatory segments in multimedia content.

BACKGROUND OF THE INVENTION

[0002] Currently, broadcasted multimedia content is treated in the same manner throughout the broadcast. Thus, no section of the content is any different or more important than any other section. Multimedia content often includes mandatory segments that someone, such as the content owner or an advertiser, wishes to be presented to the user. Thus, while the mandatory segments must be presented to a user, a user can selectively access any other part of the multimedia content. For example, a content owner typically employs a mandatory Digital Versatile Disk (or "Digital Video Disk") introduction, in which a copyright notice is usually displayed.

[0003] Likewise, there is a tendency among advertisers to introduce mandatory segments of content (e.g., commercials) that the user will not be able to skip while playing the content. For instance, some movies contain commercials for a particular product directly in the movies. Implementing these mandatory segments may be too annoying and disruptive for the users and may have the effect of completely diverting the user from such programs.

[0004] A need therefore exists for techniques that allow mandatory sections of multimedia content, yet also provide flexibility.

SUMMARY OF THE INVENTION

[0005] The present invention provides techniques for enforcing mandatory segments in multimedia content, while at the same time providing a large amount of flexibility. Generally, a multimedia command is processed by a multimedia player and it is determined if a duration of the command affects a mandatory segment of the multimedia content. If so, the command and the duration are used to determine if the mandatory segment should be enforced and, therefore, played to a user. Additionally, a segment lifetime and mandatory level add flexibility by providing additional options to enforce mandatory segments if certain predetermined conditions are met. This allows the mandatory segments to be effectively played and yet does not require the mandatory segments to be played each and every time they are affected by a command. Finally, mandatory segments that meet predetermined criteria may be replaced by additional mandatory segments. This allows, for instance, a more recent mandatory segment to replace an out-of-date mandatory segment.

[0006] A more complete understanding of the present invention, as well as further features and advantages of the present invention, will be obtained by reference to the following detailed description and drawings.

BRIEF DESCRIPTION OF THE DRAWINGS

[0007] **FIG. 1** shows multimedia content, in accordance with a preferred embodiment of the invention;

[0008] **FIG. 2** shows a system for implementing mandatory segments in multimedia content, in accordance with a preferred embodiment of the invention; and

[0009] **FIG. 3** shows a state diagram used to implement mandatory segments in multimedia content, in accordance with a preferred embodiment of the invention.

DETAILED DESCRIPTION

[0010] The present invention provides techniques for enforcing mandatory segments in multimedia content. A mandatory segment is a portion of the multimedia content that someone, usually an advertiser, wishes the viewer or listener to see or hear. The present invention enforces mandatory segments by receiving a command and determining if a duration of the command affects one or more mandatory segments. The command affects the mandatory segment if the duration ends in the mandatory segment, begins in the mandatory segment, encompasses the mandatory segment, or begins and ends in the mandatory segment. In other words, if the command potentially causes a portion of a mandatory segment to be skipped or missed, the command affects the mandatory segment. This is explained in more detail below in reference to **FIG. 1**.

[0011] When the command affects a mandatory segment, the present invention interprets the command and its duration and determines whether or not the mandatory segment should be enforced. The present invention may also refer to a segment lifetime or a mandatory level or both to determine if a mandatory segment should be enforced. Enforcing the mandatory segment entails playing the video, audio, or both that comprise the mandatory segment. Additionally, the present invention can execute scripts or applications, such as a Java application, to enforce a mandatory segment. As is known in the art, Java is a programming language that allows programs to be executed on a wide variety of platforms.

[0012] It should be noted that the present invention may be implemented in analog systems, such as systems that receive analog television signals. However, it will be assumed herein that digital transmission and reception of the multimedia content is being used.

[0013] Referring now to **FIG. 1**, this figure shows multimedia content **100** in accordance with a preferred embodiment of the invention. **FIG. 1** is used to illustrate some terminology discussed herein. Multimedia content **100** comprises content segment **110**, and additional content not shown. Content segment **110** comprises start/end position **120**, current position **130**, mandatory segment **140**, end/start position **150**, activation distances **160** and **170**, and command duration **180**. Time **105** indicates the progression of time for content segment **110**.

[0014] Content segment **110** is a portion of multimedia content **100**, and content segment **110** could be video, audio, both audio and video, an application, a script, or a combination of any of these. Mandatory segment **140** is scheduled to occur at its indicated location, if the viewer decides to play the entire content segment **110**.

[0015] Commands have a duration, which has a start and an end time or frame. For instance, a Jump+N command, where N is a time or a number of frames, might start at location start/end position **120** and end at location end/start

position **150**. In this instance, the activation distance **160** is the time or distance from start/end position **120** to the beginning of the mandatory segment **140**.

[**0016**] Alternatively, a Jump–N command might start at location end/start position **150** and end at start/end position **120**. In this case, the activation distance **170** is the time or distance from the end/start position **150** to the end of the mandatory segment **140**.

[**0017**] Thus, a command will begin at some time or location and end at another time or location. Each command therefore has a duration, which could be measured by time, frames, an amount of data, or the like. For some commands, the duration is immediately determinable. For instance, a Jump+N command will occur at a particular starting point and the ending point of the command is immediately determinable. Therefore, the duration of the command is immediately apparent. Other commands have durations that are not immediately apparent but will be known after a time. For instance, a Fast Forward command will begin at a particular point during playing of the multimedia content. The Fast Forward command will end at some point in the future. Although this ending point is not immediately apparent, the Fast Forward command will have a duration once the command ends. What is important is to determine if the command affects a mandatory segment.

[**0018**] Each command can affect a mandatory segment. In the example of **FIG. 1, a** command that begins at start/end position **120** and ends at end/start position **150** has a command duration **180**, and this command affects mandatory segment **140** because it encompasses mandatory segment **140**. Advertisers pay to have their advertisements (e.g., mandatory segment **140**) shown, and skipping over the advertisements is detrimental to the interests of the advertisers.

[**0019**] The activation distances **160** are used to determine whether or not the mandatory segment **140** should be enforced. If the activation distance **160** is too long, then the mandatory segment **140** might not be enforced. For example, if a user jumps one hour of a two hour video, there could be quite a few mandatory segments **140** in this one hour. In this situation, the mandatory segments within the one hour might not be played.

[**0020**] Current position **130** is the position in which the multimedia content currently resides. The situation shown in **FIG. 1** could occur, for instance, if a Fast Forward command is begun at start position **120** and will end at end position **150**. In this situation, mandatory segment **140** may be played, in its entirety, if certain conditions are met.

[**0021**] Referring now to **FIG. 2, a** system **200** is shown for implementing mandatory segments in multimedia content, in accordance with a preferred embodiment of the invention. System **200** comprises multimedia content **210**, a channel **270**, a multimedia player **280**, a display **297**, an audio system **298**, a command **250**, a Digital Versatile Disk (DVD) **260**, a network **277**, and a content replacement server **275**. Content replacement server comprises new advertisements **276**. In the example of **FIG. 2**, the multimedia content **210** comprises audio portion **220**, video portion **230**, and extra data **240**. Multimedia player **280** comprises processor **285**, a long-term memory **290**, and a short-term memory **295**, each of which are interconnected.

[**0022**] Multimedia content **210** is transmitted to multimedia player **280** through channel **270**. Channel **270** can be any type of communication medium known to those skilled in the art, such as a satellite Radio Frequency (RF) signal, a wired analog signal, or a wired digital signal. Additionally, multimedia content **201** may be network streamed, such as video on demand from the Internet (i.e., channel **270**) or any high-speed network connection. Multimedia content **210** comprises audio **220**, video **230**, and extra data **240**. Audio **220** and video **230** content may be compressed or non-compressed. For example, video **230** may be stored in a Motion Picture Experts Group (MPEG) format. Moreover, even though both audio and video are shown in **FIG. 2**, just audio alone or video alone may comprise multimedia content **210**.

[**0023**] Multimedia player **270** can store multimedia content **210** in long-term memory **290**, which will generally be a hard drive or other similar long-term memory. As is known in the art, long-term memory will generally comprise an operating system (not shown), portions of which will be loaded into short-term memory **295** in order to facilitate operation of multimedia player **280**. Additionally, the long-term memory **290** and short-term memory **295** will contain a program (not shown) suitable to carry out implementations of the present invention. Multimedia player **280** will generally be a Digital Video Recorder (DVR), but could be another device, such as an MP3 player. MP3 is the file extension for MPEG, audio layer **3**. Layer **3** is one of three coding schemes for the compression of audio signals.

[**0024**] Multimedia player **280** accepts a command **250** and, based on this command **250** and the duration of the command, will usually play any mandatory segments affected by the command **250**. The command **250** will generally be transmitted to the multimedia player **280** by a remote, but it could be received through other means such as through a button pressed on the multimedia player **280** or over a bus (not shown) that connects the multimedia player **280** with other devices (not shown). Multimedia player plays a mandatory segment on display **297** or audio system **298** or both. Multimedia player **280** can take additional factors into account in determining whether to play a particular mandatory segment. For example, as explained in reference to **FIG. 1**, the multimedia player **280** can take activation distance into account when determining whether to enforce a mandatory segment. Other factors are explained shortly.

[**0025**] **FIG. 2** shows a technique for marking a mandatory segment in multimedia content **210**. Those skilled in the art will realize that there are a variety of effective techniques that can mark a mandatory segment. The shown technique is merely exemplary.

[**0026**] Audio portion **220** contains a mandatory segment **225**. This mandatory segment **225** is described in extra data **240** by description **245**. Similarly, in video portion **230**, there is a mandatory segment **235**. This mandatory segment **235** is also described in extra data **240** by description **245**. Extra data **240** is a location to place additional data, such as the name of a show being broadcast, information about the show, and stock data. This type of extra information is commonly transmitted over satellite transmissions, and is becoming more prevalent in other digital transmission as these transmissions are becoming commonplace.

[0027] Description **245** comprises a timestamp **246**, a duration **247**, a segment lifetime **248**, and a mandatory level **249**. Timestamp **246** comprises a time, relative to a beginning time, when the mandatory segment **235** starts. Duration **247** comprises a time duration that describes how long mandatory segment **235** lasts. For example, timestamp **246** could indicate that the mandatory segment **235** starts 30 minutes after the beginning of a program, while the duration **247** indicates that the mandatory segment **235** is 60 seconds long.

[0028] Alternatively, timestamp **246** could indicate a beginning frame, relative to the start of a program, and duration **247** could indicate an ending frame, relative to the same start or relative to the timestamp **246**. For instance, timestamp **246** could indicate a beginning frame of 54,000 (30 minutes into a show if the frame rate is 30 frames per second) and a duration **247** of 1,800 frames or 55,800 frames (a one minute commercial if the frame rate is 30 frames per second).

[0029] Segment lifetime **248** is a way of forcing a lifetime for a mandatory segment. In one embodiment, the segment lifetime **248** comprises dates during which the mandatory segment should be enforced. This can be useful, for instance, when showing previews for upcoming movies. This would allow a movie studio to place a preview for a movie, a "now playing" advertisement, a "coming soon to DVD" advertisement, and a "now on DVD" advertisement all on the same multimedia content. By selecting the appropriate date ranges for these advertisements, each one will be valid for an appropriate time.

[0030] Alternatively, the segment lifetime **248** can comprise a number that indicates how many times the mandatory segment is to be played. This allows a progressive advertising scheme. For instance, if a user records a movie or television show on a Digital Video Recorder (DVR), the DVR can enforce the playing of a mandatory segment for the number of times indicated by the segment lifetime **248**. The more number of times the advertisement is guaranteed to be played, the more the advertiser will have to pay. Thus, an advertiser will generally pay less to ensure that its advertisement is played once than it will pay to have its advertisement played five times.

[0031] It should be noted that the segment lifetime **248** can include both a date range and a number indicating how many times a mandatory segment should be played. In this case, the date range will generally override the number.

[0032] The techniques discussed for the segment lifetime **248** are only possible implementations of the same. Any implementation may be used that allows mandatory segments to have some lifetime during which they should be played.

[0033] Mandatory level **249** indicates to what extent a mandatory segment is allowed to be skipped. In one embodiment, mandatory level **249** may be "hard" or "soft," where "hard" indicates that the mandatory segment cannot be skipped and "soft" indicates that the mandatory segment can be skipped if certain conditions are met. For example, a copyright notice might be labeled as "hard" such that the copyright notice will be played with each viewing of multimedia content. Alternatively, a mandatory segment might be labeled as "soft" such that a user who is skipping one hour of a television show would also skip this mandatory segment if it resides in the hour.

[0034] Mandatory level **249**, in a second embodiment, allows certain users to skip certain mandatory segments. For instance, users who are supplied a set-top box for free may be required to watch all mandatory segments. Some of these mandatory segments are used to pay for acquisition of the set-top box. However, a user who pays for a set-top box would not be required to watch every mandatory segment. Instead, the mandatory segments that are used to pay for acquisition of the set-top box would be skipped.

[0035] In fact, there could be multiple levels in mandatory level **249**, such that users who pay the most would have the fewest mandatory segments played to them. Essentially, an advertiser would pay a certain amount for the level placed in the mandatory level **249**. The multimedia player **280** would know how much the user has paid to not receive mandatory segments. Based on this information, the multimedia player **280** will only play those mandatory segments that meet the appropriate level. For instance, assume that there are 10 levels. The user might pay through the fifth level. The multimedia player **280** will therefore play only those mandatory segments whose mandatory level **249** is labeled a six or higher.

[0036] Multimedia player **280** keeps track of each mandatory segment, how many times a segment has been played, and whether a user has paid to skip the playing of certain levels. This information will generally be stored in long-term memory **290**. Alternatively, some of this information may be stored with the mandatory segment itself. For example, it is technically possible for a mandatory segment, such as commercial, to be a Java program for a script. As is known in the art, Java is a programming language that allows applications to run on a wide variety of platforms. In this embodiment, a commercial that is a Java application or script could keep track of the number of times it has been played and whether a user can force a skip of playing the commercial.

[0037] Content replacement server **275** is a computer system connected to multimedia player **280** through some type of network connection **277**. This network could be a phone line that connects directly to server **275** or an Internet connection through a wired or wireless phone or local area network connection. Additionally, the connection **277** can be a broadcast connection, such as a satellite or cable connection. If a program is stored in long-term memory **290**, it is possible that, after a time, one or more of the mandatory segments will expire. It is possible for a program to contain multiple commercials (i.e., mandatory segments) that are scheduled to run at different dates but in the same timeslot. For instance, there could be Commercial A, scheduled to run in Timeslot A, and Commercial B, also scheduled to run in Timeslot A. Commercial A might be valid for three months, after which Commercial B will run in Timeslot A.

[0038] Instead of or in addition to the latter system, if a mandatory segment expires, the multimedia player contacts content replacement server **275**. The content replacement server **275** determines if the old mandatory segment, stored in long-term memory **290**, is still valid. If so, the content replacement server **275** adjusts the segment lifetime **248** accordingly. It should also be noted that content replacement server **275** can adjust mandatory level **249**, should this need adjusting.

[0039] If the mandatory segment is no longer valid, the content replacement server **275** can send a new mandatory

segment from new advertisements **276**. For instance, a user can records a program that contains an advertisement for an automobile. If the user watches the program at some later date, say six months later, then a new model of the car may be available. In this case, the content replacement server **275** would download a new advertisement for the new model to the long-term memory **290**. If there are any time differences between the old and new advertisements (e.g., going from a 30 second commercial to a one-minute commercial), the multimedia player **280** can make the appropriate adjustments.

[**0040**] Content replacement server **275** thus allows a recorded program to have multiple advertisements, each advertisement having a certain segment lifetime **248**, which could be based on number of times played or dates. In fact, content replacement server **275** could be made to change mandatory segments each time the program is played.

[**0041**] It should also be noted that the mandatory segments may be separated from the program for which they are to be played. For example, mandatory segments **225** and **235** could be stored in extra data **240**.

[**0042**] As is known in the art, the methods and apparatus discussed herein may be distributed as an article of manufacture that itself comprises a computer-readable medium having computer-readable code means embodied thereon. The computer-readable code means is operable, in conjunction with a computer system such as multimedia player **280**, to carry out all or some of the steps to perform the methods or create the apparatuses discussed herein. The computer-readable medium may be a recordable medium (e.g., floppy disks, hard drives, DVD **260**, or memory cards) or may be a transmission medium (e.g., a network comprising fiber-optics, the world-wide web, cables, or a wireless channel using time-division multiple access, code-division multiple access, or other radio-frequency channel). Any medium known or developed that can store information suitable for use with a computer system may be used. The computer-readable code means is any mechanism for allowing a computer to read instructions and data, such as magnetic variations on a magnetic medium or height variations on the surface of a compact disk, such as DVD **260**.

[**0043**] Short-term memory **295** or long-term memory **290** configures the processor **285** to implement the methods, steps, and functions disclosed herein. The short-term memory **295** or long-term memory **290** could be distributed or local and the processor **285** could be distributed or singular. The short-term memory **295** or long-term memory **290** could be implemented as an electrical, magnetic or optical memory, or any combination of these or other types of storage devices. Moreover, the term "memory" should be construed broadly enough to encompass any information able to be read from or written to an address in the addressable space accessed by processor **285**. With this definition, information on a network is still within short-term memory **295** or long-term memory **290** because the processor **285** can retrieve the information from the network. It should be noted that each distributed processor that makes up processor **285** generally contains its own addressable memory space. It should also be noted that some or all of multimedia player **280** can be incorporated into an application-specific or general-use integrated circuit.

[**0044**] Turning now to **FIG. 3, a** state diagram **300** is shown that is used to implement mandatory segments in multimedia content, in accordance with a preferred embodiment of the invention. State diagram **300** comprises two states, "In Mandatory Segment" state **310** and "Out of Mandatory Segment" state **320**. These states are states that indicate where a command starts or ends. In Mandatory Segment state **310** means that the command starts or ends in a mandatory segment. Out of Mandatory Segment state **320** means that a command starts or ends in a location that is not mandatory. Basically, there are commands that do not skip any portion of a mandatory segment and commands that do skip some or all of a mandatory segment. The former are generally freely allowed, while the latter are generally modified somewhat to ensure that the mandatory segment gets played as required by an agreement with an advertiser.

[**0045**] Transition **330** indicates a transition from In Mandatory Segment state **310** to In Mandatory Segment state **310**. The commands that cause this are Play, Rewind (REW), and Jump−N. Because these commands remain inside the mandatory segment and do not skip any material in the mandatory segment, they are freely allowed.

[**0046**] Transition **340** also indicates a transition from In Mandatory Segment state **310** to In Mandatory Segment state **310**. However, the two commands that cause this transition are Fast Forward (FF) and Jump+N. These commands cause a portion of the mandatory segment to be missed. Consequently, these commands can either be rejected or buffered for execution after the mandatory segment. The "Note 1" in **FIG. 3** refers to the fact that these commands can either be rejected or buffered for execution after the mandatory segment.

[**0047**] The commands that create transitions **330** and **340** have a duration that is smaller than the mandatory segment.

[**0048**] Transition **350** is created by Fast Forward and Jump+N commands that start when the mandatory segment is being played and that end when the mandatory segment is no longer being played. Both the Fast Forward and the Jump+N command cause a portion of the mandatory segment to be missed. Consequently, they are subjected to Note 1, which means that these commands can either be rejected or buffered for execution after the mandatory segment.

[**0049**] Transition **360** is created by Play, Rewind, and Jump−N commands that start in In Mandatory Segment state **310** but end in Out of Mandatory Segment state **320**. The Play command does not cause any portion of the mandatory segment to be missed. Consequently, this command is accepted and acted upon without reservation.

[**0050**] However, the Rewind and Jump−N commands will cause a user to miss some of the mandatory segment. A multimedia player, when receiving these commands when in state **310**, will therefore automatically execute Play from the beginning of the mandatory segment. The "Note 2" indicates that a multimedia player will automatically accept and execute Play from the beginning of the mandatory segment. This ensure that the mandatory segment, if it should be played, will be played.

[**0051**] Out of Mandatory Segment state **320** has two transitions **370** and **380** that transition out of the state. Transition **370** is caused by commands that start in Out of Mandatory Segment state **320** and that end in In Mandatory Segment state **310**. Transition **370** is created by the commands Play, Fast Forward, Rewind, Jump+N, and Jump−N.

Play, because it causes a mandatory segment to be played and none of the mandatory segment to be skipped, is accepted and executed. The other commands cause some of the mandatory segment to be missed. Consequently, these commands are also subjected to Note 2, which means that a multimedia player will automatically accept and execute the command Play from the beginning of the mandatory segment. It should be noted that these commands may be buffered and continued once the mandatory segment is shown. For example, a Fast Forward command could fast forward until a mandatory segment, the mandatory segment will be played, and then fast forwarding will continue after the mandatory segment is played.

[**0052**] Transition **380** is caused by commands that start in Out of Mandatory Segment state **320** and that end in Out of Mandatory Segment state **320**. These commands are Play, Fast Forward, Rewind, Jump+N, and Jump−N. The Jump+N command is subjected to "Note 3," which means that, in case of skipping entire mandatory segments with this command, the command could be switched to PLAY for some of the intermediate mandatory segments.

[**0053**] It should be noted that **FIG. 3** is one particular implementation of a state diagram for mandatory segments. Other implementations are possible. For instance, a Jump−N command, from Out of Mandatory Segment state **320** to Out of Mandatory Segment state **320** where the Jump−N command skips a mandatory segment, could cause a mandatory segment to be viewed. Additionally, Rewind and Jump−N commands from In Mandatory Segment state **310** to Out of Mandatory Segment state **320** could allow a portion of the mandatory segment to be skipped. However, any subsequent playing of the multimedia content, where the playing starts after the mandatory segment, will cause the mandatory segment to be played.

[**0054**] It should also be noted that activation distance can modify state diagram **300**. For example, Jump commands where a large section of multimedia content is being jumped might not cause the mandatory segments within the jumped portion to be played. This is helpful, for instance, when viewing television programs. If a person tapes a two-hour sports event, and skips the first hour, there could be a large amount of commercials in the skipped hour. It might be onerous to cause this person to view all the commercials in the hour. Instead, they can be skipped because the duration of the Jump command meets a predetermined activation distance, and this causes all the mandatory segments to be skipped.

[**0055**] Finally, **FIG. 3** illustrates an embodiment where the mandatory segment is to be played. As discussed above in reference to **FIG. 2**, there are conditions during which a mandatory segment will not be played even if the state diagram **300** of **FIG. 3** shows that it should. For example, a Jump+N that starts in Out of Mandatory Segment state **320** but that jumps over a mandatory segment may not cause the mandatory segment to be played if it has already been played a predetermined number of times.

[**0056**] It is to be understood that the embodiments and variations shown and described herein are merely illustrative of the principles of this invention and that various modifications may be implemented by those skilled in the art without departing from the scope and spirit of the invention.

What is claimed is:

1. A method for implementing mandatory segments in content, the method comprising the steps of:

receiving a command;

determining if a duration of the command affects a mandatory segment in the content; and

determining if the mandatory segment should be played by using the command and the duration.

2. The method of claim 1 further comprising the steps of:

having an advertiser pay a first amount to have its mandatory segment viewed a first number of times; and

having a user pay a second amount; and

wherein the step of determining if the mandatory segment should be played by using the command and the duration further comprises the steps of:

determining a second number of times that the mandatory segment will be played by comparing the first amount to the second amount; and

determining if the mandatory segment should be played by using the command, the duration, and the comparison.

3. The method of claim 1, further comprising the step of marking the mandatory segment as mandatory.

4. The method of claim 3, wherein the content comprises multimedia content.

5. The method of claim 3, wherein the step of the step of marking the mandatory segment as mandatory further comprises the steps of providing two data elements, the first data element indicating where in the content the mandatory segment starts, and the second data element indicating where in the content the mandatory segment ends.

6. The method of claim 1, wherein the duration of the command is immediately determinable.

7. The method of claim 1, wherein the duration of the command is determinable after a time period elapses.

8. The method of claim 1, wherein the command affects the mandatory segment when the duration ends in the mandatory segment, begins in the mandatory segment, encompasses the mandatory segment, or begins and ends in the mandatory segment.

9. The method of claim 1, wherein the step of determining if the mandatory segment should be played by using the command and the duration further comprises the steps of:

determining if the command skips a portion of the mandatory segment; and

ensuring that the portion is played when the command skips a portion of the mandatory segment.

10. The method of claim 1, wherein the step of determining if the mandatory segment should be played by using the command and the duration further comprises the steps of:

determining if the command skips all of the mandatory segment;

determining an activation distance between a start of the duration of the command and the mandatory segment, when the command skips all of the mandatory segment; and

playing the mandatory segment when the activation distance is less than a predetermined amount.

11. The method of claim 1, wherein the step of determining if the mandatory segment should be played by using the command and the duration further comprises the steps of:

determining a present state when the command is received;

determining if the duration of the command causes a transition from the present state to the present state or to a second state; and

determining if the mandatory segment should be played based on the present state, the transition, and the command.

12. The method of claim 1, wherein the step of determining if the mandatory segment should be played by using the command and the duration further comprises the steps of:

providing a segment lifetime;

determining if the mandatory segment has not exceeded its segment lifetime; and

playing the mandatory segment if the mandatory segment has not exceeded its segment lifetime.

13. The method of claim 12, wherein the segment lifetime comprises a date range, and wherein the mandatory segment has not exceeded its segment lifetime if a current date is within the date range.

14. The method of claim 12, wherein the segment lifetime comprises a number of playing times, and wherein the mandatory segment has not exceeded its segment lifetime if a current number of times played is less than the number of playing times.

15. The method of claim 1, wherein the step of determining if the mandatory segment should be played by using the command and the duration further comprises the steps of:

providing a mandatory level;

playing the mandatory segment if the mandatory level meets predetermined criteria.

16. The method of claim 15, wherein:

the mandatory level comprises at least two levels;

a user pays to have a level assigned to the user; and

the step of playing the mandatory segment if the mandatory level meets predetermined criteria further comprises the step of playing the mandatory segment if the mandatory level is greater than the level assigned to the user.

17. The method of claim 1, further comprising the steps of:

determining that a first mandatory segment needs to be replaced; and

replacing the first mandatory segment with a mandatory segment having different content.

18. The method of claim 17, wherein the first mandatory segment has a segment lifetime associated with it, wherein the step of determining that a first mandatory segment needs to be replaced further comprises the step of determining that the mandatory segment has exceeded its segment lifetime, and wherein the step of replacing the first mandatory segment with a mandatory segment having different content further comprises the steps of accessing a computer system having additional mandatory segments and replacing the first mandatory segment with a mandatory segment on the computer system.

19. A system comprising:

a memory that stores computer-readable code; and

a processor operatively coupled to the memory, the processor configured to implement the computer-readable code, the computer-readable code configured to:

receive a command;

determine if a duration of the command affects a mandatory segment in content; and

determine if the mandatory segment should be played by using the command and the duration.

20. An article of manufacture comprising:

a computer-readable medium having computer-readable code means embodied thereon, said computer-readable program code means comprising:

a step to receive a command;

a step to determine if a duration of the command affects a mandatory segment in content; and

a step to determine if the mandatory segment should be played by using the command and the duration.

21. A system for implementing mandatory segments in content, the system comprising:

means for receiving a command;

means for determining if a duration of the command affects a mandatory segment in the content; and

means for determining if the mandatory segment should be played by using the command and the duration.

* * * * *