(12) INTERNATIONAL APPLICATION PUBLSIHED UNDER THE PATENT COOPERATION TREATY (PCT)

(19) World Intellectual Property Organization
International Bureau

(43) International Publication Date
16 February 2017 (16.02.2017)

WIPO | PCT

(10) International Publication Number
WO 2017/024554 A1

(51) International Patent Classification: *H04W 72/04* (2009.01)

(21) International Application Number: PCT/CN2015/086763

(22) International Filing Date: 12 August 2015 (12.08.2015)

(25) Filing Language: Chinese

(26) Publication Language: Chinese

(71) Applicant: HUAWEI TECH CO. LTD. [CN/CN], Huawei Administration Building, Bantian, Longgang District, Shenzhen, Guangzhou 518129 (CN).

(72) Inventors: **YAN, Zhiyu;** Huawei Administration Building, Bantian, Longgang District, Shenzhen, Guangzhou 518129 (CN). **GUAN, Lei;** Huawei Administration Building, Bantian, Longgang District, Shenzhen, Guangzhou 518129 (CN). **LYU, Yongxia;** Huawei Administration Building, Bantian, Longgang District, Shenzhen, Guangzhou 518129 (CN).

(74) Agent: **LEADER PATENT & TRADEMARK FIRM**; 8F-6 Bldg. A, Winland International Center No. 32 Xizhimen North Street, Haidian District, Beijing, 100082(CN).

(81) Designated States (unless otherwise indicated, for every kind of national protection available): AE, AG, AL, AM, AO, AT, AU, AZ, BA, BB, BG, BH, BN, BR, BW, BY, BZ, CA, CH, CL, CN, CO, CR, CU, CZ, DE, DK, DM, DO, DZ, EC, EE, EG, ES, FI, GB, GD, GE, GH, GM, GT, HN, HR, HU, ID, IL, IN, IR, IS, JP, KE, KG, KN, KP, KR, KZ, LA, LC, LK, LR, LS, LU, LY, MA, MD, ME, MG, MK, MN, MW, MX, MY, MZ, NA, NG, NI, NO, NZ, OM, PA, PE, PG, PH, PL, PT, QA, RO, RS, RU, RW, SA, SC, SD, SE, SG, SK, SL, SM, ST, SV, SY, TH, TJ, TM, TN, TR, TT, TZ, UA, UG, US, UZ, VC, VN, ZA, ZM, ZW.

(84) Designated States *(unless otherwise indicated, for every kind of regional protection available):* ARIPO (BW, GH, GM, KE, LR, LS, MW, MZ, NA, RW, SD, SL, ST, SZ, TZ, UG, ZM, ZW), Eurasia (AM, AZ, BY, KG, KZ, RU, TJ, TM), Europe (AL, AT, BE, BG, CH, CY, CZ, DE, DK, EE, ES, FI, FR, GB, GR, HR, HU, IE, IS, IT, LT, LU, LV, MC, MK, MT, NL, NO, PL, PT, RO, RS, SE, SI, SK, SM, TR), OAPI (BF, BJ, CF, CG, CI, CM, GA, GN, GQ, GW, KM, ML, MR, NE, SN, TD, TG).

Declaration according to Rule 4.17:

— Regarding the applicant's entitlement to apply for and be granted a patent (Rule 4.17(ii))

[see overleaf]

(54) Title: METHOD, APPARATUS, AND SYSTEM FOR SENDING AND RECEIVING UPLINK CONTROL INFORMATION

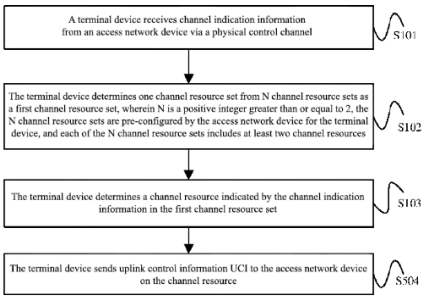

FIG. 1

S101 A terminal device receiving channel indication information from an access network device via a physical control channel
S102 The terminal device determining one channel resource set from N channel resource sets to be a first channel resource set, wherein N is a positive integer greater than or equal to 2, the N channel resource sets being pre-configured for the terminal device by the access network device, and each of the N channel resource sets comprising at least two channel resources
S103 The terminal device determining a channel resource indicated by the channel indication information in the first channel resource set
S504 The terminal device sending, on the channel resource, uplink control information (UCI) to the access network device

(57) Abstract: Embodiments of the present invention provide a method, apparatus, and system for sending and receiving uplink control information. The method comprises: a terminal device receiving channel indication information from an access network device via a physical control channel; determining, from N channel resource sets, a channel resource set matching the type or the size of the UCI as a first channel resource set, and determining a channel resource indicated by the channel indication information in the first channel resource set; and sending the uplink control information UCI to the access network device on the channel resource. A quantity of bits that needs to be added to channel indication information in the embodiments of the present invention is less than that in the prior art, which reduces consumption of downlink channel resources by the channel indication information in a downward transmission process.

WO 2017/024554 A1

This international publication:

— includes the international search report (PCT Article 21(3))

METHOD, APPARATUS, AND SYSTEM FOR SENDING AND RECEIVING UPLINK CONTROL INFORMATION

Technical Field

Embodiments of the present invention relate to the technical field of communications, and relate in particular to a method, apparatus, and system for sending and receiving uplink control information.

Background Art

In a Long Term Evolution (LTE) system, an access network device sends downlink data to the same terminal device on at least one of multiple carriers. For downlink data on each carrier, the terminal device separately performs acknowledgment and generates hybrid automatic repeat request-acknowledgment HARQ-ACK information. If acknowledgment succeeds, the terminal device returns acknowledgment (ACK) information. If acknowledgment fails, the terminal device returns negative acknowledgment (NACK) information. The terminal device sends each piece of acknowledgment information to the access network device on a same uplink channel. In addition, the access network device sends a reference signal to the terminal device on each carrier, so that the terminal device detects the reference signal on each carrier to obtain channel state information CSI corresponding to each carrier.

In the prior art, the access network device indicates, by using preconfigured information, a subframe location (which is determined by a subframe offset for feeding back CSI and a period for feeding back the CSI) at which the terminal device feeds back periodic CSI and specific content of the periodic CSI fed back at each location for feeding back the periodic CSI. Herein, the acknowledgment information and/or the CSI are all referred to as uplink control information UCI. Therefore, UCI fed back by the terminal device to the access network device on the uplink channel in some subframes includes only acknowledgment information or includes only periodic CSI information, while UCI fed back in some subframes includes both acknowledgment information and CSI. Because a quantity of bits of CSI fed back by the terminal device in each subframe for feeding back the periodic CSI is not constant, quantities of bits of UCI fed back by the terminal device in different subframes is different. The access network device allocates multiple uplink channels to the terminal device in advance, and before the terminal device feeds

Pegasus_PriorArt_0010298

Petitioners' Exhibit 1009
Ericsson Inc., et al. v. KT Corporation, et al.
Case No. IPR2025-00083; U.S. Patent No. 10,638,463
Page 3 of 59

back UCI, the access network device sends dynamic indication information to the terminal device. The dynamic indication information specifies an uplink channel on which the terminal device feeds back the UCI.

As a quantity of uplink channels allocated by the access network device to the terminal device in advance increases continuously, a quantity of bits of the dynamic indication information delivered by the access network device increases continuously, leading to relatively large consumption of downlink channel resources. In addition, a capacity of the uplink channel specified by the access network device for the terminal device by using the dynamic indication information does not meet a size of the UCI, resulting in low utilization of the uplink channel or discarding of UCI bits.

Summary of the Invention

Embodiments of the present invention provide a method, apparatus, and system for sending and receiving uplink control information, so as to reduce consumption of downlink channel resources, thereby increasing utilization of an uplink channel or preventing losses of UCI bits.

A first aspect provides an uplink control information sending method, comprising:

receiving, by a terminal device, channel indication information from an access network device via a physical control channel;

determining, by the terminal device, one channel resource set from the N channel resource sets, wherein N is a positive integer greater than or equal to 2, the N channel resource sets are pre-configured by the access network device for the terminal device, and each of the N channel resource sets comprises at least two channel resources;

determining, by the terminal device, a channel resource indicated by the channel indication information in the one channel resource set; and

sending, by the terminal device, uplink control information UCI to the access network device on the channel resource.

With reference to the first aspect, in a first possible implementation of the first aspect, before determining, by the terminal device, the one channel resource set from the N channel resource sets, the method further comprises:

determining, by the terminal device, a type of the UCI; and

determining, by the terminal device, the one channel resource set from the N channel

Pegasus_PriorArt_0010299

Petitioners' Exhibit 1009
Ericsson Inc., et al. v. KT Corporation, et al.
Case No. IPR2025-00083; U.S. Patent No. 10,638,463
Page 4 of 59

resource sets comprises: determining, by the terminal device, the one channel resource set matching the type of the UCI from the N channel resource sets.

With reference to the first possible implementation of the first aspect, in a second possible implementation of the first aspect, the type of the UCI comprises a first type and a second type, and N=2,

wherein the first type of UCI comprises channel state information CSI and hybrid automatic repeat request-acknowledgment HARQ-ACK information, and a channel resource comprised in one of the N channel resource sets is used to send the first type of UCI; and

the second type of UCI comprises HARQ-ACK information but not CSI, and a channel resource comprised in another of the N channel resource sets is used to send the second type of UCI.

With reference to the first aspect, in a third possible implementation of the first aspect, before determining, by the terminal device, the one channel resource set from N channel resource sets as the first channel resource set, the method further comprises:

determining, by the terminal device, a size of the UCI; and

determining, by the terminal device, the one channel resource set from the N channel resource sets as the first channel resource set comprises:

determining, by the terminal device, the one channel resource set matching the size K of the UCI from the N channel resource sets as the first channel resource set.

With reference to the third possible implementation of the first aspect, in a fourth possible implementation of the first aspect, determining, by the terminal device, the one channel resource set matching the size K of the UCI from the N channel resource sets as the first channel resource set comprises:

determining, by the terminal device, a capacity range corresponding to each of the N channel resource sets; and

determining, by the terminal device, the one channel resource set from the N channel resource sets as the first channel resource set, so that the size K of the UCI meets $R_{min} \leq K \leq R_{max}$, wherein a capacity range of the one channel resource set is $[R_{min}, R_{max}]$, R_{min} is a minimum value of a capacity of the one channel resource set, and R_{max} is a maximum value of the capacity of the one channel resource set.

With reference to the first aspect or any one of the first to fourth possible implementations

Pegasus_PriorArt_0010300

Petitioners' Exhibit 1009
Ericsson Inc., et al. v. KT Corporation, et al.
Case No. IPR2025-00083; U.S. Patent No. 10,638,463
Page 5 of 59

of the first aspect, in a fifth possible implementation of the first aspect, each of the *N* channel resource sets comprises a same quantity of channel resources.

With reference to the first aspect or any one of the first to fifth possible implementations of the first aspect, in a sixth possible implementation of the first aspect, at least one of the *N* channel resource sets comprises at least two channel resources having different formats.

With reference to the first aspect or any one of the first to fifth possible implementations of the first aspect, in a seventh possible implementation of the first aspect, at least one of the *N* channel resource sets comprises at least two channel resources having a same format but different channel capacities.

With reference to the first aspect or any one of the first to seventh possible implementations of the first aspect, in an eighth possible implementation of the first aspect, before receiving, by the terminal device, the channel indication information from the access network device via the physical control channel, the method further comprises:

receiving, by the terminal device, configuration information of the N channel resource sets from the access network device by means of high layer signaling, wherein configuration information of the *N* channel resource sets corresponding to different terminal devices is different.

A second aspect provides an uplink control information receiving method, comprising:

sending, by an access network device, channel indication information to a terminal device via a physical control channel;

pre-configuring, by the access network device, *N* channel resource sets for the terminal device, so that the terminal device determines one channel resource set from the *N* channel resource sets as a first channel resource set, and determines a channel resource indicated by the channel indication information in the first channel resource set, wherein *N* is a positive integer greater than or equal to 2, and each of the *N* channel resource sets comprises at least two channel resources; and

receiving, by the access network device, uplink control information UCI sent by the terminal device on the channel resource.

With reference to the second aspect, in a first possible implementation of the second aspect, each of the N channel resource sets comprises a same quantity of channel resources.

With reference to the second aspect, in a second possible implementation of the second aspect, at least one of the *N* channel resource sets comprises at least two channel resources having

Pegasus_PriorArt_0010301

Petitioners' Exhibit 1009
Ericsson Inc., et al. v. KT Corporation, et al.
Case No. IPR2025-00083; U.S. Patent No. 10,638,463
Page 6 of 59

different formats.

With reference to the second aspect, in a third possible implementation of the second aspect, at least one of the *N* channel resource sets comprises at least two channel resources having a same format but different channel capacities.

With reference to the second aspect or any one of the first to third possible implementations of the second aspect, in fourth possible implementation of the second aspect, before sending, by the access network device, the channel indication information to the terminal device via the physical control channel, the method further comprises:

sending, by the access network device, configuration information of the *N* channel resource sets to the terminal device by means of high layer signaling, wherein configuration information of the *N* channel resource sets corresponding to different terminal devices is different.

A third aspect provides an uplink control information sending method, comprising:

receiving, by a terminal device, channel indication information from an access network device via a physical control channel;

determining, by the terminal device, a first channel resource of *N* channel resources according to the channel indication information, where *N* is a positive integer greater than or equal to 2, and the *N* channel resources are preconfigured by the access network device for the terminal device;

increasing or decreasing, by the terminal device, the first channel resource to obtain a second channel resource; and

sending, by the terminal device, uplink control information UCI to the access network device on the second channel resource.

With reference to the third aspect, in a first possible implementation of the third aspect, each of the *N* channel resources corresponds to a different channel capacity;

before increasing or decreasing, by the terminal device, the first channel resource to obtain the second channel resource, the method further comprises: determining, by the terminal device, a size of the UCI; and

increasing or decreasing, by the terminal device, the first channel resource to obtain the second channel resource comprises:

if a channel capacity corresponding to the first channel resource is greater than the size of the UCI, decreasing, by the terminal device, the first channel resource to obtain the second

Pegasus_PriorArt_0010302

Petitioners' Exhibit 1009
Ericsson Inc., et al. v. KT Corporation, et al.
Case No. IPR2025-00083; U.S. Patent No. 10,638,463
Page 7 of 59

channel resource; or

if a channel capacity corresponding to the first channel resource is less than the size of the UCI, increasing, by the terminal device, the first channel resource to obtain the second channel resource.

With reference to the first possible implementation of the third aspect, in a second possible implementation of the third aspect, decreasing, by the terminal device, the first channel resource to obtain the second channel resource comprises:

decreasing, by the terminal device, the channel capacity of the first channel resource by k basic channel units to obtain the second channel resource, so that the size R_a of the UCI meets $R_b-(k+1)R_0<R_a\leq R_b-kR_0$, where R_b indicates a channel capacity of the first channel resource, and R_0 indicates a size of the basic channel unit.

With reference to the second possible implementation of the third aspect, in a third possible implementation of the third aspect, a subcarrier whose frequency is the highest in the k basic channel units is adjacent to a subcarrier whose frequency is the lowest in the first channel resource;

or a subcarrier whose frequency is the lowest in the k basic channel units is adjacent to a subcarrier whose frequency is the highest in the first channel resource.

With reference to the first possible implementation of the third aspect, in a fourth possible implementation of the third aspect, increasing, by the terminal device, the first channel resource to obtain the second channel resource comprises:

increasing, by the terminal device, the channel capacity of the first channel resource by k basic channel units, so that the size R_a of the UCI meets $R_b+(k-1)R_0<R_a\leq R_b+kR_0$, where R_b indicates a channel capacity of the first channel resource, and R_0 indicates a size of the basic channel unit.

With reference to the fourth possible implementation of the third aspect, in a fifth possible implementation of the third aspect, a subcarrier whose frequency is the highest in the k basic channel units is adjacent to a subcarrier whose frequency is the lowest in the first channel resource;

or a subcarrier whose frequency is the lowest in the k basic channel units is adjacent to a subcarrier whose frequency is the highest in the first channel resource.

With reference to the third aspect or any one of the first to fifth possible implementations of

Pegasus_PriorArt_0010303

Petitioners' Exhibit 1009
Ericsson Inc., et al. v. KT Corporation, et al.
Case No. IPR2025-00083; U.S. Patent No. 10,638,463
Page 8 of 59

the third aspect, in a sixth possible implementation of the third aspect, the UCI comprises at least one of HARQ-ACK information of the terminal device for received downlink data or channel state information CSI generated by the terminal device.

With reference to the third aspect or any one of the first to the sixth possible implementations of the third aspect, in a seventh possible implementation of the third aspect, before receiving, by the terminal device, the channel indication information from the access network device via the physical control channel, the method further comprises:

receiving, by the terminal device, configuration information of the *N* channel resources from the access network device by means of high layer signaling, wherein configuration information of the *N* channel resource sets corresponding to different terminal devices is different.

A fourth aspect provides an uplink control information receiving method, comprising:

sending, by an access network device, channel indication information to a terminal device via a physical control channel, so that the terminal device determines a first channel resource from *N* channel resources according to the channel indication information, and increases or decreases the first channel resource to obtain a second channel resource, wherein *N* is a positive integer greater than or equal to 2, and the *N* channel resources are pre-configured by the access network device for the terminal device; and

receiving, by the access network device, uplink control information UCI sent by the terminal device on the second channel resource.

With reference to the fourth aspect, in a first possible implementation of the fourth aspect, the UCI comprises at least one of HARQ-ACK information of the terminal device for received downlink data or channel state information CSI generated by the terminal device.

With reference to the fourth aspect or the first possible implementation of the fourth aspect, in a second possible implementation of the fourth aspect, before sending, by the access network device, the channel indication information to the terminal device via the physical control channel, the method further comprises:

sending, by the access network device, configuration information of the *N* channel resources to the terminal device by means of high layer signaling, wherein configuration information of the *N* channel resource sets corresponding to different terminal devices is different.

A fifth aspect provides a terminal device, comprising:

a first receiving unit configured to receive channel indication information from an access

Pegasus_PriorArt_0010304

Petitioners' Exhibit 1009
Ericsson Inc., et al. v. KT Corporation, et al.
Case No. IPR2025-00083; U.S. Patent No. 10,638,463
Page 9 of 59

network device via a physical control channel;

a first processing unit configured to: determine one channel resource set from *N* channel resource sets as a first channel resource set, wherein *N* is a positive integer greater than or equal to 2, the *N* channel resource sets are pre-configured by the access network device for the terminal device, and each of the *N* channel resource sets comprises at least two channel resources; and determine a channel resource indicated by the channel indication information in the first channel resource set; and

a first sending unit configured to send uplink control information UCI to the access network device on the channel resource.

With reference to the fifth aspect, in a first possible implementation of the fifth aspect, the first processing unit is further configured to determine a type of the UCI; and

the first processing unit is specifically configured to determine the one channel resource set matching the type of the UCI from the *N* channel resource sets as the first channel resource set.

With reference to the first possible implementation of the fifth aspect, in a second possible implementation of the fifth aspect, the type of the UCI comprises a first type and a second type, and N=2,

wherein the first type of UCI comprises channel state information CSI and hybrid automatic repeat request-acknowledgment HARQ-ACK information, and a channel resource comprised in one of the N channel resource sets is used to send the first type of UCI; and

the second type of UCI comprises HARQ-ACK information but not CSI, and a channel resource comprised in another of the *N* channel resource sets is used to send the second type of UCI.

With reference to the fifth aspect, in a third possible implementation of the fifth aspect, the first processing unit is further configured to determine a size of the UCI; and

the first processing unit is specifically configured to determine the one channel resource set matching the size K of the UCI from the *N* channel resource sets as the first channel resource set.

With reference to the third possible implementation of the fifth aspect, in a fourth possible implementation of the fifth aspect, the first processing unit is specifically configured to: determine a capacity range corresponding to each of the *N* channel resource sets; and determine the one channel resource set from the N channel resource sets as the first channel resource set, so that the size K of the UCI meets $R_{min} \leq K \leq R_{max}$, wherein a capacity range of the

Pegasus_PriorArt_0010305

Petitioners' Exhibit 1009
Ericsson Inc., et al. v. KT Corporation, et al.
Case No. IPR2025-00083; U.S. Patent No. 10,638,463
Page 10 of 59

one channel resource set is [R_{min}, R_{max}], R_{min} is a minimum value of a capacity of the one channel resource set, and R_{max} is a maximum value of the capacity of the one channel resource set.

With reference to the fifth aspect or any one of the first to fourth possible implementations of the fifth aspect, in a fifth possible implementation of the fifth aspect, each of the *N* channel resource sets comprises a same quantity of channel resources.

With reference to the fifth aspect or any one of the first to fifth possible implementations of the fifth aspect, in a sixth possible implementation of the fifth aspect, at least one of the *N* channel resource sets comprises at least two channel resources having different formats.

With reference to the fifth aspect or any one of the first to fifth possible implementations of the fifth aspect, in a seventh possible implementation of the fifth aspect, at least one of the *N* channel resource sets comprises at least two channel resources having a same format but different channel capacities.

With reference to the fifth aspect or any one of the first to seventh possible implementations of the fifth aspect, in an eighth possible implementation of the fifth aspect, the first receiving unit is further configured to receive configuration information of the *N* channel resource sets from the access network device by means of high layer signaling, where configuration information of the N channel resource sets corresponding to different terminal devices is different.

A sixth aspect provides an access network device, comprising:

a second sending unit configured to send channel indication information to a terminal device via a physical control channel;

a second processing unit configured to pre-configure *N* channel resource sets for the terminal device, so that the terminal device determines one channel resource set from the *N* channel resource sets as a first channel resource set, and determines a channel resource indicated by the channel indication information in the first channel resource set, wherein *N* is a positive integer greater than or equal to 2, and each of the *N* channel resource sets comprises at least two channel resources; and

a second receiving unit configured to receive uplink control information UCI sent by the terminal device on the channel resource.

With reference to the sixth aspect, in a first possible implementation of the sixth aspect, each of the *N* channel resource sets comprises a same quantity of channel resources.

Pegasus_PriorArt_0010306

Petitioners' Exhibit 1009
Ericsson Inc., et al. v. KT Corporation, et al.
Case No. IPR2025-00083; U.S. Patent No. 10,638,463
Page 11 of 59

With reference to the sixth aspect, in a second possible implementation of the sixth aspect, at least one of the *N* channel resource sets comprises at least two channel resources having different formats.

With reference to the sixth aspect, in a third possible implementation of the sixth aspect, at least one of the *N* channel resource sets comprises at least two channel resources having a same format but different channel capacities.

With reference to the sixth aspect or any one of the first to third possible implementations of the sixth aspect, in a fourth possible implementation of the sixth aspect, the second sending unit is further configured to send configuration information of the *N* channel resource sets to the terminal device by means of high layer signaling, where configuration information of the *N* channel resource sets corresponding to different terminal devices is different.

A seventh aspect provides a terminal device, comprising:

a third receiving unit configured to receive channel indication information from an access network device via a physical control channel;

a third processing unit configured to: determine a first channel resource of *N* channel resources according to the channel indication information, wherein *N* is a positive integer greater than or equal to 2, and the *N* channel resources are pre-configured by the access network device for the terminal device; and increase or decrease the first channel resource to obtain a second channel resource; and

a third sending unit configured to send uplink control information UCI to the access network device on the second channel resource.

With reference to the seventh aspect, in a first possible implementation of the seventh aspect, each of the *N* channel resources corresponds to a different channel capacity;

the third processing unit is further configured to determine a size of the UCI; and

the third processing unit is specifically configured to: if a channel capacity corresponding to the first channel resource is greater than the size of the UCI, decrease the first channel resource to obtain the second channel resource; or if a channel capacity corresponding to the first channel resource is less than the size of the UCI, increase the first channel resource to obtain the second channel resource.

With reference to the first possible implementation of the seventh aspect, in a second possible implementation of the seventh aspect, the third processing unit is specifically configured

Pegasus_PriorArt_0010307

Petitioners' Exhibit 1009
Ericsson Inc., et al. v. KT Corporation, et al.
Case No. IPR2025-00083; U.S. Patent No. 10,638,463
Page 12 of 59

to decrease the channel capacity of the first channel resource by k basic channel units to obtain the second channel resource, so that the size R_a of the UCI meets $R_b-(k+1)R_0<R_a\leq R_b-kR_0$, where R_b indicates a channel capacity of the first channel resource, and R_0 indicates a size of the basic channel unit.

With reference to the second possible implementation of the seventh aspect, in a third possible implementation of the seventh aspect, a subcarrier whose frequency is the highest in the k basic channel units is adjacent to a subcarrier whose frequency is the lowest in the first channel resource;

or a subcarrier whose frequency is the lowest in the k basic channel units is adjacent to a subcarrier whose frequency is the highest in the first channel resource.

With reference to the first possible implementation of the seventh aspect, in a fourth possible implementation of the seventh aspect, the third processing unit is specifically configured to increase the channel capacity of the first channel resource by k basic channel units, so that the size R_a of the UCI meets $R_b+(k-1)R_0<R_a\leq R_b+kR_0$, where R_b indicates a channel capacity of the first channel resource, and R_0 indicates a size of the basic channel unit.

With reference to the fourth possible implementation of the seventh aspect, in a fifth possible implementation of the seventh aspect, a subcarrier whose frequency is the highest in the k basic channel units is adjacent to a subcarrier whose frequency is the lowest in the first channel resource;

or a subcarrier whose frequency is the lowest in the k basic channel units is adjacent to a subcarrier whose frequency is the highest in the first channel resource.

With reference to the seventh aspect or any one of the first to fifth possible implementations of the seventh aspect, in a sixth possible implementation of the seventh aspect, the UCI comprises at least one of HARQ-ACK information of the terminal device for received downlink data or channel state information CSI generated by the terminal device.

With reference to the seventh aspect or any one of the first to sixth possible implementations of the seventh aspect, in a seventh possible implementation of the seventh aspect, the first receiving unit is further configured to receive configuration information of the N channel resources from the access network device by means of high layer signaling, where configuration information of the N channel resource sets corresponding to different terminal devices is different.

Pegasus_PriorArt_0010308

Petitioners' Exhibit 1009
Ericsson Inc., et al. v. KT Corporation, et al.
Case No. IPR2025-00083; U.S. Patent No. 10,638,463
Page 13 of 59

An eighth aspect provides an access network device, comprising:

a fourth sending unit configured to send channel indication information to a terminal device via a physical control channel, so that the terminal device determines a first channel resource from *N* channel resources according to the channel indication information, and increases or decreases the first channel resource to obtain a second channel resource, wherein *N* is a positive integer greater than or equal to 2, and the *N* channel resources are pre-configured by the access network device for the terminal device; and

a fourth receiving unit configured to receive uplink control information UCI sent by the terminal device on the second channel resource.

With reference to the eighth aspect, in a first possible implementation of the eighth aspect, the UCI comprises at least one of HARQ-ACK information of the terminal device for received downlink data or channel state information CSI generated by the terminal device.

With reference to the eighth aspect or the first possible implementation of the eighth aspect, in a second possible implementation of the eighth aspect, the fourth sending unit is further configured to send configuration information of the *N* channel resources to the terminal device by means of high layer signaling, where configuration information of the *N* channel resource sets corresponding to different terminal devices is different.

A ninth aspect provides an uplink control information sending and receiving system, comprising the terminal device according to the fifth aspect or any one of the first to eighth possible implementations of the fifth aspect, and the access network device according to the sixth aspect or any one of the first to fourth possible implementations of the sixth aspect.

A tenth aspect provides an uplink control information sending and receiving system, comprising the terminal device according to the seventh aspect or any one of the first to seventh possible implementations of the seventh aspect, and the access network device according to the eighth aspect or any one of the first or second possible implementation of the eighth aspect.

In the method and apparatus for sending and receiving uplink control information provided in the embodiments of the present invention, the access network device sends the configuration information comprising at least two channel resource sets to the terminal device, where each channel resource set comprises at least two channel resources. This is equivalent to that all channel resources allocated by the access network device to the terminal device are grouped, and each group is equivalent to one channel resource set. The terminal device first determines the first

Pegasus_PriorArt_0010309

Petitioners' Exhibit 1009
Ericsson Inc., et al. v. KT Corporation, et al.
Case No. IPR2025-00083; U.S. Patent No. 10,638,463
Page 14 of 59

channel resource set from the plurality of channel resource sets, and then determines the channel resource from the first channel resource set according to the channel indication information. Different channel resources may be determined at different times in a subframe according to the same channel indication information, whereas in the prior art, only one channel resource can be determined at different times in a subframe according to the same channel indication information. As a quantity of channel resources increases continuously, a quantity of bits that need to be added to the channel indication information in the embodiments of the present invention is less than that in the prior art, reducing consumption of downlink channel resources by the channel indication information in a downward sending process.

Brief Description of the Drawings

To more clearly illustrate the technical solutions in the embodiments of the present invention or the prior art, the accompanying drawings needed to be used in the description of the embodiments or the prior art will be briefly described below. Obviously, the accompanying drawings in the following description are only some embodiments of the present invention, and other accompanying drawings can be obtained by those of ordinary skill in the art from these accompanying drawings without involving any inventive effort.

FIG. 1 is a flowchart of an uplink control information sending method provided in an embodiment of the present invention;

FIG. 2 is a schematic diagram of a channel resource provided in an embodiment of the present invention;

FIG. 3 is a schematic diagram of a channel resource provided in another embodiment of the present invention;

FIG. 4 is a flowchart of an uplink control information receiving method provided in another embodiment of the present invention;

FIG. 5 is a flowchart of an uplink control information sending method provided in another embodiment of the present invention;

FIG. 6 is a schematic diagram of a channel resource provided in another embodiment of the present invention;

FIG. 7 is a schematic diagram of a channel resource provided in another embodiment of the present invention;

Pegasus_PriorArt_0010310

Petitioners' Exhibit 1009
Ericsson Inc., et al. v. KT Corporation, et al.
Case No. IPR2025-00083; U.S. Patent No. 10,638,463
Page 15 of 59

FIG. 8 is a schematic diagram of a channel resource provided in another embodiment of the present invention;

FIG. 9 is a schematic diagram of a channel resource provided in another embodiment of the present invention;

FIG. 10 is a flowchart of an uplink control information receiving method provided in another embodiment of the present invention;

FIG. 11 is a structural diagram of a terminal device provided in an embodiment of the present invention;

FIG. 12 is a structural diagram of an access network device provided in an embodiment of the present invention;

FIG. 13 is a structural diagram of a terminal device provided in another embodiment of the present invention;

FIG. 14 is a structural diagram of an access network device provided in another embodiment of the present invention;

FIG. 15 is a structural diagram of an uplink control information sending and receiving system provided in an embodiment of the present invention;

FIG. 16 is a structural diagram of an uplink control information sending and receiving system provided in another embodiment of the present invention; and

FIG. 17 is a schematic diagram of a format of a channel resource provided in an embodiment of the present invention.

Detailed Description of the Preferred Embodiments

To make the objects, technical solutions, and advantages of the embodiments of the present invention clearer, the technical solutions in the embodiments of the present invention will be clearly and completely described below with reference to the drawings in the embodiments of the present invention. Apparently, the described embodiments are some but not all of the embodiments of the present invention. All other embodiments obtained by those of ordinary skill in the art based on the embodiments of the present invention without inventive effort shall fall within the protection scope of the present invention.

FIG. 1 is a flowchart of an uplink control information sending method provided in an embodiment of the present invention. In the embodiment of the present invention, the uplink

Pegasus_PriorArt_0010311

Petitioners' Exhibit 1009
Ericsson Inc., et al. v. KT Corporation, et al.
Case No. IPR2025-00083; U.S. Patent No. 10,638,463
Page 16 of 59

control information sending method is provided for a case in which as a quantity of uplink channels increases continuously, a quantity of bits of channel indication information sent downward by an access network device increases continuously, leading to relatively large consumption of downlink channel resources. Specific steps of the method are as follows.

Step S101: A terminal device receives channel indication information from an access network device via a physical control channel.

The embodiment of the present invention relates to an access network device and a terminal device in an LTE system. The access network device is specifically a base station, and the access network device sends downlink data to a same terminal device by using at least one of a plurality of carriers. For downlink data on each carrier, the terminal device separately performs acknowledgment and generates HARQ-ACK information. In addition, the access network device sends a reference signal to the terminal device by using each carrier. The terminal device obtains channel state information CSI corresponding to each carrier by detecting the reference signal on each carrier. The access network device feeds back uplink control information UCI to the access network device via an uplink channel. The UCI includes at least one of the HARQ-ACK information or the channel state information CSI.

Before the access network device feeds back the uplink control information UCI to the access network device via the uplink channel, the terminal device receives, via the physical control channel, the channel indication information sent by the access network device. The physical control channel is specifically a physical downlink control channel (PDCCH) and an enhanced physical downlink control channel (EPDCCH). Information borne on the physical control channel is dynamically configured information. That is, the channel indication information is borne on the physical control channel as dynamically configured information, and is sent by the access network device to the terminal device.

Step S102: The terminal device determines one channel resource set from N channel resource sets as a first channel resource set, wherein N is a positive integer greater than or equal to 2, the N channel resource sets are pre-configured by the access network device for the terminal device, and each of the N channel resource sets includes at least two channel resources.

In the embodiment of the present invention, step S101 may be performed first and then step S102 may be performed, or step S102 may be performed first and then step S101 may be performed. The access network device pre-configures the N channel resource sets for the terminal

Pegasus_PriorArt_0010312

Petitioners' Exhibit 1009
Ericsson Inc., et al. v. KT Corporation, et al.
Case No. IPR2025-00083; U.S. Patent No. 10,638,463
Page 17 of 59

device, wherein *N* is a positive integer greater than or equal to 2, and each of the *N* channel resource sets includes at least two channel resources. The terminal device determines one channel resource set from the *N* channel resource sets as the first channel resource set. Specifically, determining the one channel resource set from the *N* channel resource sets as the first channel resource set may be according to a type or size of the UCI fed back by the terminal device to the access network device. The type of the UCI may be specifically distinguished by using specific content included in the UCI, and the size of the UCI may be specifically measured by using a quantity of bits of the UCI or a quantity of UCI.

Step S103: The terminal device determines a channel resource indicated by the channel indication information in the first channel resource set.

After the first channel resource set is determined in step S102, the terminal device determines a channel resource indicated by the channel indication information in the first channel resource set. Specifically, the channel resource indicated by the channel indication information is a channel resource in the first channel resource set. For example, the first channel resource set includes four channel resources: a channel resource a, a channel resource b, a channel resource c, and a channel resource d. It is predefined that channel indication information 00 indicates the channel resource a, channel indication information 01 indicates the channel resource b, channel indication information 10 indicates the channel resource c, and channel indication information 11 indicates the channel resource d. According to an indication of the channel indication information, the channel resource may be determined from the first channel resource set.

Step S104: The terminal device sends uplink control information UCI to the access network device on the channel resource.

The terminal device sends the uplink control information UCI to the access network device on the channel resource determined in step S103. That is, the channel resource is used as an uplink channel to bear the uplink control information UCI, and is used to send the UCI to the access network device.

In the embodiment of the present invention, the access network device sends configuration information including the at least two channel resource sets to the terminal device, wherein each channel resource set includes at least two channel resources. This is equivalent to that all channel resources allocated by the access network device to the terminal device are grouped, and each group is equivalent to one channel resource set. The terminal device first determines the first

Pegasus_PriorArt_0010313

Petitioners' Exhibit 1009
Ericsson Inc., et al. v. KT Corporation, et al.
Case No. IPR2025-00083; U.S. Patent No. 10,638,463
Page 18 of 59

channel resource set of the plurality of channel resource sets, and then determines the channel resource from the first channel resource set according to the channel indication information. Different channel resources may be determined at different times in a subframe according to the same channel indication information, whereas in the prior art, only one channel resource can be determined at different times in a subframe according to the same channel indication information. As a quantity of channel resources increases continuously, a quantity of bits that need to be added to the channel indication information in the embodiment of the present invention is less than that in the prior art, reducing consumption of downlink channel resources by the channel indication information in a downward transmission process.

FIG. 2 is a schematic diagram of a channel resource provided in an embodiment of the present invention. On the basis of the above embodiment, before the terminal device determines the one channel resource set from *N* channel resource sets as the first channel resource set, the method further includes: determining, by the terminal device, a type of the UCI. determining, by the terminal device, the one channel resource set from the *N* channel resource sets as the first channel resource set includes: determining, by the terminal device, the one channel resource set matching the type of the UCI from the *N* channel resource sets as the first channel resource set.

The type of the UCI includes a first type and a second type, and *N*=2. The first type of UCI includes channel state information CSI and hybrid automatic repeat request-acknowledgment HARQ-ACK information, and a channel resource included in one of the *N* channel resource sets is used to send the first type of UCI. The second type of UCI includes HARQ-ACK information but not CSI, and a channel resource included in another of the N channel resource sets is used to send the second type of UCI.

The terminal device determines the type of the UCI. For each downlink carrier for the terminal device, there is corresponding configuration information for sending periodic CSI. Specifically, the configuration information includes a sending period of the periodic CSI and a subframe offset value for sending the periodic CSI in the period. The UE may determine, by using a sending period of periodic CSI on each downlink carrier and a subframe offset value for sending the periodic CSI that are configured by the base station, whether the periodic CSI needs to be sent on at least one carrier in a current uplink subframe, thereby determining whether a type of UCI that needs to be fed back in the current uplink subframe is the first type of UCI or the second type of UCI.

Pegasus_PriorArt_0010314

Petitioners' Exhibit 1009
Ericsson Inc., et al. v. KT Corporation, et al.
Case No. IPR2025-00083; U.S. Patent No. 10,638,463
Page 19 of 59

In the embodiment of the present invention, the first type of UCI includes the channel state information CSI and the hybrid automatic repeat request-acknowledgment HARQ-ACK information, the second type of UCI includes HARQ-ACK information but not CSI, and N=2. Determining the one channel resource set from the N channel resource sets as the first channel resource set may be specifically performed according to a correspondence between a type of a channel resource set and a type of UCI. Specifically, the correspondence is implemented in two manners. In a first manner, when pre-configuring the N channel resource sets for the terminal device, the access network device predefines a type that is of UCI and that matches each channel resource set. For example, whether a channel resource in each channel resource set is used to send the first type of UCI or the second type of UCI. In a second manner, when pre-configuring the N channel resource sets for the terminal device, the access network device sends control signaling to the terminal device, to indicate a type of UCI matching each channel resource set. For example, whether a channel resource in each channel resource set is used to send the first type of UCI or the second type of UCI.

As shown in FIG. 2, the configuration information in the above embodiment includes two channel resource sets: a channel resource set A and a channel resource set B. Each channel resource set matches a specific different type of UCI. In the embodiment of the present invention, it is assumed that the channel resource set A matches the first type of UCI, and the channel resource set B matches the second type of UCI. That is, each of channel resources such as a channel resource 1-1, a channel resource 1-2, a channel resource 1-3, and a channel resource 1-4 in the channel resource set A can bear the channel state information CSI and the hybrid automatic repeat request-acknowledgment HARQ-ACK information. Each of channel resources such as a channel resource 2-1, a channel resource 2-2, a channel resource 2-3, and a channel resource 2-4 in the channel resource set B can be used to bear the hybrid automatic repeat request-acknowledgment HARQ-ACK information but cannot be used to bear the CSI.

The terminal device determines, according to the type of the UCI, the one channel resource set matching the type of the UCI as the first channel resource set. A specific determining process is as follows: if the UCI includes the CSI, the terminal device determines the channel resource set A matching the type of the UCI as the first channel resource set; or if the UCI does not include the CSI, the terminal device determines the channel resource set B as the first channel resource set.

Pegasus_PriorArt_0010315

Petitioners' Exhibit 1009
Ericsson Inc., et al. v. KT Corporation, et al.
Case No. IPR2025-00083; U.S. Patent No. 10,638,463
Page 20 of 59

In addition, when the first channel resource set is predefined as the channel resource set A, the channel indication information 00 indicates the channel resource 1-1, the channel indication information 01 indicates the channel resource 1-2, the channel indication information 10 indicates the channel resource 1-3, and the channel indication information 11 indicates the channel resource 1-4. When the first channel resource set is predefined as the channel resource set B, the channel indication information 00 indicates the channel resource 2-1, the channel indication information 01 indicates the channel resource 2-2, the channel indication information 10 indicates the channel resource 2-3, and the channel indication information 11 indicates the channel resource 2-4.

If the determined first channel resource set is the channel resource set A, and a channel resource identifier carried in the channel indication information is a binary number 01, a channel resource determined by the terminal device in the channel resource set A according to the channel indication information is the channel resource 1-2. If the determined first channel resource set is the channel resource set B, a channel resource determined by the terminal device in the channel resource set B according to the same channel indication information is the channel resource 2-2. That is, same channel indication information may be used to indicate different target channel resources at different times in a subframe.

The embodiment of the present invention specifically provides the method for determining, by the terminal device, according to the type of the UCI, the one channel resource set matching the type of the UCI from the two channel resource sets as the first channel resource set.

FIG. 3 is a schematic diagram of a channel resource provided in another embodiment of the present invention. Before the terminal device determines the one channel resource set from *N* channel resource sets as the first channel resource set, the method further includes: determining, by the terminal device, a size of the UCI. Determining, by the terminal device, the one channel resource set from the *N* channel resource sets as the first channel resource set includes: determining, by the terminal device, the one channel resource set matching the size K of the UCI from the *N* channel resource sets as the first channel resource set.

The terminal device determines the size of the UCI. For each downlink carrier for the terminal device, there is corresponding configuration information for sending periodic CSI. Specifically, the configuration information includes a sending period of the periodic CSI, a subframe offset value for sending the periodic CSI in the period, a reporting mode of the periodic

Pegasus_PriorArt_0010316

Petitioners' Exhibit 1009
Ericsson Inc., et al. v. KT Corporation, et al.
Case No. IPR2025-00083; U.S. Patent No. 10,638,463
Page 21 of 59

CSI, and the like. The UE may determine, by using configuration information that is for periodic CSI on each downlink carrier and that is configured by the base station, a quantity of bits for reporting the periodic CSI on each carrier in a current uplink subframe and reported content, thereby determining a size K of UCI that needs to be fed back in the current uplink subframe.

Determining, by the terminal device, the one channel resource set matching the size K of the UCI from the *N* channel resource sets as the first channel resource set includes: determining, by the terminal device, a capacity range corresponding to each of the *N* channel resource sets; and determining, by the terminal device, the one channel resource set from the *N* channel resource sets as the first channel resource set, so that the size K of the UCI meets $R_{min} \leq K \leq R_{max}$, wherein a capacity range of the channel resource set is $[R_{min}, R_{max}]$, R_{min} is a minimum value of a capacity of the channel resource set, and R_{max} is a maximum value of the capacity of the channel resource set.

As shown in FIG. 3, the access network device pre-configures four channel resource sets for the terminal device: a channel resource set A, a channel resource set B, a channel resource set C, and a channel resource set D. The access network device sends the configuration information to the terminal device. The configuration information includes a capacity range corresponding to each of the four channel resource sets, and each channel resource set corresponds to a different capacity range. The capacity range corresponding to each channel resource set refers to a quantity of bits of UCI that can be sent on channel resources of each channel resource set. For example, a capacity range corresponding to the channel resource set A is $[R_{1,min}, R_{1,max}]$, where $R_{1,min}$ is a minimum value of a capacity of the channel resource set A, and $R_{1,max}$ is a maximum value of the capacity of the channel resource set A. Similarly, a capacity range corresponding to the channel resource set B is $[R_{2,min}, R_{2,max}]$, a capacity range corresponding to the channel resource set C is $[R_{3,min}, R_{3,max}]$, and a capacity range corresponding to the channel resource set D is $[R_{4,min}, R_{4,max}]$. The size of the UCI may be measured by using the quantity of bits of the UCI or the amount of the UCI. Specifically, each of the above four capacity ranges represents a range of the quantity of bits. If the quantity K of bits of the UCI meets $R_{2,min} \leq K \leq R_{2,max}$, that is, the quantity of bits of the UCI is in a range of $[R_{2,min}, R_{2,max}]$, the terminal device determines that the first channel resource set is the channel resource set B.

Alternatively, the access network device sends the configuration information to the terminal device. The configuration information includes capacity information corresponding to each of the

Pegasus_PriorArt_0010317

Petitioners' Exhibit 1009
Ericsson Inc., et al. v. KT Corporation, et al.
Case No. IPR2025-00083; U.S. Patent No. 10,638,463
Page 22 of 59

four channel resource sets, and each channel resource set corresponds to different capacity information. For example, as a first channel resource set, the channel resource set A is corresponding to capacity information R_1, and a channel capacity corresponding to each channel resource in the channel resource set A is R_1; as a second channel resource set, the channel resource set B is corresponding to capacity information R_2, and a channel capacity corresponding to each channel resource in the channel resource set B is R_2; as a third channel resource set, the channel resource set C is corresponding to capacity information R_3, and a channel capacity corresponding to each channel resource in the channel resource set C is R_3; as a fourth channel resource set, the channel resource set D is corresponding to capacity information R_4, and a channel capacity corresponding to each channel resource in the channel resource set D is R_4; $R_1<R_2<R_3<R_4$. If the quantity R_a of bits of the UCI meets $R_{i-1}<R_a\leq R_i$, where $1\leq i\leq 4$, the terminal device determines that the first channel resource set is an *i*-th channel resource set. Specifically, for example, if the quantity Ra of bits of the UCI meets $R_1<R_a\leq R_2$, the terminal device determines that the first channel resource set is the second channel resource set, that is, the channel resource set B.

In addition, when the first channel resource set is the channel resource set A, the channel indication information 00 indicates the channel resource 1-1, the channel indication information 01 indicates the channel resource 1-2, the channel indication information 10 indicates the channel resource 1-3, and the channel indication information 11 indicates the channel resource 1-4. When the first channel resource set is the channel resource set B, the channel indication information 00 indicates the channel resource 2-1, the channel indication information 01 indicates the channel resource 2-2, the channel indication information 10 indicates the channel resource 2-3, and the channel indication information 11 indicates the channel resource 2-4. When the first channel resource set is the channel resource set C, the channel indication information 00 indicates a channel resource 3-1, the channel indication information 01 indicates a channel resource 3-2, the channel indication information 10 indicates a channel resource 3-3, and the channel indication information 11 indicates a channel resource 3-4. When the first channel resource set is the channel resource set D, the channel indication information 00 indicates a channel resource 4-1, the channel indication information 01 indicates a channel resource 4-2, the channel indication information 10 indicates a channel resource 4-3, and the channel indication information 11 indicates a channel resource 4-4.

Pegasus_PriorArt_0010318

Petitioners' Exhibit 1009
Ericsson Inc., et al. v. KT Corporation, et al.
Case No. IPR2025-00083; U.S. Patent No. 10,638,463
Page 23 of 59

If the first channel resource set is the channel resource set B, and a channel resource identifier carried in the channel indication information is a binary number 01, a channel resource determined by the terminal device in the channel resource set B according to the channel indication information is the channel resource 2-2. If the first channel resource set is the channel resource set D, a channel resource determined by the terminal device in the channel resource set D according to the same channel indication information is the channel resource 4-2. That is, the same channel indication information may be used to indicate different channel resources at different times in a subframe.

In the embodiment of the present invention, each of the N channel resource sets includes a same quantity of channel resources. As shown in FIGS. 2 and 3, all the channel resource sets include a same quantity of channel resources. In addition, all the channel resource sets may also include different quantities of channel resources.

At least one of the N channel resource sets includes at least two channel resources having different formats. A channel resource set includes channel resources having at least two different formats. For example, the four channel resources in the channel resource set A may have two formats, three formats, or four formats. FIG. 17 is a schematic diagram of a format of a channel resource provided in an embodiment of the present invention. The format of the channel resource may include, but is not limited to, the following formats.

First: physical uplink control channel format 3. A symbol obtained after an original bit is channel-coded and a symbol obtained after the original bit is modulated are separately placed in two timeslots of one subframe. In this way, there are 12 modulated symbols in each timeslot, and the 12 modulated symbols are placed on 12 consecutive subcarriers on one time-domain symbol in one timeslot, that is, occupy 12 subcarriers on one time-domain symbol of one resource block (RB). Then, for each timeslot, spreading is performed by using an orthogonal cover code (OCC) sequence w having a length of 5 in a time domain. One timeslot occupies five time-domain symbols in one RB. Different UEs may perform code division multiplexing on one RB by using different OCCs. Two remaining symbols are used to bear a reference signal (RS). After that, discrete Fourier transform (DFT) precoding and inverse fast Fourier transform (IFFT) are performed on the spread bit. In the case of a normal CP, a sending structural diagram of PUCCH format 3 is shown in FIG. 17. In one resource block, the reference signal is specifically a pilot portion, and a portion other than the reference signal is a data portion.

Pegasus_PriorArt_0010319

Petitioners' Exhibit 1009
Ericsson Inc., et al. v. KT Corporation, et al.
Case No. IPR2025-00083; U.S. Patent No. 10,638,463
Page 24 of 59

Second: a first format based on PUCCH format 3. The channel resource in PUCCH format 3 is extended to occupy N (N>1) RBs. With two RBs as an example, 12 subcarriers in each timeslot are extended to 24 subcarriers in each timeslot. An original bit is channel-coded and scrambled separately, and then obtained bits are modulated. Obtained results are separately placed on each subcarrier of two RBs in one subframe. Then, for each timeslot, spreading is performed by using an orthogonal cover code (OCC) sequence w having a length of 5 in a time domain. One timeslot occupies five time-domain symbols. Two remaining symbols are used to bear a reference signal (RS). A mapping location of a demodulation reference signal is the same as that in PUCCH format 3. Then, on each symbol, DFT precoding in a length of 24 and inverse fast Fourier transform (IFFT) are performed on all spread data in the two RBs. A solution of performing extension in 3 RBs or more RBs is similar, provided that extension is performed in a frequency domain. In addition to RM encoding, original bit information in this format may also be encoded by using a convolutional code, for example, a tail biting convolutional code (TBCC).

Third: a second format based on PUCCH format 3. The channel resource occupies N (N>1) RBs, and a format of each RB is the same as that in PUCCH format 3. With two RBs as an example, 12 subcarriers in each timeslot are extended to 24 subcarriers in each timeslot. An original bit is channel-coded and scrambled separately, and then obtained bits are modulated. Obtained results are separately placed on each subcarrier of two RBs in one subframe. Then, for each timeslot, spreading is performed by using an orthogonal cover code (OCC) sequence w having a length of 5 in a time domain. One timeslot occupies five time-domain symbols. Two remaining symbols are used to bear a reference signal (RS). A mapping location of a demodulation reference signal is the same as that in PUCCH format 3. Then, on each symbol, DFT precoding in a length of 12 is separately performed on spread data in each of the two RBs. A result of each DFT precoding is mapped to inverse fast Fourier transform IFFT on a carrier in a frequency domain, to complete the IFFT transform. A solution of performing extension in 3 RBs or more RBs is similar, provided that extension is performed in a frequency domain. In addition to RM encoding, original bit information in this format may also be encoded by using a convolutional code, for example, a tail biting convolutional code (TBCC).

Fourth: a third format based on PUCCH format 3. The channel resource occupies N (N≥1) RBs. In a possible manner, a DFT-S-OFDM transmission mode is used in the channel resource. An original bit is channel coded and modulated, and obtained results are separately placed on K

Pegasus_PriorArt_0010320

Petitioners' Exhibit 1009
Ericsson Inc., et al. v. KT Corporation, et al.
Case No. IPR2025-00083; U.S. Patent No. 10,638,463
Page 25 of 59

symbols in one subframe. For each of the K symbols, in a time domain, spreading is performed by using an orthogonal cover code OCC having a length of M (M<5). Each to-be-sent modulated symbol occupies M time-domain symbols, and each timeslot includes two symbols used to bear a reference signal (RS). Then, a mapping location of a demodulation reference signal is the same as that in PUCCH format 3. DFT precoding and inverse fast Fourier transform (IFFT) are performed on the spread bit. In another possible manner, a DFT-S-OFDM transmission mode is used in each of the N RBs. An original bit is channel coded and modulated, and obtained results are separately placed on K symbols in one subframe. For each of the K symbols, in a time domain, spreading is performed by using an orthogonal cover code OCC having a length of M (M<5). Each to-be-sent modulated symbol occupies M time-domain symbols, and each timeslot includes two symbols used to bear a reference signal (RS). A mapping location of a demodulation reference signal is the same as that in PUCCH format 3. In addition to RM encoding, original bit information in this format may also be encoded by using a convolutional code, for example, a tail biting convolutional code (TBCC).

Fourth: a fourth format based on PUCCH format 3. The channel resource occupies N (N≥1) RBs. In a possible manner, a DFT-S-OFDM transmission mode is used in the channel resource. An original bit is channel-coded and modulated, and obtained results are separately placed in two timeslots of one subframe. P (P≥2) coded and modulated symbols may be placed on each symbol. In a time domain, P different orthogonal cover codes OCCs each having a length of 5 are separately used to perform spreading on the P coded and modulated symbols on each symbol, and the P spread signals are superimposed. Each modulated symbol to be sent occupies 5 time-domain symbols, and each timeslot includes two symbols used to bear a reference signal (RS). A mapping location of a demodulation reference signal is the same as that in PUCCH format 3. Then, DFT precoding and inverse fast Fourier transform (IFFT) are performed on the spread bit. In another possible manner, a DFT-S-OFDM transmission mode is used in each of the N RBs. An original bit is channel-coded and modulated, and obtained results are separately placed in two timeslots of one subframe. P (P≥2) coded and modulated symbols may be placed on each symbol. In a time domain, P different orthogonal cover codes OCCs each having a length of 5 are separately used to perform spreading on the P coded and modulated symbols on each symbol, and the P spread signals are superimposed. Each modulated symbol to be sent occupies 5 time-domain symbols, and each timeslot includes two symbols used to bear a reference signal (RS). A

Pegasus_PriorArt_0010321

Petitioners' Exhibit 1009
Ericsson Inc., et al. v. KT Corporation, et al.
Case No. IPR2025-00083; U.S. Patent No. 10,638,463
Page 26 of 59

mapping location of a demodulation reference signal is the same as that in PUCCH format 3. In addition to RM encoding, original bit information in this format may also be encoded by using a convolutional code, for example, a tail biting convolutional code (TBCC).

Fifth: a PUSCH-based format. The channel resource occupies N ($N \geq 1$) RBs. For each PRB, in the case of a normal CP, an intermediate symbol in each PRB is a demodulation reference signal. In the case of an extended CP, a third symbol in each PRB is a demodulation reference signal. After original information to be fed back is channel-coded and modulated, the information is mapped to a location other than that of a demodulation reference signal in a first PUCCH channel resource, and then DFT precoding and inverse fast Fourier transform (IFFT) are performed on the information. Original bit information in this format may be encoded by using a convolutional code, for example, a tail biting convolutional code (TBCC). In the case of the normal CP, a sending structural diagram of the PUSCH-based format is shown in FIG. 17. In one resource block, the reference signal is specifically a pilot portion, and a portion other than the reference signal is a data portion.

At least one of the N channel resource sets includes at least two channel resources having a same format but different channel capacities. For example, the channel resource 1-1 and the channel resource 1-2 in the channel resource set A have the same format but different channel capacities.

The UCI further includes scheduling request information SR.

Before the terminal device receives the channel indication information from the access network device via the physical control channel, the method further includes: receiving, by the terminal device, configuration information of the N channel resource sets from the access network device by means of high layer signaling, wherein configuration information of the N channel resource sets corresponding to different terminal devices is different.

Before the terminal device receives the channel indication information from the access network device via the physical control channel, the terminal device receives the configuration information sent by the access network device. The configuration information includes the N channel resource sets, and configuration information of the N channel resource sets corresponding to different terminal devices is different.

The embodiment of the present invention specifically provides the method for determining, by the terminal device, according to the size of the UCI, the channel resource set matching the

Pegasus_PriorArt_0010322

Petitioners' Exhibit 1009
Ericsson Inc., et al. v. KT Corporation, et al.
Case No. IPR2025-00083; U.S. Patent No. 10,638,463
Page 27 of 59

size of the UCI from the at least two channel resource sets as the first channel resource set.

FIG. 4 is a flowchart of an uplink control information receiving method provided in another embodiment of the present invention. In the embodiment of the present invention, the uplink control information sending method is provided for a case in which as a quantity of uplink channels increases continuously, a quantity of bits of channel indication information sent downward by an access network device increases continuously, leading to relatively large consumption of downlink channel resources. Specific steps of the method are as follows.

Step S401: An access network device sends channel indication information to a terminal device via a physical control channel.

The embodiment of the present invention relates to an access network device and a terminal device in an LTE system. The access network device is specifically a base station, and the access network device sends downlink data to a same terminal device by using at least one of a plurality of carriers. For downlink data on each carrier, the terminal device separately performs acknowledgment and generates HARQ-ACK information. In addition, the access network device sends a reference signal to the terminal device by using each carrier. The terminal device obtains channel state information CSI corresponding to each carrier by detecting the reference signal on each carrier. The access network device feeds back uplink control information UCI to the access network device via an uplink channel. The UCI includes at least one of the HARQ-ACK information or the channel state information CSI.

Before the access network device feeds back the uplink control information UCI to the access network device via the uplink channel, the access network device sends the channel indication information to the terminal device via the physical control channel. The physical control channel is specifically a physical downlink control channel (PDCCH) and an enhanced physical downlink control channel (EPDCCH). Information borne on the physical control channel is dynamically configured information. That is, the channel indication information is borne on the physical control channel as dynamically configured information, and is sent by the access network device to the terminal device.

Step S402: The access network device pre-configures N channel resource sets for the terminal device, so that the terminal device determines one channel resource set from the N channel resource sets as a first channel resource set, and determines a channel resource indicated by the channel indication information in the first channel resource set, wherein N is a positive

Pegasus_PriorArt_0010323

Petitioners' Exhibit 1009
Ericsson Inc., et al. v. KT Corporation, et al.
Case No. IPR2025-00083; U.S. Patent No. 10,638,463
Page 28 of 59

integer greater than or equal to 2, and each of the *N* channel resource sets includes at least two channel resources.

In the embodiment of the present invention, step S401 may be performed first and then step S402 may be performed, or step S402 may be performed first and then step S401 may be performed. The access network device pre-configures the *N* channel resource sets for the terminal device, wherein *N* is a positive integer greater than or equal to 2, and each of the *N* channel resource sets includes at least two channel resources. The terminal device determines one channel resource set from the *N* channel resource sets as the first channel resource set. Specifically, determining the one channel resource set from the *N* channel resource sets as the first channel resource set may be according to a type or size of the UCI fed back by the terminal device to the access network device. The type of the UCI may be specifically distinguished by using specific content included in the UCI, and the size of the UCI may be specifically measured by using a quantity of bits of the UCI or a quantity of UCI. After the first channel resource set is determined, the terminal device determines a channel resource indicated by the channel indication information in the first channel resource set. Specifically, the channel resource indicated by the channel indication information is a channel resource in the first channel resource set. For example, the first channel resource set includes four channel resources: a channel resource a, a channel resource b, a channel resource c, and a channel resource d. It is predefined that channel indication information 00 indicates the channel resource a, channel indication information 01 indicates the channel resource b, channel indication information 10 indicates the channel resource c, and channel indication information 11 indicates the channel resource d. According to an indication of the channel indication information, the channel resource may be determined from the first channel resource set.

Step S403: The access network device receives uplink control information UCI sent by the terminal device on the channel resource.

The access network device receives the uplink control information UCI sent by the terminal device on the determined channel resource. That is, the channel resource is used as the uplink channel to bear the uplink control information UCI.

In the embodiment of the present invention, the access network device sends configuration information including the at least two channel resource sets to the terminal device, wherein each channel resource set includes at least two channel resources. This is equivalent to that all channel

Pegasus_PriorArt_0010324

Petitioners' Exhibit 1009
Ericsson Inc., et al. v. KT Corporation, et al.
Case No. IPR2025-00083; U.S. Patent No. 10,638,463
Page 29 of 59

resources allocated by the access network device to the terminal device are grouped, and each group is equivalent to one channel resource set. The terminal device first determines the first channel resource set of the plurality of channel resource sets, and then determines the channel resource from the first channel resource set according to the channel indication information. Different channel resources may be determined at different times in a subframe according to the same channel indication information, whereas in the prior art, only one channel resource can be determined at different times in a subframe according to the same channel indication information. As a quantity of channel resources increases continuously, a quantity of bits that need to be added to the channel indication information in the embodiment of the present invention is less than that in the prior art, reducing consumption of downlink channel resources by the channel indication information in a downward transmission process.

On the basis of the above embodiment, each of the *N* channel resource sets includes a same quantity of channel resources. As shown in FIGS. 2 and 3, all the channel resource sets include a same quantity of channel resources. In addition, all the channel resource sets may also include different quantities of channel resources.

At least one of the *N* channel resource sets includes at least two channel resources having different formats. A channel resource set includes channel resources having at least two different formats. For example, the four channel resources in the channel resource set A may have two formats, three formats, or four formats. A format of the channel resource is shown in FIG. 17. The five formats detailed in the above embodiment are not described here again.

At least one of the *N* channel resource sets includes at least two channel resources having a same format but different channel capacities. For example, the channel resource 1-1 and the channel resource 1-2 in the channel resource set A have the same format but different channel capacities.

The UCI further includes scheduling request information SR.

Before the access network device sends the channel indication information to the terminal device via the physical control channel, the method further includes: sending, by the access network device, configuration information of the *N* channel resource sets to the terminal device by means of high layer signaling, wherein configuration information of the N channel resource sets corresponding to different terminal devices is different.

Before the access network device sends the channel indication information to the terminal

Pegasus_PriorArt_0010325

Petitioners' Exhibit 1009
Ericsson Inc., et al. v. KT Corporation, et al.
Case No. IPR2025-00083; U.S. Patent No. 10,638,463
Page 30 of 59

device via the physical control channel, the access network device sends the configuration information to the terminal device. The configuration information includes the *N* channel resource sets, and configuration information of the N channel resource sets corresponding to different terminal devices is different.

The embodiment of the present invention specifically provides the method for determining, by the terminal device, according to the type of the UCI or the size of the UCI, the one channel resource set matching the type of the UCI or the size of the UCI from the two channel resource sets as the first channel resource set.

FIG. 5 is a flowchart of an uplink control information sending method provided in another embodiment of the present invention. In the embodiment of the present invention, the uplink control information sending method is provided for a case in which a capacity of an uplink channel specified by an access network device for the terminal device by using channel indication information does not meet a size of UCI, leading to relatively low utilization of the uplink channel or losses of UCI bits. Specific steps of the method are as follows:

Step S501: A terminal device receives channel indication information from an access network device via a physical control channel.

The terminal device receives, via the physical control channel, the channel indication information sent by the access network device. The physical control channel is specifically a physical downlink control channel (PDCCH) and an enhanced physical downlink control channel (EPDCCH). Information borne on the physical control channel is dynamically configured information. That is, the channel indication information is borne on the physical control channel as dynamically configured information, and is sent by the access network device to the terminal device. The channel indication information is specifically channel indication information.

Step S502: The terminal device determines a first channel resource from *N* channel resources according to the channel indication information, wherein *N* is a positive integer greater than or equal to 2, and the *N* channel resources are pre-configured by the access network device for the terminal device.

If the access network device allocates to the terminal device four channel resources, which are specifically a channel resource a, a channel resource b, a channel resource c, and a channel resource d. It is predefined that channel indication information 00 indicates the channel resource a, channel indication information 01 indicates the channel resource b, channel indication

Pegasus_PriorArt_0010326

Petitioners' Exhibit 1009
Ericsson Inc., et al. v. KT Corporation, et al.
Case No. IPR2025-00083; U.S. Patent No. 10,638,463
Page 31 of 59

information 10 indicates the channel resource c, and channel indication information 11 indicates the channel resource d. Then, the first channel resource may be determined from the four channel resources according to an indication of the channel indication information. For example, it is determined, according to the indication of the channel indication information, that the first channel resource is the channel resource b.

Step S503: The terminal device increases or decreases the first channel resource to obtain a second channel resource.

The N channel resources correspond to different channel capacities. Before the terminal device increases or decreases the first channel resource to obtain a second channel resource, the method further includes: determining, by the terminal device, a size of the UCI. Increasing or decreasing, by the terminal device, the first channel resource to obtain a second channel resource includes: if a channel capacity corresponding to the first channel resource is greater than the size of the UCI, decreasing, by the terminal device, the first channel resource to obtain the second channel resource; or if a channel capacity corresponding to the first channel resource is less than the size of the UCI, increasing, by the terminal device, the first channel resource to obtain the second channel resource.

Step S504: The terminal device sends uplink control information UCI to the access network device on the second channel resource.

The first channel resource is modified to obtain the second channel resource in step S503, so that a capacity corresponding to the second channel resource matches the size of the uplink control information UCI. The terminal device sends the UCI to the access network device on the second channel resource.

In the embodiment of the present invention, one of the at least two channel resources is determined as the first channel resource by means of the channel indication information. The first channel resource is increased or decreased according to capacity information corresponding to the first channel resource and the size of the uplink control information UCI generated by the terminal device, to obtain the second channel resource. The terminal device sends the UCI to the access network device by means of the second channel resource, so that a capacity corresponding to the second channel resource matches the size of the UCI. That is, when the first channel resource is greater than the size of the uplink control information UCI, the first channel resource is decreased to increase utilization of the uplink channel. When the first channel resource is less

Pegasus_PriorArt_0010327

Petitioners' Exhibit 1009
Ericsson Inc., et al. v. KT Corporation, et al.
Case No. IPR2025-00083; U.S. Patent No. 10,638,463
Page 32 of 59

than the size of the uplink control information UCI, the first channel resource is increased to prevent discarding of UCI bits.

FIG. 6 is a schematic diagram of a channel resource provided in another embodiment of the present invention. FIG. 7 is a schematic diagram of a channel resource provided in another embodiment of the present invention. On the basis of the above embodiment, decreasing, by the terminal device, the first channel resource to obtain the second channel resource includes: decreasing, by the terminal device, the channel capacity of the first channel resource by k basic channel units to obtain the second channel resource, so that the size R_a of the UCI meets $R_b-(k+1)R_0<R_a\leq R_b-kR_0$, where R_b indicates a channel capacity of the first channel resource, and R_0 indicates a size of the basic channel unit.

In the embodiment of the present invention, the channel capacity of the first channel resource is represented by R_b, and the size of the UCI is represented by R_a. For example, at a time in subframe n, if the capacity corresponding to the first channel resource determined by the terminal device by means of the channel indication information is greater than the size of the UCI, that is, $R_b>R_a$, the channel capacity of the first channel resource is decreased. Specifically, the channel capacity of the first channel resource is in a unit of a basic channel unit, and it is preset that the size of the basic channel unit is R_0. A difference between R_b and R_a is divided by R_0, and then an obtained result is rounded up to obtain a quantity k of basic channel units that need to be subtracted, so that the size R_a of the UCI meets $R_b-(k+1)R_0<R_a\leq R_b-kR_0$. In different subframes, sizes of the UCI are different. Therefore, in different subframes, different quantities of basic channel units need to be subtracted from first channel resources having a same size. For example, at a time in subframe n, four basic channel units need to be subtracted from the first channel resource. At a time in subframe m, seven basic channel units need to be subtracted from the first channel resource.

A subcarrier whose frequency is the highest in the k basic channel units is adjacent to a subcarrier whose frequency is the lowest in the first channel resource; or a subcarrier whose frequency is the lowest in the k basic channel units is adjacent to a subcarrier whose frequency is the highest in the first channel resource.

As shown in FIG. 6, a frequency increases in a direction of an arrow f. Specifically, the subcarrier whose frequency is the highest in the k basic channel units is adjacent to the subcarrier whose frequency is the lowest in the first channel resource. That is, the first channel resource

Pegasus_PriorArt_0010328

Petitioners' Exhibit 1009
Ericsson Inc., et al. v. KT Corporation, et al.
Case No. IPR2025-00083; U.S. Patent No. 10,638,463
Page 33 of 59

may be decreased from a low frequency band of the first channel resource.

As shown in FIG. 7, a frequency increases in a direction of an arrow f. Specifically, the subcarrier whose frequency is the lowest in the k basic channel units is adjacent to the subcarrier whose frequency is the highest in the first channel resource. That is, the first channel resource may be decreased from a high frequency band of the first channel resource.

FIG. 8 is a schematic diagram of a channel resource provided in another embodiment of the present invention. FIG. 9 is a schematic diagram of a channel resource provided in another embodiment of the present invention. On the basis of the above embodiment, increasing, by the terminal device, the first channel resource to obtain the second channel resource includes: increasing, by the terminal device, the channel capacity of the first channel resource by k basic channel units, so that the size R_a of the UCI meets $R_b+(k-1)R_0<R_a\leq R_b+kR_0$, where R_b indicates a channel capacity of the first channel resource, and R_0 indicates a size of the basic channel unit.

In the embodiment of the present invention, the channel capacity of the first channel resource is represented by R_b, and the size of the UCI is represented by R_a. For example, at a time in subframe n, if the capacity corresponding to the first channel resource determined by the terminal device by means of the channel indication information is less than the size of the UCI, that is, $R_b<R_a$, the channel capacity of the first channel resource is increased. Specifically, the channel capacity of the first channel resource is in a unit of a basic channel unit, and it is preset that the size of the basic channel unit is R_0. A difference between R_a and R_b is divided by R_0, and then an obtained result is rounded up to obtain a quantity k of basic channel units that need to be subtracted, so that the size R_a of the UCI meets $R_b+(k-1)R_0<R_a\leq R_b+kR_0$. In different subframes, sizes of the UCI are different. Therefore, in different subframes, different quantities of basic channel units need to be subtracted from first channel resources having a same size. For example, at a time in subframe n, four basic channel units need to be added to the first channel resource. At a time in subframe m, seven basic channel units need to be added to the first channel resource.

A subcarrier whose frequency is the highest in the k basic channel units is adjacent to a subcarrier whose frequency is the lowest in the first channel resource; or a subcarrier whose frequency is the lowest in the k basic channel units is adjacent to a subcarrier whose frequency is the highest in the first channel resource.

As shown in FIG. 8, a frequency increases in a direction of an arrow f. Specifically, the subcarrier whose frequency is the highest in the k basic channel units is adjacent to the subcarrier

Pegasus_PriorArt_0010329

Petitioners' Exhibit 1009
Ericsson Inc., et al. v. KT Corporation, et al.
Case No. IPR2025-00083; U.S. Patent No. 10,638,463
Page 34 of 59

whose frequency is the lowest in the first channel resource. That is, the first channel resource may be increased from a low frequency band of the first channel resource.

As shown in FIG. 9, a frequency increases in a direction of an arrow f. Specifically, the subcarrier whose frequency is the lowest in the *k* basic channel units is adjacent to the subcarrier whose frequency is the highest in the first channel resource. That is, the first channel resource may be increased from a high frequency band of the first channel resource.

In the embodiment of the present invention, the UCI includes at least one of HARQ-ACK information of the terminal device for received downlink data or channel state information CSI generated by the terminal device.

The UCI further includes scheduling request information SR.

Before the terminal device receives the channel indication information from the access network device via the physical control channel, the method further includes: receiving, by the terminal device, configuration information of the N channel resources from the access network device by means of high layer signaling, wherein configuration information of the N channel resource sets corresponding to different terminal devices is different.

Before the terminal device receives the channel indication information from the access network device via the physical control channel, the terminal device further receives the configuration information sent by the access network device by means of high layer signaling. The configuration information includes the N channel resources, and configuration information of the N channel resource sets corresponding to different terminal devices is different.

In the embodiment of the present invention, the first channel resource is increased or decreased in a unit of a basic channel unit, to obtain the second channel resource, so that the capacity corresponding to the second channel resource matches the size of the UCI. That is, when the first channel resource is greater than the size of the uplink control information UCI, the first channel resource is decreased to increase utilization of the uplink channel. When the first channel resource is less than the size of the uplink control information UCI, the first channel resource is increased to prevent discarding of UCI bits.

FIG. 10 is a flowchart of an uplink control information receiving method provided in another embodiment of the present invention. In the embodiment of the present invention, the uplink control information sending method is provided for a case in which a capacity of an uplink channel specified by an access network device for the terminal device by using channel

Pegasus_PriorArt_0010330

Petitioners' Exhibit 1009
Ericsson Inc., et al. v. KT Corporation, et al.
Case No. IPR2025-00083; U.S. Patent No. 10,638,463
Page 35 of 59

indication information does not meet a size of UCI, leading to relatively low utilization of the uplink channel or discarding of UCI bits. Specific steps of the method are as follows:

Step S1001: An access network device sends channel indication information to a terminal device via a physical control channel, so that the terminal device determines a first channel resource from *N* channel resources according to the channel indication information, and increases or decreases the first channel resource to obtain a second channel resource, where *N* is a positive integer greater than or equal to 2, and the *N* channel resources are pre-configured by the access network device for the terminal device.

The terminal device receives, via the physical control channel, the channel indication information sent by the access network device. The physical control channel is specifically a physical downlink control channel (PDCCH) and an enhanced physical downlink control channel (EPDCCH). Information borne on the physical control channel is dynamically configured information. That is, the channel indication information is borne on the physical control channel as dynamically configured information, and is sent by the access network device to the terminal device. The channel indication information is specifically channel indication information. If the access network device allocates to the terminal device four channel resources, which are specifically a channel resource a, a channel resource b, a channel resource c, and a channel resource d. It is predefined that channel indication information 00 indicates the channel resource a, channel indication information 01 indicates the channel resource b, channel indication information 10 indicates the channel resource c, and channel indication information 11 indicates the channel resource d. Then, the first channel resource may be determined from the four channel resources according to an indication of the channel indication information. For example, it is determined, according to the indication of the channel indication information, that the first channel resource is the channel resource b. The *N* channel resources correspond to different channel capacities. Before the terminal device increases or decreases the first channel resource to obtain a second channel resource, the method further includes: determining, by the terminal device, a size of the UCI. Increasing or decreasing, by the terminal device, the first channel resource to obtain a second channel resource includes: if a channel capacity corresponding to the first channel resource is greater than the size of the UCI, decreasing, by the terminal device, the first channel resource to obtain the second channel resource; or if a channel capacity corresponding to the first channel resource is less than the size of the UCI, increasing, by the

Pegasus_PriorArt_0010331

Petitioners' Exhibit 1009
Ericsson Inc., et al. v. KT Corporation, et al.
Case No. IPR2025-00083; U.S. Patent No. 10,638,463
Page 36 of 59

terminal device, the first channel resource to obtain the second channel resource.

Step S1002: The access network device receives uplink control information UCI sent by the terminal device on the second channel resource.

The first channel resource is modified to obtain the second channel resource, so that a capacity corresponding to the second channel resource matches the size of the uplink control information UCI. The access network device receives the UCI sent by the terminal device by means of the second channel resource.

In the embodiment of the present invention, the UCI includes at least one of HARQ-ACK information of the terminal device for received downlink data or channel state information CSI generated by the terminal device.

The UCI further includes scheduling request information SR.

Before the access network device sends the channel indication information to the terminal device via the physical control channel, the method further includes: sending, by the access network device, configuration information of the *N* channel resources to the terminal device by means of high layer signaling, wherein configuration information of the N channel resource sets corresponding to different terminal devices is different.

Before the access network device sends the channel indication information to the terminal device via the physical control channel, the access network device sends the configuration information to the terminal device by means of high layer signaling. The configuration information includes the N channel resource sets, and configuration information of the N channel resource sets corresponding to different terminal devices is different.

In the embodiment of the present invention, one of the at least two channel resources is determined as the first channel resource by means of the channel indication information. The first channel resource is increased or decreased according to capacity information corresponding to the first channel resource and the size of the uplink control information UCI generated by the terminal device, to obtain the second channel resource. The terminal device sends the UCI to the access network device by means of the second channel resource, so that a capacity corresponding to the second channel resource matches the size of the UCI. That is, when the first channel resource is greater than the size of the uplink control information UCI, the first channel resource is decreased to increase utilization of the uplink channel. When the first channel resource is less than the size of the uplink control information UCI, the first channel resource is increased to

Pegasus_PriorArt_0010332

Petitioners' Exhibit 1009
Ericsson Inc., et al. v. KT Corporation, et al.
Case No. IPR2025-00083; U.S. Patent No. 10,638,463
Page 37 of 59

prevent discarding of UCI bits.

FIG. 11 is a structural diagram of a terminal device provided in an embodiment of the present invention. The terminal device provided in the embodiment of the present invention may perform the processing procedure provided in the embodiment of the uplink control information sending method. As shown in FIG. 11, the terminal device 110 includes a first receiving unit 111, a first processing unit 112, and a first sending unit 113. The first receiving unit 111 is configured to receive channel indication information from an access network device via a physical control channel. The first processing unit 112 is configured to: determine one channel resource set from *N* channel resource sets as a first channel resource set, wherein *N* is a positive integer greater than or equal to 2, the *N* channel resource sets are pre-configured by the access network device for the terminal device, and each of the *N* channel resource sets includes at least two channel resources; and determine a channel resource indicated by the channel indication information in the first channel resource set. The first sending unit 113 is configured to send uplink control information UCI to the access network device on the channel resource.

The first processing unit 112 in the embodiment of the present invention may be implemented by a processor.

In the embodiment of the present invention, the access network device sends configuration information including the at least two channel resource sets to the terminal device, wherein each channel resource set includes at least two channel resources. This is equivalent to that all channel resources allocated by the access network device to the terminal device are grouped, and each group is equivalent to one channel resource set. The terminal device first determines the first channel resource set of the plurality of channel resource sets, and then determines the channel resource from the first channel resource set according to the channel indication information. Different channel resources may be determined at different times in a subframe according to the same channel indication information, whereas in the prior art, only one channel resource can be determined at different times in a subframe according to the same channel indication information. As a quantity of channel resources increases continuously, a quantity of bits that need to be added to the channel indication information in the embodiment of the present invention is less than that in the prior art, reducing consumption of downlink channel resources by the channel indication information in a downward transmission process.

On the basis of the above embodiment, the first processing unit 112 is further configured to

Pegasus_PriorArt_0010333

Petitioners' Exhibit 1009
Ericsson Inc., et al. v. KT Corporation, et al.
Case No. IPR2025-00083; U.S. Patent No. 10,638,463
Page 38 of 59

determine a type of the UCI. The first processing unit 112 is specifically configured to determine the one channel resource set matching the type of the UCI from the *N* channel resource sets as the first channel resource set.

The type of the UCI includes a first type and a second type, and N=2. The first type of UCI includes channel state information CSI and hybrid automatic repeat request-acknowledgment HARQ-ACK information, and a channel resource included in one of the *N* channel resource sets is used to send the first type of UCI. The second type of UCI includes HARQ-ACK information but not CSI, and a channel resource included in another of the *N* channel resource sets is used to send the second type of UCI.

The first processing unit 112 is further configured to determine a size of the UCI. The first processing unit 112 is specifically configured to determine the one channel resource set matching the size K of the UCI from the *N* channel resource sets as the first channel resource set.

The first processing unit 112 is specifically configured to: determine a capacity range corresponding to each of the N channel resource sets; and determine the one channel resource set from the *N* channel resource sets as the first channel resource set, so that the size K of the UCI meets $R_{min} \leq K \leq R_{max}$, wherein a capacity range of the one channel resource set is $[R_{min}, R_{max}]$, R_{min} is a minimum value of a capacity of the one channel resource set, and R_{max} is a maximum value of the capacity of the one channel resource set.

Each of the *N* channel resource sets includes a same quantity of channel resources.

At least one of the *N* channel resource sets includes at least two channel resources having different formats.

Alternatively, at least one of the *N* channel resource sets includes at least two channel resources having a same format but different channel capacities.

The first receiving unit 111 is further configured to receive configuration information of the *N* channel resource sets from the access network device by means of high layer signaling, where configuration information of the *N* channel resource sets corresponding to different terminal devices is different.

The first processing unit 112 in the embodiment of the present invention may be implemented by a processor.

The terminal device provided in the embodiment of the present invention may be specifically configured to perform the above method embodiment provided in FIG. 1. Specific

Pegasus_PriorArt_0010334

Petitioners' Exhibit 1009
Ericsson Inc., et al. v. KT Corporation, et al.
Case No. IPR2025-00083; U.S. Patent No. 10,638,463
Page 39 of 59

functions are not described here again.

The embodiment of the present invention specifically provides the method for determining, by the terminal device, according to the type of the UCI or the size of the UCI, the one channel resource set matching the type of the UCI or the size of the UCI from the plurality of channel resource sets as the first channel resource set.

FIG. 12 is a structural diagram of an access network device provided in an embodiment of the present invention. The access network device provided in the embodiment of the present invention may perform the processing procedure provided in the embodiment of the uplink control information sending method. As shown in FIG. 12, the access network device 120 includes a second sending unit 121, a second processing unit 122, and a second receiving unit 123. The second sending unit 121 is configured to send channel indication information to a terminal device via a physical control channel. The second processing unit 122 is configured to pre-configure *N* channel resource sets for the terminal device, so that the terminal device determines one channel resource set from the *N* channel resource sets as a first channel resource set, and determines a channel resource indicated by the channel indication information in the first channel resource set, wherein *N* is a positive integer greater than or equal to 2, and each of the *N* channel resource sets includes at least two channel resources. The second receiving unit 123 is configured to receive uplink control information UCI sent by the terminal device on the channel resource.

The second processing unit 122 in the embodiment of the present invention may be implemented by a processor.

In the embodiment of the present invention, the access network device sends configuration information including the at least two channel resource sets to the terminal device, wherein each channel resource set includes at least two channel resources. This is equivalent to that all channel resources allocated by the access network device to the terminal device are grouped, and each group is equivalent to one channel resource set. The terminal device first determines the first channel resource set of the plurality of channel resource sets, and then determines the channel resource from the first channel resource set according to the channel indication information. Different channel resources may be determined at different times in a subframe according to the same channel indication information, whereas in the prior art, only one channel resource can be determined at different times in a subframe according to the same channel indication information.

Pegasus_PriorArt_0010335

Petitioners' Exhibit 1009
Ericsson Inc., et al. v. KT Corporation, et al.
Case No. IPR2025-00083; U.S. Patent No. 10,638,463
Page 40 of 59

As a quantity of channel resources increases continuously, a quantity of bits that need to be added to the channel indication information in the embodiment of the present invention is less than that in the prior art, reducing consumption of downlink channel resources by the channel indication information in a downward transmission process.

On the basis of the above embodiment, each of the *N* channel resource sets includes a same quantity of channel resources.

At least one of the *N* channel resource sets includes at least two channel resources having different formats.

Alternatively, at least one of the *N* channel resource sets includes at least two channel resources having a same format but different channel capacities.

The second sending unit 121 is further configured to send configuration information of the *N* channel resource sets to the terminal device by means of high layer signaling, where configuration information of the *N* channel resource sets corresponding to different terminal devices is different.

The access network device provided in the embodiment of the present invention may be specifically configured to perform the above method embodiment provided in FIG. 4. Specific functions are not described here again.

The embodiment of the present invention specifically provides the method for determining, by the terminal device, according to the type of the UCI or the size of the UCI, the one channel resource set matching the type of the UCI or the size of the UCI from the two channel resource sets as the first channel resource set.

FIG. 13 is a structural diagram of a terminal device provided in another embodiment of the present invention. The terminal device provided in the embodiment of the present invention may perform the processing procedure provided in the embodiment of the uplink control information sending method. As shown in FIG. 13, the terminal device 130 includes a third receiving unit 131, a third processing unit 132, and a third sending unit 133. The third receiving unit 131 is configured to receive channel indication information from an access network device via a physical control channel. The third processing unit 132 is configured to: determine a first channel resource from *N* channel resources according to the channel indication information, wherein *N* is a positive integer greater than or equal to 2, and the *N* channel resources are pre-configured by the access network device for the terminal device; and increase or decrease the first channel

Pegasus_PriorArt_0010336

Petitioners' Exhibit 1009
Ericsson Inc., et al. v. KT Corporation, et al.
Case No. IPR2025-00083; U.S. Patent No. 10,638,463
Page 41 of 59

resource to obtain a second channel resource. The third sending unit 133 is configured to send uplink control information UCI to the access network device on the second channel resource.

The third processing unit 132 in the embodiment of the present invention may be implemented by a processor.

In the embodiment of the present invention, one of the at least two channel resources is determined as the first channel resource by means of the channel indication information. The first channel resource is increased or decreased according to capacity information corresponding to the first channel resource and the size of the uplink control information UCI generated by the terminal device, to obtain the second channel resource. The terminal device sends the UCI to the access network device by means of the second channel resource, so that a capacity corresponding to the second channel resource matches the size of the UCI. That is, when the first channel resource is greater than the size of the uplink control information UCI, the first channel resource is decreased to increase utilization of the uplink channel. When the first channel resource is less than the size of the uplink control information UCI, the first channel resource is increased to prevent discarding of UCI bits.

On the basis of the above embodiment, each of the N channel resources corresponds to a different channel capacity. The third processing unit 132 is further configured to determine a size of the UCI. The third processing unit 132 is specifically configured to: if a channel capacity corresponding to the first channel resource is greater than the size of the UCI, decrease the first channel resource to obtain the second channel resource; or if a channel capacity corresponding to the first channel resource is less than the size of the UCI, increase the first channel resource to obtain the second channel resource.

The third processing unit 132 is specifically configured to decrease the channel capacity of the first channel resource by k basic channel units to obtain the second channel resource, so that the size R_a of the UCI meets $R_b-(k+1)R_0<R_a\leq R_b-kR_0$, where R_b indicates a channel capacity of the first channel resource, and R_0 indicates a size of the basic channel unit.

A subcarrier whose frequency is the highest in the k basic channel units is adjacent to a subcarrier whose frequency is the lowest in the first channel resource; or a subcarrier whose frequency is the lowest in the k basic channel units is adjacent to a subcarrier whose frequency is the highest in the first channel resource.

The third processing unit 132 is specifically configured to increase the channel capacity of

Pegasus_PriorArt_0010337

Petitioners' Exhibit 1009
Ericsson Inc., et al. v. KT Corporation, et al.
Case No. IPR2025-00083; U.S. Patent No. 10,638,463
Page 42 of 59

the first channel resource by k basic channel units, so that the size R_a of the UCI meets $R_b+(k-1)R_0<R_a\leq R_b+kR_0$, where R_b indicates a channel capacity of the first channel resource, and R_0 indicates a size of the basic channel unit.

A subcarrier whose frequency is the highest in the k basic channel units is adjacent to a subcarrier whose frequency is the lowest in the first channel resource; or a subcarrier whose frequency is the lowest in the k basic channel units is adjacent to a subcarrier whose frequency is the highest in the first channel resource.

The UCI includes at least one of HARQ-ACK information of the terminal device for received downlink data or channel state information CSI generated by the terminal device.

The third receiving unit 131 is further configured to receive configuration information of the N channel resources from the access network device by means of high layer signaling, where configuration information of the N channel resource sets corresponding to different terminal devices is different.

The third processing unit 132 in the embodiment of the present invention may be implemented by a processor.

The terminal device provided in the embodiment of the present invention may be specifically configured to perform the above method embodiment provided in FIG. 5. Specific functions are not described here again.

In the embodiment of the present invention, the first channel resource is increased or decreased in a unit of a basic channel unit, to obtain the second channel resource, so that the capacity corresponding to the second channel resource matches the size of the UCI. That is, when the first channel resource is greater than the size of the uplink control information UCI, the first channel resource is decreased to increase utilization of the uplink channel. When the first channel resource is less than the size of the uplink control information UCI, the first channel resource is increased to prevent discarding of UCI bits.

FIG. 14 is a structural diagram of an access network device provided in another embodiment of the present invention. The access network device provided in the embodiment of the present invention may perform the processing procedure provided in the embodiment of the uplink control information sending method. As shown in FIG. 14, the access network device 140 includes a fourth sending unit 141 and a fourth receiving unit 142. The fourth sending unit 141 is configured to send channel indication information to a terminal device via a physical control

Pegasus_PriorArt_0010338

Petitioners' Exhibit 1009
Ericsson Inc., et al. v. KT Corporation, et al.
Case No. IPR2025-00083; U.S. Patent No. 10,638,463
Page 43 of 59

channel, so that the terminal device determines a first channel resource from *N* channel resources according to the channel indication information, and increases or decreases the first channel resource to obtain a second channel resource, wherein *N* is a positive integer greater than or equal to 2, and the *N* channel resources are pre-configured by the access network device for the terminal device. The fourth receiving unit 142 is configured to receive uplink control information UCI sent by the terminal device on the second channel resource.

In the embodiment of the present invention, the first channel resource is increased or decreased in a unit of a basic channel unit, to obtain the second channel resource, so that the capacity corresponding to the second channel resource matches the size of the UCI. That is, when the first channel resource is greater than the size of the uplink control information UCI, the first channel resource is decreased to increase utilization of the uplink channel. When the first channel resource is less than the size of the uplink control information UCI, the first channel resource is increased to prevent discarding of UCI bits.

On the basis of the above embodiment, the UCI includes at least one of HARQ-ACK information of the terminal device for received downlink data or channel state information CSI generated by the terminal device.

The UCI further includes scheduling request information SR.

The fourth sending unit 141 is further configured to send configuration information of the *N* channel resource sets to the terminal device by means of high layer signaling, where configuration information of the N channel resource sets corresponding to different terminal devices is different.

The access network device provided in the embodiment of the present invention may be specifically configured to perform the above method embodiment provided in FIG. 10. Specific functions are not described here again.

In the embodiment of the present invention, one of the at least two channel resources is determined as the first channel resource by means of the channel indication information. The first channel resource is increased or decreased according to capacity information corresponding to the first channel resource and the size of the uplink control information UCI generated by the terminal device, to obtain the second channel resource. The terminal device sends the UCI to the access network device by means of the second channel resource, so that a capacity corresponding to the second channel resource matches the size of the UCI. That is, when the first channel

Pegasus_PriorArt_0010339

Petitioners' Exhibit 1009
Ericsson Inc., et al. v. KT Corporation, et al.
Case No. IPR2025-00083; U.S. Patent No. 10,638,463
Page 44 of 59

resource is greater than the size of the uplink control information UCI, the first channel resource is decreased to increase utilization of the uplink channel. When the first channel resource is less than the size of the uplink control information UCI, the first channel resource is increased to prevent discarding of UCI bits.

FIG. 15 is a structural diagram of an uplink control information sending and receiving system provided in an embodiment of the present invention. The uplink control information sending and receiving system provided in the embodiment of the present invention may perform the processing procedures provided in the embodiments of the uplink control information sending method and the uplink control information receiving method. As shown in FIG. 15, the uplink control information sending and receiving system 150 includes the terminal device 110 and the access network device 120 described in the above embodiments.

The uplink control information sending and receiving system provided in the embodiment of the present invention may perform the processing procedures provided in the embodiments of the uplink control information sending method and the uplink control information receiving method.

FIG. 16 is a structural diagram of an uplink control information sending and receiving system provided in another embodiment of the present invention. The uplink control information sending and receiving system provided in the embodiment of the present invention may perform the processing procedures provided in the embodiments of the uplink control information sending method and the uplink control information receiving method. As shown in FIG. 16, the uplink control information sending and receiving system 160 includes the terminal device 130 and the access network device 140 described in the above embodiments.

The uplink control information sending and receiving system provided in the embodiment of the present invention may perform the processing procedures provided in the embodiments of the uplink control information sending method and the uplink control information receiving method.

In summary, the embodiments of the present invention provide the method for determining, by the terminal device, according to the type or the size of the UCI, the one channel resource set matching the type or the size of the UCI from the plurality of channel resource sets as the first channel resource set, and specifically provide the method for determining, by the terminal device according to the type or the size of the UCI, a channel resource set matching the type or the size

Pegasus_PriorArt_0010340

Petitioners' Exhibit 1009
Ericsson Inc., et al. v. KT Corporation, et al.
Case No. IPR2025-00083; U.S. Patent No. 10,638,463
Page 45 of 59

of the UCI from the plurality of channel resource sets as the first channel resource set: One of the at least two channel resources is determined as the first channel resource by means of the channel indication information. The first channel resource is increased or decreased according to capacity information corresponding to the first channel resource and the size of the uplink control information UCI generated by the terminal device, to obtain the second channel resource. The terminal device sends the UCI to the access network device by means of the second channel resource, so that a capacity corresponding to the second channel resource matches the size of the UCI. That is, when the first channel resource is greater than the size of the uplink control information UCI, the first channel resource is decreased to increase utilization of the uplink channel. When the first channel resource is less than the size of the uplink control information UCI, the first channel resource is increased to prevent discarding of UCI bits.

In several embodiments provided by the present invention, it should be understood that the disclosed apparatuses and methods may be implemented in other manners. For example, the apparatus embodiments described above are only schematic. For example, the division of the units is only a division of logical functions. In actual implementation, there may be other divisions, for example, a plurality of units or components may be combined or can be integrated into another system, or some features can be ignored, or not executed. In addition, coupling or direct coupling or communicative connection between each other shown or discussed may be an indirect coupling or communication connection through some interfaces, apparatuses, or units, and may be electrical, mechanical, or otherwise.

The units described as separate components may or may not be physically separated, and the components displayed as units may or may not be physical units, that is, they may be located in one place, or may be distributed to a plurality of network units. Some or all of the units may be selected according to actual needs to achieve the purpose of the solution of this embodiment.

In addition, the functional units in the embodiments of the present invention may be integrated into one processing unit, or each unit may exist physically separately, or two or more units may be integrated into one unit. The above integrated unit may be implemented in the form of hardware or in the form of hardware plus software functional units.

The above integrated units implemented in the form of software functional units may be stored in a computer-readable storage medium. The above software functional units are stored in a storage medium, which includes several instructions to cause a computer device (which may be

Pegasus_PriorArt_0010341

Petitioners' Exhibit 1009
Ericsson Inc., et al. v. KT Corporation, et al.
Case No. IPR2025-00083; U.S. Patent No. 10,638,463
Page 46 of 59

a personal computer, a server, a network device, or the like) or a processor to execute some of the steps of the methods described in the embodiments of the present invention. However, the above storage medium includes: a U disk, a mobile hard disk, a read-only memory (ROM), a random access memory (RAM), a magnetic disk, or an optical disk, and various media, which can store program codes.

It can be clearly understood by those skilled in the art that for the convenience and brevity of the description, only the division of the above functional modules is used for illustration. In practical applications, the above functional distribution can be completed by different function modules as needed, that is, the internal structure of the apparatus is divided into different functional modules to complete all or part of the functions described above. For a detailed working process of the apparatus described above, reference may be made to a corresponding process in the above method embodiments, and details are not described here again.

Finally, it should be noted that the above embodiments are merely intended to describe the technical solutions of the present invention, but not to limit the present invention. Although the present invention is described in detail with reference to the foregoing embodiments, those of ordinary skill in the art should understand that they may still make modifications to the technical solutions described in the above embodiments or make equivalent replacements to some or all technical features thereof. However, these modifications or replacements do not cause the essence of corresponding technical solutions to deviate from the scope of the technical solutions of the embodiments of the present invention.

Pegasus_PriorArt_0010342

Petitioners' Exhibit 1009
Ericsson Inc., et al. v. KT Corporation, et al.
Case No. IPR2025-00083; U.S. Patent No. 10,638,463
Page 47 of 59

Claims

1. An uplink control information sending method, characterized by comprising:

receiving, by a terminal device, channel indication information from an access network device via a physical control channel;

determining, by the terminal device, one channel resource set from the *N* channel resource sets as a first channel resource set, wherein *N* is a positive integer greater than or equal to 2, the *N* channel resource sets are pre-configured by the access network device for the terminal device, and each of the *N* channel resource sets comprises at least two channel resources;

determining, by the terminal device, a channel resource indicated by the channel indication information in the first channel resource set; and

sending, by the terminal device, uplink control information UCI to the access network device on the channel resource.

2. The method according to claim 1, wherein before determining, by the terminal device, the one channel resource set from the *N* channel resource sets as the first channel resource set, the method further comprises:

determining, by the terminal device, a type of the UCI; and

determining, by the terminal device, the one channel resource set from the *N* channel resource sets as the first channel resource set comprises:

determining, by the terminal device, the one channel resource set matching the type of the UCI from the *N* channel resource sets as the first channel resource set.

3. The method according to claim 2, wherein the type of UCI comprises a first type and a second type, and *N*=2;

wherein the first type of UCI comprises channel state information CSI and hybrid automatic repeat request-acknowledgment HARQ-ACK information, and a channel resource comprised in one of the *N* channel resource sets is used to send the first type of UCI; and

the second type of UCI comprises HARQ-ACK information but not CSI, and a channel resource comprised in another of the *N* channel resource sets is used to send the second type of UCI.

4. The method according to claim 1, wherein before determining, by the terminal device, the one channel resource set from the *N* channel resource sets as the first channel resource set, the

Pegasus_PriorArt_0010343

Petitioners' Exhibit 1009
Ericsson Inc., et al. v. KT Corporation, et al.
Case No. IPR2025-00083; U.S. Patent No. 10,638,463
Page 48 of 59

method further comprises:

determining, by the terminal device, a size of the UCI; and

determining, by the terminal device, the one channel resource set from the *N* channel resource sets as the first channel resource set comprises:

determining, by the terminal device, the one channel resource set matching the size K of the UCI from the *N* channel resource sets as the first channel resource set.

5. The method according to claim 4, wherein determining, by the terminal device, the one channel resource set matching the size K of the UCI from the *N* channel resource sets as the first channel resource set comprises:

determining, by the terminal device, a capacity range corresponding to each of the *N* channel resource sets; and

determining, by the terminal device, the one channel resource set from the *N* channel resource sets as the first channel resource set, so that the size K of the UCI meets $R_{min} \leq K \leq R_{max}$, wherein a capacity range of the one channel resource set is $[R_{min}, R_{max}]$, R_{min} is a minimum value of a capacity of the one channel resource set, and R_{max} is a maximum value of the capacity of the one channel resource set.

6. The method according to any one of claims 1-5, wherein each of the *N* channel resource sets comprises a same quantity of channel resources.

7. The method according to any one of claims 1-6, wherein at least one of the *N* channel resource sets comprises at least two channel resources having different formats.

8. The method according to any one of claims 1-6, wherein at least one of the *N* channel resource sets comprises at least two channel resources having a same format but different channel capacities.

9. The method according to any one of claims 1-6, wherein before receiving, by the terminal device, the channel indication information from the access network device via the physical control channel, the method further comprises:

receiving, by the terminal device, configuration information of the *N* channel resource sets from the access network device by means of high layer signaling, wherein configuration information of the *N* channel resource sets corresponding to different terminal devices is different.

10. An uplink control information receiving method, characterized by comprising:

sending, by an access network device, channel indication information to a terminal device

Pegasus_PriorArt_0010344

Petitioners' Exhibit 1009
Ericsson Inc., et al. v. KT Corporation, et al.
Case No. IPR2025-00083; U.S. Patent No. 10,638,463
Page 49 of 59

via a physical control channel;

pre-configuring, by the access network device, *N* channel resource sets for the terminal device, so that the terminal device determines one channel resource set from the *N* channel resource sets as a first channel resource set, and determines a channel resource indicated by the channel indication information in the first channel resource set, wherein *N* is a positive integer greater than or equal to 2, and each of the *N* channel resource sets comprises at least two channel resources; and

receiving, by the access network device, uplink control information UCI sent by the terminal device on the channel resource.

11. The method according to claim 10, wherein each of the *N* channel resource sets comprises a same quantity of channel resources.

12. The method according to claim 11, wherein at least one of the *N* channel resource sets comprises at least two channel resources having different formats.

13. The method according to claim 11, wherein at least one of the *N* channel resource sets comprises at least two channel resources having a same format but different channel capacities.

14. The method according to any one of claims 10-13, wherein before sending, by the access network device, the channel indication information to the terminal device via the physical control channel, the method further comprises:

sending, by the access network device, configuration information of the *N* channel resource sets to the terminal device by means of high layer signaling, wherein configuration information of the N channel resource sets corresponding to different terminal devices is different.

15. A terminal device, characterized by comprising:

a first receiving unit configured to receive channel indication information from an access network device via a physical control channel;

a first processing unit configured to: determine one channel resource set from *N* channel resource sets as a first channel resource set, wherein *N* is a positive integer greater than or equal to 2, the *N* channel resource sets are pre-configured by the access network device for the terminal device, and each of the *N* channel resource sets comprises at least two channel resources; and determine a channel resource indicated by the channel indication information in the first channel resource set; and

a first sending unit configured to send uplink control information UCI to the access network

Pegasus_PriorArt_0010345

Petitioners' Exhibit 1009
Ericsson Inc., et al. v. KT Corporation, et al.
Case No. IPR2025-00083; U.S. Patent No. 10,638,463
Page 50 of 59

device on the channel resource.

16. The terminal device according to claim 15, wherein the first processing unit is further configured to determine a type of the UCI; and

the first processing unit is specifically configured to determine the one channel resource set matching the type of the UCI from the N channel resource sets as the first channel resource set.

17. The terminal device according to claim 16, wherein the type of UCI comprises a first type and a second type, and N=2;

wherein the first type of UCI comprises channel state information CSI and hybrid automatic repeat request-acknowledgment HARQ-ACK information, and a channel resource comprised in one of the N channel resource sets is used to send the first type of UCI; and

the second type of UCI comprises HARQ-ACK information but not CSI, and a channel resource comprised in another of the N channel resource sets is used to send the second type of UCI.

18. The terminal device according to claim 15, wherein the first processing unit is further configured to determine a size of the UCI; and

the first processing unit is specifically configured to determine the one channel resource set matching the size K of the UCI from the N channel resource sets as the first channel resource set.

19. The terminal device according to claim 18, wherein the first processing unit is specifically configured to: determine a capacity range corresponding to each of the N channel resource sets; and determine the one channel resource set from the N channel resource sets as the first channel resource set, so that the size K of the UCI meets $R_{min} \leq K \leq R_{max}$, wherein a capacity range of the one channel resource set is $[R_{min}, R_{max}]$, R_{min} is a minimum value of a capacity of the one channel resource set, and R_{max} is a maximum value of the capacity of the one channel resource set.

20. The terminal device according to any one of claims 15-19, wherein each of the N channel resource sets comprises a same quantity of channel resources.

21. The terminal device according to any one of claims 15-20, wherein at least one of the N channel resource sets comprises at least two channel resources having different formats.

22. The terminal device according to any one of claims 15-20, wherein at least one of the N channel resource sets comprises at least two channel resources having a same format but different channel capacities.

Pegasus_PriorArt_0010346

Petitioners' Exhibit 1009
Ericsson Inc., et al. v. KT Corporation, et al.
Case No. IPR2025-00083; U.S. Patent No. 10,638,463
Page 51 of 59

23. The terminal device according to any one of claims 15-22, wherein the first receiving unit is further configured to receive configuration information of the *N* channel resource sets from the access network device by means of high layer signaling, where configuration information of the N channel resource sets corresponding to different terminal devices is different.

24. An access network device, characterized by comprising:

a second sending unit configured to send channel indication information to a terminal device via a physical control channel;

a second processing unit configured to pre-configure *N* channel resource sets for the terminal device, so that the terminal device determines one channel resource set from the *N* channel resource sets as a first channel resource set, and determines a channel resource indicated by the channel indication information in the first channel resource set, wherein *N* is a positive integer greater than or equal to 2, and each of the *N* channel resource sets comprises at least two channel resources; and

a second receiving unit configured to receive uplink control information UCI sent by the terminal device on the channel resource.

25. The access network device according to claim 24, wherein each of the *N* channel resource sets comprises a same quantity of channel resources.

26. The access network device according to claim 25, wherein at least one of the *N* channel resource sets comprises at least two channel resources having different formats.

27. The access network device according to claim 25, wherein at least one of the *N* channel resource sets comprises at least two channel resources having a same format but different channel capacities.

28. The access network device according to any one of claims 24-27, wherein the second sending unit is further configured to send configuration information of the *N* channel resource sets to the terminal device by means of high layer signaling, where configuration information of the N channel resource sets corresponding to different terminal devices is different.

29. An uplink control information sending and receiving system, characterized by comprising the terminal device according to any one of claims 15-23, and the access network device according to any one of claims 24-28.

Pegasus_PriorArt_0010347

Petitioners' Exhibit 1009
Ericsson Inc., et al. v. KT Corporation, et al.
Case No. IPR2025-00083; U.S. Patent No. 10,638,463
Page 52 of 59

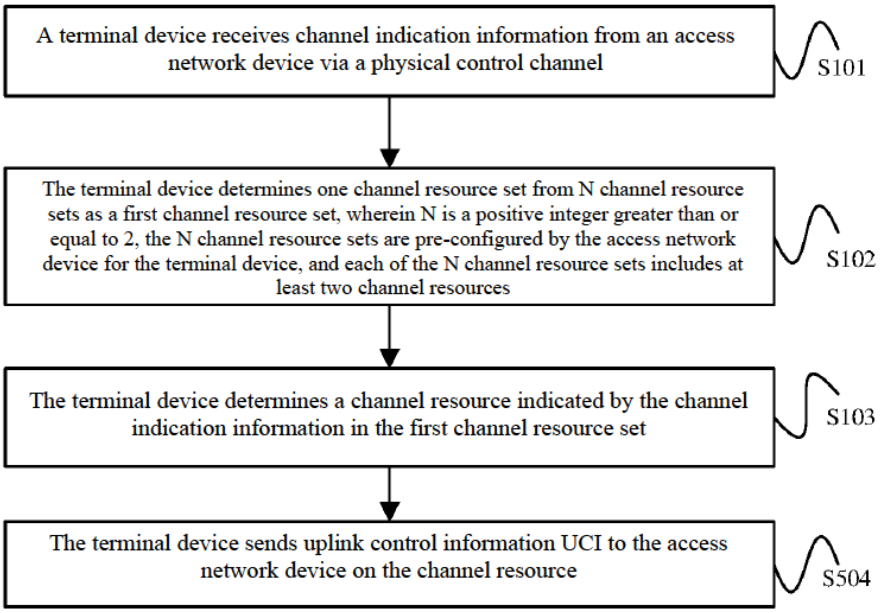

FIG. 1

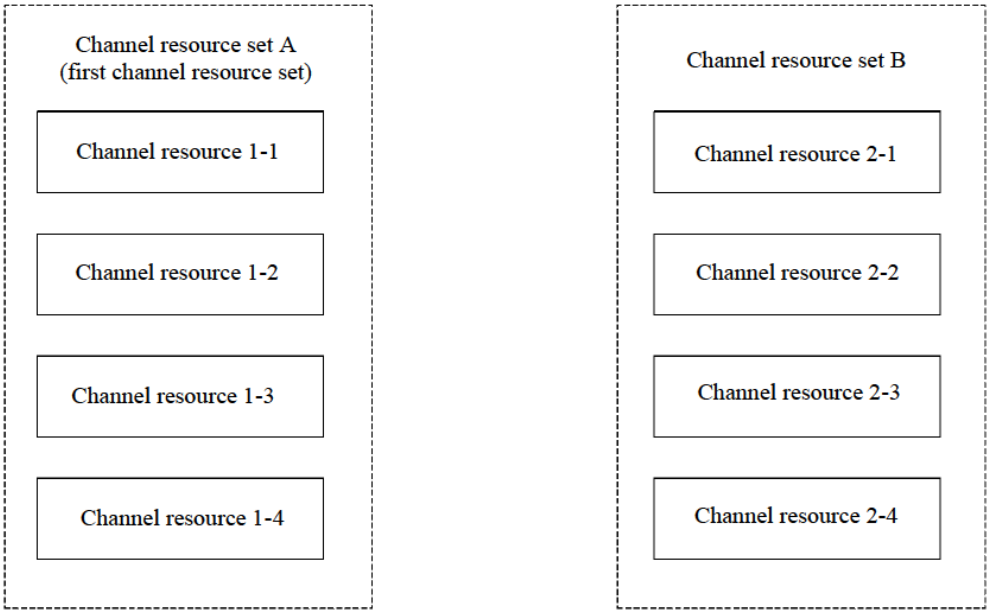

FIG. 2

Petitioners' Exhibit 1009
Ericsson Inc., et al. v. KT Corporation, et al.
Case No. IPR2025-00083; U.S. Patent No. 10,638,463
Page 53 of 59

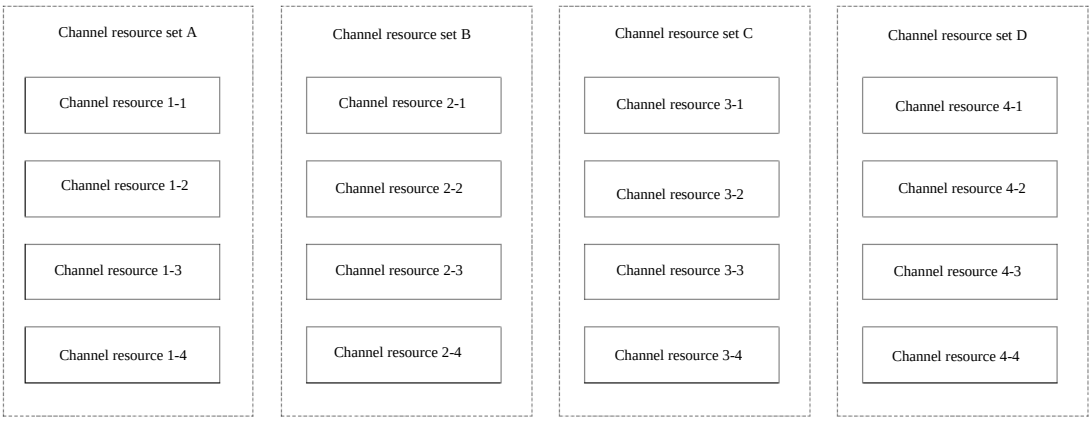

FIG. 3

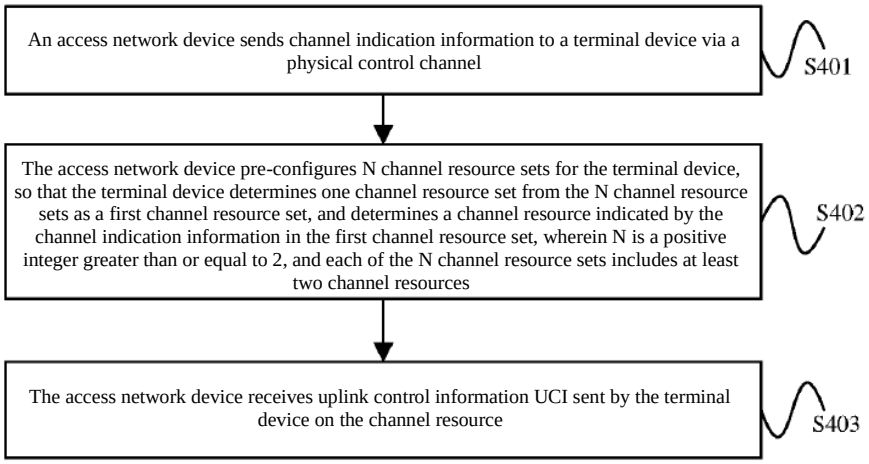

FIG. 4

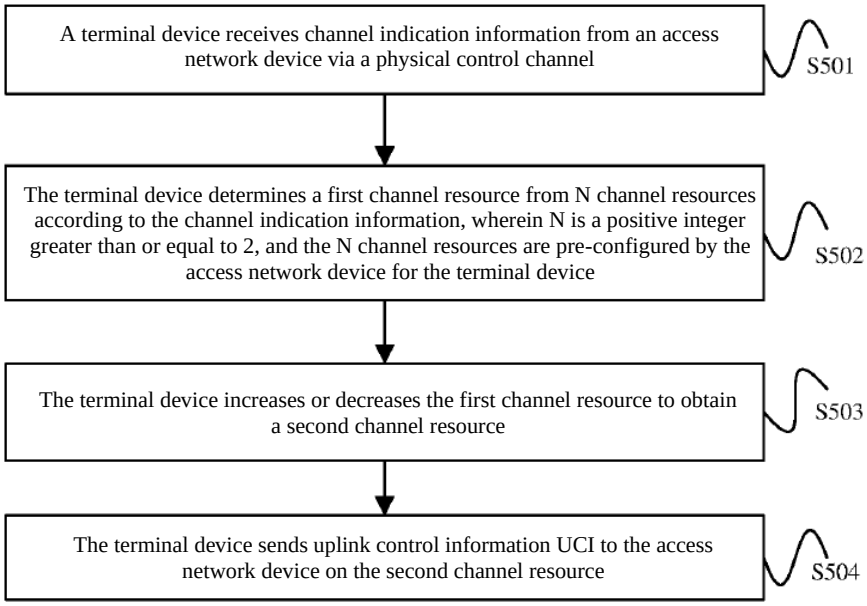

FIG. 5

Petitioners' Exhibit 1009
Ericsson Inc., et al. v. KT Corporation, et al.
Case No. IPR2025-00083; U.S. Patent No. 10,638,463
Page 54 of 59

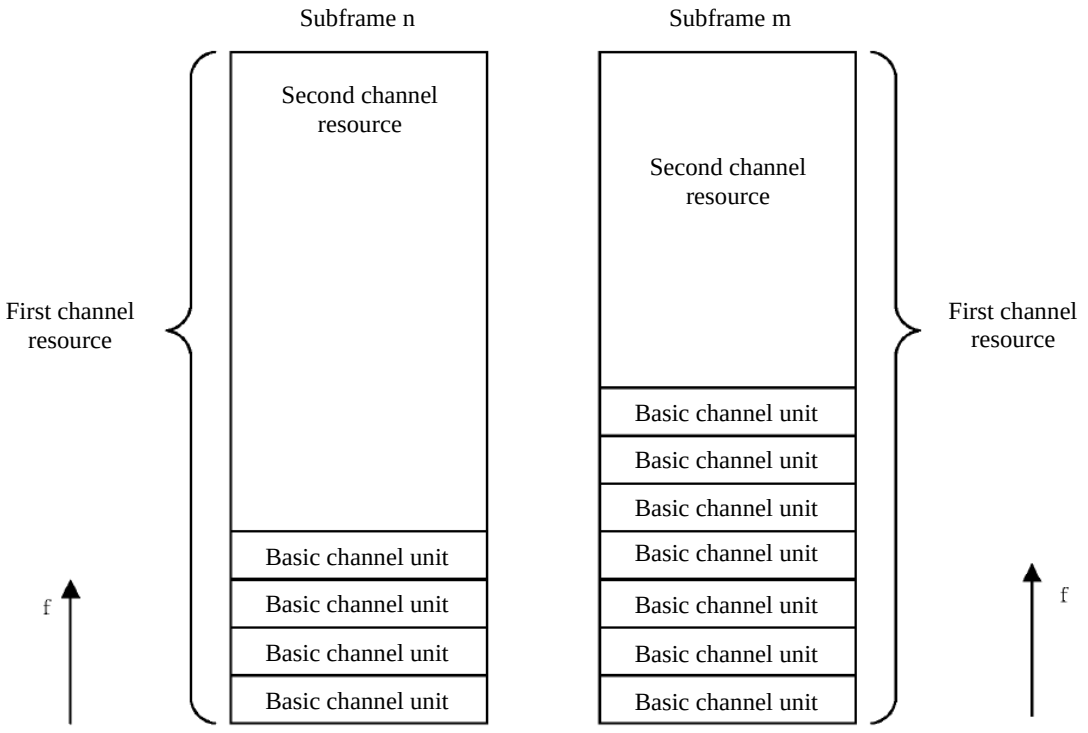

FIG. 6

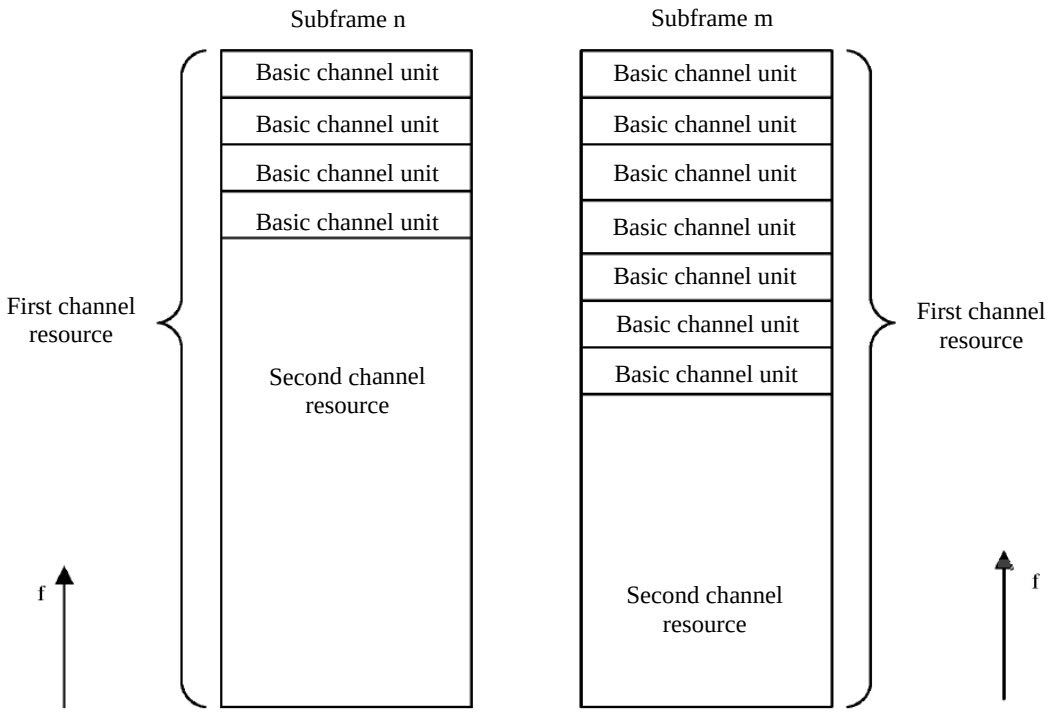

FIG. 7

Petitioners' Exhibit 1009
Ericsson Inc., et al. v. KT Corporation, et al.
Case No. IPR2025-00083; U.S. Patent No. 10,638,463
Page 55 of 59

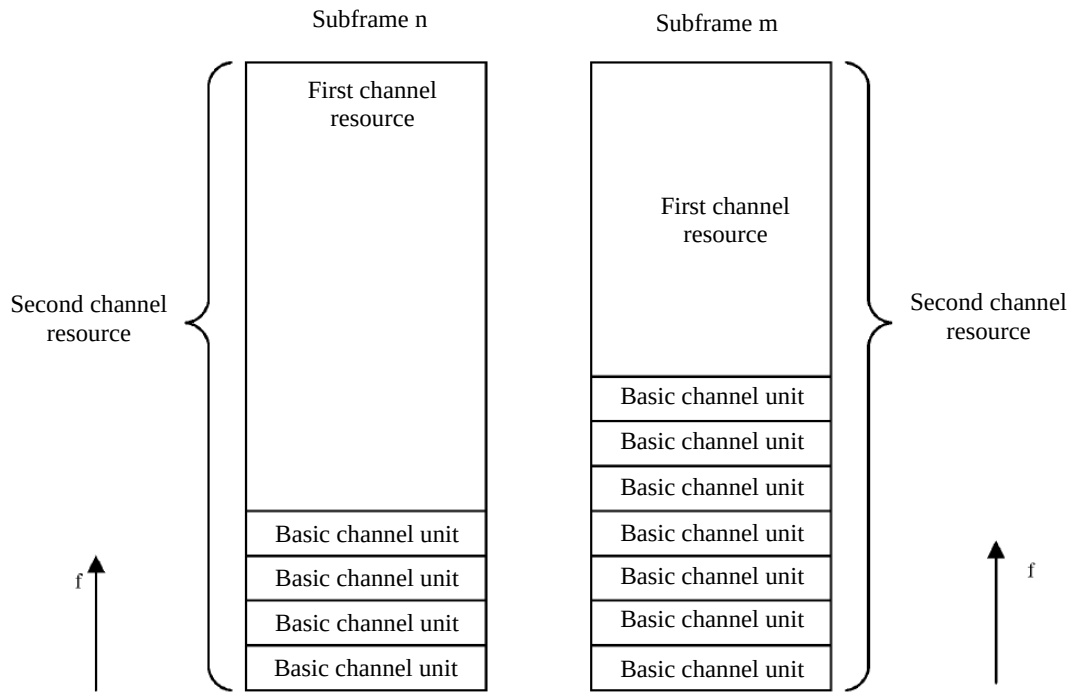

FIG. 8

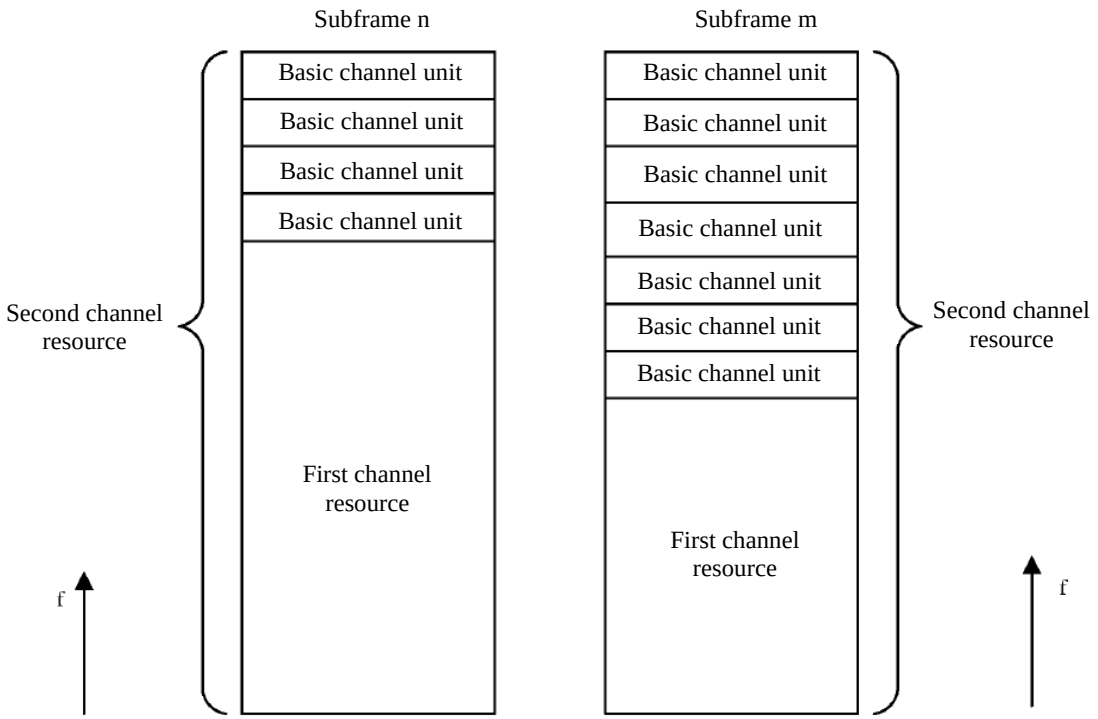

FIG. 9

Petitioners' Exhibit 1009
Ericsson Inc., et al. v. KT Corporation, et al.
Case No. IPR2025-00083; U.S. Patent No. 10,638,463
Page 56 of 59

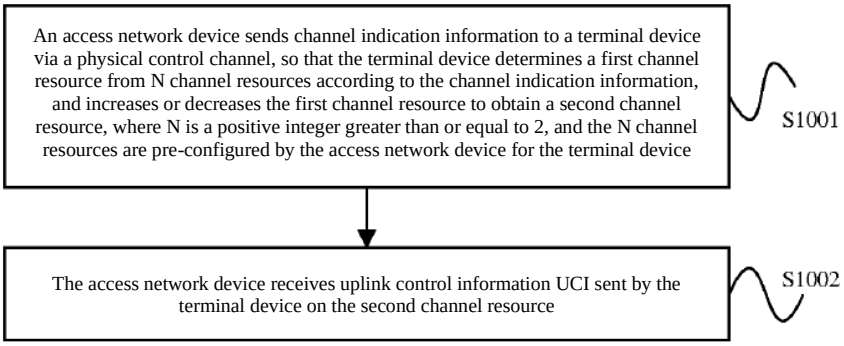

FIG. 10

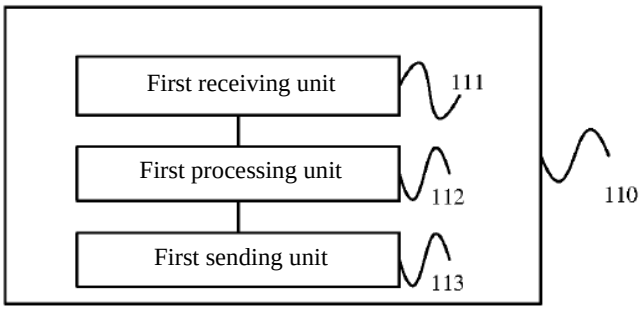

FIG. 11

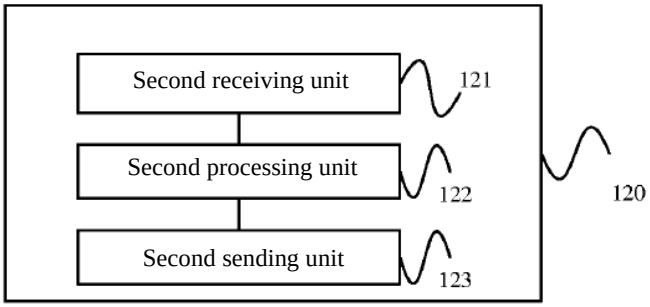

FIG. 12

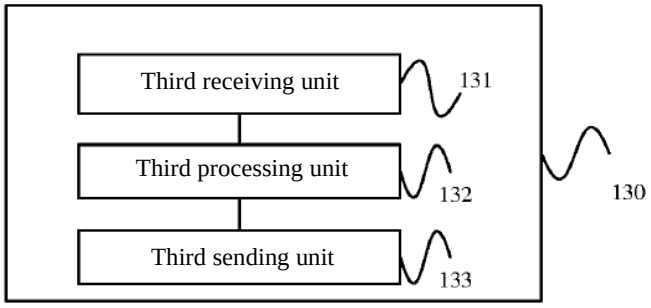

FIG. 13

Petitioners' Exhibit 1009
Ericsson Inc., et al. v. KT Corporation, et al.
Case No. IPR2025-00083; U.S. Patent No. 10,638,463
Page 57 of 59

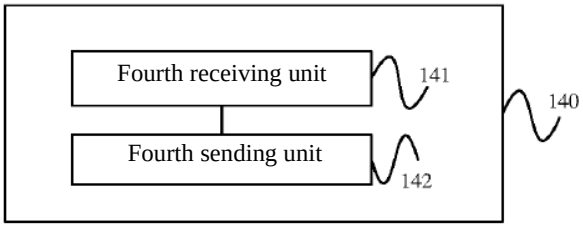

FIG. 14

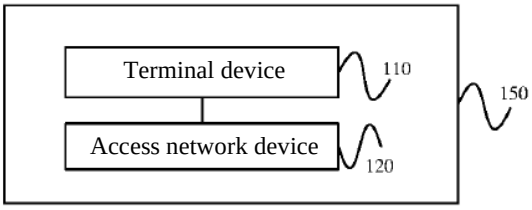

FIG. 15

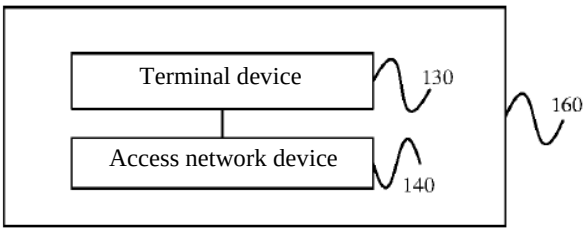

FIG. 16

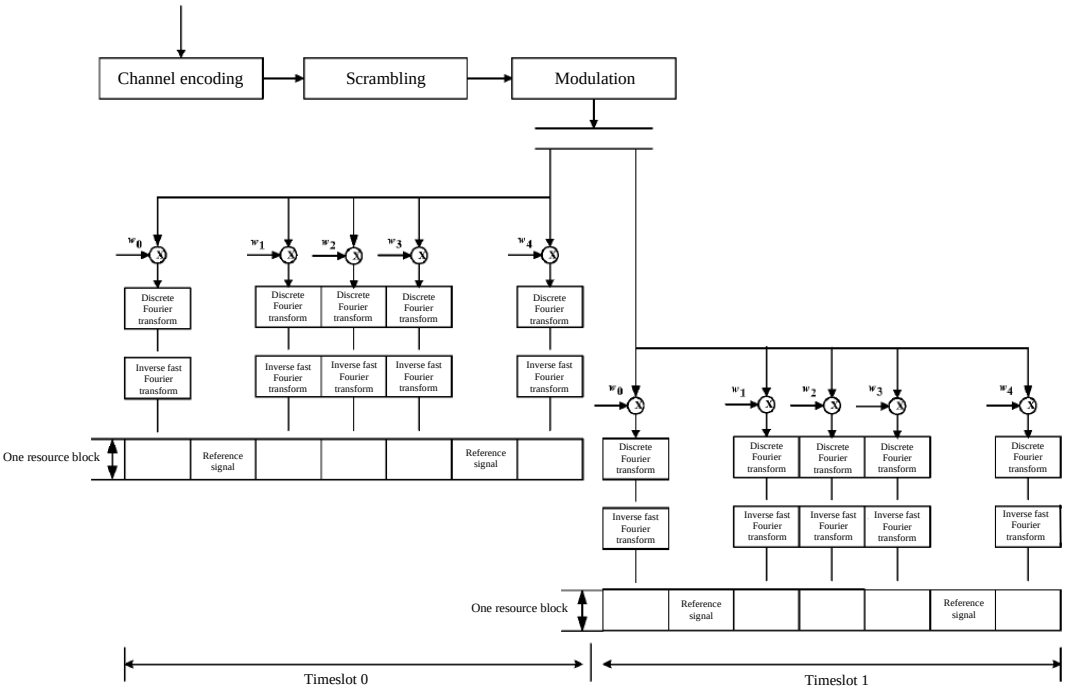

FIG. 17

Petitioners' Exhibit 1009
Ericsson Inc., et al. v. KT Corporation, et al.
Case No. IPR2025-00083; U.S. Patent No. 10,638,463
Page 58 of 59

Questel

TRANSLATOR'S CERTIFICATE OF TRANSLATION

Questel-Orbit, Incorporated
2331 Mill Road, Suite 600
Alexandria, VA 22314, U.S.A.
www.questel.com

Questel Project Number: AAB2430009UT-L_Q
Date: 2nd, August 2024

To whom it may concern:

I, Chris Yien, a translator fluent in the Simplified Chinese and English languages, on behalf of Questel, do solemnly and sincerely declare that the following is, to the best of my knowledge and belief, a true and correct translation of the document(s) listed below in a form that best reflects the intention and meaning of the original text.

I hereby declare that all statements made herein of my own knowledge are true and that all statements made on information and belief are believed to be true. I further declare that these statements were made with the knowledge that willful false statements and the like so made are punishable by fine or imprisonment, or both, under Section 1001 of Title 18 of the United States Code.

Original Document Identifier:	Pegasus_PriorArt_0010296-Pegasus_PriorArt_0010349.pdf
Translated Document Identifier:	WO2017024554A1 _en-US.docx

Signed this 2nd day of August, 2024

Signature

Chris Yien

Name