US011477108B2

(12) **United States Patent**
Chow et al.

(10) **Patent No.: US 11,477,108 B2**
(45) **Date of Patent: *Oct. 18, 2022**

(54) **SYSTEMS AND METHODS FOR JOINTLY OPTIMIZING WAN AND LAN NETWORK COMMUNICATIONS**

(71) Applicant: **ASSIA SPE, LLC**, Wilmington, DE (US)

(72) Inventors: **Peter Chow**, Los Altos, CA (US); **Wonjong Rhee**, San Francisco, CA (US); **Ardavan Maleki Tehrani**, Atherton, CA (US); **Marc Goldburg**, Redwood City, CA (US)

(73) Assignee: **ASSIA SPE, LLC**, Wilmington, DE (US)

(*) Notice: Subject to any disclaimer, the term of this patent is extended or adjusted under 35 U.S.C. 154(b) by 173 days.

This patent is subject to a terminal disclaimer.

(21) Appl. No.: **16/926,696**

(22) Filed: **Jul. 11, 2020**

(65) **Prior Publication Data**

US 2020/0344145 A1 Oct. 29, 2020

Related U.S. Application Data

(63) Continuation of application No. 15/182,513, filed on Jun. 14, 2016, now Pat. No. 10,333,819, and a (Continued)

(51) **Int. Cl.**
H04L 12/24 (2006.01)
H04L 12/26 (2006.01)
(Continued)

(52) **U.S. Cl.**
CPC ***H04L 43/50*** (2013.01); ***H04L 41/083*** (2013.01); ***H04L 41/0896*** (2013.01);
(Continued)

(58) **Field of Classification Search**
None
See application file for complete search history.

(56) **References Cited**

U.S. PATENT DOCUMENTS

5,822,302 A * 10/1998 Scheetz H04L 41/06 714/25
8,533,687 B1 * 9/2013 Greifeneder G06F 11/3495 717/130

(Continued)

OTHER PUBLICATIONS

Notice of Allowance dated May 20, 2021 in related Canadian patent application No. 3,074,395, (1 pg).

Primary Examiner — Duc T Duong
(74) *Attorney, Agent, or Firm* — North Weber & Baugh LLP; Michael North

(57) **ABSTRACT**

Described are systems and methods for jointly optimizing Wide Area Network (WAN) and Local Area Network (LAN) network communications. In one embodiment, a management device communicatively interfaced with a WAN and a LAN includes a collection module to collect LAN information from the LAN and WAN information from the WAN; an analysis module to jointly analyze the collected WAN information and the collected LAN information to identify an operational condition; and an implementation nodule to initiate a management event responsive to the operational condition being identified. In one embodiment, the management event includes generating and transmitting a diagnostics report responsive to a fault being identified. The management device may further generate and execute instructions to remedy the diagnosed fault.

20 Claims, 9 Drawing Sheets

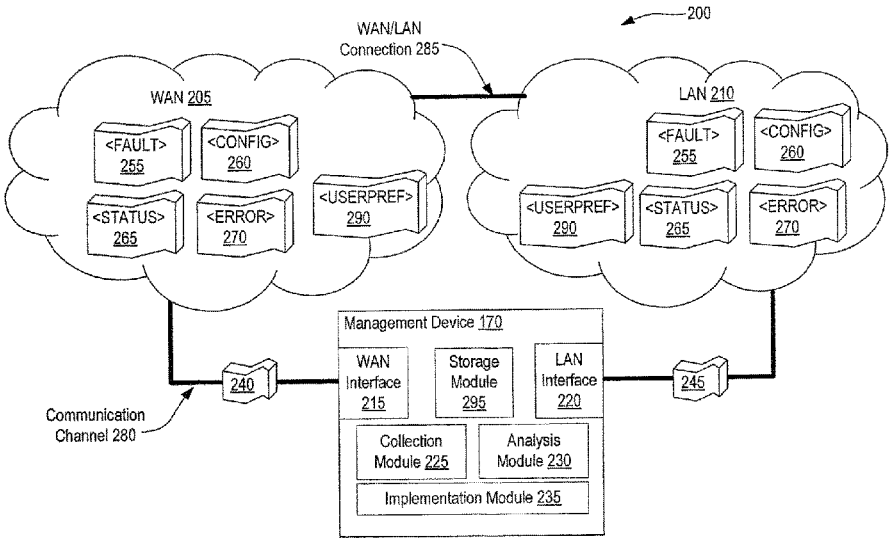

Related U.S. Application Data

continuation of application No. 16/432,364, filed on Jun. 5, 2019, now Pat. No. 10,757,003, which is a continuation of application No. 15/182,513, filed on Jun. 4, 2016, now Pat. No. 10,333,819, which is a continuation of application No. 13/995,900, filed as application No. PCT/US2011/021003 on Jan. 12, 2011, now Pat. No. 9,369,370.

(51) **Int. Cl.**

H04L 43/50	(2022.01)
H04L 41/083	(2022.01)
H04L 41/0896	(2022.01)
H04L 41/00	(2022.01)
H04L 43/0829	(2022.01)
H04L 43/0888	(2022.01)
H04L 43/16	(2022.01)

(52) **U.S. Cl.**

CPC ***H04L 41/26*** (2013.01); ***H04L 43/0829*** (2013.01); ***H04L 43/0888*** (2013.01); *H04L 43/16* (2013.01); *Y04S 40/00* (2013.01); *Y04S 40/12* (2013.01); *Y04S 40/128* (2013.01)

(56) **References Cited**

U.S. PATENT DOCUMENTS

2006/0259583 A1* 11/2006 Matsuura H04L 29/12481 709/218
2008/0013554 A1* 1/2008 Motegi H04L 61/2564 370/401
2008/0089237 A1* 4/2008 Molen H04L 47/10 370/252
2009/0028181 A1* 1/2009 Shimon H04L 65/1053 370/466

* cited by examiner

FIG. 1

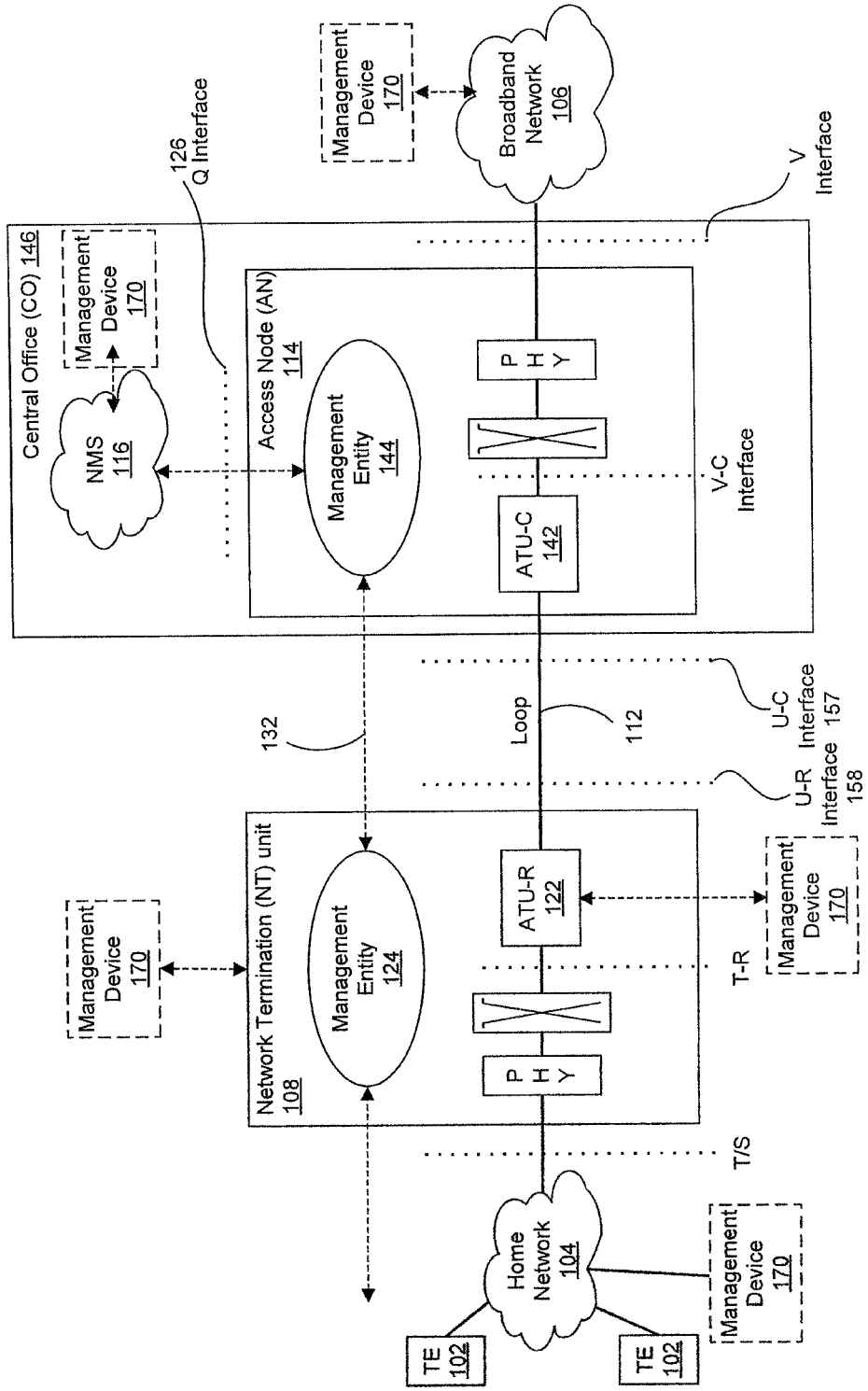
100
Central Office (CO) 146
Management Device 170
NMS 116
126 Q Interface
Access Node (AN) 114
Management Entity 144
ATU-C 142
P H Y
V-C Interface
Management Device 170
Broadband Network 106
V Interface
132
Loop
112
U-C Interface 157
U-R Interface 158
Management Device 170
Network Termination (NT) unit 108
Management Entity 124
ATU-R 122
P H Y
T-R
Management Device 170
T/S
Home Network 104
TE 102
TE 102
Management Device 170

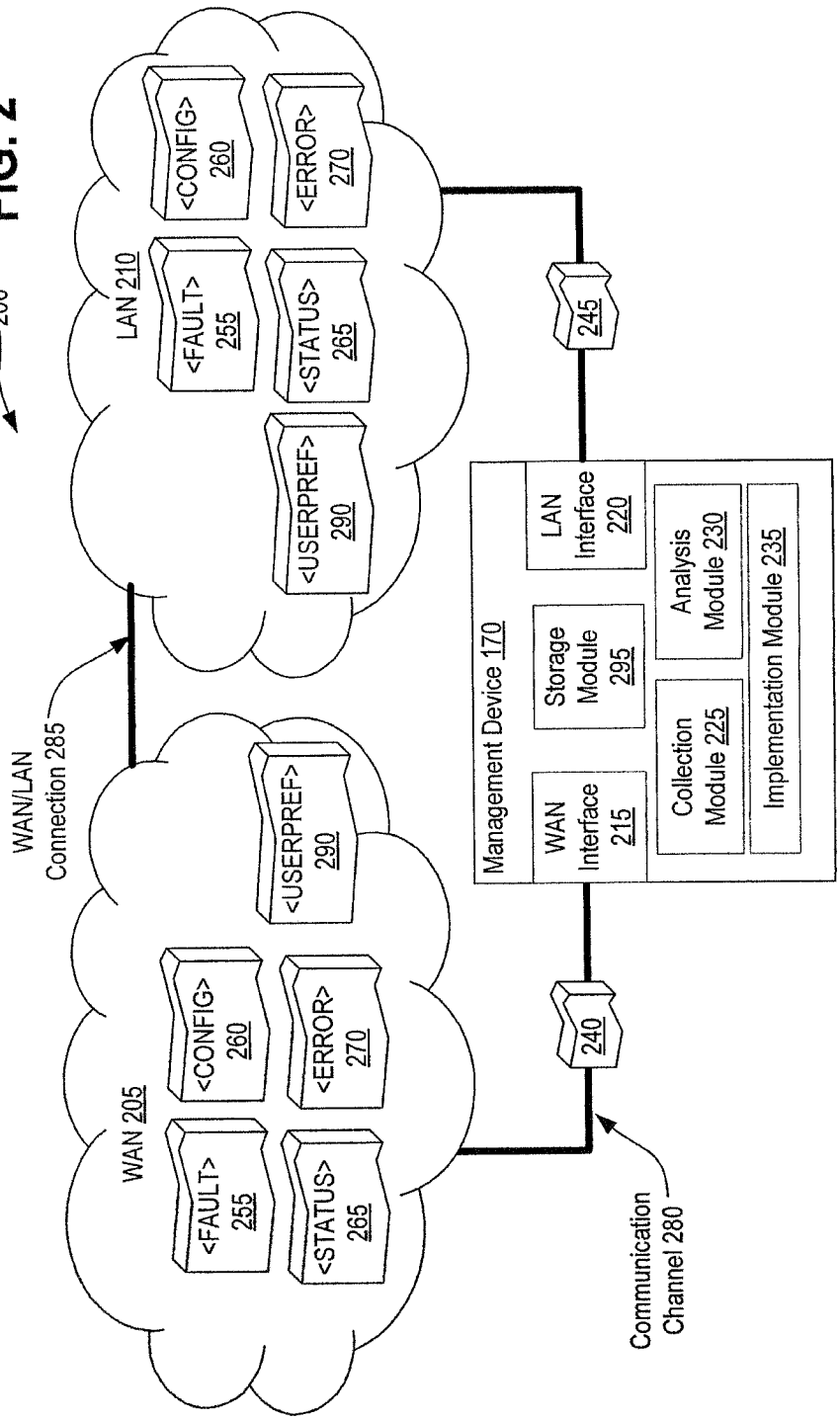
200
LAN 210
<CONFIG> 260
<ERROR> 270
<FAULT> 255
<STATUS> 265
<USERPREF> 290
WAN/LAN Connection 285
WAN 205
<USERPREF> 290
<CONFIG> 260
<ERROR> 270
<FAULT> 255
<STATUS> 265
245
240
Management Device 170
LAN Interface 220
Storage Module 295
Analysis Module 230
WAN Interface 215
Collection Module 225
Implementation Module 235
Communication Channel 280

FIG. 2

FIG. 3

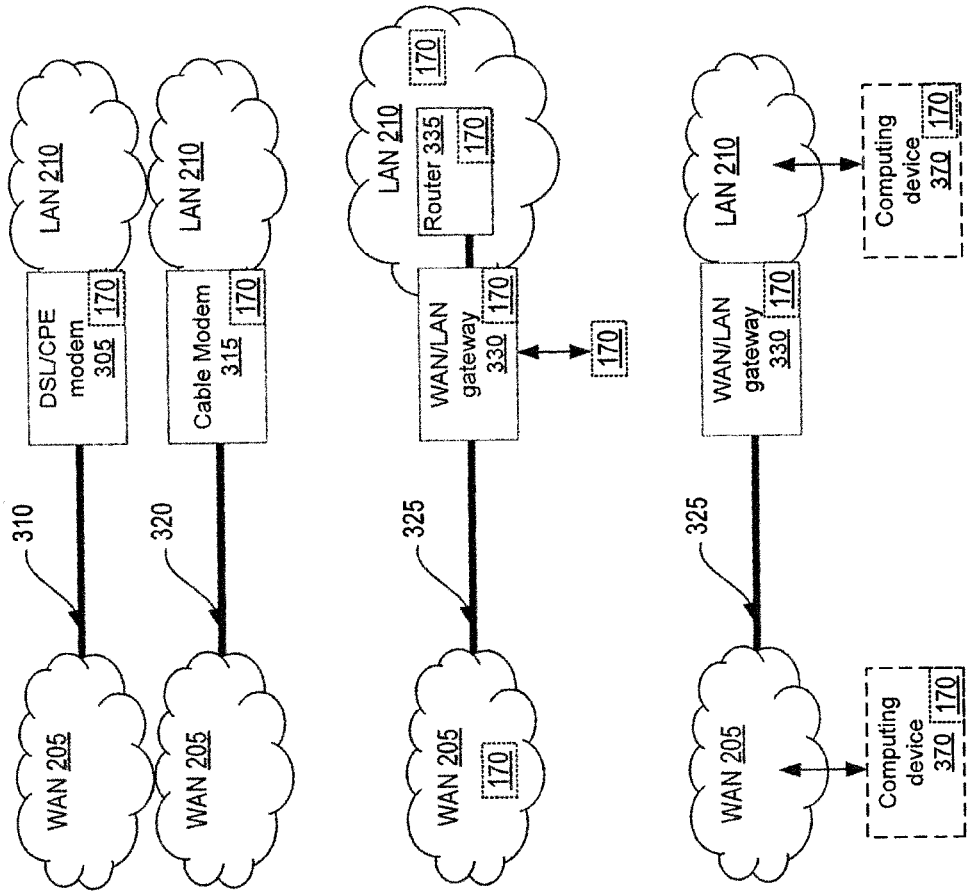
300
LAN 210
DSL/CPE modem 305
170
310
WAN 205
LAN 210
Cable Modem 315
170
320
WAN 205
LAN 210
Router 335
170
170
WAN/LAN gateway 330
170
170
325
WAN 205
170
LAN 210
WAN/LAN gateway 330
170
Computing device 370
170
325
WAN 205
Computing device 370
170

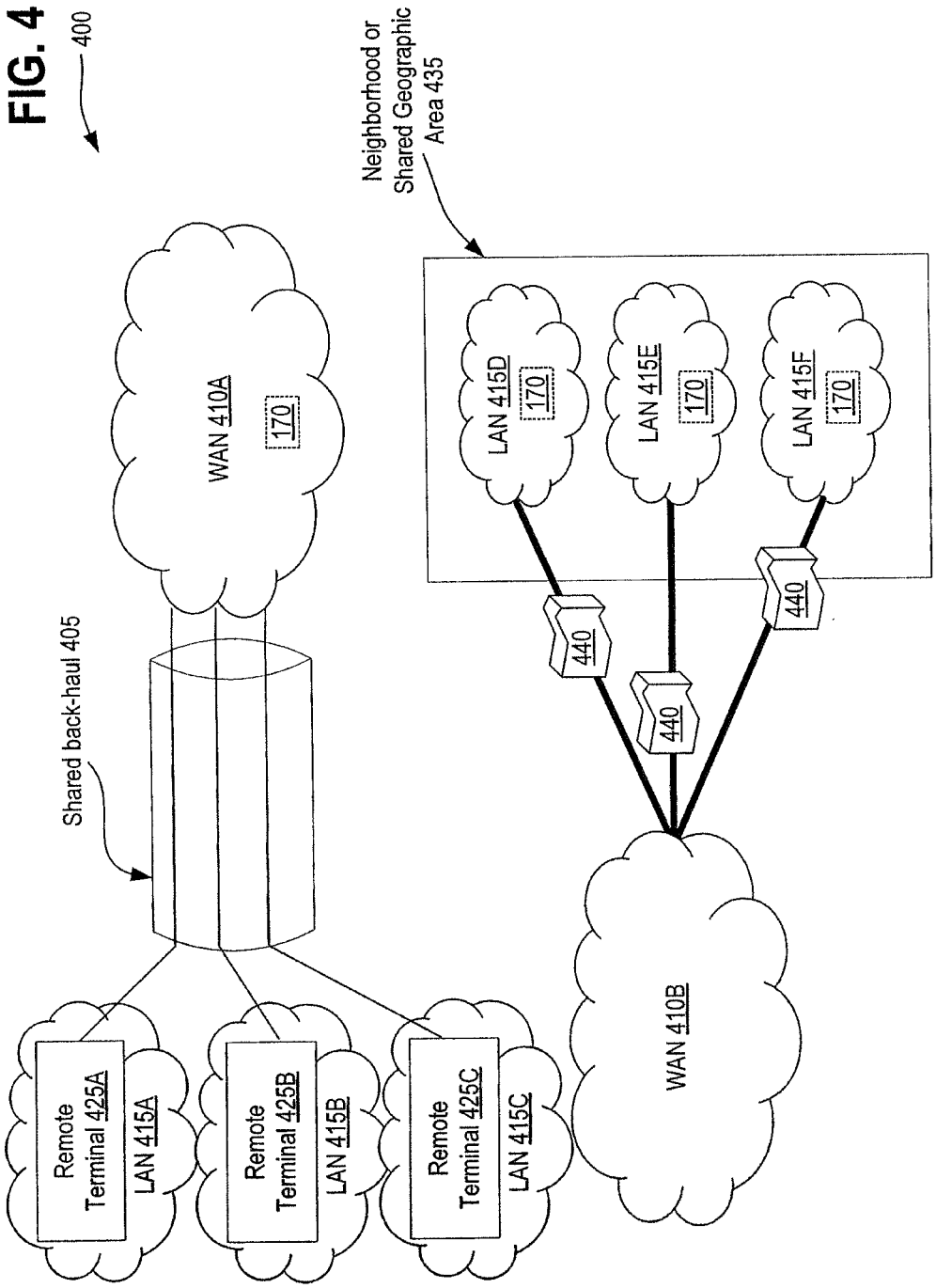
400
Neighborhood or Shared Geographic Area 435
WAN 410A
170
LAN 415D
170
LAN 415E
170
LAN 415F
170
440
440
440
Shared back-haul 405
WAN 410B
Remote Terminal 425A
LAN 415A
Remote Terminal 425B
LAN 415B
Remote Terminal 425C
LAN 415C

FIG. 4

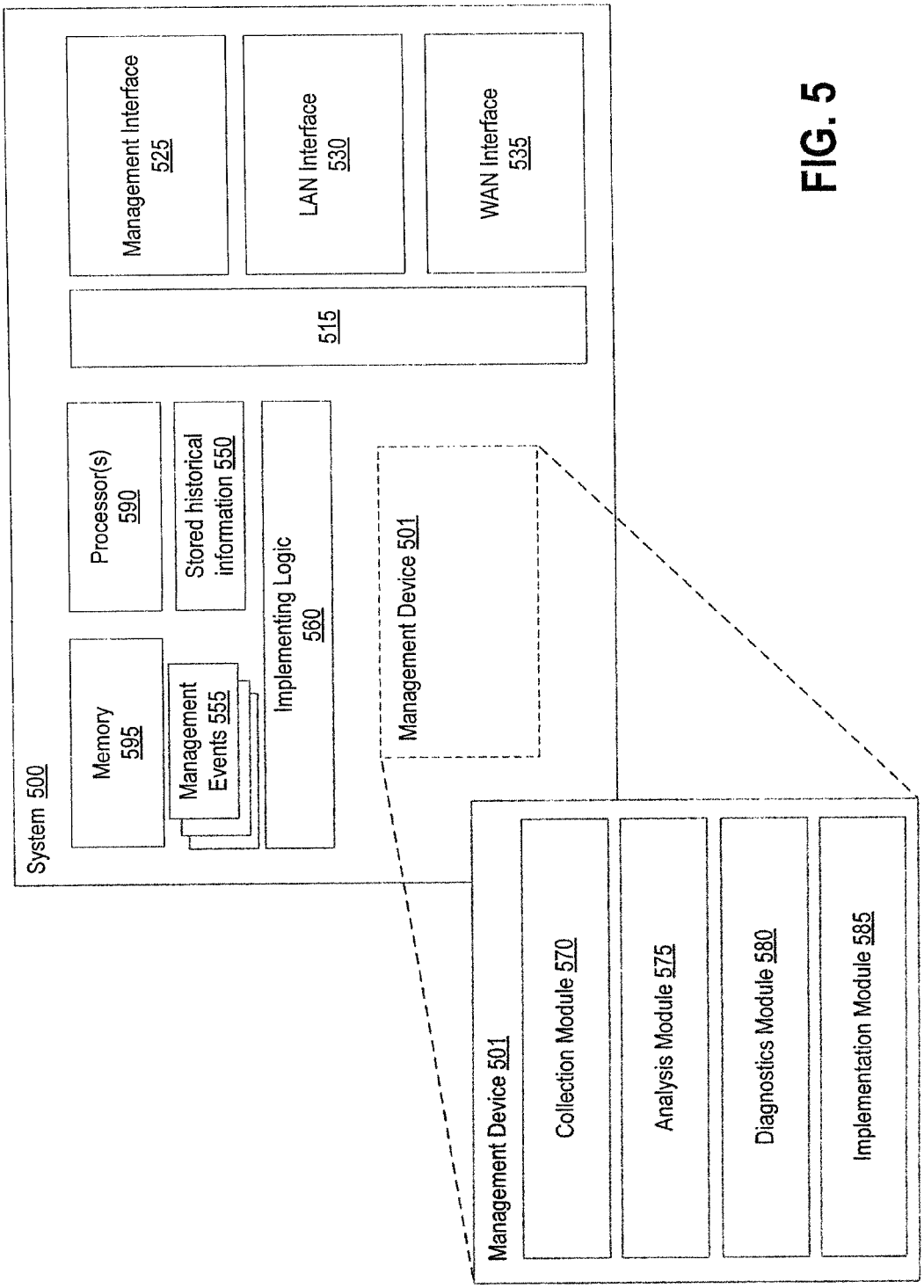
System 500
Memory 595
Management Events 555
Processor(s) 590
Stored historical information 550
Implementing Logic 560
Management Interface 525
515
LAN Interface 530
WAN Interface 535
Management Device 501
Management Device 501
Collection Module 570
Analysis Module 575
Diagnostics Module 580
Implementation Module 585

FIG. 5

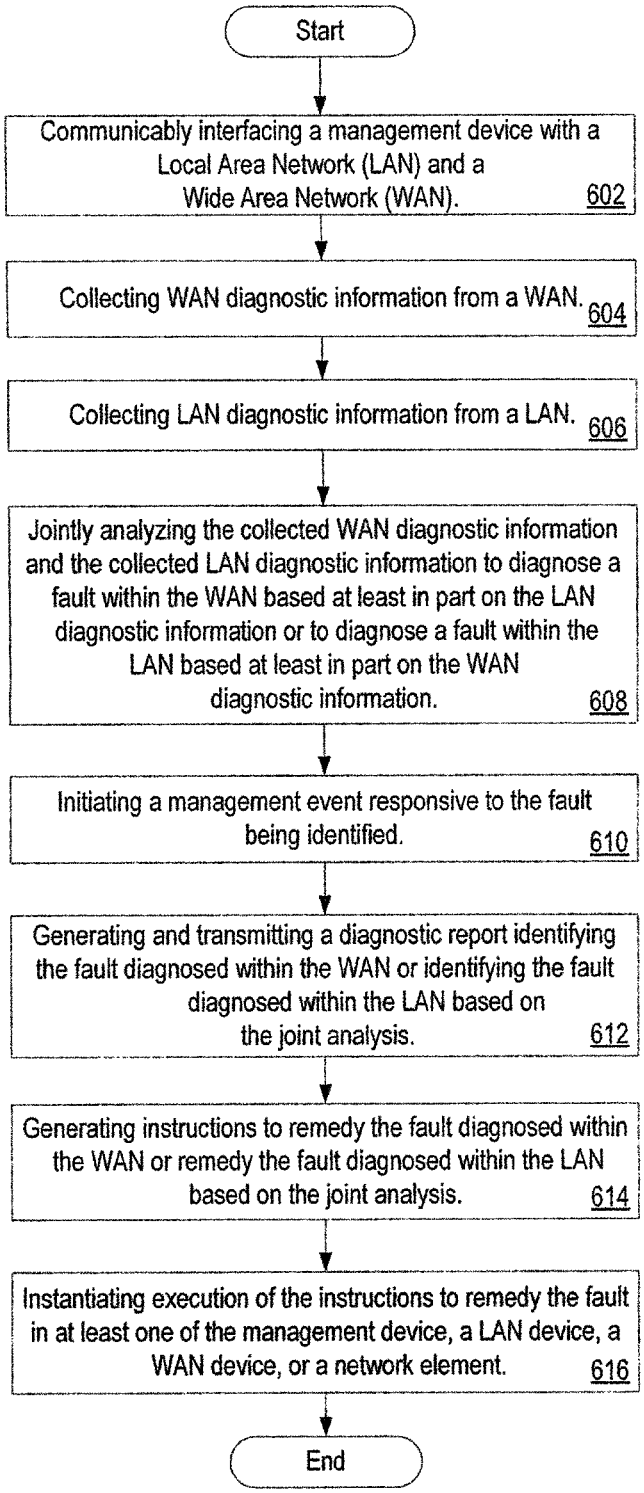
Start
Communicably interfacing a management device with a Local Area Network (LAN) and a Wide Area Network (WAN). 602
Collecting WAN diagnostic information from a WAN. 604
Collecting LAN diagnostic information from a LAN. 606
Jointly analyzing the collected WAN diagnostic information and the collected LAN diagnostic information to diagnose a fault within the WAN based at least in part on the LAN diagnostic information or to diagnose a fault within the LAN based at least in part on the WAN diagnostic information. 608
Initiating a management event responsive to the fault being identified. 610
Generating and transmitting a diagnostic report identifying the fault diagnosed within the WAN or identifying the fault diagnosed within the LAN based on the joint analysis. 612
Generating instructions to remedy the fault diagnosed within the WAN or remedy the fault diagnosed within the LAN based on the joint analysis. 614
Instantiating execution of the instructions to remedy the fault in at least one of the management device, a LAN device, a WAN device, or a network element. 616
End

FIG. 6A

600A

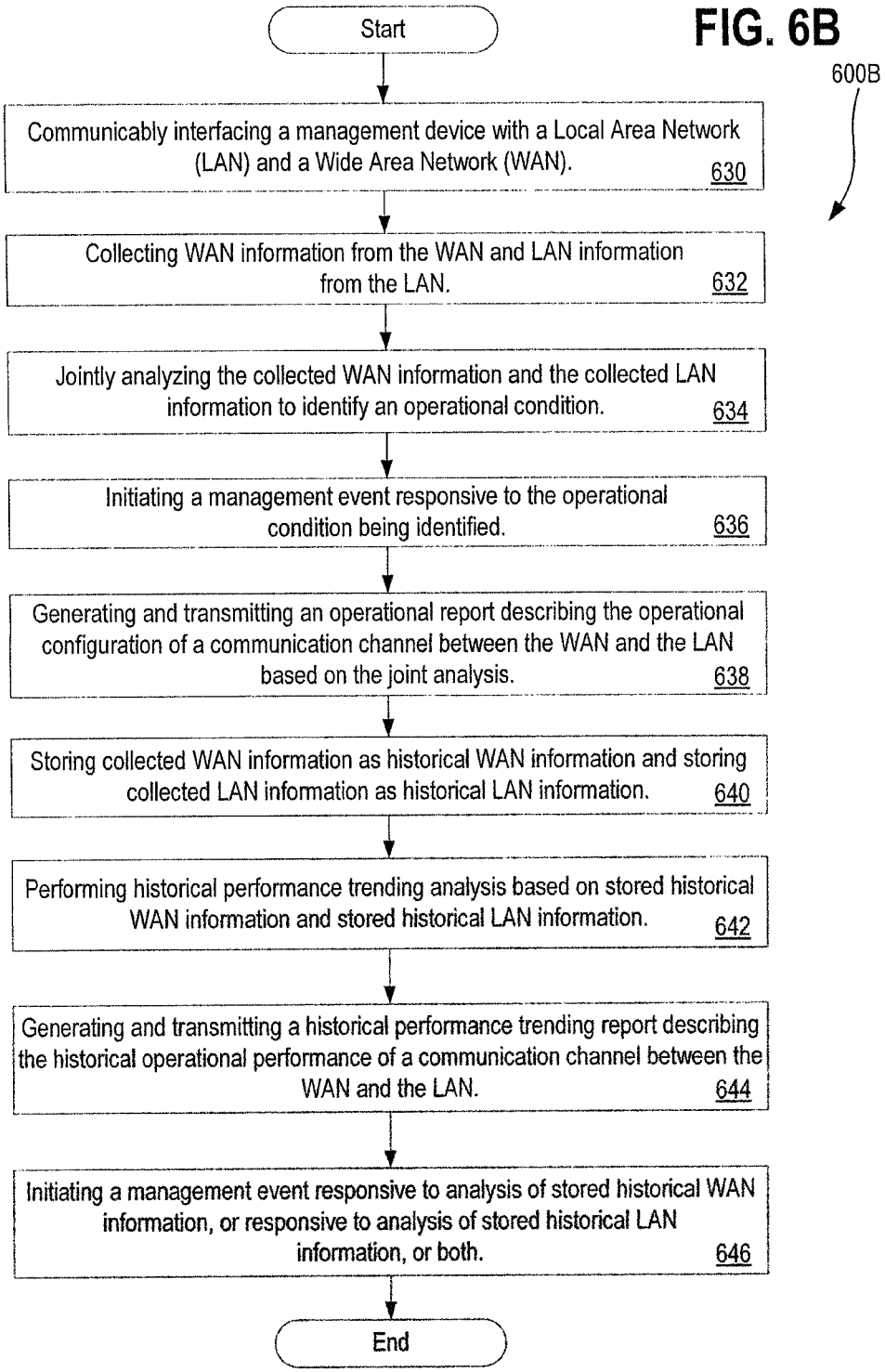
FIG. 6B
600B
Start
Communicably interfacing a management device with a Local Area Network (LAN) and a Wide Area Network (WAN). 630
Collecting WAN information from the WAN and LAN information from the LAN. 632
Jointly analyzing the collected WAN information and the collected LAN information to identify an operational condition. 634
Initiating a management event responsive to the operational condition being identified. 636
Generating and transmitting an operational report describing the operational configuration of a communication channel between the WAN and the LAN based on the joint analysis. 638
Storing collected WAN information as historical WAN information and storing collected LAN information as historical LAN information. 640
Performing historical performance trending analysis based on stored historical WAN information and stored historical LAN information. 642
Generating and transmitting a historical performance trending report describing the historical operational performance of a communication channel between the WAN and the LAN. 644
Initiating a management event responsive to analysis of stored historical WAN information, or responsive to analysis of stored historical LAN information, or both. 646
End

FIG. 6C

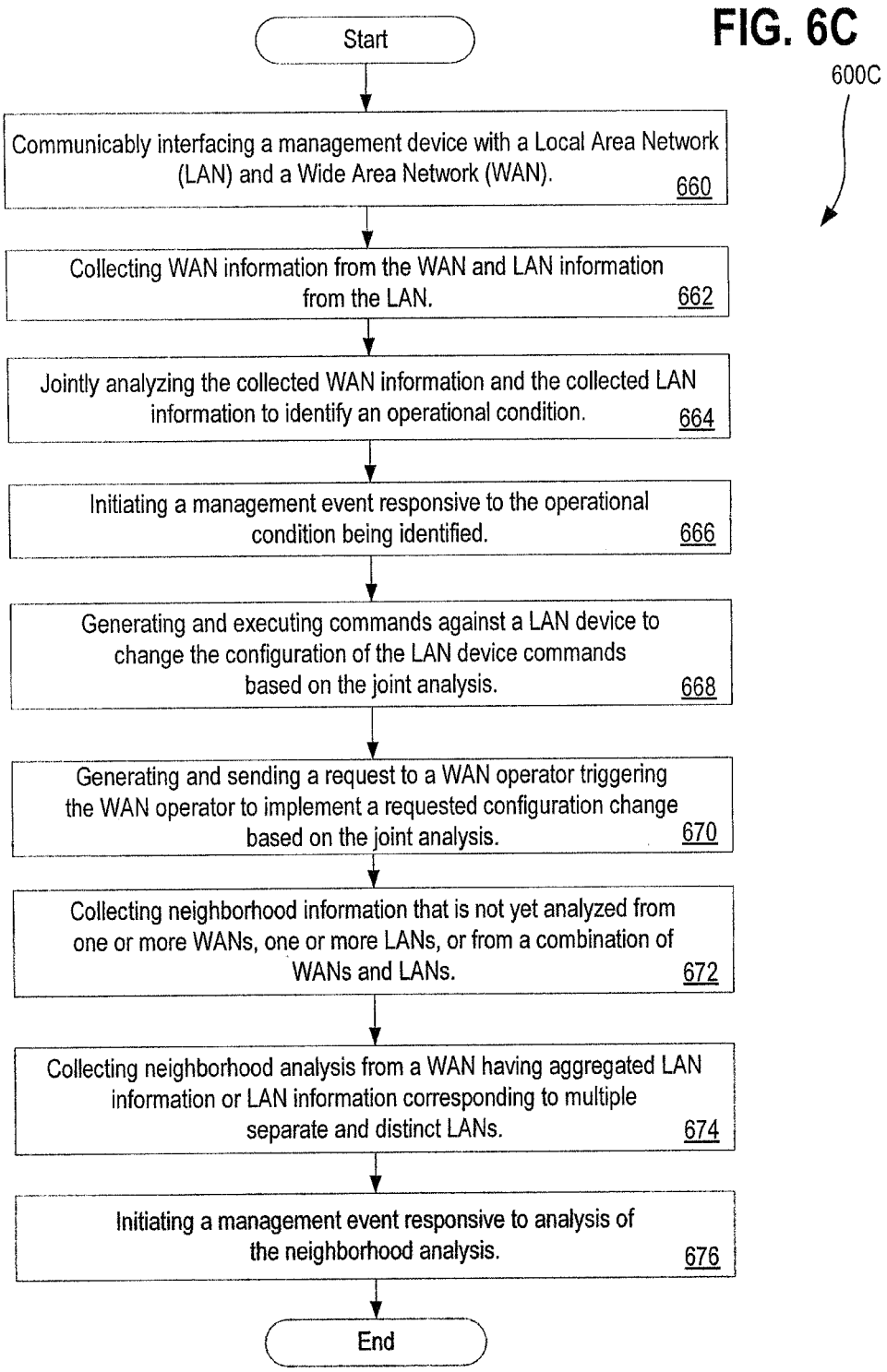
600C
Start
Communicably interfacing a management device with a Local Area Network (LAN) and a Wide Area Network (WAN). 660
Collecting WAN information from the WAN and LAN information from the LAN. 662
Jointly analyzing the collected WAN information and the collected LAN information to identify an operational condition. 664
Initiating a management event responsive to the operational condition being identified. 666
Generating and executing commands against a LAN device to change the configuration of the LAN device commands based on the joint analysis. 668
Generating and sending a request to a WAN operator triggering the WAN operator to implement a requested configuration change based on the joint analysis. 670
Collecting neighborhood information that is not yet analyzed from one or more WANs, one or more LANs, or from a combination of WANs and LANs. 672
Collecting neighborhood analysis from a WAN having aggregated LAN information or LAN information corresponding to multiple separate and distinct LANs. 674
Initiating a management event responsive to analysis of the neighborhood analysis. 676
End

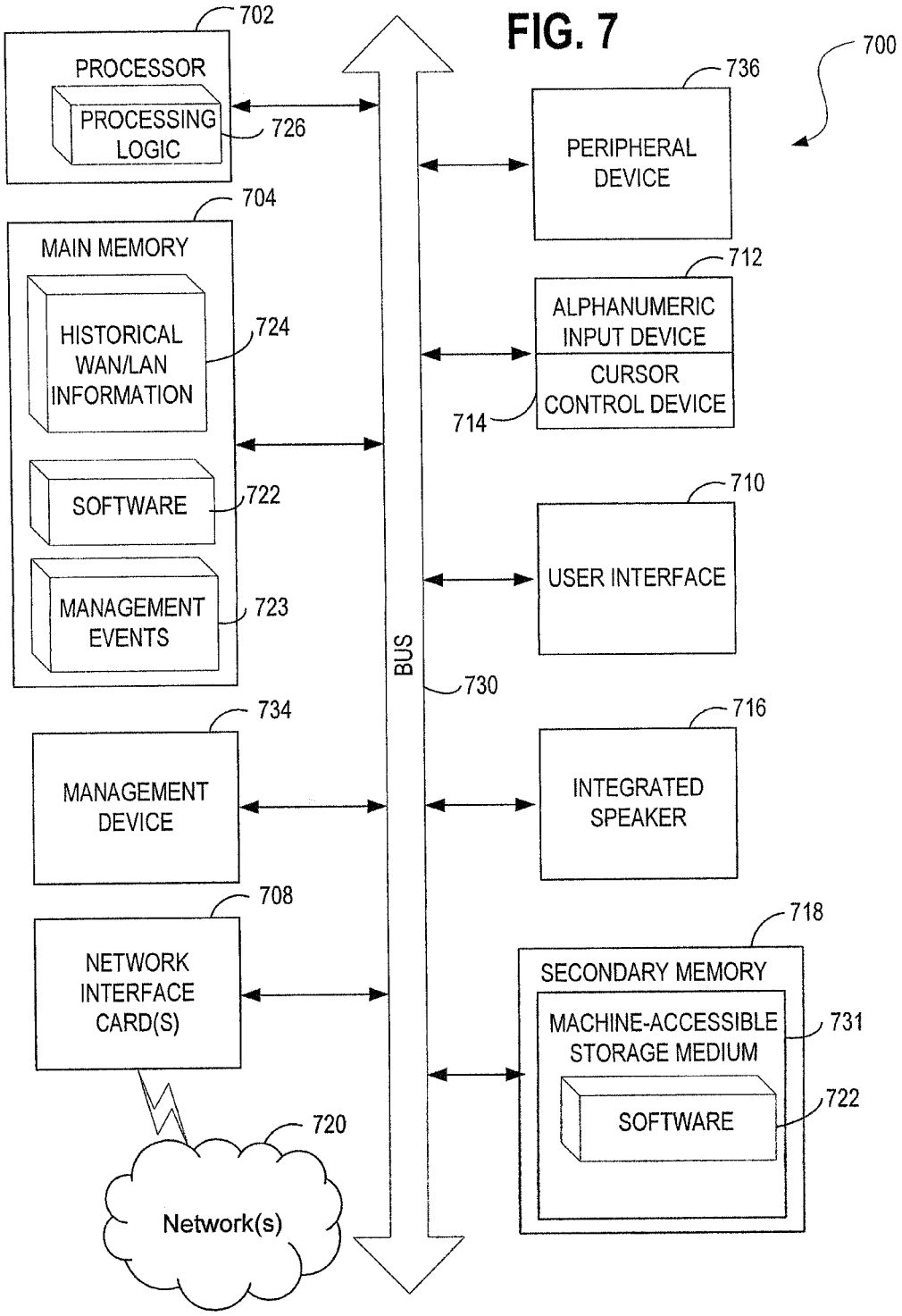
FIG. 7
700
702
PROCESSOR
PROCESSING LOGIC
726
704
MAIN MEMORY
HISTORICAL WAN/LAN INFORMATION
724
SOFTWARE
722
MANAGEMENT EVENTS
723
734
MANAGEMENT DEVICE
708
NETWORK INTERFACE CARD(S)
720
Network(s)
BUS
730
736
PERIPHERAL DEVICE
712
ALPHANUMERIC INPUT DEVICE
CURSOR CONTROL DEVICE
714
710
USER INTERFACE
716
INTEGRATED SPEAKER
718
SECONDARY MEMORY
MACHINE-ACCESSIBLE STORAGE MEDIUM
731
SOFTWARE
722

SYSTEMS AND METHODS FOR JOINTLY OPTIMIZING WAN AND LAN NETWORK COMMUNICATIONS

CROSS REFERENCE TO RELATED APPLICATION

This application is a continuation of and claims priority to U.S. patent application Ser. No. 16/432,364, filed on 5 Jun. 2019, and titled "SYSTEMS AND METHODS FOR JOINTLY OPTIMIZING WAN AND LAN NETWORK COMMUNICATIONS", which is a continuation of U.S. patent application Ser. No. 15/182,513, filed on 14 Jun. 2016, and titled "SYSTEMS AND METHODS FOR JOINTLY OPTIMIZING WAN AND LAN NETWORK COMMUNICATIONS", which is a continuation of U.S. patent application Ser. No. 13/995,900, filed on 8 Jul. 2014, titled "SYSTEMS AND METHODS FOR JOINTLY OPTIMIZING WAN AND LAN NETWORK COMMUNICATIONS," which claims priority to PCT Patent Application Serial No. PCT/US2011/021003, filed on 12 Jan. 2011, titled "SYSTEMS AND METHODS FOR JOINTLY OPTIMIZING WAN AND LAN NETWORK COMMUNICATIONS," all of which are incorporated herein by reference in their entirety for all purposes.

COPYRIGHT NOTICE

A portion of the disclosure of this patent document contains material which is subject to copyright protection. The copyright owner has no objection to the facsimile reproduction by anyone of the patent document or the patent disclosure, as it appears in the Patent and Trademark Office patent file or records, but otherwise reserves all copyright rights whatsoever.

A. Technical Field

The subject matter described herein relates generally to the field of computing, and more particularly, to systems and methods for jointly optimizing WAN and LAN network communications.

B. Background of the Invention

The subject matter discussed in the background section should not be assumed to be prior art merely as a result of its mention in the background section. Similarly, a problem mentioned in the background section or associated with the subject matter of the background section should not be assumed to have been previously recognized in the prior art. The subject matter in the background section merely represents different approaches, which in and of themselves may also correspond to embodiments of the claimed subject matter.

A Wide Area Network (WAN) provides interconnectivity amongst many diverse networks. The "Internet" is a Wide Area Network that joins together many other networks, providing a communications path between devices operating within distinct and often geographically dispersed networks. A Local Area Network (LAN) enables multiple distinct devices within an end-user's premises to communicate amongst themselves locally. An end-user's LAN is often connected to the Internet via a WAN back-haul connection to an Internet Service Provider (ISP) that provides the end-user consumer with Internet connectivity and Internet Bandwidth. Devices within the end-user's LAN may communicate with devices external to the LAN over the WAN back-haul connection provided by the end-user's ISP.

Traditionally, the WAN is controlled, managed and maintained by service providers, such as Internet Service Providers, Telecommunications Operators, etc. Conversely, a LAN is typically managed and maintained at a customer's premises by end users/customers, which may be residential users or commercial/business customers. Moreover, operators and service providers typically refrain from addressing any LAN related problems, notwithstanding the fact that, at times, some problems and issues exhibited via the LAN may be related to WAN configurations and settings. Correspondingly, some problems and issues exhibited via the WAN may be related to configurations, settings or problems on the LAN side. Furthermore, the WAN might be operated by a reseller, which does not have access to all management functionalities (such as monitoring, provisioning, control) to which the owner or the wholesaler of the WAN system may have access. Access to such functionalities may be achieved by the embodiments described herein. Moreover, the means of control, monitoring and provisioning, as well as control channels on the two networks, WAN and LAN, are typically distinct and separate, even when the WAN and the LAN are interconnected.

The present state of the art may benefit from systems and methods for jointly monitoring, provisioning and optimizing WAN and LAN network communications which are described herein.

BRIEF DESCRIPTION OF THE DRAWINGS

Embodiments are illustrated by way of example, and not by way of limitation, and can be more fully understood with reference to the following detailed description when considered in connection with the figures in which:

FIG. **1** illustrates an exemplary architecture in which embodiments may operate;

FIG. **2** illustrates an alternative exemplary architecture in which embodiments may operate;

FIG. **3** illustrates an alternative exemplary architecture in which embodiments may operate;

FIG. **4** illustrates an alternative exemplary architecture in which embodiments may operate;

FIG. **5** shows a diagrammatic representation of a system in which embodiments may operate, be installed, integrated, or configured;

FIGS. **6**A, **6**B, and **6**C are flow diagrams illustrating methods for jointly optimizing WAN and LAN network communications in accordance with described embodiments; and

FIG. **7** illustrates a diagrammatic representation of a machine in the exemplary form of a computer system, in accordance with one embodiment.

DETAILED DESCRIPTION

Described herein are systems and methods for jointly optimizing WAN and LAN network communications. In accordance with embodiments described herein, end-user consumers, including residential consumers and business consumers, may connect to the Internet by way of a Wide Area Network (WAN) back-haul connection to an Internet Service Provider (ISP). Such Internet Service Providers may include a Digital Subscriber Line (DSL) internet service provider which provides its subscribing end-users with Internet bandwidth at least partially over copper twisted pair telephone lines, such as that conventionally utilized to carry

analog telephone service (e.g., Plain Old Telephone Service (POTS); a coaxial cable internet service provider which provides end-users with Internet bandwidth at least partially over coaxial cable, such as that conventionally utilized to carry "cable" television signals; or a fiber optics internet service provider which provides end-users with Internet bandwidth at over fiber optic cable that terminates at a customer's premises. Other variants exist as well, such as ISPs that provide Internet bandwidth as an analog signal over an analog telephone based connection, ISPs that provide Internet bandwidth over a one-way or two-way satellite connection, and ISPs that provide Internet bandwidth at least partially over power lines, such as power lines conventionally utilized to transmit utility power (e.g., electricity) to an end-user's premises, or ISPs that provide Internet bandwidth at least partially over wireless channels, such as WiFi connectivity at hotspots, or mobile data connectivity via technologies and standards such as WiMax, 3G/4G, LTE, etc.

At an end-user's premises, Internet bandwidth provided via a WAN back-haul connection to an ISP is commonly distributed amongst multiple devices within the end-user's premises via a Local Area Network (LAN), which may be established via a LAN device. Distribution of the Internet Bandwidth provided via the WAN back-haul may further extend to an area around an end-user's premises, such as to an area outside a home, to a space or area outside of or around a business in which the Internet Bandwidth is accessible via the end-user's LAN wirelessly. At the end-user's premises, network traffic may be distributed within the LAN via wired connections or wireless connections, for example, over coaxial wiring, electrical wiring, twisted-pair telephone wiring, variants of Ethernet/Category-5 type wiring, and various types of wireless radio signals using licensed and unlicensed spectrum and various protocols.

Some network traffic associated with the end-user's premises remains local to the LAN, while other traffic destined for locations external to the LAN traverse the LAN onto the WAN interface and onto the Internet via the WAN backhaul.

Besides network traffic traversing the WAN and LAN networks and interfaces, various types of information are available, retrievable, or observable from each of the distinct WAN and LAN networks. The management device described herein collects information collected from the WAN and LAN networks via respective WAN and LAN interfaces to such networks, jointly analyzes the collected WAN information and the collected LAN information to identify an operational condition, and initiates a management event responsive to the operational condition being identified. For example, in some embodiments, the operational condition identified corresponds to a fault within the LAN which is identified based at least in part on the collected WAN information or alternatively, a fault within the WAN which is identified based at least in part on the collected LAN information. In some embodiments, the management event initiated responsive to the operational condition being identified may include generating and transmitting a diagnostic report, conducting additional diagnostics and/or analysis, issuing probes to trigger the output and collection of output from connected devices, such as a LAN device, WAN device, or a network element connected with the management device. In some embodiments, the management device generates and implements instructions responsive to the operational condition being identified, such as corrective actions to remedy a fault or instructions to trigger the adoption of a new device configuration. Network elements and networked devices may include one or more devices such as network gateways, DSL/CPE modems, Cable modems, WAN/LAN gateways, ONT devices, or any other network device which is communicatively interfaced with the WAN or LAN.

Using the systems and methodologies described herein, a management device having access and authority to collect information from a WAN connected network and also a LAN connected network is capable of collecting and jointly analyzing information from the WAN and LAN networks to jointly optimize WAN and LAN network communications.

In the following description, numerous specific details are set forth such as examples of specific systems, languages, components, etc., in order to provide a thorough understanding of the various embodiments. It will be apparent, however, to one skilled in the art that these specific details need not be employed to practice the disclosed embodiments. In other instances, well known materials or methods have not been described in detail in order to avoid unnecessarily obscuring the disclosed embodiments.

In addition to various hardware components depicted in the figures and described herein, embodiments further include various operations which are described below. The operations described in accordance with such embodiments may be performed by hardware components or may be embodied in machine-executable instructions, which may be used to cause a general-purpose or special-purpose processor programmed with the instructions to perform the operations. Alternatively, the operations may be performed by a combination of hardware and software, including software instructions that perform the operations described herein via memory and one or more processors of a computing platform.

Embodiments also relate to a system or apparatus for performing the operations herein. The disclosed system or apparatus may be specially constructed for the required purposes, or it may comprise a general purpose computer selectively activated or reconfigured by a computer program stored in the computer. Such a computer program may be stored in a non-transitory computer readable storage medium, such as, but not limited to, any type of disk including floppy disks, optical disks, CD-ROMs, and magnetic-optical disks, read-only memories (ROMs), random access memories (RAMs), EPROMs, EEPROMs, magnetic or optical cards, or any type of media suitable for storing non-transitory electronic instructions, each coupled to a computer system bus. In one embodiment, a non-transitory computer readable storage medium having instructions stored thereon, causes one or more processors within a Management Device to perform the methods and operations which are described herein. In another embodiment, the instructions to perform such methods and operations are stored upon a non-transitory computer readable medium for later execution.

The algorithms and displays presented herein are not inherently related to any particular computer or other apparatus nor are embodiments described with reference to any particular programming language. It will be appreciated that a variety of programming languages may be used to implement the teachings of the embodiments as described herein.

FIG. **1** illustrates an exemplary architecture **100** in which embodiments may operate in compliance with the G.997.1 standard (also known as G.ploam). Asymmetric Digital Subscriber Line (ADSL) systems (one form of Digital Subscriber Line (DSL) systems), which may or may not include splitters, operate in compliance with the various applicable standards such as ADSL1 (G.992.1), ADSL-Lite (G.992.2), ADSL2 (G.992.3), ADSL2-Lite G.992.4,

ADSL2+(G.992.5) and the G.993.x emerging Very-high-speed Digital Subscriber Line or Very high-bitrate Digital Subscriber Line (VDSL) standards, as well as the G.991.1 and G.991.2 Single-Pair High-speed Digital Subscriber Line (SHDSL) standards, all with and without bonding.

The G.997.1 standard specifies the physical layer management for ADSL transmission systems based on the clear, Embedded Operation Channel (EOC) defined in G.997.1 and use of indicator bits and EOC messages defined in G.992.x standards. Moreover, G.997.1 specifies network management elements content for configuration, fault and performance management. In performing these functions, the system utilizes a variety of operational data (which includes performance data) that is available at an Access Node (AN).

In FIG. **1**, users terminal equipment **102** (e.g., a Customer Premises Equipment (CPE) device or a remote terminal device) is coupled to a home network **104**, which in turn is coupled to a Network Termination (NT) Unit **108**. ADSL Transceiver Units (ATU) are further depicted (e.g., a device that provides ADSL modulation of a DSL loop or line). In one embodiment, NT unit **108** includes an ATU-R (ATU Remote), **122** (for example, a transceiver defined by one of the ADSL standards) or any other suitable network termination modem, transceiver or other communication unit. NT unit **108** also includes a Management Entity (ME) **124**. Management Entity **124** can be any suitable hardware device, such as a microprocessor, microcontroller, or circuit state machine in firmware or hardware, capable of performing as required by any applicable standards and/or other criteria. Management Entity **124** collects and stores, among other things, operational data in its Management Information Base (MIB), which is a database of information maintained by each ME capable of being accessed via network management protocols such as Simple Network Management Protocol (SNMP), an administration protocol used to gather information from a network device to provide to an administrator console/program or via Transaction Language 1 (TL1) commands, TL1 being a long-established command language used to program responses and commands between telecommunication network elements. In one embodiment, Network Termination Unit **108** is communicably interfaced with a management device **170** as described herein. In another embodiment, ATU-R **122** is communicably interfaced with management device **170**.

Each ATU-R **122** in a system may be coupled with an ATU-C (ATU Central) in a Central Office (CO) or other central location. ATU-C **142** is located at an Access Node (AN) **114** in Central Office **146**. A Management Entity **144** likewise maintains an MIB of operational data pertaining to ATU-C **142**. The Access Node **114** may be coupled to a broadband network **106** or other network, as will be appreciated by those skilled in the art. ATU-R **122** and ATU-C **142** are coupled together by a loop **112**, which in the case of ADSL may be a twisted pair line, such as a telephone line, which may carry other communication services besides DSL based communications. Either management entity **124** or management entity **144** may implement and incorporate a management device **170** as described herein. Management entity **124** or management entity **144** may further store collected WAN information and collected LAN information within an associated MIB.

Several of the interfaces shown in FIG. **1** are used for determining and collecting operational data. The Q interface **126** provides the interface between the Network Management System (NMS) **116** of the operator and ME **144** in Access Node **114**. Parameters specified in the G.997.1 standard apply at the Q interface **126**. The near-end parameters supported in Management Entity **144** may be derived from ATU-C **142**, while far-end parameters from ATU-R **122** may be derived by either of two interfaces over the UA interface. Indicator bits and EOC messages may be sent using embedded channel **132** and provided at the Physical Medium Dependent (PMD) layer, and may be used to generate the required ATU-R **122** parameters in ME **144**. Alternately, the operations, Administration and Maintenance (OAM) channel and a suitable protocol may be used to retrieve the parameters from ATU-R **122** when requested by Management Entity **144**. Similarly, the far-end parameters from ATU-C **142** may be derived by either of two interfaces over the U-interface. Indicator bits and EOC message provided at the PMD layer may be used to generate the required ATU-C **142** parameters in Management Entity **124** of NT unit **108**. Alternately, the OAM channel and a suitable protocol may be used to retrieve the parameters from ATU-C **142** when requested by Management Entity **124**.

At the U interface (also referred to as loop **112**), there are two management interfaces, one at ATU-C **142** (the U-C interface **157**) and one at ATU-R **122** (the U-R interface **158**). Interface **157** provides ATU-C near-end parameters for ATU-R **122** to retrieve over the U interface/loop **112**. Similarly, U-R interface **158** provides ATU-R near-end parameters for ATU-C **142** to retrieve over the U interface/loop **112**. The parameters that apply may be dependent upon the transceiver standard being used (for example, G.992.1 or G.992.2). The G.997.1 standard specifies an optional Operation, Administration, and Maintenance (OAM) communication channel across the U interface. If this channel is implemented, ATU-C and ATU-R pairs may use it for transporting physical layer OAM messages. Thus, the ATU transceivers **122** and **142** of such a system share various operational data maintained in their respective MIB s.

Depicted within FIG. **1** is management device **170** operating at various locations in accordance with several alternative embodiments. For example, management device **170** is located within home network **104**, such as within a LAN. In an alternative embodiment, management device **170** is located at central office **146** and interfaced to home network **104** (e.g., a LAN) and broadband network **106** (e.g., a WAN) via NMS **116**. In yet another embodiment, management device **170** operates on the broadband network **106** (e.g., on the WAN or Internet).

As used herein, the terms "user," "subscriber," and/or "customer" refer to a person, business and/or organization to which communication services and/or equipment are and/or may potentially be provided by any of a variety of service provider(s). Further, the term "customer premises" refers to the location to which communication services are being provided by a service provider. For an example Public Switched Telephone Network (PSTN) used to provide DSL services, customer premises are located at, near and/or are associated with the network termination (NT) side of the telephone lines. Example customer premises include a residence or an office building.

As used herein, the term "service provider" refers to any of a variety of entities that provide, sell, provision, troubleshoot and/or maintain communication services and/or communication equipment. Example service providers include a telephone operating company, a cable operating company, a wireless operating company, an internet service provider, or any service that may independently or in conjunction with a broadband communications service provider offer services that diagnose or improve broadband communications services (DSL, DSL services, cable, etc.).

Additionally, as used herein, the term "DSL" refers to any of a variety and/or variant of DSL technology such as, for example, Asymmetric DSL (ADSL), High-speed DSL (HDSL), Symmetric DSL (SDSL), and/or Very high-speed/Very high-bit-rate DSL (VDSL). Such DSL technologies are commonly implemented in accordance with an applicable standard such as, for example, the International Telecommunications Union (I.T.U.) standard G.992.1 (a.k.a. G.dmt) for ADSL modems, the I.T.U. standard G.992.3 (a.k.a. G.dmt.bis, or G.ads12) for ADSL2 modems, I.T.U. standard G.992.5 (a.k.a. G.ads12plus) for ADSL2+ modems, I.T.U. standard G.993.1 (a.k.a. G.vds1) for VDSL modems, I.T.U. standard G.993.2 for VDSL2 modems, I.T.U. standard G.994.1 (G.hs) for modems implementing handshake, and/or the I.T.U. G.997.1 (a.k.a. G.ploam) standard for management of DSL modems.

References to connecting a DSL modem and/or a DSL communication service to a customer are made with respect to exemplary Digital Subscriber Line (DSL) equipment, DSL services, DSL systems and/or the use of ordinary twisted-pair copper telephone lines for distribution of DSL services, it should be understood that the disclosed methods and apparatus to characterize and/or test a transmission medium for communication systems disclosed herein may be applied to many other types and/or variety of communication equipment, services, technologies and/or systems. For example, other types of systems include wireless distribution systems, wired or cable distribution systems, coaxial cable distribution systems, Ultra High Frequency (UHF)/Very High Frequency (VHF) radio frequency systems, satellite or other extra-terrestrial systems, cellular distribution systems, power-line broadcast systems and/or fiber optic networks. Additionally, combinations of these devices, systems and/or networks may also be used. For example, a combination of twisted-pair and coaxial cable interfaced via a balun connector, or any other physical-channel-continuing combination such as an analog fiber to copper connection with linear optical-to-electrical connection at an Optical Network Unit (ONU) may be used.

The phrases "coupled to," "coupled with," connected to," "connected with" and the like are used herein to describe a connection between two elements and/or components and are intended to mean coupled/connected either directly together, or indirectly, for example via one or more intervening elements or via a wired/wireless connection. References to a "communication system" are intended, where applicable, to include reference to any other type of data transmission system.

FIG. **2** illustrates an alternative exemplary architecture **200** in which embodiments may operate. Architecture **200** depicts a Wide Area Network (WAN) **205** and Local Area Network (LAN) **210**, each communicatively interfaced with management device **170**. WAN **205** and LAN **210** are also communicatively interfaced with each other directly via WAN/LAN connection **285**, over which data may be communicated between WAN **205** and LAN **210** without having to engage or otherwise communicate with management device **170**. For example, management device **170** may carry out WAN/LAN optimizations and communicate with various networked devices in the WAN or in the LAN or both, without serving as an interfacing gateway or as the sole communication link between the LAN and the WAN.

In accordance with one embodiment, management device **170** includes a Wide Area Network (WAN) interface **215** to communicably interface the management device **170** with the WAN **205** and a Local Area Network (LAN) interface **220** to communicably interface the management device **170** with the LAN **210**. In one embodiment, management device **170** further includes a collection module **225** to collect LAN information **245** from the LAN **210** and to further collect WAN information **240** from the WAN **205**.

In one embodiment, management device **170** includes an analysis module **230** to jointly analyze the collected WAN information **240** and the collected LAN information **245** to identify an operational condition. In one embodiment, management device **170** further includes an implementation module **235** to initiate a management event responsive to the operational condition being identified.

In accordance with various embodiments, the operational condition identified based on the collected WAN information **240** and the collected LAN information **245** may represent a variety of observable, detectable, or determinable operational conditions associated with the LAN **210**, associated with the WAN **205**, associated with the devices within either the WAN or the LAN, or associated with the communication channel **280** related to the WAN and the LAN.

For example, FIG. **2** depicts various types of information that may be collected from the WAN and/or the LAN. In accordance with certain embodiments, the collected WAN information **240** and/or the collected LAN information **245** may include faults or fault codes **255**, configuration information **260**, status information **265**, and error information **270**. The collected information (**240** or **245**) may take the form of codes, statistics, counters, message strings, and so forth. Other information types or sources of collected WAN and/or LAN information include operational data; active configuration settings of the management device; active configuration settings of networked devices operating within the LAN; active configuration settings of WAN network elements communicatively interfaced with the management device; performance measurements, counters, and/or statistics; and diagnostic information.

WAN and or LAN information to be analyzed may further include historical margin performance of a WAN backhaul; historical performance data relating to a WAN modem; WAN modem retrain counts; WAN modem training data; WAN error metrics; LAN error metrics; WAN packet counts; LAN packet counts; LAN device resets; LAN transmit power levels; LAN transmit spectrums bands; LAN wireless transmission channels; LAN auto-select radio channels; LAN device Identifier; and LAN data collision counts.

Such information, data, and counters may correspond to a current configuration or status, or may instead correspond to historical data collected over a period of time. Thus, in accordance with one embodiment, the information analyzed to identify the operational condition includes historical WAN information or historical LAN information, or both. In accordance with one embodiment, historical WAN information and/or historical LAN information are stored within a storage module **295** of the management device **170**. In one embodiment, the analysis module **230** analyzes current WAN information **240**, current LAN information **245**, historical WAN information, and historical LAN information in the process of identifying the operational condition.

In one embodiment, an analysis module **230** performs historical performance trending analysis based on the historical WAN information and the historical LAN information. In such an embodiment, implementation module **235** generates and transmits a historical performance trending report describing the historical operational performance of a communication channel **280** related to the WAN **205** and the LAN **210**. In alternative embodiments, the historical performance trending reports describes the historical performance

of a LAN device or the historical performance of a WAN device. For example, such a historical performance trending report may describe the volume of data, average data rates, and traffic class for a computer operating within the LAN over a specified time period. Such information may be of interest to a business consumer reviewing its data usage and costs. Such information may be based on data collected from the WAN but provide LAN specific metrics. Similarly, information collected from the LAN may be utilized to provide WAN specific metrics or WAN based trending. For example, errors, retrains, failed connection requests, failed DNS (domain naming service) requests, and similar metrics available from the LAN may be utilized to provide quality trending metrics of the WAN based connectivity and traffic. Although failures may be exhibited and available from the LAN, many such failures may nevertheless be attributable to operational conditions (e.g., configurations, faults, congestion, etc.) within the WAN **205**.

In one embodiment, the collection module collects or estimates one or more user preferences. For example, the one or more user preferences may be determinable based on user preference information **290** collected from the WAN or the LAN. In such an embodiment, the analysis module **230** analyzes the one or more user preferences and the implementation module **235** responsively initiates a management event. For example, implementation module **235** may generate instructions to change the operational condition based at least in part on the one or more user preferences. Changing the operational condition may constitute modifying a configuration of a LAN device or a WAN device based on the user preferences, or requesting a WAN operator to alter the configuration of a communication channel **280** related to the WAN and the LAN.

The management device may collect information from various information sources within the WAN and/or LAN. For example, in one embodiment, a collection module **225** of the management device **170** collects information from one or more sources including: a Digital Subscriber Line (DSL) Customer Premises Equipment (CPE) modem; an in-home powerline device; a Home Phoneline Network Alliance (HPNA) based device; an in-home coax distribution device; a G.hn (Global Home Networking Standard) compatible device; an in-home metering communication device; an in-home appliance communicatively interfaced with the LAN; a wireless femtocell base-station; a wireless WiFi compatible base-station; a wireless mobile device repeater; a wireless mobile device base-station; a set-top box (STB)/set-top unit (STU) customer electronics device; an Internet Protocol (IP) enabled television; an IP enabled media player; an IP enabled gaming console; an Ethernet gateway; a computing device connected to the LAN; an Ethernet connected computer peripheral device; an Ethernet connected router; an Ethernet connected wireless bridge; an Ethernet connected network bridge; and an Ethernet connected network switch.

In some embodiments, the operational condition identified based on the collected WAN information **240** and the collected LAN information **245** may represent a fault diagnosed within the WAN **205** based on the collected LAN information **245** or a fault diagnosed within the LAN **210** based on the collected WAN information **240**. In such an embodiment, the implementation module **235** initiating a management event responsive to the operational condition being identified includes the implementation module to generate, provide or transmit a diagnostic report and/or information identifying the fault diagnosed within the WAN or the fault diagnosed within the LAN. Such information may be accessed or provided via the Internet, a webpage, a Graphic User Interface (GUI), or any other suitable communication means similar to the means used by the management device **170** to access information.

For example, a diagnostics report may be generated and sent to a WAN operator, such a DSL or Cable internet service provider. Similarly, a diagnostics report and/or information may be generated, provided or sent to an end-user; accessible or provided via the Internet, a webpage, a Graphic User Interface (GUI), etc. An end-user may benefit from a diagnostic report indicating that a device operating within the end-user's LAN is triggering a large number of malformed packets, such as packets with undeliverable destination addresses. In such an example, the WAN information **240** collected may include counter or statistics information for malformed network traffic packets attributable to a device operating within LAN **210**. Subsequent to analyzing the information collected from the WAN and the LAN, implementation module **235** may then generate a diagnostics report, provide or transmit the report to an end-user associated with LAN **210**, thus alerting the end-user to the problem. Such a report may similarly be of interest to an operator of the WAN **205**, notwithstanding the fact that the fault is attributable to a device operating upon LAN **210**. For example, the WAN operator may undertake to filter or block the malformed network traffic, or assist its consumer in identifying and rectifying the source of the malformed packets within the consumer's LAN so as to improve overall network efficiency.

In one embodiment, the implementation module **235** initiating the management event responsive to the operational condition being identified includes the implementation module **235** to generate instructions to remedy a fault diagnosed within the WAN or to generate instructions to remedy a fault diagnosed within the LAN based on the joint analysis, or both. For example, in one embodiment, initiating the management event responsive to the operational condition being identified comprises the implementation module to alter one or more of the following: Forward Error Correction (FEC) parameters, a DSL transmission rate, implement a higher INP (Impulse Noise Protection) parameter setting, a higher margin parameter setting, and/or higher power parameter settings.

In accordance with various embodiments, the operational condition identified based on the joint analysis may include one or more of: network congestion within the WAN; network congestion within the LAN; excess power consumption by communication elements within the LAN; excess power consumption by communication elements within the WAN; bandwidth utilization of the WAN in excess of a maximum threshold; bandwidth availability of the WAN below a minimum threshold; a security breach within the LAN which is determined by observing anomalies in data traffic; a network intrusion within the LAN; a fault on the WAN or the LAN; errors on the WAN or the LAN connection; usage patterns of the WAN or the LAN resources (e.g., bandwidth, power, etc.); bandwidth utilization on the WAN or the LAN; performance measures on the WAN or the LAN; and quality of the WAN or LAN connection, such as level of stability, rate sustainability, etc.

In some embodiments, the identified operational condition represents a configuration, such as an operational configuration of a communication channel **280** related to the WAN and the LAN based on the collected LAN information and the collected WAN information. In one embodiment, the implementation module **235** initiating the management event responsive to the operational condition being identi-

fied includes the implementation module **235** to generate and transmit an operational report describing the operational configuration of the communication channel **280** related to the WAN and the LAN. Such a configuration may describe the spectrum over which transceivers within the WAN and/or LAN are communicating, error correction policies or settings, latency policies or settings, data transfer speeds, transmit power levels, and so forth. Such an operational report may enable an end user to optimize LAN configuration settings based on complementary WAN settings, enable a WAN operator to optimize its WAN settings based on complementary LAN settings, or both. Identification of an operational condition need not necessarily correlate to a problem or a diagnosed fault, as the identified configurations or the identified network characteristics may be appropriate or acceptable for a WAN operator and/or an end-user's LAN.

FIG. **3** illustrates an alternative exemplary architecture **300** in which embodiments may operate. For example, responsive to an operational condition being identified, the implementation module **235** may initiate one or more complementary management events. For example, the responsive management event may be limited to reporting the identified operational condition by generating and sending an appropriate report. Alternatively, in accordance with certain embodiments, the implementation module **235** may undertake specific actions to modify the identified operational condition, such as initiating a configuration change or executing corrective action instructions to affect the identified operational condition.

Which management event is triggered by a management device **170** may depend on the type of operational condition identified and also on how the management device **170** relates operationally to the WAN **205**, to the LAN **210** and/or to the source or location of the LAN and/or WAN information upon which the identified operational condition is based.

For example, in one embodiment, the management device is implemented within a Digital Subscriber Line (DSL) modem **305**, operating as a Customer Premises Equipment (CPE) device to communicatively interface a DSL based backhaul **310** provided via the WAN **205** to the LAN **210**. Such a DSL modem **305** may be accessible and at least partially configurable by an end-user consumer of the DSL service. In an alternative embodiment, the management device may be implemented within a DSL modem operating at a central office. In such an embodiment, the DSL modem may operate under the control of a DSL operator, yet nevertheless have access and authority to collect information from the LAN **210**.

In one embodiment, the management device **170** is implemented within and operates as a cable modem **315** at an end-user consumer location. In such an embodiment, the cable modem **315** communicatively interfaces a cable network based backhaul **320** provided via the WAN **205** to the LAN **210**.

In an alternative embodiment, the management device is implemented within a powerline modem at an end-user consumer location. In such an embodiment, the cable modem communicatively interfaces a powerline based (e.g., electric utility based backhaul) provided via the WAN **205** to the LAN **210**. The management device may similarly be implemented within a wireless modem operating to communicatively interface a wireless based backhaul provided via the WAN to the LAN; or be implemented within an Optical Network Terminal (ONT) operating to communicatively interface a fiber optic based backhaul provided via the WAN to the LAN.

In accordance with disclosed embodiments, the WAN provides Internet connectivity to a Local Area Network via one of: a wireless network connection; a wired network connection; a Digital Subscriber Line (DSL) network connection; a powerline network connection; a Passive Optical Network (PON) based network connection; a fiber optic based network connection; a cable based network connection; and a wireless network connection, such as WiFi connectivity at hotspots, or mobile data connectivity via technologies and standards such as WiMax, 3G/4G, LTE. The management device **170** may be implemented within and operate as an interfacing device between any such WAN based connection and a connected LAN, in which case the WAN provides Internet connectivity to the management device **170** which may additionally implement an appropriate WAN/LAN interface, such as a WAN to LAN gateway **330** or WAN/LAN bridge.

The management device **170** need not necessarily operate within a modem or within a device interfacing the respective WAN and LAN networks. For example, in one embodiment, the management device is implemented within a router **335** operating to communicatively interface a WAN backhaul **325** with the LAN. In such an embodiment, the router **335** may operate within the LAN **210** and connect with the WAN back-haul **325** through a WAN/LAN gateway **330** as depicted, or alternatively, the router **335** implementing the functionality and capabilities of the management device (e.g., **170**) may connect directly with a WAN back-haul **325**. In some embodiments, a WAN/LAN gateway **330** device is combined with a LAN based router **335** and implements the management device capabilities.

In one embodiment, management device **170** is implemented separately from a router **335**, gateway device **330**, computing device **370**, DSL/CPE modem device **305**, and cable modem **315**, for example, management device **170** may operate as a standalone unit. FIG. **3** depicts various alternative deployment examples of management device **170** being implemented separately from such devices and operating within WAN **205** or within LAN **210**, thus enabling management device **170** to collect information from the respective networks. Alternatively, management device **170** may be implemented separately from such devices but interface directly to another device, such as to the WAN/LAN gateway **330** as depicted or to a modem (e.g., **305**, **315**) or as a peripheral device attached to a computing device (e.g., **370**), thus enabling management device to collect information from the respective networks and perform other operations as described herein. Other combinations are also feasible where the management device **170** is enabled to collect information from each of a WAN **205** and a LAN **210** as described herein.

In accordance with disclosed embodiments the LAN interfaces one or more networked devices operating within the LAN to the management device via one or more of: an Ethernet based network connection; a wireless based network connection; an Institute of Electrical and Electronics Engineers (IEEE) 802.11 standards based network connection; an 802.11a, 802.11b, 802.11g, and/or 802.11n WiFi compatible network connection; a femto network connection transmitting via a mobile cellular compatible protocol including at least one of a third generation (3G) compatible protocol, a fourth generation (4G) compatible protocol, and a Long Term Evolution (LTE) compatible protocol; a powerline connection; a telephone system connection; a Plain

Old Telephone Service (POTS) connection; an ITU G.hn connection; a Coax cable connection; and a wireless network connection, such as WiFi connectivity at hotspots, or mobile data connectivity via technologies and standards such as WiMax, 3G/4G, LTE. The management device **170** may be implemented within and operate as one of the networked devices operating within the LAN, for example, as a computer communicatively interfaced with the LAN **210**.

In some embodiments, the management device does not operate inline with the communication channel related to the WAN and the LAN in the way that a WAN/LAN gateway **330** or a modem operating between the WAN and the LAN operates. Instead, the management device may be implemented within a computing device **370** remotely located from a WAN/LAN interface through which a communication channel related to the WAN **205** and the LAN **210** is connected. Such a computing device may provide remote monitoring and management functionality for the WAN/LAN interface, such as monitoring, collecting, and analyzing data associated with an ISP's WAN back-haul **325** or associated with a WAN/LAN gateway **330** device.

Computing device **370** may operate within the LAN **210** and communicate with LAN devices over LAN **210** connections and protocols and additionally communicate with WAN based devices over a WAN back-haul **325** connecting the LAN to the WAN. Computing device **370** may alternatively operate within the WAN **205**. In such an embodiment, the computing device **370** need not necessarily be associated with a WAN operator, such as an ISP, providing internet services to an end-user consumer. For example, a computing device **370** that implements the management device functionality may operate on the Internet beyond the infrastructure owned or operated by an ISP providing the WAN back-haul **325**, but nevertheless communicate with WAN based devices over the ISP's network via WAN **205** and communicate with LAN based devices via a WAN/LAN gateway **330** which connects LAN **210** to the WAN **205**. In an alternative embodiment, computing device **370** may communicate with WAN based devices and/or LAN based devices via an out-of-band interface. For example, rather than communicating with LAN/WAN based devices over the WAN **205** or LAN **210** networks, a computing device **370** implementing the management device capabilities may communicate over a management interface that connects over a separate communication channel, such as over a wireless cellular connection or by establishing a separate dial-up modem connection over an analog telephone line. In one embodiment, the management devices **170** or multiple management devices **170** are controlled by a third party operator, other than the owner/operator of the LAN and other than an owner/operator of the WAN. For example, a service provider may provide management, support, provisioning, and distribution services for multiple management devices so as to jointly optimize WAN/LAN network communications. Such a third party operator may contract with either a LAN owner/operator or a WAN owner/operator to provide such joint WAN/LAN network optimization services via one or more management devices **170**.

In one embodiment, a management device **170** initiating a management event responsive to an operational condition being identified includes the management device **170** generating instructions and to communicate the generated instructions to one or more devices selected from: a network element, a WAN device, and/or a LAN device communicatively interfaced with the management device **170**. In such an embodiment, the generated instructions may be communicated via one of: a TR-069 (Technical Report 069) compatible communications protocol; a Transmission Control Protocol/Internet Protocol (TCP/IP) communications protocol; a Simple Network Management Protocol (SNMP) communications protocol; an out-of-band telephone line protocol; a Digital Subscriber Line Ethernet over Coax (DSL EOC) communications protocol; a cable control channel communications protocol; a powerline control channel communications protocol; a Command Line protocol (CLI); via a wireless device; or via a mobile device.

In accordance with certain embodiments, one of the above protocol transfer mechanisms is utilized to transfer instructions from the management device **170** over a LAN interface of the management device to LAN based devices, utilized to transfer instructions from the management device **170** over a WAN interface of the management device to WAN based devices, or utilized to transfer instructions from the management device **170** over a management interface of the management device to one or more networked devices.

In some embodiments, initiating a management event includes the management device **170** generating instructions to change an identified operational condition. In one embodiment, the management device **170** further executes the generated instructions. For example, the management device **170** may execute the commands within the management device **170** locally to change the configuration of the management device. For example, where the management device **170** is implemented within a WAN/LAN gateway or within a modem or a router, the management device may generate instructions and execute the instructions locally to change the configuration of the WAN/LAN gateway, modem, or router.

Alternatively, the management device may need to send the generated instructions to a distinct device to trigger or initiate a change to an identified operational condition. For example, where a management device **170** is located within a LAN based device and identifies an operational condition within a WAN based device (such as a fault or an unwanted configuration), the management device **170** may send or transmit the generated instructions to a second networked device to trigger or initiate a change. In some embodiments, the management device **170** may be able to remotely execute commands on a second networked device directly (e.g., via a remote command shell or a remote command interface). In alternative embodiments, the management device **170** sends an execution request to a second networked device soliciting execution of the commands or instructions.

For example, in one embodiment, initiating a management event responsive to the operational condition being identified constitutes an implementation module **235** of the management device **170** to generate commands based on the joint analysis to change a configuration of a LAN device communicatively interfaced with the management device and execute the commands against the LAN device to change the configuration of the LAN device.

In an alternative embodiment, initiating a management event responsive to the operational condition being identified constitutes an implementation module **235** of the management device to generate a request based on the joint analysis, in which the request specifies a configuration change to be implemented by a WAN operator, and the management device **170** to additionally send the request to the WAN operator triggering the WAN operator to implement the configuration change.

For example, the management device may collect or estimate one or more user preferences, analyze the one or more user preferences, and determine that a configuration

change implemented by the WAN operator implements one or more of the user preferences. In such an example, an implementation module of the management device may responsively generate instructions to change the operational condition based at least in part on the one or more user preferences and transmit such instructions to the WAN operator. If the management device was located within a WAN based device, such as within a DSL modem operating at a central office, the instructions may be instead executed locally, for example, to alter a DSL connection configuration settings or configuration controlled by the WAN operator. User preferences may specify various configurable or manageable characteristics for either the WAN or the LAN or both. For example, user preferences may indicate that the WAN and/or LAN should be optimized for streaming video, or gaming, or large data transfers, etc. Such optimizations may correspond to distinct operational settings affecting, for example, latency, error correction, transmit power, etc. User preferences may indicate a desired service level, which may correspond to a particular pricing scheme. For example, user preferences may indicate a less expensive rate plan in exchange for a reduced bandwidth transmit rate or a reduced bandwidth cap, or vise-versa.

In one embodiment, user preferences may be implicitly derived rather than explicitly specified. For example, a WAN operator providing internet bandwidth to an end-user may determine based on network traffic originating from the end-user's LAN that a certain class of network traffic is predominate or prioritized over the communication channel related to the WAN and the end-user's LAN. In such an embodiment, the management device operating at the WAN, having collected information from the LAN, may responsively alter the operational configuration of the WAN/LAN communication channel to optimize the communication channel for the predominate or prioritized class of network traffic.

In accordance with embodiments of the invention, initiating a management event responsive to the operational condition being identified includes the management device **170** (e.g., via its implementation module) may perform one or more of the following operations: 1) generate instructions to reduce transmit power of WAN elements (e.g., WAN based transceiver elements) when LAN bandwidth utilization is below a threshold; 2) generate instructions to reduce transmit power of LAN elements (e.g., LAN based transceiver elements) when WAN bandwidth utilization is below a threshold; 3) generate instructions to modify one or more parameters affecting WAN forward error correction (FEC), WAN latency, WAN transmit power levels, and WAN data rate, based on the collected LAN information; 4) generate instructions to modify an active Digital Subscriber Line (DSL) profile or configuration settings based on identifying network traffic related to the WAN and the LAN comprising a data type (e.g., a data class or a class type) corresponding to at least one of: video data, audio data, text data, graphical data, Voice over Internet Protocol (VoIP) data, or network gaming data, wherein the active DSL connection configuration settings is modified to optimize transmission parameters for the identified data type; and 5) generate instructions to reduce power of a DSL transceiver operating within the WAN based on data utilization levels detected within the LAN.

The above instructions each implement a change to an identified operational condition. Optimizing WAN/LAN based communications may at times, constitute reducing transmit rates and transmit power, so as to achieve reduced energy usage. Reducing transmit rates and power levels on a LAN or WAN based transceiver may be selected when it is determined that the respective network is not being actively utilized. Such optimization may not only reduce energy usage for the respective LAN or WAN based elements, but may improve network communications for other consumers of the WAN or for other LANs which may benefit from, for example, less contention for network resources.

The above optimizations may alternatively implement or trigger LAN or WAN configuration changes that alter network characteristics. For example, a WAN configuration may be modified based on collected LAN information that identifies an operational condition within the LAN that corresponds to usage or consumption of a particular class of network traffic. For example, where it is determined that streaming video is being actively consumed by a LAN device, management device **170** may responsively configure the WAN to implement a higher data rate connection with minimized data correction where a streaming video may benefit from an increased data rate and may not be adversely affected by a minimized correction scheme (e.g., stream errors may generate momentary pixilation but may not require correction as the errored frame likely has already passed, and thus, may not be referenced again or even referenceable, by the time correcting data is provided). Conversely, a particular class of data may benefit from minimized latency such as VoIP data which requires a low data rate, but may frustrate human users where a delay attributable to network latency is present. Other examples, may include gaming data which may benefit from low latency, not necessarily require high data rates, but in certain situations may require high data accuracy. Bursty file transfers (e.g., large but intermittent) and steady data streams may similarly be identified and optimized (e.g., accuracy may be very important but latency may be less important).

In some embodiments, WAN side configurations are altered based on collected LAN information, or LAN side configurations are altered based on collected WAN information, or both LAN and WAN side configurations may be altered based on collected LAN and/or WAN information. For example, a LAN device may overload a WAN back-haul connection by providing data faster than the WAN is capable of transmitting traffic. In such an instance, network communications may be optimized by reducing the data rate at which LAN information is provided to the WAN. Aligning these rates may reduce collisions and buffering errors due to a traffic backlog. The opposite may equally be true. A WAN back-haul may be capable of providing data to a LAN device faster than the LAN device itself can process the data, thus creating an un-optimized mismatch from the WAN to the LAN device, and thus providing an opportunity for joint optimization.

In one embodiment where the identified operational condition corresponds to a problem or a fault, the implementation module responsively generates and instantiates execution of instructions to remedy the fault. For example, the instructions may be instantiated within the management device, within a LAN device connected via the LAN interface, within a WAN device connected via the WAN interface, or within a network element connected to the management device via a management interface of the management device.

In one embodiment, information collected from the LAN **210** and WAN **205** relates to two distinct communication layers. One example of the two communication layers is two layers of the Open Systems Interconnection model (OSI model). The OSI model is a commonly used model describing the different data processing layers, in digital commu-

nication systems. The communication layers could also correspond to other communication protocols or layers such as TCP/IP which might not directly correspond to one of the layers of the OSI model.

For example, information from one layer on the WAN **205** may be used to diagnose or improve the performance on a different layer on the LAN **210**, or vice versa. In one embodiment, information is collected from the LAN **210** (for example, collected from a home network) by the Management device **170**. Based on analysis of the information by the Management device **170**, a management event initiated by the Management device **170** responsive to the analysis is applied to the WAN **205**. In one example, a management event may include adjusting settings and configurations on a WAN **205** (for example a DSL network) in response to the analysis. Information collected from the LAN **210** may be from different layers of the LAN **210**, such as from the application layer and the networking layer. The settings and configuration on the DSL system may be implemented at the physical layer, by setting physical layer parameters of the DSL system. For example, the DSL system physical layer settings may be implemented through the setting of the DSL connections configuration settings. Implementing physical layer settings may be performed at the Central office (CO) side or at the (Customer Premises Equipment) CPE side. It is noted that in the absence of the Management device **170**, it is not possible to optimize or monitor the performance of the LAN, based on information from the WAN or to optimize or monitor the performance of the WAN, based on information from the LAN. This is because the control mechanisms and control channels on the two networks are distinct and separate. A Management device **170** as described herein addresses such a problem and enables such monitoring and optimizations which are not otherwise feasible.

In another example, data and information may be collected at a networking layer, or TCP/IP layer from the LAN **210**. Such information may, for example, be related to the performance of the LAN **210**. The information may, for example, indicate packet data rate, packet error rate, throughput, or TCP/IP related information regarding quality of the link, such as packet retransmission rate, etc. For example, where analysis indicates the TCP/IP layer on the LAN **210** side is experiencing excessive dropped packets or a lower than expected throughput, and yet, no known issues with the LAN are detected, the underlying problem may be attributed to the WAN **205** side. In a particular case, where the WAN **205** is a DSL connection, the DSL link settings and configuration could be changed, for example, initiating the change as a management event responsive to the above analysis. DSL connection setting may be implemented at the physical layer. For example, the DSL coding may be improved by adjusting the Forward Error Correction (FEC) parameters (e.g., channel coding). Alternatively, DSL rate may be decreased to improve link stability and quality. Other management events could include higher INP (Impulse Noise Protection) parameter setting, improved margin parameter settings and/or power parameter settings. In this example, the management device **170** would collect the information, perform the analysis, and initiate a management event, for example, by sending instructions to a DSL controller interfaced via a WAN interface **215** of the management device **170**. The management event thus corresponds to the reconfiguration setting of the DSL connection.

In the above examples, information on the networking layer of the LAN **210** is used to configure settings at the physical layer on the WAN **205**. Similarly, information and data collected from other layers may be incorporated. For example, information from the application layer on the LAN may be used. Take for example, a video streaming system where an MPEG (Moving Picture Experts Group) data stream is received with errors at the receiving side on the LAN **210**. One or more of channel coding parameters, INP (Impulse Noise Protection) parameters, margin parameter settings, power parameter settings, and/or data rate parameters for the DSL connection may be altered or modified to compensate for the receiving side errors in the video data stream.

The receiving side may be a TV set, a multi-media gateway, a personal computer, or other device capable of receiving the MPEG video stream. Physical layer profiles on the WAN **205** may be changed to address the problem (e.g., the received errors) on the LAN **210** side. For example, if the WAN **210** is a DSL system and analysis of the WAN **210** shows instability on the DSL line, then the problems on the LAN's **210** application layer may be attributed to the WAN **205** side, in this example, the problem/errors may be attributable to the DSL system. In such an example, DSL system settings (e.g., settings and parameters on the WAN **205**) may be set to stabilize the WAN DSL connection(s). For example, a new profile or DSL system configuration settings may be set on the DSL system, including, for example: improved coding, higher INP (Impulse Noise Protection) parameter setting, improved margin parameter settings, power parameter settings, and/or a lower data rate. In such an example, the management device **170** would collect the information, perform the analysis, and initiate a management event to, for example, a DSL controller communicatively interfaced to the management device **170**, for example, interfaced via WAN interface **215**. The management event thus corresponding to the reconfiguration of settings on the DSL connection, as described by the examples above.

In one embodiment, joint analysis includes finding problems or impairments on both the WAN **205** and the LAN **210** by analyzing the collected information from the LAN side and/or the WAN side. Take for example a WAN **205** supported by a DSL connection, and a LAN **210** supported by an HPNA (Home Phoneline Networking Alliance) connection. In the case of HPNA, the same telephone wiring used for the DSL based WAN access may also be used for HPNA based LAN communications within the LAN premises (for example local network communications within a home network). In some HPNA systems the frequencies of operation are above the ones used in the DSL connection. In such cases, impairments associated with the operational frequency bands may affect both the LAN **210** and the WAN **205** in similar ways. For example, radio frequency (RF) interference such as impulse noise or crosstalk affecting the operational frequencies on the DSL line may similarly affect operation of the HPNA system. With HPNA, even if the frequency bands are not overlapping, the sources of interference and crosstalk may nevertheless impact frequencies both on the HPNA based LAN **210** as well as frequencies on the DSL based WAN **205**. For example, a broadband noise source or harmonics of a crosstalk or interference source covering non-overlapping frequencies bands. Thus, in accordance with one embodiment, information regarding such interference is analyzed on the WAN side (e.g., by analyzing the bit distribution or other related parameters on the DSL connection it may become apparent that the line is being affected by RF interference, such as impulse noise or high power noise). In such as case, the resulting analysis of WAN **205** side information indicates the related problems on the

LAN **210** side are related to the RF interference. Conversely, in the absence of analysis done on the WAN **205** (e.g., DSL connection), it would not be possible to directly analyze the LAN **210** information (e.g., the HPNA based system). In such a way, the WAN information enables identifying and detecting or diagnosing the source of problem on the LAN **210**. This made possible despite current HPNA based systems failing to provide relevant data through their control or management interfaces from which information regarding interference may otherwise be analyzed. It is possible to analyze the physical layer information on a DSL connection (such as bit distribution) to infer information about noise or interference. In case the source of the problem is found or diagnosed to be interference or external noise, the settings on the DSL connection may be adjusted to mitigate or reduce the effect of the problem. For example, the DSL coding may be improved by adjusting the FEC parameters, the DSL rate may be decreased to improve the link stability and quality, or the INP settings may be changed to guard against impulse noise, or margin parameter settings could be improved, and/or power settings. In some cases, the mitigation may be done by instructing the LAN user to physically move their LAN devices (such as an HPNA gateway or a WiFi base-station) to a different location, so as to reduce exposure of such a device to the source of interference or external noise.

In such an embodiment, the management device **170** collects WAN and LAN diagnostics information from the WAN **205** (for example a DSL connection) and from the LAN **210** (for example a HPNA based LAN) respectively, performs joint analysis on the WAN/LAN diagnostics information, and diagnoses a fault. In the above example, the fault being the existence of interference or external noise. Joint analysis may include correlating information on the collected information from the LAN with the information collected from the WAN. For example, information from the LAN may include the time periods when the LANs throughput is below a threshold based on the LAN settings, indicative that a problem is present on the LAN. Joint analysis may further include correlating the above information with the duration of time when external noise or interference was observed on the WAN. High correlation among the two time periods (ascertained from the joint analysis) may be an indication that the problem on the LAN is related to the external noise and interference. In such a case, the management device **170** may responsively initiate a management event to the DSL controller initiating the reconfiguration of settings affecting the DSL connection, as described by the various examples above. A management event may alternatively be issued to the LAN side, for example recommending the location change of the LAN device, as described above.

In one embodiment, the management device **170** performs joint analysis of data throughput information on the LAN and the WAN. For example, the LAN may include a wireless device (e.g., a Femto cell, WiFi, etc.) and the WAN may include a DSL based connection. In this embodiment, the LAN side throughput performance is optimized or improved by optimizing the settings on the WAN side (e.g., the DSL connection). In another embodiment, the LAN side throughput problem is diagnosed by analyzing information from the WAN side. For example, it is possible that the LAN system, such as the WiFi access point or the FemtoCell base-station, are set to transmit information at the highest possible rate and throughput, yet the WAN side throughput is set to a lower data rate which does not support the needed throughput required by the LAN. Analyzing the information from the LAN would indicate the WAN settings needs to be adjusted. If the WAN supports a higher throughput, the Management device **170** may initiate a management event to the WAN controller, such as a DSL system controller on the CPE side or CO side, demanding an increase in the supported data rate or throughput. Correspondingly, the LAN may be limited to supporting a lower data rate than the WAN, yet the WAN is nevertheless configured to higher data rate (e.g., a rate greater than that which is supported by the LAN). In such a case, it is possible that a DSL based WAN link is not only wasting power, but may additionally be more prone to instability. DSL links are more susceptible to noise and other impairments when operating at high data rates because they are typically operating at lower margins. In such a case, Management device **170** initiates a management event, sending instructions to the WAN (such as DSL controller) to lower the data rate on the WAN side, making the WAN connection more stable. Additionally, a mismatch between the WAN and the LAN throughputs may cause errors on both networks due to the overloading of buffering mechanisms on the gateways between the WAN and the LAN. For example, network congestion on the LAN side, requiring higher data throughput on the WAN/LAN connection may overwhelm the WAN/LAN gateway (such as the WAN/LAN gateway **330**) between the WAN and the LAN. In such a case, the WAN throughput needs to accordingly increase to overcome the throughput shortage. For example, if the WAN is a DSL connection, the data rate on the DSL connection should be increased to support the higher throughput demand on the WAN side, however, conventional DSL systems and WAN systems are not capable of automatically detecting such demands on the LAN (e.g., detecting the need for an increased data rate and responsively implementing the increases), because the control mechanisms and control channels on the two networks are distinct and separate, hence the need for a Management device **170** as described herein which addresses such a problem.

In another embodiment, WAN settings are optimized to match the data communication types on the LAN. For example, the data communications types on the LAN may include information on traffic types which are delay sensitive, for example voice communication data. Analyzing the collected information from the LAN, by the Management device **170**, indicates that the data types are voice communications and therefore delay sensitive. In such a case, the Management device **170**, by initiating a management event, would adjust the WAN settings in order to support delay sensitive traffic (e.g., traffic requiring very low latency). For example, when the WAN is a DSL system, the DSL connection configuration settings may be adjusted to induce lower latency. Setting of the adjusted DSL connection configuration settings is initiated by the Management device **170** via triggering a management event. In another example the delay and INP settings, which are two DSL physical layer parameters, are set to their respective minimums, or set to the lowest possible values which allow the DSL communication link to maintain acceptable stability and maintain required quality and performance levels. INP and delay settings may be implemented or changed via management events initiated by the Management device **170**.

FIG. **4** illustrates an alternative exemplary architecture **400** in which embodiments may operate. In accordance with certain embodiments, collected LAN information includes neighborhood analysis relating to Internet connectivity provided to a plurality of locations in a neighborhood or a shared geographical area **435** with the management device **170**. In such an embodiment, initiating a management event

includes a management device generating instructions/commands to change a configuration of a WAN device based on the neighborhood analysis collected. In an alternative embodiment, initiating a management event includes a management device generating instructions to change a configuration of a LAN device based on the neighborhood analysis.

Neighborhood analysis may be conducted when information from multiple sources may be aggregated to provide a broader analytical context. For example, remote terminals **425**A, **425**B, and **425**C are depicted as traversing a shared back-haul **405** to a WAN **410**A. WAN **410**A includes a management device **170** implemented as described herein. Because remote terminals **425**A-C all traverse a common back-haul **405**, information may be retrievable from each of the remote terminals **425**A-C and correspondingly from Local Area Networks **415**A, **415**B, and **415**C respectively. The information may be collected by management device **170** within WAN **410**A and utilized to optimize the WAN and LAN networks and the communication paths between the respective WAN and LAN networks.

For example, a shared back-haul **405** may exist with DSL networks in which multiple twisted pair lines traverse a common DSL binder; a shared back-haul **405** may be present with multiple coaxial cable internet customers each contending for WAN based resources over a single coaxial cable over which at least a portion of WAN back-haul is implemented; a shared back-haul **405** may be present with a power line based Internet service provider in which multiple LANs (e.g., **415**A-C) associated with distinct end-users contend for WAN based resources over the same physical transmission lines; a shared back-haul **405** may similarly be present where multiple LANs (e.g., **415**A-C) associated with distinct end-users contend for WAN based resources over the same wireless transmission spectrum; a shared back-haul **405** may be present with fiber optic based connections each contending for WAN based resources; or a share back-haul **405** may comprise of a combination of the above communication means, such as a combination of coaxial cable, fiber and twisted pairs.

In such embodiments, a management device **170** may collect information from multiple distinct LANs and analyze the collected information from the multiple LANs to identify an operational condition. Such analysis may be referred to as neighborhood analysis. The management device **170** may then report, diagnose, monitor, or generate instructions to implement an operational change based on the neighborhood analysis. For example, the management device **170** may implement WAN/LAN network optimizations which include increasing transmit power and data rates to one LAN (e.g., **415**A) based on determination that another LAN represented within the neighborhood analysis is inactive or has a low activity rate (e.g., LAN **415**C may be determined to be underutilized). In such an embodiment, a corresponding decrease of transmit power and data rate may be implemented for the underutilized LAN (e.g., **415**C in such an example).

In another embodiment, neighborhood analysis may indicate that the shared back-haul **405** is saturated due to a demand load in excess of capacity based on analysis of LAN information retrieved from the multiple distinct LANs **415**A-C in which case the management device **170** may responsively implement a load-balancing algorithm on a WAN/LAN interface (e.g., a DSL modem, cable modem, ONT unit, etc.) interfacing each of the respective LANs **415**A-C to the single shared back-haul **405**. In such a way, overall network efficiency may be improved by reducing collisions, buffering queues, data re-transmits, and other excessive overhead waste that may occur due to an overwhelmed network communication path, such as a shared WAN back-haul **405**.

In accordance with an alternative embodiment, a collection module of a management device **170** collects the neighborhood analysis from a WAN operator (e.g., WAN **410**B), where the neighborhood analysis describes LAN wireless transmission channels for a plurality of locations in a shared geographical area with the management device. For example, within the neighborhood or shared geographical area **435** are multiple distinct LANs **415**D, **415**E, and **415**F. Each of the distinct LANs **415**D-F are transmitting information **440** to WAN **410**B, such as an ISP or Wide Area Network Operator. The information **440** sent via each of the LANs may describe various characteristics about the LAN from which the information originated. In one embodiment, the WAN **410**B aggregates the information **440** and makes the aggregate information available as neighborhood analysis. Each management device **170** within each of the respective LANs **415**D-F may then collect and analyze the neighborhood analysis, and may additionally implement operational changes within a corresponding LAN **415**D-F based on the information collected from the WAN **410**B.

Thus, in accordance with one embodiment, instructions are generated by a management device **170** to change the configuration of a LAN device based on the neighborhood analysis. In one embodiment, the generated instructions select a LAN wireless transmission channel for a LAN device communicatively interfaced with the management device **170** that minimizes wireless interference between the LAN device and a plurality of other locations in the neighborhood or shared geographical area **435** with the management device **170**. In some embodiments, each of the management devices within the various LANs **415**D-F implement similar instructions, although, the management devices **170** within the respective LANs **415**D-F need not have operational awareness of any other management device **170** as the neighborhood analysis is collected from WAN **410**B. In alternative embodiments, a management device within the WAN **410**B or located elsewhere may initiate instructions to implement an operational change within the WAN or within multiple distinct LANs.

In the above embodiment, operational efficiency of the individual LANs may be improved by reducing interference between closely located LANs, based on the neighborhood analysis. Such information may be correlated by a WAN operator based on, for example, mapping overlapping identifiers to a virtually rendered neighborhood or shared geographic area **435** or alternatively, based on actual knowledge of geographic locations for multiple LANs **415**, for example, by cross referencing subscribers' service address information to physical locations.

Diagnostics may similarly rely upon neighborhood analysis yielded from multiple distinct LANs **415**. For example, multiple LAN devices exhibiting high error counts, or abnormal retrains/modem resets, may be indicative of a fault within the WAN infrastructure rather than a statistically less likely coincidence that multiple LAN side devices are each simultaneously exercising a similar fault. In a complementary way, neighborhood analysis from multiple LANs **415** within a common geographical area or multiple LANs associated with a single shared back-haul **405** may aid in systematically diagnosing a LAN side fault within a particular end-user consumer's local area network where similar devices operating in neighboring LANs **415** do not present corresponding errors or faults within the neighborhood analysis.

FIG. **5** shows a diagrammatic representation of a system **500** in which embodiments may operate, be installed, integrated, or configured.

In one embodiment, system **500** includes a memory **595** and a processor or processors **590**. For example, memory **595** may store instructions to be executed and processor(s) **590** may execute such instructions. Processor(s) **590** may also implement or execute implementing logic **560** having logic to implement the methodologies discussed herein. System **500** includes communication bus(es) **515** to transfer transactions, instructions, requests, and data within system **500** among a plurality of peripheral devices communicably interfaced with one or more communication buses **515**. In one embodiment, system **500** includes a communication means **515** to interface, transfer, transact, relay, and and/or communicate information, transactions, instructions, requests, and data within system **500**, and among plurality of peripheral devices. System **500** further includes management interface **525**, for example, to receive requests, return responses, and otherwise interface with network elements located separately from system **500**.

In some embodiments, management interface **525** communicates information via an out-of-band connection separate from LAN and/or WAN based communications, where "in-band" communications are communications that traverse the same communication means as payload data (e.g., content) being exchanged between networked devices and where "out-of-band" communications are communications that traverse an isolated communication means, separate from the mechanism for communicating the payload data. An out-of-band connection may serve as a redundant or backup interface over which to communicate control data between the management device **170** and other networked devices or between the management device **170** and a third party service provider.

System **500** further includes LAN interface **530** to communicate information via a LAN based connection, including collecting LAN information from within a LAN, reporting information and diagnostics to other entities within the LAN, and for initiating instructions and commands over the LAN. Information communicated via a LAN interface **530** may, in some embodiments, traverse the LAN to a LAN to WAN interface and continue to a destination within a connected WAN. System **500** further includes WAN interface **535** to communicate information via a WAN based connection, including collecting WAN information from within a WAN, reporting information and diagnostics to other entities within the WAN, and for initiating instructions and commands over the WAN. Information communicated via WAN interface **535** may, in some embodiments, traverse the WAN to a WAN to LAN interface and continue to a LAN based destination.

System **500** further includes stored historical information **550** that may be analyzed or referenced when conducting long term trending analysis and reporting. System **500** may further include multiple management events **555**, any of which may be initiated responsive to the identification of an operational condition. For example, corrective actions, additional diagnostics, information probes, configuration change requests, local commands, remote execution commands, and the like may be specified by and triggered as a management event **555**. Similarly, operational reports, configuration reports, network activity reports and diagnostic reports may be generated and sent in accordance with stored management events **555**. The stored historical information **550** and the management events **555** may be stored upon a hard drive, persistent data store, a database, or other storage location within system **500**.

Distinct within system **500** is Management Device **501** which includes collection module **570**, analysis module **575**, diagnostics module **580**, and implementation module **585**. Management Device **501** may be installed and configured in a compatible system **500** as is depicted by FIG. **5**, or provided separately so as to operate in conjunction with appropriate implementing logic **560** or other software.

In accordance with one embodiment, collection module **570** collects information from available sources, such as LAN information and WAN information via interfaces of system **500**, including one or more of management interface **525**, LAN interface **530**, and/or WAN interface **535**. Analysis module **575** analyzes the information retrieved via collection module **570**. In some embodiments, LAN information and WAN information is jointly analyzed to identify an operational condition within the LAN based on collected WAN information or identify an operational condition within the WAN based on collected LAN information. Analysis module **575** may further perform long term trending analysis based on stored historical information **550** or conduct neighborhood analysis based on aggregation data yielded from multiple separate and distinct LANs. Diagnostics module **580** may conduct specialized diagnostic routines and algorithms in conjunction with or separately from analysis module **575**. Diagnostics module **580** may conduct additional probing diagnostics to retrieve or trigger the output of additional diagnostics information for further analysis. Implementation module **585** implements and initiates various management events **555** including generating and instantiating instructions for local or remote execution, generating and transmitting configuration change requests, generating and sending operational reports, diagnostic reports, and configuration reports.

FIGS. **6**A, **6**B, and **6**C are flow diagrams illustrating methods for jointly optimizing WAN and LAN network communications in accordance with described embodiments. Methods **600**A, **600**B, and/or **600**C may be performed by processing logic that may include hardware (e.g., circuitry, dedicated logic, programmable logic, microcode, etc.), software (e.g., instructions run on a processing device to perform various operations such as interfacing functions, collecting, monitoring, diagnosing and reporting information, and executing/imitating management events, commands and instructions responsive to analysis and diagnosis, or some combination thereof. In one embodiment, methods **600**A, **600**B, and **600**C are performed by a Management device such as that depicted at element **170** of FIG. **1** or via a Management Device such as that depicted at element **501** of FIG. **5**. Some of the blocks and/or operations listed below are optional in accordance with certain embodiments. The numbering of the blocks presented is for the sake of clarity and is not intended to prescribe an order of operations in which the various blocks must occur.

Method **600**A begins with processing logic for communicably interfacing a management device with a Local Area Network (LAN) and a Wide Area Network (WAN) as set forth at block **602**. At block **604**, processing logic collects WAN diagnostic information from a WAN and at block **606**, processing logic collects LAN diagnostic information from a LAN.

At block **608**, processing logic jointly analyzes the collected WAN diagnostic information and the collected LAN diagnostic information to diagnose a fault within the WAN based at least in part on the LAN diagnostic information or

to diagnose a fault within the LAN based at least in part on the WAN diagnostic information.

At block **610**, processing logic initiates a management event responsive to the fault being identified. Initiating a management event may include performing one or more various functions including: generating and transmitting a diagnostic report identifying the fault diagnosed within the WAN or identifying the fault diagnosed within the LAN based on the joint analysis as set forth at block **612**; generating instructions to remedy the fault diagnosed within the WAN or to remedy the fault diagnosed within the LAN based on the joint analysis as set forth at block **614**; and instantiating execution of the instructions to remedy the fault in at least one of the management device, a LAN device connected via the LAN interface, a WAN device connected via the WAN interface, or a network element connected to the management device via a management interface (block **616**).

Method **600**B begins with processing logic at block **630** communicably interfacing the management device with a Local Area Network (LAN) and a Wide Area Network (WAN).

At block **632**, processing logic collects WAN information from the WAN and LAN information from the LAN. At block **634**, processing logic jointly analyzes the collected WAN information and the collected LAN information to identify an operational condition and at block **636**, processing logic initiates a management event responsive to the operational condition being identified.

Initiating a management event may include performing one or more various functions including: Generating and transmitting an operational report describing the operational configuration of a communication channel related to the WAN and the LAN based on the joint analysis as set forth at block **638**; storing collected WAN information as historical WAN information and storing collected LAN information as historical LAN information as set forth at block **640**; performing historical performance trending analysis based on stored historical WAN information and stored historical LAN information as set forth at block **642**; and generating and transmitting a historical performance trending report describing the historical operational performance of a communication channel related to the WAN and the LAN as set forth at block **644**.

At block **646**, processing logic initiates a management event responsive to analysis of the stored historical WAN information or responsive to analysis of the stored historical LAN information, or responsive to analysis of both.

Method **600**C begins with processing logic at block **660** communicatively interfacing the management device with a Local Area Network (LAN) and a Wide Area Network (WAN). At block **662**, processing logic collects WAN information from the WAN and LAN information from the LAN. At block **664**, processing logic jointly analyzes the collected WAN information and the collected LAN information to identify an operational condition and at block **666**, processing logic initiates a management event responsive to the operational condition being identified.

Initiating a management event may include performing one or more various functions including: generating and executing commands against a LAN device to change the configuration of the LAN device commands based on the joint analysis as set forth at block **668**; and/or generating and sending a request to a WAN operator triggering the WAN operator to implement a requested configuration change based on the joint analysis as set forth at block **670**.

At block **672**, processing logic collects neighborhood information that is not yet analyzed from one or more WANs, from one or more LANs, or from a combination of WANs and LANs. Such information may be collected and subsequently aggregated and/or analyzed by a management device to generate neighborhood analysis.

At block **674**, processing logic collects neighborhood analysis from a WAN having aggregated LAN information or LAN information corresponding to multiple separate and distinct LANs; and at block **676**, processing logic initiates a management event responsive to analysis of the neighborhood analysis.

FIG. **7** illustrates a diagrammatic representation of a machine **700** in the exemplary form of a computer system, in accordance with one embodiment, within which a set of instructions, for causing the machine **700** to perform any one or more of the methodologies discussed herein, may be executed. In alternative embodiments, the machine may be connected (e.g., networked) to other machines in a Local Area Network (LAN), a Wide Area Network, an intranet, an extranet, or the Internet. The machine may operate in the capacity of a server or a client machine in a client-server network environment, or as a peer machine in a peer-to-peer (or distributed) network environment or as a server or series of servers within an on-demand service environment, including an on-demand environment providing database storage services. Certain embodiments of the machine may be in the form of a personal computer (PC), a tablet PC, a set top box (STB), a Personal Digital Assistant (PDA), a cellular telephone, a web appliance, a server, a network router, switch or bridge, computing system, or any machine capable of executing a set of instructions (sequential or otherwise) that specify actions to be taken by that machine. Further, while only a single machine is illustrated, the term "machine" shall also be taken to include any collection of machines (e.g., computers) that individually or jointly execute a set (or multiple sets) of instructions to perform any one or more of the methodologies discussed herein.

The exemplary computer system **700** includes a processor **702**, a main memory **704** (e.g., read-only memory (ROM), flash memory, dynamic random access memory (DRAM) such as synchronous DRAM (SDRAM) or Rambus DRAM (RDRAM), etc., static memory such as flash memory, static random access memory (SRAM), volatile but high-data rate RAM, etc.), and a secondary memory **718** (e.g., a persistent storage device including hard disk drives and persistent data base implementations), which communicate with each other via a bus **730**. Main memory **704** includes information and instructions and software program components necessary for performing and executing the functions with respect to the various embodiments of the Management Device as described herein. For example, historical WAN/LAN information **724** may include previously collected LAN information from a LAN and WAN information from a LAN which may be collected over a period of time and referenced later for performing trending analysis. Management events **723** may be stored within main memory **704** and triggered or initiated responsive to analysis of LAN and/or WAN information collected by management device **734**. Main memory **704** and its sub-elements (e.g. **723** and **724**) are operable in conjunction with processing logic **726** and/or software **722** and processor **702** to perform the methodologies discussed herein.

Processor **702** represents one or more general-purpose processing devices such as a microprocessor, central processing unit, or the like. More particularly, the processor **702** may be a complex instruction set computing (CISC) micro-

processor, reduced instruction set computing (RISC) microprocessor, very long instruction word (VLIW) microprocessor, processor implementing other instruction sets, or processors implementing a combination of instruction sets. Processor **702** may also be one or more special-purpose processing devices such as an application specific integrated circuit (ASIC), a field programmable gate array (FPGA), a digital signal processor (DSP), network processor, or the like. Processor **702** is configured to execute the processing logic **726** for performing the operations and functionality which is discussed herein.

The computer system **700** may further include one or more network interface cards **708** to communicatively interface the computer system **700** with one or more networks **720** from which information may be collected for analysis. The computer system **700** also may include a user interface **710** (such as a video display unit, a liquid crystal display (LCD), or a cathode ray tube (CRT)), an alphanumeric input device **712** (e.g., a keyboard), a cursor control device **714** (e.g., a mouse), and a signal generation device **716** (e.g., an integrated speaker). The computer system **700** may further include peripheral device **736** (e.g., wireless or wired communication devices, memory devices, storage devices, audio processing devices, video processing devices, etc.). The computer system **700** may perform the functions of a Management Device **734** capable interfacing networks, monitoring, collecting, analyzing, and reporting information, and initiating, triggering, and executing various management events including the execution of commands and instructions to alter an identified operational condition or perform corrective measures on a diagnosed fault, as well as the various other functions and operations described herein.

The secondary memory **718** may include a non-transitory machine-readable storage medium (or more specifically a non-transitory machine-accessible storage medium) **731** on which is stored one or more sets of instructions (e.g., software **722**) embodying any one or more of the methodologies or functions described herein. Software **722** may also reside, or alternatively reside within main memory **704**, and may further reside completely or at least partially within the processor **702** during execution thereof by the computer system **700**, the main memory **704** and the processor **702** also constituting machine-readable storage media. The software **722** may further be transmitted or received over a network **720** via the network interface card **708**.

While the subject matter disclosed herein has been described by way of example and in terms of the specific embodiments, it is to be understood that the claimed embodiments are not limited to the explicitly enumerated embodiments disclosed. To the contrary, the disclosure is intended to cover various modifications and similar arrangements as would be apparent to those skilled in the art. Therefore, the scope of the appended claims should be accorded the broadest interpretation so as to encompass all such modifications and similar arrangements. It is to be understood that the above description is intended to be illustrative, and not restrictive. Many other embodiments will be apparent to those of skill in the art upon reading and understanding the above description. The scope of the disclosed subject matter is therefore to be determined in reference to the appended claims, along with the full scope of equivalents to which such claims are entitled.

What is claimed is:

1. A management device, comprising:

a Local Area Network (LAN) interface to communicably interface the management device with a LAN;

a Wide Area Network (WAN) interface to communicably interface the management device with a WAN, wherein the WAN is to provide broadband connectivity to the LAN;

one or more processors; and

a non-transitory computer-readable medium or media storing one or more sequences of instructions which, when executed by at least one of the one or more processors, cause the management device to perform operations comprising:

collecting LAN information from one or more communication layers on the LAN; and

identifying one or more operational conditions within the WAN in a different communication layer from the one or more communication layers on the LAN by analyzing at least the collected LAN information.

2. The management device of claim **1** wherein the operations further comprising:

initiating a management event responsive to at least one of the one or more operational conditions being identified.

3. The management device of claim **2** wherein initiating the management event comprises one or more of:

decreasing WAN rate to improve link stability and quality;

increasing one or more Impulse Noise Protection (INP) parameter settings; and

increasing one or more margin parameter settings.

4. The management device of claim **2** wherein initiating the management event comprises performing one or more of the following operations:

generating instructions to change transmit power of WAN elements;

generating instructions to modify one or more parameters affecting WAN forward error correction (FEC), WAN latency, WAN transmit power levels, and WAN data rate; and

generating instructions to modify an active profile or configuration settings based on at least identified network traffic related to the WAN.

5. The management device of claim **1** wherein the one or more communication layers on the LAN and the different communication layer in the WAN are layers of Open Systems Interconnection (OSI) model.

6. The management device of claim **1** wherein the one or more communication layers on the LAN and the different communication layer in the WAN are layers of TCP/IP model.

7. The management device of claim **1** wherein the one or more operational conditions identified within the WAN comprise at least one of:

network congestion within the WAN;

excess power consumption by communication elements within the WAN;

bandwidth utilization of the WAN in excess of a maximum threshold;

bandwidth availability of the WAN below a minimum threshold;

errors on WAN connection;

performance measures on the WAN;

quality of WAN connection; and

failure of WAN connection.

8. A method for communication management comprising:

communicably interfacing, via a Local Area Network (LAN) interface, a management device with a LAN;

communicably interfacing, via a Wide Area Network (WAN) interface, the management device with a WAN, wherein the WAN is to provide broadband connectivity to the LAN;

collecting, at the management device, LAN information from one or more communication layers on the LAN; and

identifying, at the management device, one or more operational conditions within the WAN in a different communication layer from the one or more communication layers on the LAN by analyzing at least the collected LAN information.

9. The method of claim **8** further comprising:

initiating a management event responsive to at least one of the one or more operational conditions being identified.

10. The method of claim **9** wherein initiating the management event comprises one or more of:

decreasing WAN rate to improve link stability and quality;

increasing one or more Impulse Noise Protection (INP) parameter settings; and

increasing one or more margin parameter settings.

11. The method of claim **9** wherein initiating the management event comprises performing one or more of the following operations:

generating instructions to change transmit power of WAN elements;

generating instructions to modify one or more parameters affecting WAN forward error correction (FEC), WAN latency, WAN transmit power levels, and WAN data rate; and

generating instructions to modify an active profile or configuration settings based on at least identified network traffic related to the WAN.

12. The method of claim **8** wherein the one or more communication layers on the LAN and the different communication layer in the WAN are layers of Open Systems Interconnection (OSI) model.

13. The method of claim **8** wherein the one or more communication layers on the LAN and the different communication layer in the WAN are layers of TCP/IP model.

14. The method of claim **8** wherein the one or more operational condition within the WAN identified comprise at least one of:

network congestion within the WAN;

excess power consumption by communication elements within the WAN;

bandwidth utilization of the WAN in excess of a maximum threshold;

bandwidth availability of the WAN below a minimum threshold;

errors on WAN connection;

performance measures on the WAN;

quality of WAN connection; and

failure of WAN connection.

15. A non-transitory computer-readable medium or media comprising one or more sequences of instructions which, when executed by at least one processor, causes steps for communication management comprising:

communicably interfacing, via a Local Area Network (LAN) interface, a management device with a LAN;

communicably interfacing, via a Wide Area Network (WAN) interface, the management device with a WAN, wherein the WAN is to provide broadband connectivity to the LAN;

collecting, at the management device, LAN information from one or more communication layers on the LAN; and

identifying, at the management device, one or more operational conditions within the WAN in a different communication layer from the one or more communication layers on the LAN by analyzing at least the collected LAN information.

16. The non-transitory computer-readable medium or media of claim **15** further comprising one or more sequences of instructions which, when executed by at least one processor, causes steps for communication management comprising:

initiating a management event responsive to at least one of the one or more operational conditions being identified.

17. The non-transitory computer-readable medium or media of claim **16** wherein initiating the management event comprises one or more of:

decreasing WAN rate to improve link stability and quality;

increasing one or more Impulse Noise Protection (INP) parameter settings; and

increasing one or more margin parameter settings.

18. The non-transitory computer-readable medium or media of claim **16** wherein initiating the management event comprises performing one or more of the following operations:

generating instructions to change transmit power of WAN elements;

generating instructions to modify one or more parameters affecting WAN forward error correction (FEC), WAN latency, WAN transmit power levels, and WAN data rate; and

generating instructions to modify an active profile or configuration settings based on at least identified network traffic related to the WAN.

19. The non-transitory computer-readable medium or media of claim **15** wherein the one or more communication layers on the LAN and the different communication layer in the WAN are layers of Open Systems Interconnection (OSI) model.

20. The non-transitory computer-readable medium or media of claim **15** wherein the one or more communication layers on the LAN and the different communication layer in the WAN are layers of TCP/IP model.

* * * * *