US005655968A

United States Patent [19]

Burton

[11] **Patent Number: 5,655,968**

[45] **Date of Patent: Aug. 12, 1997**

[54] **DRIVESHAFT WITH SEALED SLIP JOINT SEAL**

[76] Inventor: **Robert A. Burton**, 3426 Bay Highland Dr., Green Bay, Wis. 54311

[21] Appl. No.: **646,202**

[22] Filed: **May 7, 1996**

Related U.S. Application Data

[63] Continuation of Ser. No. 269,385, Jun. 30, 1994, abandoned.

[51] **Int. Cl.**[6] **F16D 3/84**

[52] **U.S. Cl.** **464/133**; 277/24; 464/16

[58] **Field of Search** 464/7, 16, 162, 464/163, 157, 172, 183; 277/24, 63, 205

[56] **References Cited**

U.S. PATENT DOCUMENTS

2,116,290	5/1938	Spicer	464/172 X
3,123,990	3/1964	Freeman	464/16
3,270,418	9/1966	Berg	277/24 X
3,345,076	10/1967	Wheelock	277/24
3,543,536	12/1970	Rekow	464/16
3,633,383	1/1972	Kleinschmidt	464/16
3,942,336	3/1976	Schultenkämper	464/16 X
3,980,309	9/1976	Dechavanne	277/24
4,308,729	1/1982	Condon	464/16
4,592,556	6/1986	Nieman et al.	464/133 X
5,230,658	7/1993	Burton	464/16

FOREIGN PATENT DOCUMENTS

440518	8/1991	European Pat. Off.	464/133

Primary Examiner—Daniel P. Stodola
Assistant Examiner—Eileen A. Dunn
Attorney, Agent, or Firm—Allen D. Gutchess, Jr.

[57] **ABSTRACT**

A slip joint for a driveshaft having first and second universal joint yokes includes a first shaft extending rearwardly of the first yoke and rotatable therewith and a second shaft extending rearwardly of the second universal joint yoke and rotatable therewith. The shafts have external and internal splines to enable slidable but nonrotatable movement between the shafts. A sleeve extends rearwardly from the first yoke around the first shaft and a portion of the second shaft. The second shaft has two seals extending therearound and engagable with the interior surface of the sleeve. The first shaft has a bore extending completely therethrough and communicating with passages at both ends of the shaft. A lubricant is applied to the splines prior to assembly and a vent opening is plugged with the yokes in the middle position after assembly. The slip joint is completely maintenance free, never needing lubrication.

19 Claims, 2 Drawing Sheets

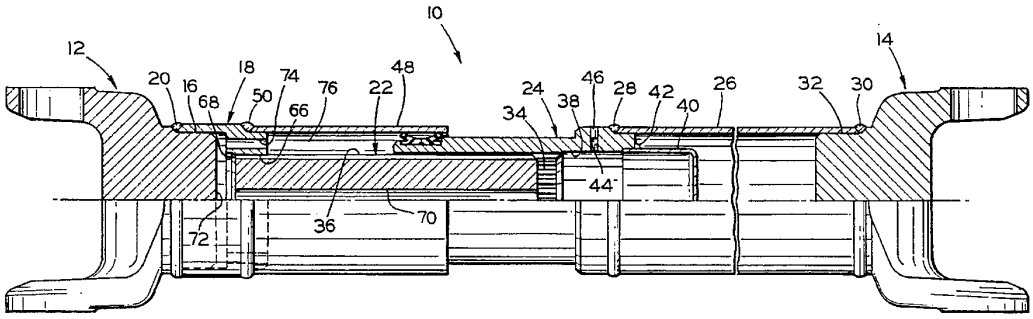

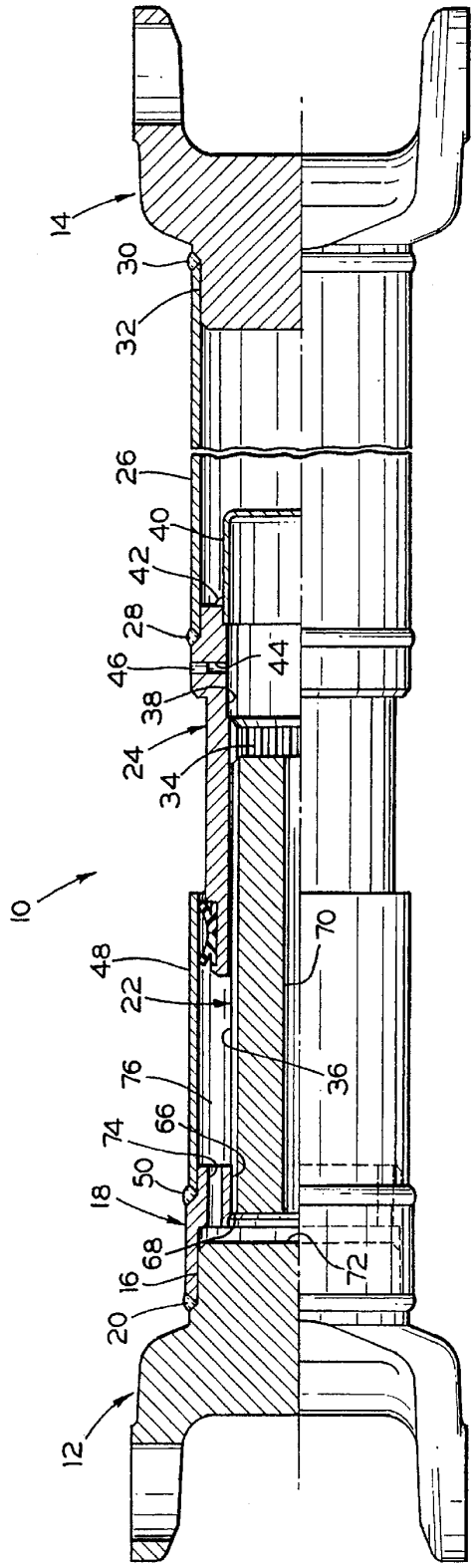
10
12
14
16
18
20
22
24
26
28
30
32
34
36
38
40
42
44
46
48
50
66
68
70
72
74
76

FIG. 1

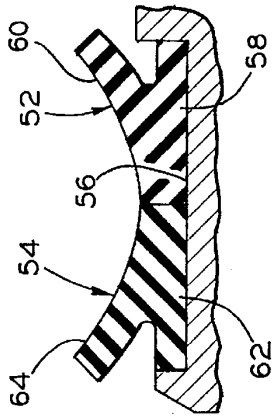
52
54
56
58
60
62
64

FIG. 2

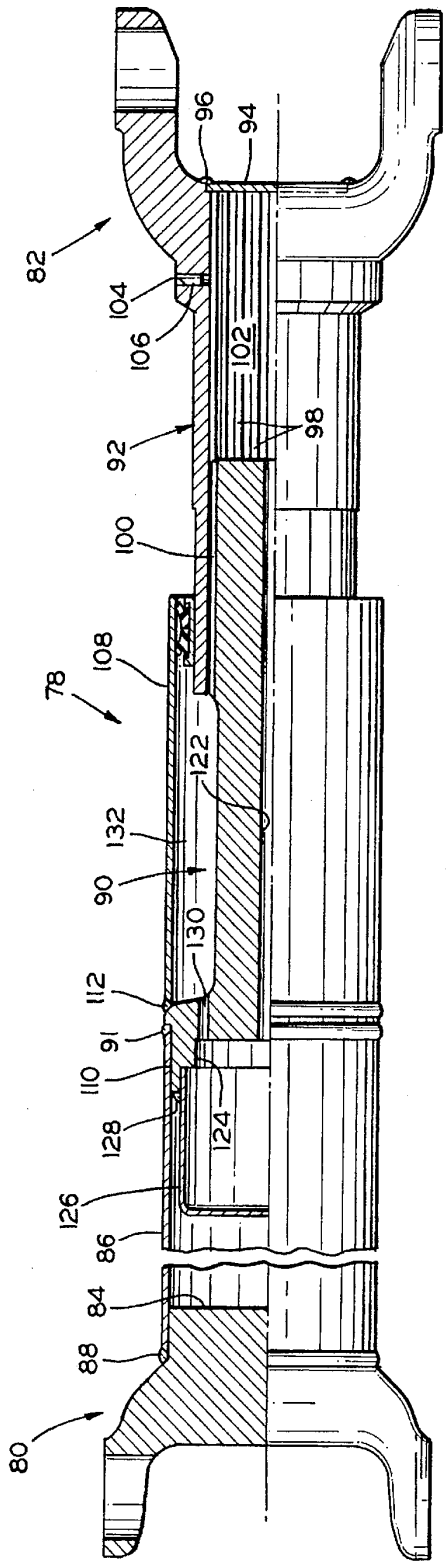
82
96
94
104
106
102
92
98
100
78
108
122
132
90
130
112
91
110
124
128
126
86
84
88
80

FIG. 3

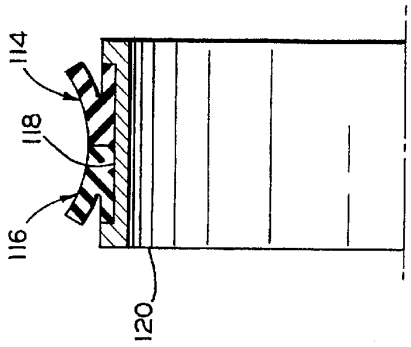
114
118
116
120

FIG. 4

DRIVESHAFT WITH SEALED SLIP JOINT SEAL

This is a continuation of application Ser. No. 08/269,385, filed Jun. 30, 1994, now abandoned.

This invention relates to a slip joint grease seal for a driveshaft.

Slip joint seals have been long known in the art. The slip joint comprises male and female splined shafts which connect between two universal joint yokes. They are rotatably connected but can slide relative to one another to accommodate differences in length of the driveshaft during operation. Various seals have been employed to maintain grease between the splined shafts. With one common type of seal heretofore employed, the male splined shaft is exposed to the elements when the universal joints are at extended positions, with contaminants, including water, then being carried back between the two shafts as the driveshaft contracts. Other seals have been overly complex, and inefficient and/or tend to wear out relatively quickly.

The seal in accordance with the invention is used with a slip joint which is between two universal joint yokes in a driveshaft which contracts and extends during operation of a vehicle with which it is used. The male splined shaft extends rearwardly from a first universal joint yoke and rotates therewith. This splined shaft has a central bore extending completely therethrough. A female splined shaft extends rearwardly of a second universal joint yoke, rotates therewith, and is mechanically engaged for slidable but nonrotatable movement with the male splined shaft for all positions of the driveshaft and the yokes. A sealing sleeve extends rearwardly of the first universal joint yoke and rotates therewith, being suitably affixed thereto. The sealing sleeve has an outer diameter exceeding the outer diameter of the female splined shaft which extends into an annular chamber formed between the male splined shaft and the sealing sleeve. The female splined shaft carries an outwardly-facing, annular sealing ring in a groove, at its outer end away from the second universal joint yoke. The sealing ring includes a base band under tension in the groove, with an outwardly-extending lip slanting toward the second universal joint yoke and engagable with the inner surface of the sealing sleeve for all operational positions of the two universal joint yokes. The slanted lip acts as a wiper to remove contaminants, including moisture, from the inner surface of the sealing sleeve when the driveshaft moved toward an extended position.

The female splined shaft also carries a second sealing ring in the annular groove on the side of the first seal toward the first universal joint yoke. It has a base band under tension and an outwardly-extending lip slanting toward the first universal joint yoke and also being engagable with the inner surface of the sealing sleeve for all operational positions of the two universal joint yokes. The second seal retains air and pushes lubricant toward the splines.

A chamber is located beyond the female splined shaft at an end portion toward the second universal joint yoke. A transverse hole communicates with this chamber and is plugged before the slip joint seal is placed in operation, as will be discussed subsequently. Also, passages are provided at the end of the male splined shaft to communicate with the annular space between the, sleeve and the shaft. The length of the sealing sleeve, a propeller shaft, and the male splined shaft can be varied according to the particular requirements.

A retainer cup is affixed to an end of the male splined shaft in one embodiment and to the female splined shaft in another embodiment to close off the corresponding shaft.

The cup is sized so that the volumes of air on each side of the connections of the splined shafts are substantially equal when the slip joint is in an intermediate or middle position.

A sticky or viscous lubricant or grease is applied between the splines of the two shafts before assembly. The slip joint is assembled in the middle position and the transverse hole is plugged to trap air. As the yokes move apart and closer together, the air is pushed from one side of the engaged splines to the other through the bore in the male splined shaft with minimal resistance. The slip joint seal is thus permanently sealed and does not require any maintenance during the life of the driveshaft. This seal represents an improvement over the seals disclosed in my U.S. Pat. Nos. 5,230,658, issued Jul. 27, 1993, and 5,299,982, issued Apr. 5, 1994, which require periodic lubrication.

It is, therefore, a principal object of the invention to provide an improved slip joint for a driveshaft having the objects and advantages discussed above.

Many other objects and advantages of the invention will be apparent from the following detailed description of preferred embodiments thereof, reference being made to the accompanying drawings, in which:

FIG. **1** is a longitudinal view, half in elevation and half in cross section, of a driveshaft employing a slip joint in accordance with the invention;

FIG. **2** is an enlarged view in transverse cross section of sealing rings employed with the slip joint of FIG. **1**;

FIG. **3** is a longitudinal view, half in elevation and half in cross section, of a driveshaft employed a modified slip joint in accordance with the invention; and

FIG. **4** is an enlarged view in transverse cross section of sealing rings and a mounting ring employed with the slip joint of FIG. **3**.

Referring to the drawings, and more particularly to FIG. **1**, a driveshaft embodying the invention is indicated at **10** and connects a first universal joint yoke **12** and a second universal joint yoke **14**. The yokes can be of various designs to accommodate particular universal joint crosses of particular styles.

The yoke **12** has a hub or butt **16** to which a yoke adaptor **18** is welded at **20**. A male splined shaft **22** extends rearwardly toward the second yoke **14** and rotates with the adaptor **18**. The splined shaft **22** can be of any suitable length, which can vary considerably from application to application.

A female splined shaft **24** extends rearwardly of the second universal joint yoke **14** and rotates therewith. In this instance, the splined shaft **24** is affixed to the yoke **14** through a propeller shaft or tube **26** to which it is welded at **28**. The propeller shaft **26** is also welded at **30** to a hub or butt **32** of the second yoke **14**. The length of the propeller shaft **26** can also vary considerably from application to application.

Internal splines **34** of the female splined shaft **24** engage external splines **36** on the male splined shaft **22** for all positions of the first and second universal joint yokes to enable slidable but nonrotatable movement between the shafts.

The female splined shaft **24** has a chamber **38** beyond the internal splines **34** and a retainer cup **40** is located beyond the chamber **38** and is welded at **42** to an end of the female splined shaft **24**. A transverse vent hole **44** communicates with the chamber **38** and contains a plug **46** which will be discussed subsequently.

The seal in accordance with the invention includes a sealing sleeve **48** extending rearwardly of the adaptor **18** and is welded thereto at **50**. The sealing sleeve **48** has an internal

diameter exceeding the outer diameter of the female splined shaft **24** and has a sufficient length such that the splined shaft **22** will not be exposed and the outer end portion of the female splined shaft **24** will always be within the sealing sleeve **48** for all operating positions of the driveshaft.

The seal in accordance with the invention also includes two sealing rings **52** and **54** (FIG. **2**) which are carried in back-to-back relationship in a groove **56** in an end portion of the female splined shaft **24**. The sealing ring **52** includes an annular base band S8 and a lip **60** which extends outwardly therefrom and slants toward the second universal joint yoke **14**. When the driveshaft **10** is moving toward the extended position, the lip **60** is effective to wipe any contaminants off the inner surface of the sealing sleeve **48**, which is relatively clean and never exposed directly to the elements.

The second sealing ring **54** also includes a base band **62** and a lip **64** slanting toward the first yoke **12**. This seal is effective to push air and lubricant back toward the male splined shaft when the yokes **12** and **14** move toward the retracted position. The sealing rings **52** and **54** are somewhat resilient so that the base bands **58** and **62** can be stretched over the end of the shaft **24** and be resiliently held under tension in the bottom of the groove **56**. The resiliency also enables the lips **60** and **64** to maintain uniform contact with the inner surface of the sleeve **48**. By way of example, the sealing rings can be made of carboxylated nitrile with a hardness in the order of 85 durometers (Shore A).

The male splined shaft **22** extends into a bore **66** in the adaptor **18** and the adaptor has a shrink fit on the ends of the splines **36**. The shaft is then welded to the adaptor **18** by a 360° weld indicated at **68**.

The male splined shaft **22** also has a central bore or passage **70** extending completely therethrough. It communicates with the chamber **38** in the female splined shaft **24** and with a transverse passage **72** between the end of the shaft **22** and the hub **16** of the yoke **12**. The transverse passage **72**, in turn, communicates with two holes or passages **74** in the adaptor **18** which are 180° apart. These in turn communicate with an annular space **76** between the sleeve **48** and the shaft **22**.

When the yokes move toward a retracted position, air moves from the space **76** through the passages **74**, **72**, and **70** toward the chamber **38** and the cup **40**. Oppositely, when the yokes **12** and **14** move toward an extended position, air moves from the cup **40**, the chamber **38**, and the passage **70** in the shaft **22**, into the passages **72** and **74**, and into the space **76**.

Prior to assembly of the slip joint, a thick, viscous lubricant or grease is applied to the male and female splines. After assembly, the slip joint seal and the overall driveshaft is placed in the middle position so that air volume at both ends of the splines is substantially equal. The plug **46** is then placed in the transverse hole **44** to permanently seal the slip joint. This seal does not require any maintenance during the life of the driveshaft and greatly reduces operating costs.

Referring to FIG. **3**, a modified driveshaft embodying the invention is indicated at **78**. This driveshaft and seal function similarly to that of FIG. **1** except that they are designed to accommodate commercially-available first and second yokes **80** and **82** with minimal modifications. The yoke **80** has a hub or butt **84** to which a propeller shaft or tube **86** is welded at **88**. A male splined shaft **90** extends rearwardly from the propeller shaft **86** and is welded thereto at **91**. The propeller shaft can be of any suitable length, which can vary considerably from application to application.

A female splined shaft **92** extends rearwardly of the second universal joint yoke **82** and is structurally integral therewith. The opening of the female splined shaft at the yoke **82** is sealed by a plate **94** which is affixed to the yoke by a 360° weld **96**.

Internal splines **98** of the female splined shaft **92** engage external splines **100** on the male splined shaft **90** for all positions of the first and second universal joint yokes to enable slidable but nonrotatable movement between the shafts.

The female splined shaft **92** has a chamber **102** beyond the end of the male splined shaft **90**. A transverse vent hole **104** communicates with the chamber **102** and contains a plug **106** which will be discussed subsequently.

The seal of FIG. **3** includes a sealing sleeve **108** extending rearwardly of the yoke **80** and is affixed to a large diameter hub **110** of the male splined shaft **90** by a weld **112**. The sealing sleeve **108** has an internal diameter exceeding the outer diameter of the female splined shaft **92** and has a sufficient length such that the splined shaft **90** will not be exposed and the outer end portion of the female splined shaft **92** will always be within the sealing sleeve **108** for all operating positions of the driveshaft.

The seal of FIG. **3** also includes two sealing rings **114** and **116** which are carried in back-to-back relationship in a groove **118** of a band **120**, in this instance. The band **120** can be affixed to an outer end of the female splined shaft **92** by a shrink fit, for example. The sealing rings **114** and **116** function in the same manner as the sealing rings **52** and **54** and will not be discussed in further detail. These rings can also be made of the same material.

The male splined shaft **90** also has a central bore or passage **122** extending completely therethrough. It communicates with the chamber **102** and with a chamber **124** in the hub **110** of the splined shaft **90**. The end of the chamber **124** is closed off by a retainer cup **126** welded to the hub **110** by a weld **128**. Passages or bores **130** in the hub **110** connect the chamber **124** with a space **132** between the sleeve **108** and the shaft **90**. Both of the cups **40** and **126** can be sized so that equal volumes of air are located on both sides of the engaged splines when the driveshaft and seal are in the middle position.

When the yokes **80** and **82** retract toward one another, air moves from the space **132** through the passages **130** and the chamber **124**, through the bore **122** and toward the chamber **102**. Oppositely, when the yokes **80** and **82** move toward an extended position, air moves from the cup **126** through the passage **122** and into the space **132**.

Like the driveshaft **10**, prior to the assembly of the driveshaft **78**, a thick, viscous lubricant or grease is applied to the male and the female splines. After assembly, the slip joint seal and the overall driveshaft are placed in the middle position so that air volume at both ends of the splines is substantially equal. The plug **106** is then placed in the transverse hole **104** to permanently seal the slip joint. No maintenance is required during the life of the driveshaft.

Various modifications of the above-described embodiment of the invention will be apparent to those skilled in the art, and it is to be understood that such modifications can be made without departing from the scope of the invention, if they are within the spirit and the tenor of the accompanying claims.

I claim:

1. A driveshaft comprising a first universal joint yoke, a second universal joint yoke spaced a varying distance from said first universal joint yoke when said driveshaft is in operation, a first shaft extending rearwardly of said first universal joint yoke and rotatable therewith, a second shaft extending rearwardly of said second universal joint yoke and

rotatable therewith, said first shaft having external splines and said second shaft having internal splines which are in mechanical engagement with one another for all operating positions of said first and said second universal joint yokes to enable slidable but nonrotatable movement between said first and second shafts, said second shaft having first and second seals extending therearound at an outer end portion thereof toward said first universal joint yoke, said first and second seals having base bands engaging the outer end portion of said second shaft, said first and second seals having annular lips extending outwardly from said base bands in opposite directions, a sleeve extending rearwardly of said first universal joint yoke, having an open end, and extending over at least a substantial portion of said first shaft, said sleeve having a diameter greater than the outer diameter of said second shaft, said first and second seals being in contact with an inner surface of said sleeve for all operating positions of said first and said second universal joint yokes for sealing off outside air, a bore in said first shaft extending completely therethrough, connecting passage means connecting said bore and space between said sleeve and said first shaft to enable the passage of air between said bore and the space between said sleeve and said first shaft when said first and said second shafts move toward and away from one another during operation of the driveshaft, first closing off means closing off said first shaft from outside air beyond said connecting passage means, and second closing off means closing off said second shaft from outside air at the end toward said second yoke, one of said first closing off means and said second closing off means being of a size such that volumes of air beyond engaged portions of said external and internal splines, when said first and said second shafts are in a middle position between maximum retracted and extended positions during operation of the driveshaft, are substantially equal, whereby air need not be vented and added beyond the engaged portions of said external and internal splines when said first and said second universal joint yokes are moved toward and away from one another during operation of said driveshaft.

2. A driveshaft according to claim **1** wherein said annular lip of said first seal extends toward the open end of said sleeve to wipe contaminants off the inner surface of said sleeve, and said annular lip of said second seal extends in the opposite direction to prevent passage of lubricant thereby and to direct lubricant toward said first shaft.

3. A driveshaft according to claim **1** wherein one of said first and second closing off means comprises a retaining cup.

4. A driveshaft according to claim **1** wherein said second closing off means closing off said second shaft is a retaining cup affixed to an end of said second shaft toward said second universal joint yoke.

5. A driveshaft according to claim **1** wherein said first closing off means closing off said first shaft beyond said connecting passage means is a retaining cup affixed to an end of said first shaft toward said first universal joint yoke.

6. A driveshaft according to claim **1** wherein said second shaft is connected to said second universal joint yoke by a propeller shaft.

7. A driveshaft according to claim **1** wherein said first shaft is connected to said first universal joint yoke by a propeller shaft.

8. A driveshaft according to claim **1** wherein said second shaft is structurally integral with said second universal joint yoke.

9. A driveshaft according to claim **1** wherein said first and second seals are located in a band which is affixed to said second shaft.

10. A driveshaft comprising a first universal joint yoke, a second universal joint yoke spaced a varying distance from said first universal joint yoke when said driveshaft is in operation, a first shaft extending rearwardly of said first universal joint yoke and rotatable therewith, a second shaft extending rearwardly of said second universal joint yoke and rotatable therewith, said first shaft having external splines and said second shaft having internal splines which are in mechanical engagement with one another for all operating positions of said first and second universal joint yokes to enable slidable but nonrotatable movement between said first and said second shafts, said second shaft having sealing means extending therearound at an outer end portion thereof toward said first universal joint yoke, said sealing means having annular lip means extending outwardly from said second shaft around the outer end portion thereof, a sleeve extending rearwardly of said first universal joint yoke, having an open end facing said second universal joint yoke, and extending over at least a substantial portion of said first shaft, said sleeve having a diameter greater than the outer diameter of said second shaft and extending around an end portion of said second shaft, said annular lip means of said sealing means being in contact with the inner surface of said sleeve for all operating positions of said first and said second universal joint yokes for sealing off outside air, a bore in said first shaft extending completely therethrough, connecting passage means connecting said bore and space between said sleeve and said first shaft to enable the passage of air between said bore and the space between said sleeve and said first shaft when said first and said second shafts move toward and away from one another during operation of the driveshaft, first closing off means closing off said first shaft beyond said connecting passage means from outside air, and second closing off means closing off said second shaft at the end toward said second universal joint yoke from outside air during all stages of operation, one of said first closing off means and said second closing off means being of a size such that volumes of air beyond engaged portions of said external and internal splines, when said first and second shafts are in a middle position between maximum retracted and extended positions during operation of the driveshaft, are substantially equal, whereby air need not be vented and added beyond the engaged portions of said external and internal splines when said first and second universal joint yokes are moved toward and away from one another during operation of said driveshaft.

11. A driveshaft according to claim **10** wherein said annular lip means of said sealing means comprises two seals extending around the outer end portion of said second shaft, said two seals having base bands, said two seals having annular lips extending outwardly from said base bands in opposite directions.

12. A driveshaft according to claim **11** wherein one of said annular lips extends toward the open end of said sleeve to wipe contaminants off the inner surface of said sleeve, and the other of said annular lips extends in the opposite direction to prevent passage of lubricant thereby and to direct lubricant toward said first shaft.

13. A driveshaft according to claim **11** wherein said two seals are located in a band which is affixed to said second shaft.

14. A driveshaft according to claim **10** wherein said second closing off means closing off said second shaft is a retaining cup affixed to an end of said second shaft toward said second universal joint yoke.

15. A driveshaft according to claim **10** wherein said first closing off means closing off said first shaft beyond said

connecting passage means is a retaining cup affixed to an end of said first shaft toward said first universal joint yoke.

16. A driveshaft according to claim **10** wherein said second shaft is connected to said second universal joint yoke by a propeller shaft.

17. A driveshaft according to claim **10** wherein said first shaft is connected to said first universal joint yoke by a propeller shaft.

18. A driveshaft according to claim **10** wherein said second shaft is structurally integral with said second universal joint yoke.

19. A driveshaft according to claim **10** wherein one of said first and second closing off means comprises a retaining cup.

* * * * *

UNITED STATES PATENT AND TRADEMARK OFFICE

CERTIFICATE OF CORRECTION

PATENT NO. : 5,655,968

DATED : August 12, 1997

INVENTOR(S) : Robert A. Burton

It is certified that error appears in the above-identified patent and that said Letters Patent is hereby corrected as shown below:

Column 1, line 62, delete "," before "sleeve".

Column 3, line 10, change "S8" to --58--.

Signed and Sealed this

Twenty-fifth Day of November, 1997

Attest:

Attesting Officer

BRUCE LEHMAN

Commissioner of Patents and Trademarks