8518388

THE UNITED STATES OF AMERICA

TO ALL TO WHOM THESE PRESENTS SHALL COME:
UNITED STATES DEPARTMENT OF COMMERCE
United States Patent and Trademark Office

August 22, 2024

THIS IS TO CERTIFY THAT ANNEXED HERETO IS A TRUE COPY FROM THE RECORDS OF THIS OFFICE OF:

PATENT NUMBER: *11,434,958*
ISSUE DATE: *September 6, 2022*

By Authority of the
Under Secretary of Commerce for Intellectual Property
and Director of the United States Patent and Trademark Office

Sylvia Holley
Certifying Officer

US011434958B2

(12) **United States Patent**
Hopson et al.

(10) **Patent No.: US 11,434,958 B2**
(45) **Date of Patent: Sep. 6, 2022**

(54) **HIGH RETENTION FORCE SERVICEABLE PLUG-ON JOINT ASSEMBLY**

(71) Applicant: **NEAPCO INTELLECTUAL PROPERTY HOLDINGS, LLC,** Farmington Hills, MI (US)

(72) Inventors: **Michael Walter Hopson**, Clinton Township, MI (US); **Arvind Srinivasan**, Troy, MI (US); **Michael Peter Kinsella**, White Lake, MI (US)

(73) Assignee: **NEAPCO INTELLECTUAL PROPERTY HOLDINGS, LLC,** Farmington Hills, MI (US)

(*) Notice: Subject to any disclaimer, the term of this patent is extended or adjusted under 35 U.S.C. 154(b) by 736 days.

(21) Appl. No.: **15/966,085**

(22) Filed: **Apr. 30, 2018**

(65) **Prior Publication Data**

US 2018/0320742 A1 Nov. 8, 2018

Related U.S. Application Data

(60) Provisional application No. 62/500,821, filed on May 3, 2017.

(51) **Int. Cl.**

F16D 1/116	(2006.01)
F16B 21/18	(2006.01)
F16D 1/10	(2006.01)
F16D 3/223	(2011.01)

(52) **U.S. Cl.**

CPC ***F16D 1/116*** (2013.01); ***F16B 21/18*** (2013.01); ***F16B 21/186*** (2013.01); *F16D 2001/103* (2013.01); *F16D 2003/22326* (2013.01)

(58) **Field of Classification Search**

CPC F16D 1/108; F16D 1/112; F16D 1/116; F16D 2001/103; F16D 2003/22326; F16B 21/18; F16B 21/183; F16B 21/186; Y10T 403/7033; Y10T 403/7026; Y10T 403/31; F16J 15/52; F16J 15/525

See application file for complete search history.

(56) **References Cited**

U.S. PATENT DOCUMENTS

3,357,206 A * 12/1967 Christie F16D 3/841 464/112
3,992,117 A * 11/1976 Ristau F16D 1/116 403/14
4,124,318 A * 11/1978 Sagady F16B 21/18 403/14

(Continued)

FOREIGN PATENT DOCUMENTS

DE 10008182 A1 * 9/2001 ..... F16D 3/2237
DE 10008183 C1 * 12/2001 ..... B60B 27/00

(Continued)

Primary Examiner — Matthew R McMahon
(74) *Attorney, Agent, or Firm* — Shumaker, Loop & Kendrick, LLP; James D. Miller

(57) **ABSTRACT**

A joint assembly includes a first member having splines formed therein. A second member includes splines formed thereon and is coupled to the first member. The splines of the first member engage the splines of the second member. An access window is formed on the first member. A ring retains the first member to the second member. A portion of the ring is accessible through the access window, where the ring can be manipulated to release the first member from the second member.

18 Claims, 3 Drawing Sheets

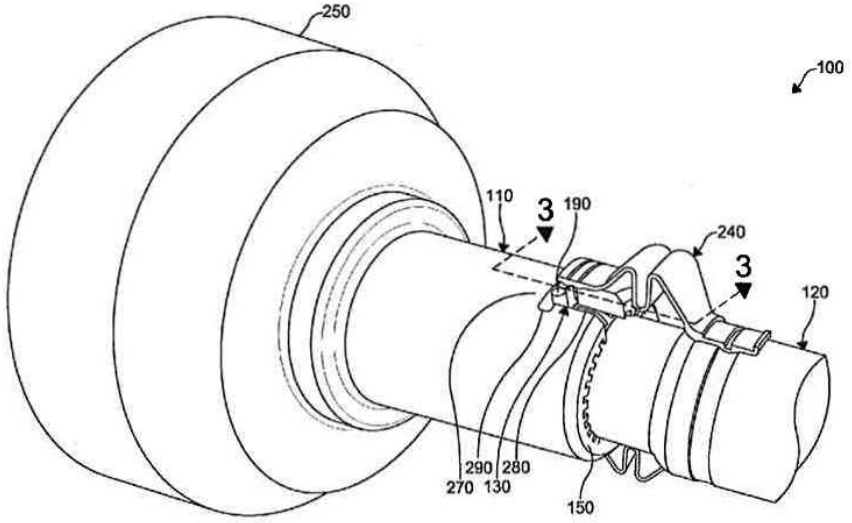

(56) **References Cited**

U.S. PATENT DOCUMENTS

4,136,982	A *	1/1979	Sagady	F16B 21/18 403/108
4,859,110	A *	8/1989	Dommel	F16B 21/165 403/325
6,251,019	B1	6/2001	Hofmann et al.	
6,582,151	B2 *	6/2003	Hopson	F16D 1/0894 403/359.5
6,739,422	B2 *	5/2004	Krude	B60B 27/00 180/256
7,722,089	B2 *	5/2010	Nauer	F16L 37/0885 285/308
7,922,590	B2	4/2011	Pallante	
7,946,374	B2 *	5/2011	Kofuji	F16D 1/10 180/226
8,092,312	B2 *	1/2012	Duncan	F16D 1/116 464/134
8,231,475	B2	7/2012	Felchner et al.	
8,690,690	B2 *	4/2014	Conger	F16D 1/116 464/146
8,864,591	B2 *	10/2014	Sugiyama	F16C 1/04 464/173
8,870,489	B2 *	10/2014	Langer	F16D 1/108 403/359.5
10,883,545	B2 *	1/2021	Sugiyama	F16D 1/0894
2009/0233723	A1 *	9/2009	Kofuji	F16D 1/10 464/158
2018/0003240	A1 *	1/2018	Sugiyama	F16D 1/0894

FOREIGN PATENT DOCUMENTS

EP	1681477	A1 *	7/2006	F16B 21/18
WO	WO-2016034228	A1 *	3/2016	F16D 1/116

* cited by examiner

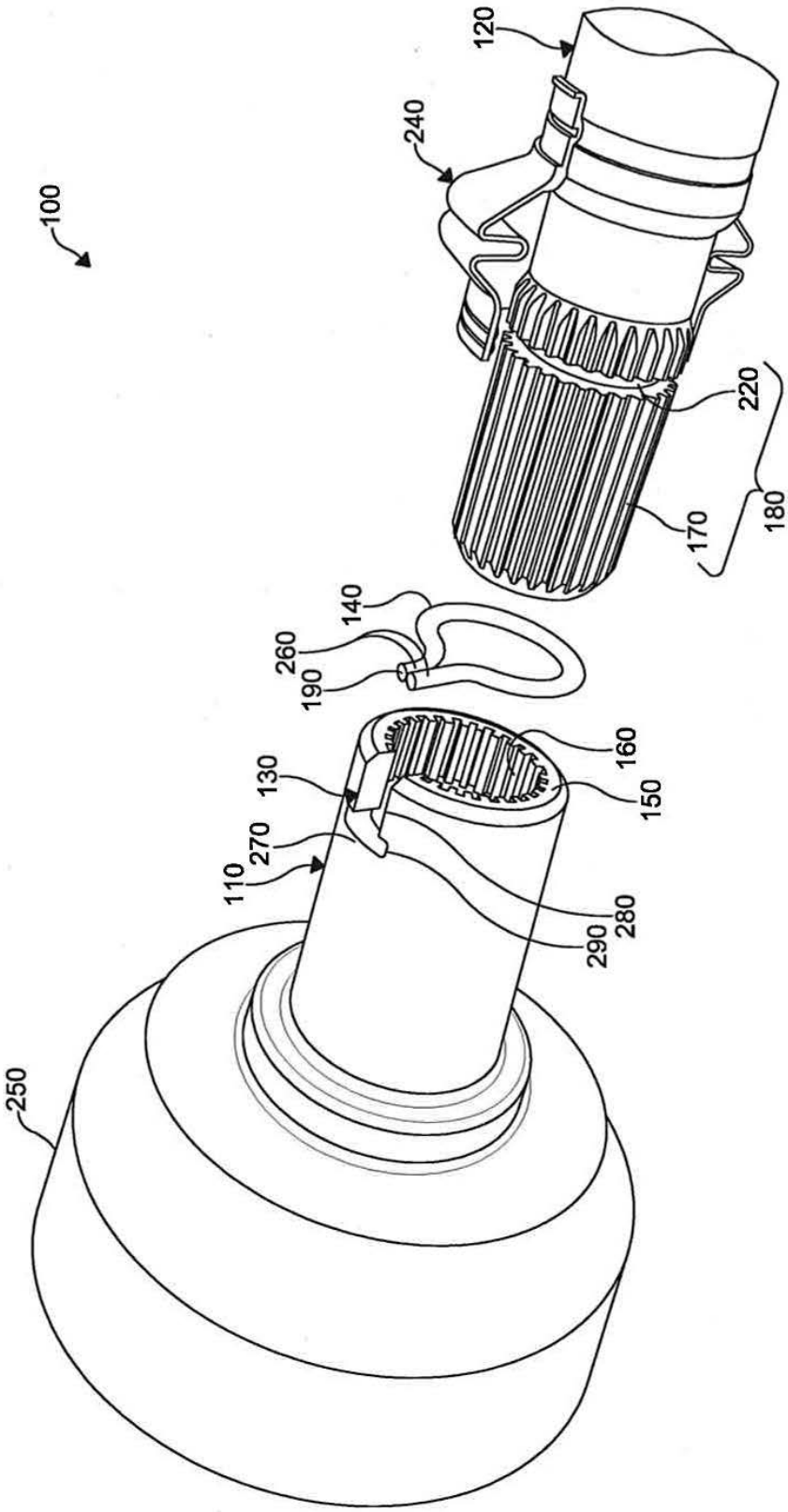
100
120
240
220
170
180
140
260
190
160
130
150
270
110
280
290
250

FIG. 1

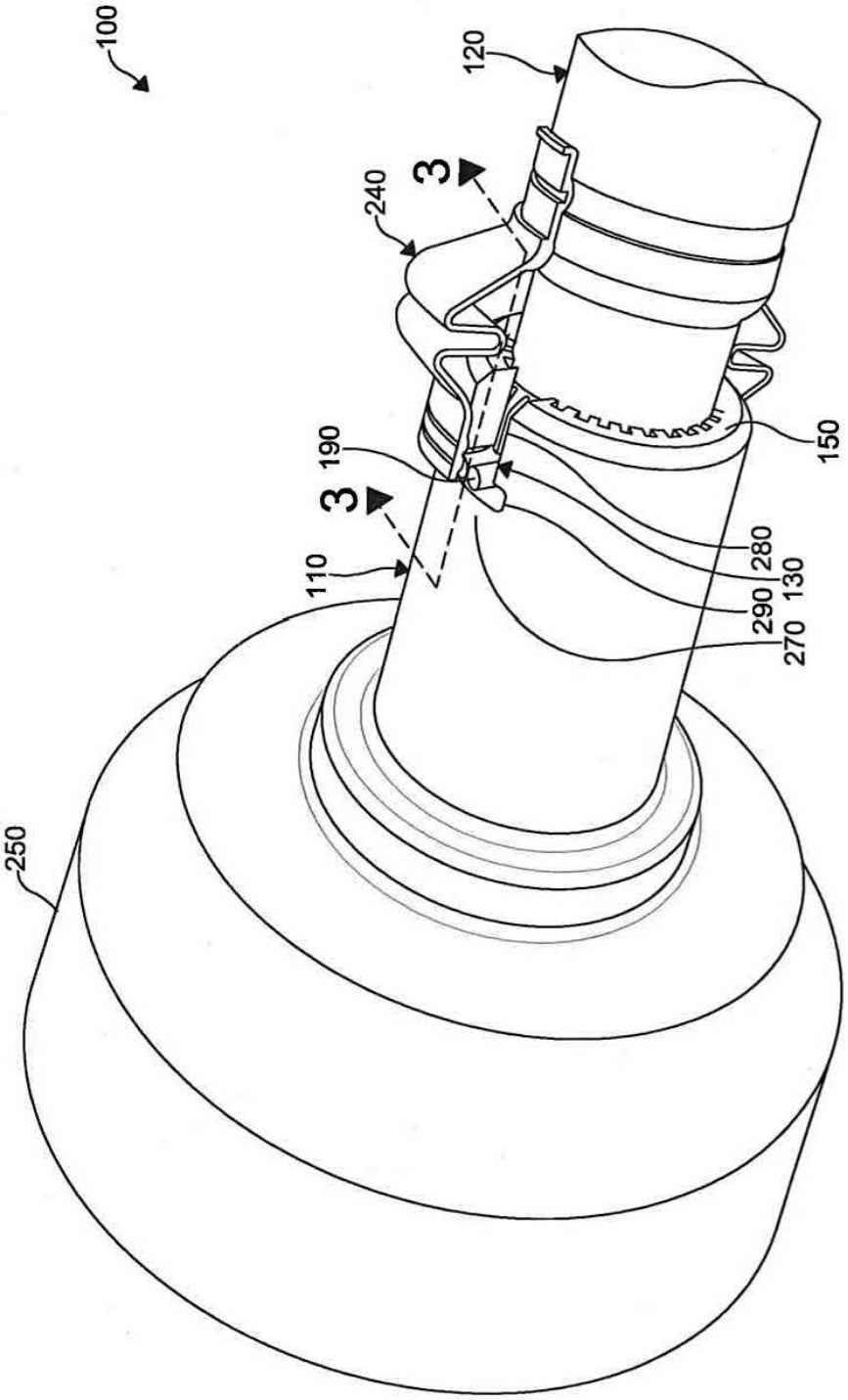

FIG. 2

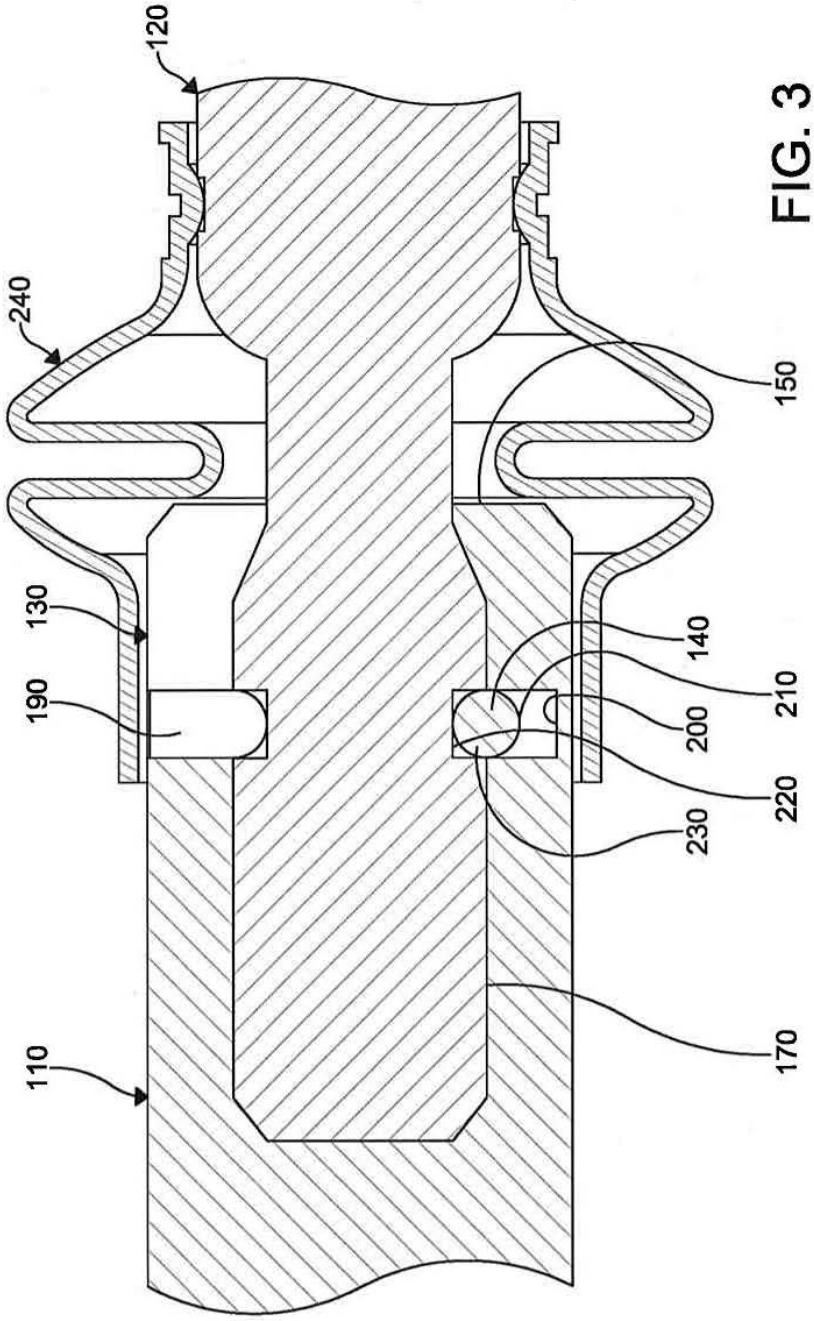

FIG. 3

HIGH RETENTION FORCE SERVICEABLE PLUG-ON JOINT ASSEMBLY

CROSS-REFERENCE TO RELATED APPLICATIONS

This application claims the benefit of U.S. Provisional Application No. 62/500,821, filed on May 3, 2017. The entire disclosure of the above application is incorporated herein by reference.

FIELD

The present technology relates to joint assemblies, particularly to a propeller shaft constant velocity joint with a plug-on interface that provides a high retention force and service access for disassembly thereof.

INTRODUCTION

This section provides background information related to the present disclosure which is not necessarily prior art.

Joint assemblies, including various universal and constant velocity joints, are common components in automotive vehicles for applications requiring a transmission of torque through an angle. Universal joints can be used to join portions of a driveshaft. Constant velocity joints (CV joints or CVJs) are typically used to transmit torque at an angle from a powertrain transmission (transmission or four wheel drive system, for example) of a vehicle to final drive components with a constant velocity or speed.

One type of CV joints are referred to as plug-on CV joints. Plug-on CV joints are used for attachment of a drive or propeller shaft of the vehicle to the powertrain or to the final drive components without requiring the use of threaded fasteners or bolts to secure the joints. Typically, the plug-on CV joint includes an outer joint member and an inner joint member. Internal splines formed on either the inner joint member or the outer joint member couple with external splines formed on the powertrain or a final drive component shaft and secured with an expanding snap ring. The snap ring secures or locks the CV joint axially when corresponding grooves of the internal splines and the external splines are aligned.

Generally, the plug-on CV joints are used for vehicles such as passenger cars and light truck applications having independent suspensions, wherein the drivelines are not subjected to high cyclic axial thrust loading incurred from rapid movement of live beam axles. Disadvantageously, the snap rings used to axially retain or lock the CV joint to the powertrain or final drive components are entirely covered and not easily accessible after assembly. As a result, the snap ring is not easily accessible for disassembly or disengagement with tools during maintenance. To overcome this disadvantage, the snap ring and corresponding grooves are configured to permit forced disassembly with pry tools employing relatively minimal axial loads, generally less than about 500 pounds.

However, these plug-on CV joints with the snap ring are unable to withstand higher thrust loads applied to the driveline on live beam axle applications, while still permitting easy access to the snap ring for maintenance.

It would be desirable to provide a robust plug-on CV joint configured for maximized axial retention of the CV joint to a powertrain or final drive components while maximizing an ease of maintenance thereof.

SUMMARY

The present technology includes articles of manufacture, systems, and processes that relate to a joint assembly, including a robust plug-on CV joint, which is configured for maximized axial retention of the plug-on CV joint to a powertrain or final drive component while maximizing an ease of maintenance thereof. The joint assembly can include a joint having splines formed therein and a shaft having splines formed thereon coupled to the joint, where the splines of the shaft engage the splines of the joint. An access window is formed on the joint and a ring retains the shaft to the joint, where a portion of the ring is accessible through the access window.

In certain embodiments, a joint assembly is provided that includes a first member, a second member, a window, and a retaining means. The first member has a first engagement means and the second member has a second engagement means. A portion of the second member is disposed within the first member, where the second engagement means engages the first engagement means to provide a coupling of the second member to the first member. The window is formed within the first member where the portion of the second member is disposed within the first member. The retaining means is configured to retain the coupling of the second member to the first member, where at least a portion of the retaining means is accessible through the window. A joint, such as a constant velocity joint, can be coupled to one of the first member and the second member.

In certain embodiments, a joint assembly is provided that includes a first member, a second member, a window, and a retaining ring. The first member has an open end and a first plurality of splines formed within the open end. The second member has a second plurality of splines formed thereon. A portion of the second member is disposed within the first member, where the second plurality of splines engages the first plurality of splines to provide a coupling of the second member to the first member. The window is formed within the first member where the portion of the second member is disposed within the first member. The retaining ring is configured to retain the coupling of the second member to the first member and a portion of the retaining ring is accessible through the window. The first member includes an interior surface annular recess that receives a portion of the retaining ring and the second member includes an exterior surface annular recess that receives another portion of the retaining ring.

In certain embodiments, a method of servicing a joint assembly is provided that includes manipulating the retaining means through the window to release the coupling of the second member to the first member. The first member and the second member are then separated by disengaging the second engagement means from the first engagement means. In this way, one of the first member and the second member can be replaced with another of the first member and the second member to form another joint assembly.

Further areas of applicability will become apparent from the description provided herein. The description and specific examples in this summary are intended for purposes of illustration only and are not intended to limit the scope of the present disclosure.

DRAWINGS

The drawings described herein are for illustrative purposes only of selected embodiments and not all possible implementations, and are not intended to limit the scope of the present disclosure.

FIG. **1** is an exploded perspective view of an embodiment of a joint assembly according to the present technology.

FIG. **2** is an assembled perspective view of the embodiment of the joint assembly of FIG. **1**.

FIG. **3** is a fragmentary cross-sectional view of the joint assembly taken along plane **3-3** in FIG. **2**.

DETAILED DESCRIPTION

The following description of technology is merely exemplary in nature of the subject matter, manufacture and use of one or more inventions, and is not intended to limit the scope, application, or uses of any specific invention claimed in this application or in such other applications as may be filed claiming priority to this application, or patents issuing therefrom. Regarding methods disclosed, the order of the steps presented is exemplary in nature, and thus, the order of the steps can be different in various embodiments. "A" and "an" as used herein indicate "at least one" of the item is present; a plurality of such items may be present, when possible. Except where otherwise expressly indicated, all numerical quantities in this description are to be understood as modified by the word "about" and all geometric and spatial descriptors are to be understood as modified by the word "substantially" in describing the broadest scope of the technology. "About" when applied to numerical values indicates that the calculation or the measurement allows some slight imprecision in the value (with some approach to exactness in the value; approximately or reasonably close to the value; nearly). If, for some reason, the imprecision provided by "about" and/or "substantially" is not otherwise understood in the art with this ordinary meaning, then "about" and/or "substantially" as used herein indicates at least variations that may arise from ordinary methods of measuring or using such parameters.

All documents, including patents, patent applications, and scientific literature cited in this detailed description are incorporated herein by reference, unless otherwise expressly indicated. Where any conflict or ambiguity may exist between a document incorporated by reference and this detailed description, the present detailed description controls.

Although the open-ended term "comprising," as a synonym of non-restrictive terms such as including, containing, or having, is used herein to describe and claim embodiments of the present technology, embodiments may alternatively be described using more limiting terms such as "consisting of or" "consisting essentially of." Thus, for any given embodiment reciting materials, components, or process steps, the present technology also specifically includes embodiments consisting of, or consisting essentially of, such materials, components, or process steps excluding additional materials, components or processes (for consisting of) and excluding additional materials, components or processes affecting the significant properties of the embodiment (for consisting essentially of), even though such additional materials, components or processes are not explicitly recited in this application. For example, recitation of a composition or process reciting elements A, B and C specifically envisions embodiments consisting of, and consisting essentially of, A, B and C, excluding an element D that may be recited in the art, even though element D is not explicitly described as being excluded herein.

The present technology relates to joint assemblies, including those having various joints or couplings, including universal joints or constant velocity joints and shafts, which can be used in vehicle transmissions and drivelines. Although examples are provided herein with reference to CV joints, the present technology can apply to other types of joint assemblies used in other applications. Joint assemblies according to the present disclosure are configured to facilitate a transmission of rotational forces and torque between components, such as driveline components of a vehicle. Such joint assemblies provide a robust plug-on joint configured for maximized axial retention of the joint to a powertrain or final drive component while maximizing an ease of maintenance thereof.

A joint assembly is provided having a first member with a first engagement means, a second member with a second engagement means, a window formed within the first member, and a retaining means configured to retain the coupling of the second member to the first member. A portion of the second member is disposed within the first member so that the second engagement means engages the first engagement means to provide a coupling of the second member to the first member. The window formed within the first member is located where the portion of the second member is disposed within the first member. A portion of the retaining means is accessible through the window.

Other aspects of the joint assembly include where the first member can include an open end and the first engagement means of the first member can be formed within the open end. In this case, the portion of the second member disposed within the first member can accordingly be disposed within the open end, where the portion of the second member disposed within the first member can also include the second engagement means. The window can be continuous with the open end. That is, the window can provide a pathway from the open end of the first member down a length of a side of the first member. The first engagement means and the second engagement means can be configured to couple the first member and second member in various ways, including various fasteners, keys and keyways, male-female couplings, interlocking features, and so on. In certain embodiments, the first engagement means can include a first plurality of splines and the second engagement can include a second plurality of splines. The first plurality of splines and the second plurality of splines can be complementary, where one can be a set of male splines and the other a set of female splines.

Further aspects of the joint assembly include where the first member has an interior surface recess that receives a portion of the retaining means and the second member has an exterior surface recess that receives another portion of the retaining means. The retaining means can be configured as a retaining ring configured to operate within an interior surface annular recess and an exterior surface annular recess. The joint assembly can include a seal configured to cover the window. In this way, the seal can prevent unwanted material, such as dust or debris, from entering the window. The seal can be moved to uncover the window, allowing access to the retaining means.

The joint assembly can include a joint designed to transmit rotary motion across a static or variable angle. Examples include where a constant velocity joint is coupled to one of the first member and the second member of the joint assembly. In this way, the joint assembly can be configured as a snap-on constant velocity joint. The joint can be configured as a tripod-type or ball-type constant velocity joint. However, it is understood that the joint can be configured as any constant velocity joint or joint assembly of any type having an inner joint member and an outer joint member, as desired. Additional examples of a joint that can be used in the present technology include various universal

joints, Cardan joints, double Cardan joints, Tracta joints, Rzeppa joints, Weiss joints, and Thompson couplings. Particular examples of various types of joints further include those described in U.S. Pat. Nos. 6,739,422, 6,251,019, 7,922,590, and 8,231,475. The joint assembly can be configured as part of or coupled to a transfer case, transmission output shaft, axle pinion shaft, drive shaft or propeller shaft. The joint assembly can be configured for use with half-shaft inboard joints or wheel end or outboard joints or any other joints as desired. It is to be understood that the joint assembly can be employed with any rotational members configured for transmitting torque from one component to another component. Additional examples include a vehicle driveline comprising one or more of the joint assemblies provided herein and include a vehicle comprising one or more of the joint assemblies provided herein.

A configuration of joint assemblies according to the present technology optimizes the serviceability thereof. In particular, methods of servicing a joint assembly are provided with respect to the joint assemblies described herein. Such methods include manipulating the retaining means through the window to release the coupling of the second member to the first member. The first member and the second member are then separated by disengaging the second engagement means from the first engagement means. Where the joint assembly further includes a seal configured to cover the window, the method can further comprise uncovering the window from the seal prior to manipulating the retaining means through the window to release the coupling of the second member to the first member. Servicing the joint assembly can also include coupling the separated first member with another second member to form another joint assembly or coupling the separated second member with another first member to form another joint assembly. For example, a damaged member can be easily replaced in this fashion, a different type of joint installed, or the configuration of the joint assembly can be changed by including a member having different dimensions and/or operational properties. The method can also include replacing the retaining means with another retaining means and coupling the separated first member with the separated second member to reform the joint assembly. For example, different retaining means can be swapped in and out that have different retention properties and/or thrust load limits.

The present technology therefore provides a plug-on CV joint with more robust retaining ring locking that can withstand significantly higher thrust loads applied to the driveline on live beam axle applications, while still allowing disassembly for field service repairs. To accomplish this, a more robust retaining ring retention system can provide at least 1,500 lb of retention force to prevent unseating or disassembly during vehicle use on live beam axle driveline applications. The snap ring may be thicker, have sharper corners, or use deeper grooves in the corresponding splined components in order to increase axial retention force.

To maintain the ability to disassemble the CV joint for field service repairs, the retaining ring can contain outward facing tabs and an access window on the internally splined outer race extension to allow access to the tabs for the purpose of unseating the retaining ring for disassembly without the use of heavy prying tools and permanently damaging components.

EXAMPLE

With reference now to FIGS. **1-3**, an embodiment of a joint assembly according to the present technology is shown at **100**.

The joint assembly **100** includes a first member **110**, a second member **120**, a window **130**, and a retaining ring **140**. The first member **110** has an open end **150** and a first plurality of splines **160** formed within the open end **150**. The second member **120** has a second plurality of splines **170** formed thereon. A portion **180** of the second member **120** is disposed within the open end **150** of the first member **110**, where the second plurality of splines **170** engages the first plurality of splines **160** to provide a coupling of the second member **120** to the first member **110**. The window **130** is formed within the first member **110** where the portion **180** of the second member **120** is disposed within the first member **110**. The retaining ring **140** is configured to retain the coupling of the second member **120** to the first member **110**. A portion **190** of the retaining ring **140** is accessible through the window **130**. The first member **110** includes an interior surface annular recess **200** that receives a portion **210** of the retaining ring **140** and the second member **120** includes an exterior surface annular recess **220** that receives another portion **230** of the retaining ring **140**. The joint assembly **100** includes a seal **240** configured to cover the window **130** when the joint assembly **100** is assembled. As shown, the seal **240** can be coupled to the second member **120** and configured to be slidably disposed over the first member **110**. A joint **250**, such as a constant velocity joint, is coupled to the first member **110**; however, the joint **250** could be coupled to the second member **120**. It is also possible to have the joint **250** coupled to one of the first member **110** and the second member **120** and have another joint (not shown) coupled to the other of the first member **110** and the second member **120**.

As shown, the first member **110** includes internal splines **160** and the second member **120** includes external splines **170**, but other engagement means can be employed to couple the first member **110** and second member **120**. The retaining ring **140** is configured as a discontinuous annular expandable snap ring, where ends **260** of the retaining ring **140** form a portion **190** that is accessible through the window **130**. The ends **260** can be biased towards or away from each other to permit expansion of the retaining ring **140** within the interior surface annular recess **200** of the first member **110** when the second member **120** is received within the open end **150** of the first member **110** and contraction of the retaining ring **140** when positioned within the exterior surface annular recess **220** of the second member **120**.

The window **130** is formed in an outer surface **270** of the first member **110** and receives the portion **190** of the retaining ring **140** that is accessible therethrough. As shown, the window **130** can be T-shaped, where a first portion **280** of the window **130** is continuous with the open end **150** of the first member **110** and a wider second portion **290** extends laterally from the first portion **280** along a circumference of the outer surface **270** of the first member **110**. It can be seen that the first portion **280** of the window **130** can have a width that is less than a width of the second portion **290**. The ends **260** of the retaining ring **140** extend into the window **130** to permit manipulation thereof, including contraction of the retaining ring **140** to release the coupling of the first member **110** to the second member **120** and permit separation of the first member **110** and the second member **120** by disengaging the second plurality of splines **170** from the first plurality of splines **160**.

The seal **240** can be configured as a boot for sealing not only the window **130**, but also the interface of the first member **110** with respect to the second member **120**. Additional sealing means can be employed (not shown), where the seal **240** can work in conjunction with one or more

O-rings or compression devices, such as spring clamps, wire clamps, and ear clamps. More than one seal **240** can be used, as well.

To assemble the joint assembly **100**, the retaining ring **140** can be positioned within the open end **150** of the first member **110** at the interior surface annular recess **200**, which can be formed on the first plurality of splines **160**. To position the retaining ring **140**, the portion **190** including the ends **260** is slidingly received through the first portion **280** of the window **130** until the ends **260** are positioned within the wider second portion **290**. The second member **120** is received within the open end **150** of the first member **110**, where the internal first plurality of splines **160** engages the external second plurality of splines **170**. As the second member **120** is received in the open end **150**, the second member **120** is consequently received through the retaining ring **140**. The retaining ring **140** expands or is expanded as the second member **120** passes therethrough until the retaining ring **140** can contract and engage the exterior surface annular recess **220** formed on the second member **120**. The wider second portion **290** of the window **130** permits the ends **260** of the retaining ring **140** to expand as the second member **120** passes therethrough. Once the retaining ring **140** is positioned within the exterior surface annular recess **220** formed on the second member **120**, the first member **110** is retained or locked to the second member **120** to militate against an undesired axial displacement of the first member **110** with respect to second member **120**. The retaining ring **140** can be configured to accommodate substantial thrust loads while also remaining accessible to manipulation and release thereof. The seal **240** can then be positioned to cover the interface of the first member **110** and the second member **120**, including the window **130**.

Advantageously, during servicing or maintenance of the joint assembly **100**, the window **130** permits easy access to the retaining ring **140**, where a tool can be employed to expand the retaining ring **140** for ease of separation of the first member **110** and the second member **120**. The joint assembly **100** of the present technology, for example, can facilitate at least 1,500 pounds of retention force to militate against unseating or disassembly of the first member **110** from the second member **120**, including where the joint assembly **100** is used in vehicles having live beam axle driveline applications. It is understood that other retention force amounts can be used as desired. The retaining ring **140** configuration of the present technology is more robust than other configurations, while being easily accessible and ergonomically configured for maintenance purposes. The retaining ring **140** can be thicker and/or stronger than other retaining devices or rings known in the art. The retaining ring **140** have also be configured with abrupt or sharp corners formed thereon for enhanced engagement to the interior surface annular recess **200** and/or the exterior surface annular recess **220**, which can facilitate maximized retention force. Additionally, the interior surface annular recess **200** and/or the exterior surface annular recess **220** can have a depth greater than other grooves used with retaining rings, which can further facilitate maximized retention force. The retaining ring **140** can have alternate cross-sectional shapes such as circular, square, rectangular, or elliptical, for example, or any other shape as desired, and the interior surface annular recess **200** and/or the exterior surface annular recess **220** can have a corresponding cross-sectional shape. Varying cross-sectional shapes and thicknesses of the retaining ring **140** as well as the cross-sectional shape, sharpness of corners of, and depth of the interior surface annular recess **200** and/or the exterior surface annular recess **220** can be dependent on the retention force required for a desired application.

It is also possible to have the retaining ring **140** preinstalled on the interior surface annular recess **200** formed on the internal first plurality of splines **160** of the first member **110**. However, where the second member **120** includes the external second plurality of splines **170**, the retaining ring **140** may be preinstalled in the exterior surface annular recess **220** formed on the external splines **170** of the second member **120**. Furthermore, the retaining ring **140** can be configured to require spreading the ends **260** apart from each other to disassemble the the first member **110** and second member **120**, as shown, or the retaining ring **140** can be configured to require a pinching or closing of the ends **260** with respect to each other to disassemble the first member **110** and second member **120**.

Example embodiments are provided so that this disclosure will be thorough, and will fully convey the scope to those who are skilled in the art. Numerous specific details are set forth such as examples of specific components, devices, and methods, to provide a thorough understanding of embodiments of the present disclosure. It will be apparent to those skilled in the art that specific details need not be employed, that example embodiments may be embodied in many different forms, and that neither should be construed to limit the scope of the disclosure. In some example embodiments, well-known processes, well-known device structures, and well-known technologies are not described in detail. Equivalent changes, modifications and variations of some embodiments, materials, compositions and methods can be made within the scope of the present technology, with substantially similar results.

What is claimed is:

1. A joint assembly comprising:

a first member having a first engagement means and an interior surface recess;

a second member having a second engagement means and an exterior surface recess, a portion of the second member disposed within the first member, the second engagement means engaging the first engagement means to provide a coupling of the second member to the first member;

a window formed within the first member where the portion of the second member is disposed within the first member;

a retaining means configured to retain the coupling of the second member to the first member, wherein distal ends of the retaining means are accessible through the window, wherein the distal ends of the retaining means extend in a direction radially outwardly into the window to a point at or radially inwardly from an outer wall of the first member, and wherein the retaining means is received partially into each of the interior surface recess of the first member and the exterior surface recess of the second member when the retaining means retains the coupling of the second member to the first member; and

a seal configured to cover the window, the seal coupled to the second member adjacent an end of the first member, the seal coupled to the first member adjacent the window, wherein a cylindrical portion of the seal covers the outer wall of the first member along at least a portion of a perimeter of the window, wherein the seal further includes a corrugated portion disposed adjacent

the cylindrical portion, and wherein the corrugated portion is spaced radially from each of the first member and the second member.

2. The joint assembly of claim **1**, wherein the first member includes an open end and the first engagement means of the first member is formed within the open end.

3. The joint assembly of claim **2**, wherein the portion of the second member disposed within the first member is disposed within the open end and includes the second engagement means.

4. The joint assembly of claim **2**, wherein the window is continuous with the open end.

5. The joint assembly of claim **1**, wherein the first engagement means includes a first plurality of splines and the second engagement means includes a second plurality of splines.

6. The joint assembly of claim **1**, wherein the retaining means is configured as a retaining ring.

7. The joint assembly of claim **1**, further comprising a constant velocity joint coupled to one of the first member and the second member.

8. The joint assembly of claim **1**, wherein the cylindrical portion of the seal is disposed directly radially outwardly of the retaining means when the retaining means retains the coupling of the second member to the first member.

9. The joint assembly of claim **1**, wherein the window is continuous with an open end of the first member, and wherein the corrugated portion of the seal is disposed directly radially outwardly of the open end of the first member.

10. The joint assembly of claim **1**, wherein the cylindrical portion of the seal is disposed at an end of the seal.

11. A vehicle driveline comprising the joint assembly of claim **1**.

12. A vehicle comprising the joint assembly of claim **1**.

13. A joint assembly comprising:

a first member having an open end and a first plurality of splines formed within the open end;

a second member having a second plurality of splines formed thereon, a portion of the second member disposed within the first member, the second plurality of splines engaging the first plurality of splines to provide a coupling of the second member to the first member;

a window formed within the first member where the portion of the second member is disposed within the first member;

a retaining ring configured to retain the coupling of the second member to the first member, wherein distal ends of the retaining ring are accessible through the window, the first member including an interior surface annular recess and the second member including an exterior surface annular recess, wherein the retaining ring is received partially into each of the interior surface recess of the first member and the exterior surface recess of the second member when the retaining ring retains the coupling of the second member to the first member, and wherein the distal ends of the retaining ring extend in a direction radially outwardly into the window to a point at or radially inwardly from an outer wall of the first member; and

a seal configured to cover the window, the seal coupled to the second member adjacent the open end of the first member, the seal coupled to the first member adjacent the window, wherein a cylindrical portion of the seal covers the outer wall of the first member along at least a portion of a perimeter of the window, wherein the seal further includes a corrugated portion disposed adjacent the cylindrical portion, and wherein the corrugated portion is spaced radially from each of the first member and the second member.

14. The joint assembly of claim **13**, further comprising a constant velocity joint coupled to one of the first member and the second member.

15. A method of servicing a joint assembly comprising:

providing the joint assembly, the joint assembly including;

a first member having a first engagement means and an interior surface recess;

a second member having a second engagement means and an exterior surface recess, a portion of the second member disposed within the first member, the second engagement means engaging the first engagement means to provide a coupling of the second member to the first member;

a window formed within the first member where the portion of the second member is disposed within the first member;

a retaining means configured to retain the coupling of the second member to the first member, wherein distal ends of the retaining means are accessible through the window, wherein the distal ends of the retaining means extend in a direction radially outwardly into the window to a point at or radially inwardly from an outer wall of the first member, and wherein the retaining means is received partially into each of the interior surface recess of the first member and the exterior surface recess of the second member when the retaining means retains the coupling of the second member to the first member; and

a seal configured to cover the window, the seal coupled to the second member adjacent an end of the first member, the seal coupled to the first member adjacent the window, wherein a cylindrical portion of the seal covers the outer wall of the first member along at least a portion of a perimeter of the window, wherein the seal further includes a corrugated portion disposed adjacent the cylindrical portion, and wherein the corrugated portion is spaced radially from each of the first member and the second member;

uncovering the window from the cylindrical portion of the seal to provide access to the distal ends of the retaining means,

manipulating the distal ends of the retaining means through the window to release the coupling of the second member to the first member; and

separating the first member and the second member by disengaging the second engagement means from the first engagement means.

16. The method of servicing the joint assembly of claim **15**, wherein the joint assembly further comprises a constant velocity joint coupled to one of the first member and the second member.

17. The method of servicing the joint assembly of claim **15**, further comprising coupling the separated first member with another second member to form another joint assembly.

18. The method of servicing the joint assembly of claim **15**, further comprising coupling the separated second member with another first member to form another joint assembly.

* * * * *