US007896750B2

(12) **United States Patent**
Brunetti et al.

(10) **Patent No.: US 7,896,750 B2**
(45) **Date of Patent: Mar. 1, 2011**

(54) **SEALING ARRANGEMENT BETWEEN A CONSTANT VELOCITY JOINT AND A HUB BEARING UNIT OF A MOTOR VEHICLE WHEEL**

(75) Inventors: **Marco Brunetti**, Turin (IT); **Cristian Concu**, Turin (IT)

(73) Assignee: **Aktiebolaget SKF**, Gothenburg (SE)

(*) Notice: Subject to any disclaimer, the term of this patent is extended or adjusted under 35 U.S.C. 154(b) by 542 days.

(21) Appl. No.: **11/968,522**

(22) Filed: **Jan. 2, 2008**

(65) **Prior Publication Data**

US 2008/0174112 A1 Jul. 24, 2008

(30) **Foreign Application Priority Data**

Jan. 4, 2007 (EP) 07100093

(51) **Int. Cl.**
F16D 3/84 (2006.01)

(52) **U.S. Cl.** **464/173**; 464/178

(58) **Field of Classification Search** 464/173, 464/178, 906; 384/544, 589; 277/634
See application file for complete search history.

(56) **References Cited**

U.S. PATENT DOCUMENTS

6,139,216	A *	10/2000	Bertetti	464/906
6,354,952	B1	3/2002	Boulton et al.	
7,270,483	B2 *	9/2007	Ishiguro	384/544 X
2002/0070506	A1	6/2002	Krude	

FOREIGN PATENT DOCUMENTS

EP	1 308 315 A2	5/2003
EP	1 548 307 A1	6/2005
JP	2001-150905	6/2001

* cited by examiner

Primary Examiner—Greg Binda
(74) *Attorney, Agent, or Firm*—Merchant & Gould P.C.

(57) **ABSTRACT**

One end of a resilient sleeve is fitted on a tubular projection of the bell of a constant velocity joint. The sleeve covers a radial slot formed in the projections and the arms of a spring locking ring for axially removably securing the joint bell to a toothed driving ring fixed on a rotatable hub. The other end of the sleeve has a radially inwardly projecting flange which is sealingly axially clamped against a rigid annular part secured to or integral with the hub.

6 Claims, 4 Drawing Sheets

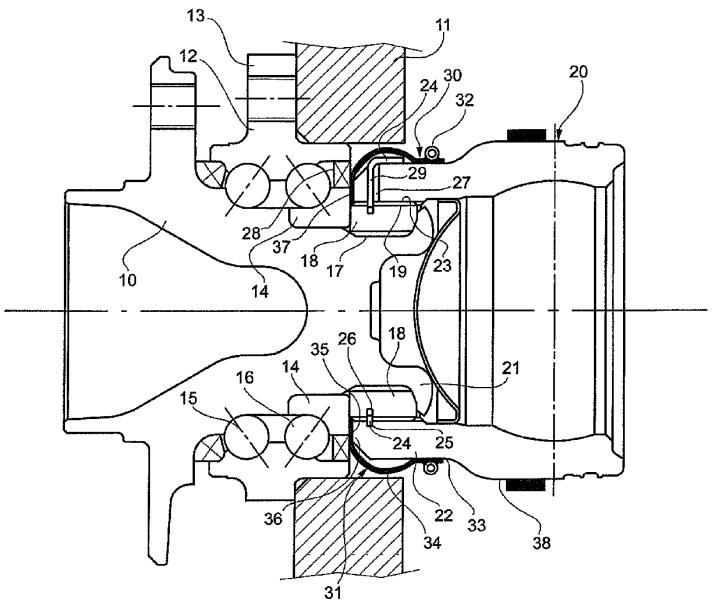

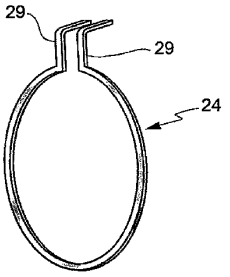

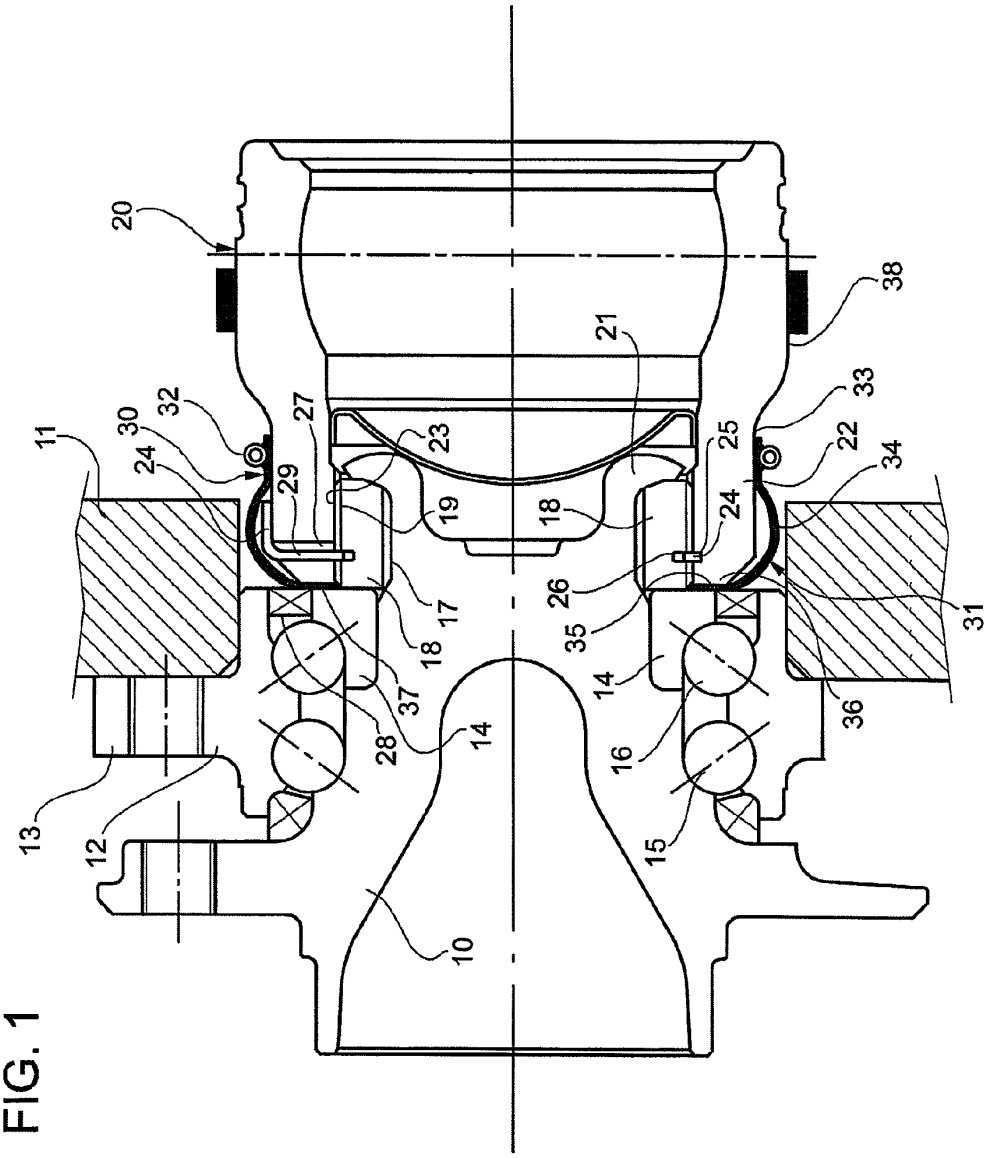
20
38
21
33
32
30
27
23
25
22
11
24
29
19
18
24
34
26
17
35
31
18
37
14
36
28
14
16
13
12
15
10

FIG. 1

FIG. 3

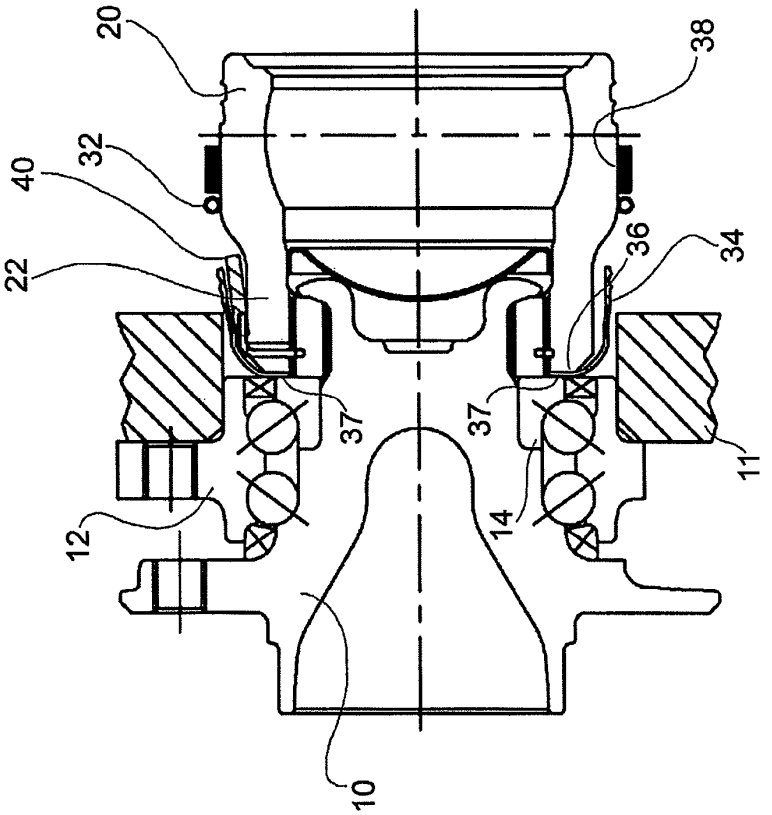
20
38
40
32
22
36
34
37
37
11
12
14
10

FIG. 2

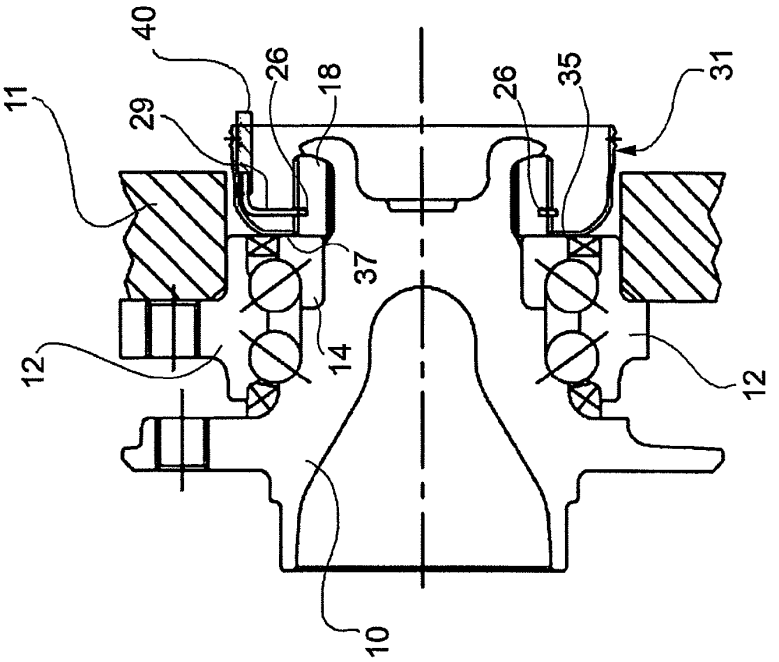
40
26
18
26
35
31
11
29
37
12
14
12
10

FIG. 4

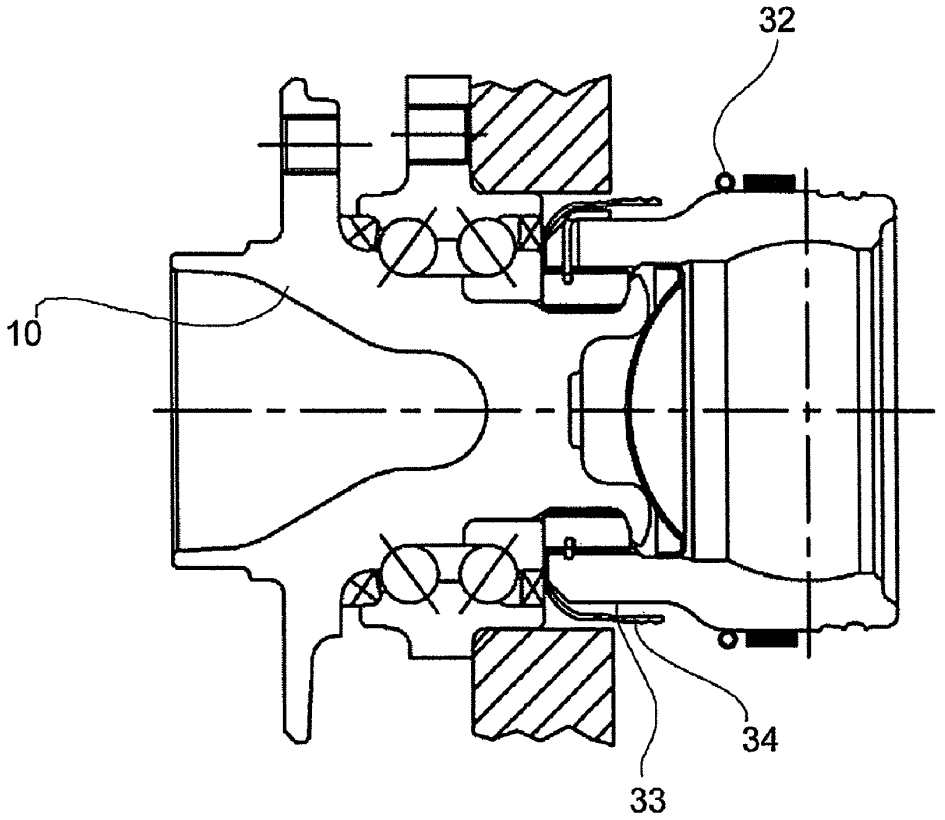

FIG. 6

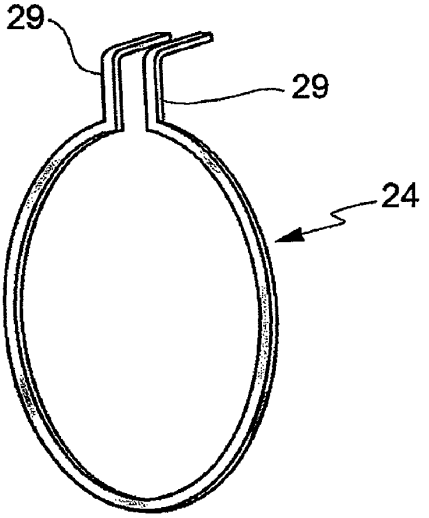

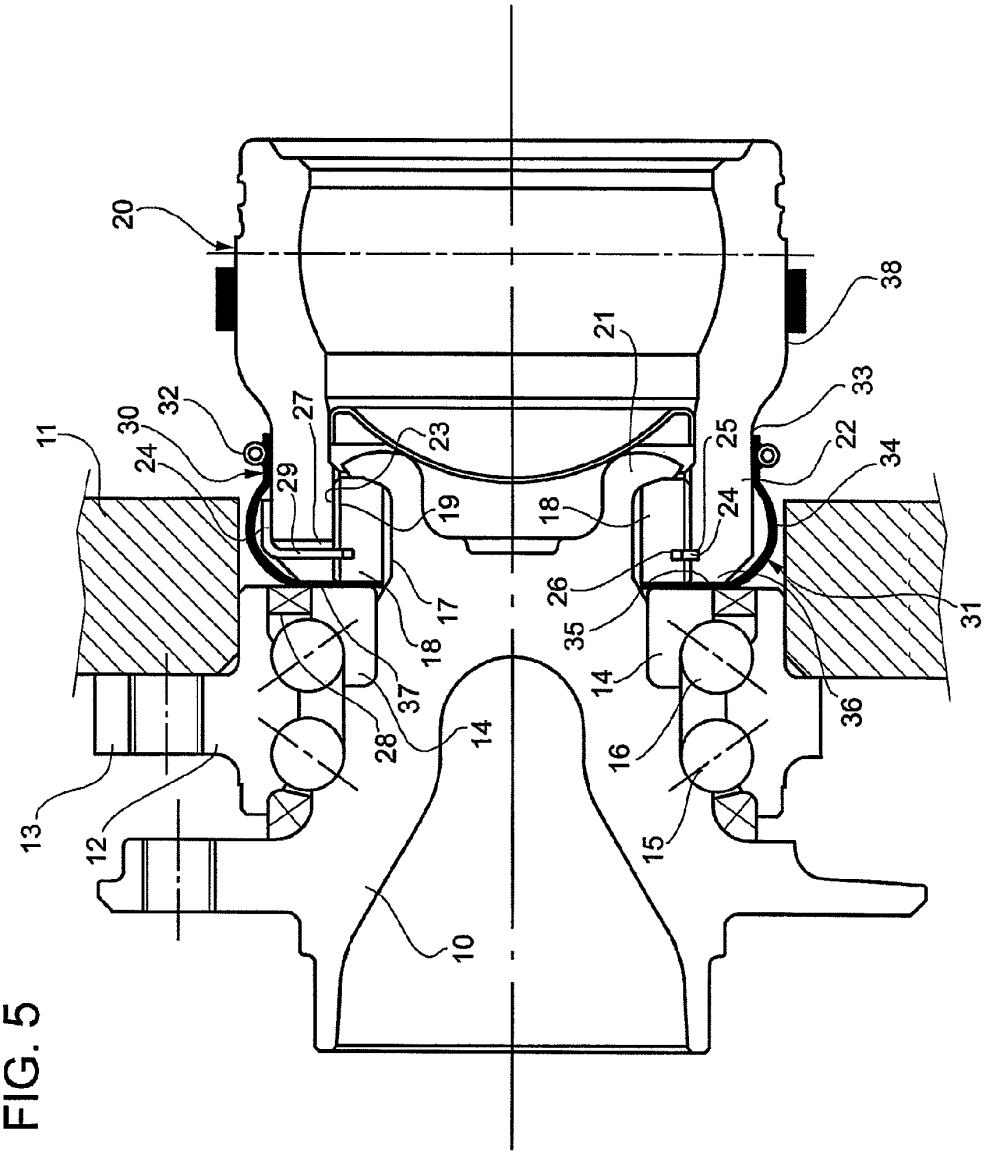
20
38
21
33
32
30
27
23
25
22
34
11
24
29
19
18
24
26
17
35
31
18
37
14
36
28
14
16
13
12
15
10

FIG. 5

SEALING ARRANGEMENT BETWEEN A CONSTANT VELOCITY JOINT AND A HUB BEARING UNIT OF A MOTOR VEHICLE WHEEL

BACKGROUND OF THE INVENTION

The present invention refers to a sealing arrangement for the coupling zone between a constant velocity joint and a hub bearing unit of a motor vehicle wheel.

Arrangements are known from patent publications US 2002/0070506 A1 and U.S. Pat. No. 6,354,952 B1 wherein the hub of the wheel receives the driving torque from the bell of the constant velocity joint through a splined coupling. To this end, fixed on the hub is a ring with an axial outer toothing that is inserted in a tubular projection with an inner axial toothing of the outer part or "bell" of the constant velocity joint. The toothed ring and the tubular projection are both provided with a respective circular groove in which an elastic, open locking ring is fitted. This elastic ring has arms at its ends that project through a slot formed at the axially outer end (or outboard end) of the joint bell. Illustrated in FIG. 5 of US 2002/0070506 is a sealing elastic sleeve which, at one end, is positioned on an outer cylindrical surface of the tubular projection of the joint bell, covering from the outside the said slot and the end arms of the locking ring, and at the other end sealingly cooperates with an annular part fixed to the end to the hub, particularly with an insert of a sealing device of the bearing.

A scarcely efficient sealing allows water to penetrate, especially through the slot formed at the end of the joint bell, into the splined interface zone. Rust formed at the interface of the splined coupling renders the disassembling operation of the hub-bearing unit from the constant velocity joint particularly difficult, besides shortening the life of this members.

SUMMARY OF THE INVENTION

The main object of the invention is to ensure a reliable hermetic sealing for the interface zone between the constant velocity joint and the hub bearing unit. Another object of the invention is to provide a sealing device which may be easily mounted and disassembled during repeated servicing operations throughout the lifetime of the bearing and the joint. A further object of the invention is to guarantee the sealing action without adversely affecting operation of other sealing devices on the hub bearing unit.

The above and other objects and advantages, which will be better understood in the following, are achieved according to the invention by a sealing device having the features set forth in the appended claims.

BRIEF DESCRIPTION OF THE DRAWINGS

A preferred, but not limiting embodiment of the invention will now be described, reference being made to the accompanying drawings, in which:

FIG. **1** is an axial cross section view of a sealing device mounted on a constant velocity joint coupled to a hub bearing unit;

FIGS. **2-4** are views schematically showing the assembling steps of the assembly shown in FIG. **1**;

FIG. **5** is an axial cross section view of an alternate embodiment of a sealing device mounted on a constant velocity joint coupled to a hub bearing unit;

FIG. **6** is perspective view of a locking ring for the sealing device shown in FIG. **1**.

DETAILED DESCRIPTION OF THE PREFERRED EMBODIMENTS

With reference initially to FIG. **1**, a hub **10** for a driving wheel of a motor vehicle is rotatably mounted in the suspension standard **11** of the motor vehicle through a bearing unit which includes an outer stationary race **12** having a flange **13** fixed to the standard through bolts (not shown). Locked onto the hub **11** is an inner bearing race **14** that forms the inner raceway for one of the two sets of balls **15**, **16** of the bearing unit. The hub has a cylindrical surface **17** towards its axially outer end, onto which there is fixed a driving ring **18** with outer axial splines **19** for transferring the driving torque from the bell **20** of the constant velocity joint to the hub. The driving ring **18** is securely axially locked against the inner bearing race **14** by cold forming, preferably by orbital rolling, of an end edge **21** of the hub. At its axially outer side, the joint bell **20** forms a tubular projection **22** with inner axial splines **23** which couple with the outer splines **19** of the driving ring **18**.

The driving ring **18** and the joint bell **20** are axially removably joined by an elastic open securing ring **24** which is received partly in an inner circular groove **25** of the bell **20**, and partly in an outer circular groove **26** of the driving ring **18**. The locking ring **24** has two radial arms **29** at its end, with axially bent appendixes extending through a slot **27** formed at the axially outer end of the tubular projection **22** of the bell **20**. In the drawings, only one of the two arms **29** is shown.

Indicated overall at **30** is a sealing device for hermetically sealing from the outside the zone of the coupling between the constant velocity joint and the hub bearing unit. The sealing device **30** comprises a flexible sealing sleeve **31** of elastomeric material and a circumferential clamping spring **32**.

The sealing sleeve **31** has a main, substantially tubular portion **34** which is sealingly locked by means of the spring **32** around the outer cylindrical surface **33** of the tubular projection **22** of the joint. In order to facilitate the assembling and disassembling steps, the tubular portion **34** preferably has a free or non-deformed size which is greater than the outer diameter of the cylindrical surface **33**, so that the projection **22** may easily be slipped into and out of the sleeve **31**. The sealing action of the sleeve against the joint bell is ensured mechanically by the spring **32**.

At its axially outer side, the sleeve **31** has a flange **35** projecting in a radially inner direction that is clamped along its circumference between the joint bell **20** and the hub bearing unit, in this example between a radial end face **36** of the bell on the axially outer side and radial face **37** of the bearing inner race **14**. The axial clamping of the flange **35** between the two parallel surface members that are securely locked to one another in the axial direction guarantees a particularly efficient sealing action on the side of the hub bearing unit.

It will be noticed in FIG. **1** that a part of the flange **35** contacts a conventional sealing device **28**, shown schematically, which seals the gap between the bearing races **12** and **14** and which generally comprises a pair of facing annular inserts (not shown) in mutual sliding contact through one or more sealing gaskets. In order not to jeopardize the sealing effect of the device **28**, which may be countered if the relative position of its inserts should undergo accidental changes (for example following a stroke), the flange **35** should not exert an appreciable pressure against the sealing device **28**. Preferably, as shown in the example of FIG. **1**, the flange **35** should be clamped axially between a rigid essentially non deformable

element of the hub bearing unit, such as the bearing race **14** and the joint bell **20**. According to a variant of the invention shown in FIG. **5**, the flange **35** of the sealing device **30** may be clamped between the inner bearing race **14** and the driving ring **18**. In this case the flange **35** may consist of an annular disk of rigid material onto which the elastomeric sleeve **31** is vulcanized or glued.

In order to assemble the constant velocity joint with the hub bearing unit, the latter is preliminarily mounted on the suspension standard (FIG. **2**). The locking ring **24** is fitted in the groove **26** of the driving ring **18**. The end arms **29** of the locking ring **24** are then contracted together, and this elastic ring is held in this elastically contracted condition in which it is completely contained within the groove **26** of the driving ring **18**. The two end arms are held one against the other by a retainer tool indicated schematically at **40**. The sealing sleeve **31** is located around the driving ring **18** with the flange **35** resting adjacent to the face **37** of the inner bearing race **14**.

Then (FIG. **3**) the joint bell **20** is slipped telescopically with the splines **19** and **23** provided on the outside of the driving ring **18** and in the inside of the tubular projection **22** mutually engaging one another, until the axial outer end face **36** of the bell abuts against the flange **35** of the sleeve **31**, which remains axially clamped between the constant velocity joint and the hub bearing unit (FIG. **3**). As shown in FIGS. **3** and **4**, the tubular portion **34** of the sealing sleeve has a free or non deformed radial size greater than the outer diameter of the cylindrical surface **33** of the constant velocity joint bell, so as to facilitate insertion of the tubular projection **22** into the sleeve during the same assembling step of the joint with the hub bearing unit. The circumferential spring **32** is provisionally located on the outer surface of the joint bell, on a cylindrical surface **38** thereof having a diameter that is greater than that of the cylindrical surface **33** of the tubular projection. In the so reached abutting position, the inner groove **25** fainted in the tubular projection of the bell is aligned with the groove **26** formed on the outside of the driving ring **18**.

By removing the retainer tool (FIG. **4**), the arms **29** of the elastic ring are released allowing the locking ring **24** to expend and reach its operational position, shown in FIG. **1** where the ring **24** engages both the aligned grooves **25**, **26** and therefore keeps the constant velocity joint axially secured to the hub bearing unit. Finally, the spring **32** is moved along the joint bell so as to radially clamp the tubular portion **34** of the sleeve against the tubular projection **22** of the joint.

It will be appreciated that the hermetic coupling between the hub bearing unit and the constant velocity joint is ensured mechanically, on one side, by the same assembling of this two subassemblies. The flange **35** of the elastic sleeve that remains clamped guarantees hermetic sealing at the interface between the two subassemblies. The elastic sleeve covers the zone of the slots **27** of the constant velocity joint and is reliably closed by means of circumferential spring **32** which ensures mechanically the sealing action towards the axially inner side. By removing the circumferential spring to the disassemble the hub bearing unit for the constant velocity joint, the axially inner end of the sleeve is free to expend elastically and allows to easily insert the tool that brings the arms of the locking ring **24** near to one another. The constant velocity joint may thus be released and separated from the hub bearing unit without destroying the elastic sleeve.

What is claimed is:

1. A sealing arrangement between a hub bearing unit for a motor vehicle wheel and an associated constant velocity joint, the hub bearing unit comprising a rotatable hub to which a driving ring is fixed for providing torque transmission to the hub from an outer, rotatable bell member of the constant velocity joint,

the bell member having a tubular projection in telescopic relation with the driving ring, and a radial slot axially extending to an end side of the bell member facing a rotatable member of the hub beating unit,

the driving ring and the tubular projection having respective outer and inner circular grooves accommodating a spring locking ring for releasably axially securing the joint bell to the driving ring,

the locking ring having arms extending radially outwardly through the slot,

a resilient sleeve being fitted with a first end thereof on an outer surface on the tubular projection, the radial slot and the arms of the spring locking ring being covered from the outside, a second other end of the sleeve having a radially inwardly projecting annular flange sealingly cooperating with a rigid annular part secured to or integral with the wheel hub;

wherein the radially inwardly projecting flange is axially clamped against the rigid annular part.

2. A sealing arrangement according to claim **1**, wherein the flange is axially clamped between the end side of the joint bell and the rigid annular part secured to or integral with the hub.

3. A sealing arrangement according to claim **2**, wherein the flange is axially clamped between the end side of the joint bell and a radially inner bearing race secured to the hub.

4. A sealing arrangement according to claim **1**, wherein the flange is axially clamped between the driving ring and a radially inner bearing race secured to the hub.

5. A sealing arrangement according to claim **1**, wherein associated with the first end of the resilient sleeve is a circumferential spring radially and sealingly tightening the first end of the sleeve against an outer cylindrical surface of the tubular projection.

6. A sealing arrangement according to claim **5**, wherein the resilient sleeve forms a main, substantially cylindrical portion ending at said first end and having an inner diameter which in a free condition of the sleeve, non-deformed by the circumferential spring, is greater than the outer diameter of the outer cylindrical surface of the tubular projection.

* * * * *